*ARMY TM 9-2320-302-20-2
AIR FORCE TO 36A12-1C-1600-2-2

UNIT MAINTENANCE MANUAL

FOR

TRUCK, TRACTOR, LINE HAUL:
52,000 GVWR, 6 X 4, M915A3
(NSN 2320-01-432-4847) (EIC: B4L)

TRUCK, TRACTOR, LIGHT EQUIPMENT TRANSPORTER (LET):
68,000 GVWR, 6 X 6, W/WINCH, M916A3
(NSN 2320-01-488-6962) (EIC: B4P)

TRUCK, DUMP, HEAVY, CHASSIS:
68,000 GVWR, 6 X 6, 14 CU YD, ON-OFF HIGHWAY
M917A2 (NSN 3805-01-488-7442) (EIC: BPB)
M917A2 W/MCS (NSN 3805-01-488-6963) (EIC: BA4)

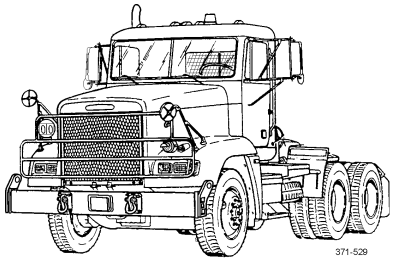

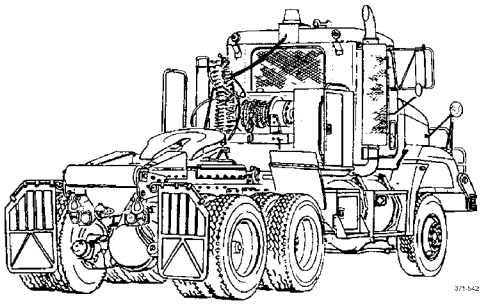

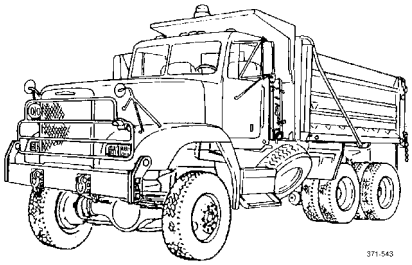

***SUPERSEDURE NOTICE** - This manual supersedes TM 9-2320-302-20, dated 28 May 2001.

DISTRIBUTION STATEMENT A - Approved for public release; distribution is unlimited.

HEADQUARTERS, DEPARTMENTS OF THE ARMY AND AIR FORCE
FEBRUARY 2006

WARNING SUMMARY

This warning summary contains general safety warnings and hazardous materials warnings that must be understood and applied during operation and maintenance of this equipment. Failure to observe these precautions could result in serious injury or death to personnel. Also included are explanations of safety and hazardous materials icons used within the technical manual.

BIOLOGICAL - abstract symbol bug shows that a material may contain bacteria or viruses that present a danger to life or health.

CHEMICAL - drops of liquid on hand shows that the material will cause burns or irritation to human skin or tissue.

EAR PROTECTION - headphones over ears shows that noise level will harm ears.

ELECTRICAL - electrical wire to arm with electricity symbol running through human body shows that shock hazard is present.

EYE PROTECTION - person with goggles shows that the material will injure the eyes.

FIRE - flame shows that a material may ignite and cause burns.

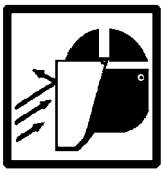

FLYING PARTICLES - arrows bouncing off face with face shield shows that particles flying through the air will harm face.

HEAVY OBJECT - human figure stooping over heavy object shows physical injury potential from improper lifting technique.

HEAVY PARTS - hand with heavy object on top shows that heavy parts can crush and harm.

HEAVY PARTS - heavy object on human figure shows that heavy parts present a danger to life or limb.

HOT AREA - hand over object radiating heat shows that part is hot and can burn.

VAPOR - human figure in a cloud shows that material vapors present a danger to life or health.

FOR INFORMATION ON FIRST AID, REFER TO FM 4-25.11.

WARNING

CARBON MONOXIDE (EXHAUST GASES) CAN KILL!

- Carbon monoxide is a colorless, odorless, deadly poison which, when breathed, deprives the body of oxygen and causes suffocation. Exposure to air containing carbon monoxide produces symptoms of headache, dizziness, loss of muscular control, apparent drowsiness, and coma. Permanent brain damage or death can result from severe exposure.
- Carbon monoxide occurs in exhaust fumes of internal combustion engines. Carbon monoxide can become dangerously concentrated under conditions of inadequate ventilation. The following precautions must be observed to ensure safety of personnel when engine of truck is operated.

1. DO NOT operate vehicle in an enclosed area unless exhaust is vented to outside atmosphere.
2. DO NOT drive truck with inspection plates or cover plates removed.
3. BE ALERT for exhaust poisoning symptoms. They are:
   - Headache
   - Dizziness
   - Sleepiness
   - Loss of muscular control
4. If you see another person with exhaust poisoning symptoms:
   - Remove person from area.
   - Expose to fresh air.
   - Keep person warm.
   - Do not permit physical exercise.
   - Administer cardiopulmonary resuscitation (CPR), if necessary.
   - Notify a medic.
5. BE AWARE. The field protective mask for nuclear-biological-chemical (NBC) protection will not protect you from carbon monoxide poisoning.

The Best Defense Against Carbon Monoxide Poisoning Is Good Ventilation!

WARNING

ADHESIVES AND SEALING COMPOUNDS

Adhesives and sealing compounds can burn easily, can give off harmful vapors, and are harmful to skin and clothing. To avoid injury or death, keep away from open fire and use in a well-ventilated area. If adhesive or sealing compound contacts skin or clothing, wash immediately with soap and water.

WARNING

AIR LINES AND FITTINGS

- DO NOT disconnect any air system lines or fittings unless vehicle engine is shut down and air system pressure is relieved. Failure to follow this warning could result in serious injury to personnel.
- Ensure that all air lines and fittings are clear of debris and excess pipe sealing compound does not enter air lines or fittings. Failure to follow this warning could result in injury to personnel and damage to equipment.
- Always wear eye protection when disconnecting air lines. Residual air will be expelled. Failure to follow this warning may result in serious eye injury.

WARNING

BATTERIES

- To avoid eye injury, eye protection is required when working around batteries. DO NOT smoke, use open flame, make sparks or create other ignition sources around batteries. If a battery is giving off gases, it can explode and cause injury to personnel. Remove all jewelry such as rings, ID tags, watches, and bracelets. If jewelry or a tool contacts a battery terminal, a direct short will result in instant heating, injury to personnel, and damage to equipment.
- Sulfuric acid contained in batteries can cause serious burns. Always wear goggles, gloves, and apron. If battery corrosion or electrolyte makes contact with skin, eyes or clothing, take immediate action to stop the corrosive burning effects. Failure to follow these procedures may result in death or serious injury to personnel.
    1. **Eyes.** Flush with cold water for no less than 15 minutes and seek medical attention immediately.
    2. **Skin.** Flush with large amounts of cold water until all acid is removed. Seek medical attention as required.
    3. **Internal.** If corrosion or electrolyte is ingested, drink large amounts of water or milk. Follow with milk of magnesia, beaten egg or vegetable oil. Seek medical attention immediately.
    4. **Clothing/Equipment.** Wash area with large amounts of cold water. Neutralize acid with baking soda or household ammonia.

WARNING

BRAKES

- When caging brakes, block wheels to keep truck from moving when brakes are released. Failure to follow this warning may result in death or injury to personnel or damage to equipment.
- Brake chamber contains spring under great pressure. To prevent personnel injury, never work directly behind chamber. If caging bolt will not engage properly, spring may be broken.
- DO NOT remove clamp ring around spring brake chamber. It is under tension and can cause personnel injury if released.
- When spring brakes are applied, vehicle will stop quickly which could result in injury to personnel. Also, vehicle cannot be driven again until malfunction is repaired and enough air supply is present for operation of service brakes.
- Brakeshoe linings and inside drum friction surface must be free of all oil/grease and other contaminants prior to assembly to ensure maximum braking capability. Oil/grease and other contaminants may compromise braking that could lead to a serious accident resulting in injury and/or death.

WARNING

CLEANING

Improper cleaning methods and use of unauthorized cleaning liquids or solvents can injure personnel and damage equipment.

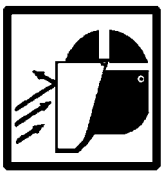

WARNING

COMPRESSED AIR

Compressed air used for cleaning or drying purposes, or for clearing restrictions, should never exceed 30 psi (207 kPa). Wear protective clothing (goggles/shield, gloves, etc.) and use caution to avoid injury to personnel.

WARNING

DIESEL FUEL HANDLING

- DO NOT perform fuel system checks, inspections or maintenance while smoking or near fire, flames or sparks. Fuel may ignite, causing injury or death to personnel and damage to vehicle.
- Fuel vapors are toxic. Avoid prolonged exposure or breathing of fumes. Work in a well-ventilated area. Failure to follow this warning could result in serious injury to personnel.
- Personnel must wear fuel-resistant gloves when handling fuels. If exposed to fuel, promptly wash exposed skin and change fuel-soaked clothing.

WARNING

ETHER QUICK-START SYSTEM

Ether fuel is extremely flammable and toxic. DO NOT smoke and make sure you are in a well-ventilated area away from heat, open flames or sparks. Wear goggles and chemical resistant gloves. Avoid contact with skin and eyes and avoid breathing vapors. If fluid enters or fumes irritate the eyes, wash immediately with large quantities of clean water for 15 minutes. Seek medical attention immediately if ether is inhaled or causes eye irritation. Failure to follow this warning may cause death or serious injury to personnel.

WARNING

FIRE EXTINGUISHER

Discharging large quantities of dry chemical fire extinguisher in cab may result in temporary breathing difficulty during and immediately after the discharge event. If at all possible, discharge fire extinguisher from outside the cab. Avoid unnecessary contact during use and cleanup. Contact local medical personnel to determine necessary personal protective equipment to wear during cleanup.

WARNING

HAZARDOUS WASTE DISPOSAL

When servicing this vehicle, performing maintenance, or disposing of materials such as engine coolant, transmission fluid, lubricants, battery acids or batteries, and CARC paint, consult your unit/local hazardous waste disposal center or safety office for local regulatory guidance. If further information is needed, please contact The Army Environmental Hotline at 1-800-872-3845.

WARNING

HEARING PROTECTION

Hearing protection is required when operating vehicle at more than 40 mph (64 kph) with windows open for an extended period of time. Hearing protection is also required when personnel are within 5.2 ft (1.57 m) of vehicle when operating at low engine idle (600 rpm) and within 16.5 ft (5 m) of vehicle when operating at high idle (1600 rpm). Failure to follow this warning may result in hearing damage.

WARNING

NBC EXPOSURE

If NBC exposure is suspected, all air cleaner media should be handled by personnel wearing protective equipment. Consult your NBC Officer or NBC NCO for appropriate handling or disposal procedures.

To order this NBC decal use:

National Stock Number (NSN) - 7690-01-114-3702
Part Number (PN) - 12296626
Commercial and Government Entity Code (CAGEC) - 19207

WARNING

PRESSURIZED COOLING SYSTEM

DO NOT remove radiator cap or drain antifreeze unless engine is cold. Remove radiator cap in two steps. First, place a thick cloth over cap and slowly turn cap left to first stop. Pause and allow pressure to escape. Turn cap further left until it can be removed. This is a pressurized cooling system and escaping steam, hot water or coolant will cause serious burns.

WARNING

R-134A REFRIGERANT

- Liquid refrigerant, when exposed to air, quickly evaporates and will freeze skin or eye tissue. Use care to prevent refrigerant from touching your skin or eyes. Serious injury or blindness may result if you come in contact with refrigerant.
- Refrigerant R-134a air conditioning systems should not be pressure tested or leak tested with compressed air. Combustible mixtures of air and R-134a may form, resulting in a fire or explosion, which could cause personnel injury.
- DO NOT work in an area where refrigerant may contact an open flame or burning material such as a cigarette. When refrigerant contacts extreme heat, refrigerant breaks down into poisonous phosgene gas which, if breathed, causes severe respiratory irritation. DO NOT breathe fumes from an open flame leak detector.

WARNING

SLAVE STARTING

- When slave starting truck, use NATO slave cable that DOES NOT have loose or missing insulation.
- DO NOT proceed if suitable cable is not available.
- DO NOT use civilian-type jumper cables.
- Failure to follow this warning may result in injury.

WARNING

TIRE CHANGING

Whenever wheel lug nuts require tightening or a wheel has been removed and replaced, lug nuts must be tightened to the required torque. Failure to follow this warning may result in serious injury to personnel and damage to equipment.

WARNING

TOWING

Brakes will be released when air is applied to a disabled vehicle. DO NOT connect air lines to a disabled vehicle without blocking wheels and connecting tow bar between vehicles. Failure to follow this warning could result in death or injury to personnel and damage to equipment.

WARNING

WINCH

Always wear heavy gloves when handling winch cables. Never allow cable to run through hands; frayed cables can cut.

WARNING

WORK SAFETY

- Hydraulic jack is intended only for lifting truck, not for supporting vehicle to perform maintenance. DO NOT get under truck after it is raised unless it is properly supported with blocks or jackstands. Failure to observe this warning may result in death or injury to personnel.

- Use extreme caution when handling heavy parts. Provide adequate support and use assistance during procedure. Ensure that any lifting device used is in good condition and of suitable load capacity. Keep clear of heavy parts supported only by lifting device. Failure to follow this warning may result in death or injury to personnel.

- Improper use of lifting equipment and improper attachment of cables to vehicle can result in serious personnel injury and equipment damage. Observe all standard rules of safety.

- ALWAYS install hood prop after opening hood. Failure to follow this warning could result in severe injury to personnel.

ARMY TM 9-2320-302-20-2
AIR FORCE TO 36A12-1C-1600-2-2

CHANGE
No. 1

HEADQUARTERS
DEPARTMENTS OF THE ARMY
AND AIR FORCE
WASHINGTON, D.C., 10 JANUARY 2011

TECHNICAL MANUAL

UNIT MAINTENANCE MANUAL

FOR

TRUCK, TRACTOR, LINE HAUL:
52,000 GVWR, 6 x 4, M915A3
(NSN 2320-01-432-4847) (EIC: B4L)

TRUCK, TRACTOR, LIGHT EQUIPMENT
TRANSPORTER (LET):
68,000 GVWR, 6 x 6, W/WINCH, M916A3
(NSN 2320-01-488-6962) (EIC: B4P)

TRUCK, DUMP, HEAVY CHASSIS:
68,000 GVWR, 6 x 6, 14 CU YD, ON-OFF HIGHWAY
M917A2 (NSN 3805-01-488-7442) (EIC: BPB)
M917A2 W/MCS (NSN 3805-01-488-6963) (EIC: BA4)

TM 9-2320-302-20-2, 24 February 2006, is updated as follows:

1. File this sheet in front of the publication for reference purposes.
2. New or updated material is indicated by a vertical bar in the outer margin of the page and by a vertical bar adjacent to the art.
3. Remove old pages and insert new pages as indicated below:

Remove Pages	Insert Pages
Front Cover	Front Cover
a thru j	a thru j
A/(B Blank)	A/(B Blank)
i thru xii	i thru xii
Index-1 thru Index 16	Index-1 thru Index-16
DA Form 2028 Sample	DA Form 2028 Sample
DA Form 2028 (three copies)	DA Form 2028 (three copies)

4. Replace the following work packages with their revised version.

Work Package Number
WP 0023 00
WP 0138 00
WP 0143 00
WP 0145 00
WP 0146 00
WP 0152 00
WP 0157 00
WP 0226 00
WP 0227 00
WP 0233 00
WP 0257 00
WP 0258 00
WP 0299 00
WP 0302 00

5. Add the following new work packages:

Work Package Number
WP 0027 01
WP 0143 01
WP 0152 01
WP 0231 01

By Order of the Secretary of the Army:

GEORGE W. CASEY, JR.
General, United States Army
Chief of Staff

Official:

JOYCE E. MORROW
Administrative Assistant to the
Secretary of the Army
1035401

By Order of the Secretary of the Air Force:

DUNCAN J. MCNABB
General, United States Air Force
Vice Chief of Staff

Official:
BRUCE CARLSON
General, United States Air Force
Commander, Air Force Materiel Command

DISTRIBUTION:

To be distributed in accordance with the initial distribution requirements for IDN 381147 TM 9-2320-302-20-2.

LIST OF EFFECTIVE PAGES/WORK PACKAGES

Dates of issue for original and change pages/work packages are:

Original	24 February 2006
Change 1	10 January 2011

TOTAL NUMBER OF VOLUMES IS 3. TOTAL NUMBER OF PAGES FOR FRONT AND REAR MATTER IS 104 AND TOTAL NUMBER OF WORK PACKAGES IS 309 CONSISTING OF THE FOLLOWING:

Page/WP No.	*Change No.	Page/WP No.	*Change No.
Front Cover (Back Blank)	1	WP 0226 00 and 0227 00	1
a to i (j blank)	1	WP 0228 00 to 0231 00	0
i to xi (xii Blank)	1	WP 0231 01	1
WP 0021 00 to 0022 00	0	WP 0232 00	0
WP 0023 00	1	WP 0233 00	1
WP 0024 00 to WP 0027 00	0	WP 0234 00 to 0256 00	0
WP 0027 01	1	WP 0257 00 and 0258 00	1
WP 0028 00 to 0137 00	0	WP 0259 00 to 0298 00	0
WP 0138 00	1	WP 0299 00	1
WP 0139 00 to 0143 00	0	WP 0300 00 and 0301 00	0
WP 0143 01	1	WP 0302 00	1
WP 0144 00	0	WP 0303 00 to 0306 00	0
WP 0145 00 and 0146 00	1	Index-1 thru Index-16	1
WP 0147 00 to 0151 00	0	Foldouts FO-1 thru FO-14	0
WP 0152 00	1	Authentication Page (Back Blank)	0
WP 0152 01	1	Sample DA Form 2028	1
WP 0153 00 to 0156 00	0	DA Form 2028	1
WP 0157 00	1	Metric Conversion Chart	0
WP 0158 00 to 0225 00	0	Back Cover	0

*** Zero in this column indicates an original page or work package.**

*ARMY TM 9-2320-302-20-2
AIR FORCE TO 36A12-1C-1600-2-2

HEADQUARTERS
DEPARTMENTS OF THE ARMY
AND AIR FORCE
WASHINGTON, D.C., 24 February 2006

UNIT MAINTENANCE MANUAL

FOR

TRUCK, TRACTOR, LINE HAUL:
52,000 GVWR, 6 X 4, M915A3
(NSN 2320-01-432-4847) (EIC: B4L)

TRUCK, TRACTOR, LIGHT EQUIPMENT
TRANSPORTER (LET):
68,000 GVWR, 6 X 6, W/WINCH, M916A3
(NSN 2320-01-488-6962) (EIC: B4P)

TRUCK, DUMP, HEAVY, CHASSIS:
68,000 GVWR, 6 X 6, 14 CU YD, ON-OFF HIGHWAY
M917A2 (NSN 3805-01-488-7442) (EIC: BPB)
M917A2 W/MCS (NSN 3805-01-488-6963) (EIC: BA4)

REPORTING ERRORS AND RECOMMENDING IMPROVEMENTS

You can help improve this publication. If you find any errors, or if you would like to recommend any improvements to the procedures in this publication, please let us know. The preferred method is to:

(A) Army - Submit your DA Form 2028 (Recommended Changes to Publications and Blank Forms) through the Internet, on the Army Electronic Product Support (AEPS) website. The Internet address is https://aeps.ria.army.mil. The DA Form 2028 is located under the Public Applications section in the AEPS Public Home Page. Fill out the form and click on SUBMIT. Using this form on the AEPS will enable us to respond quicker to your comments and better manage the DA Form 2028 program. You may also mail, e-mail, or fax your comments or DA Form 2028 directly to the U.S. Army TACOM Life Cycle Management Command. The postal mail address is U.S. Army TACOM Life Cycle Management Command, ATTN: AMSTA-LC-LMPP/TECH PUBS, 6501 E. 11 Mile Road, Warren, MI 48397-5000. The e-mail address is tacomlcmc.daform2028@us.army.mil. The fax number is DSN 793-0726 or Commercial (309) 782-0726.

(F) Air Force - By Air Force AFTO Form 22 directly to 580 CBSS/GBLCA, ATTN: M-Series IPT, 460 Richard Ray Blvd., Ste. 200, Robins AFB, GA 31098-1813. You may also send in your recommended changes via electronic mail or by fax. Our fax number is DSN 472-1849 and Commercial 478-222-1849. Our e-mail address is 580CBSS.mseriesipt@robins.af.mil. A reply will be furnished to you.

***SUPERSEDURE NOTICE** - This manual supersedes TM 9-2320-302-20, dated 28 May 2001.

DISTRIBUTION STATEMENT A - Approved for public release; distribution is unlimited.

Table of Contents

Page Number

VOLUME II

Table of Contents - Continued

Page Number

CHAPTER 3 UNIT MAINTENANCE INSTRUCTIONS

Table of Contents - Continued

Table of Contents - Continued

Page Number

Electrical - Continued

Table of Contents - Continued

Table of Contents - Continued

Table of Contents - Continued

Table of Contents - Continued

Table of Contents - Continued

HOW TO USE THIS MANUAL

INTRODUCTION

1. This manual is designed to help you maintain the M915 Family of Vehicles.
2. This manual covers the following models:
   a. M915A3 Tractor Truck (Old Model)
   b. M915A3 Tractor Truck (New Model)
   c. M916A3 Tractor Truck
   d. M917A2 Dump Truck
   e. M917A2 w/MCS Dump Truck
3. The terms M915A3 Old Model and M915A3 New Model will be used when model differences must be identified.
   a. M915A3 Old Model = Serial #'s up to H77205 and vehicle J64175 only.
   b. M915A3 New Model = Serial #'s starting with J21548.

FEATURES OF THIS MANUAL:

- A Table of Contents is provided at the beginning of this manual.
- WARNINGs, CAUTIONs, NOTEs, subject headings, and other important information are highlighted in **BOLD** print as a visual aid.

WARNING

A WARNING indicates a hazard which results in death or serious injury.

CAUTION

A CAUTION is a reminder of safety practices or directs attention to usage practices that may result in damage to equipment.

NOTE

A NOTE is a statement containing information that will make the procedures easier to perform.

- Statements and words of particular importance are printed in CAPITAL LETTERS to create emphasis.
- Instructions are located with illustrations that show the specific task on which the mechanic is working.
- Numbers located at lower right corner of art (e.g. 342-001, 342-002, 371-001, 371-002, etc.) are art control numbers and are used for tracking purposes. Disregard these numbers.
- Dashed leader lines used in illustrations indicate that called out items are not visible (i.e. they are located within the structure). Dashed leader lines in the Lubrication Chart indicate that lubrication is required on BOTH sides of the equipment.
- Technical instructions include metric units in addition to standard units. A metric conversion chart is provided on the inside back cover.
- An alphabetical index is provided at the end of the manual to assist in locating information not readily found in the Table of Contents.

FOLLOW THESE GUIDELINES WHEN YOU USE THIS MANUAL:

- Read through this manual and become familiar with its contents before attempting to maintain the vehicle.
- A Warning Summary is provided at the beginning of this manual and should be read before attempting to maintain the vehicle.

CHAPTER 3
UNIT MAINTENANCE INSTRUCTIONS

SERVICE UPON RECEIPT 0021 00

NOTE

Refer to TM 5-3805-264-14&P for *Service Upon Receipt* for M917A2 and M917A2 w/MCS Dump Truck Body.

GENERAL

1. When a new, used or reconditioned M915 Family of Vehicles is first received, determine whether it has been properly prepared for service and is in condition to perform its mission.
2. Follow the inspection and servicing instructions that follow.

INSPECTION INSTRUCTIONS

1. Read and follow all precautions and instructions on DD Form 1397.
2. Remove all packing and shipping material, such as tape, tie downs, protective covers, and shipping seals.
3. Inspect equipment for any damage incurred during shipment. Check if equipment has been modified.
4. Check equipment against packing slip to ensure that shipment is complete. Report any discrepancies on SF Form 364.
5. Remove all Basic Issue Item (BII), Additional Authorization List (AAL), and Components of End Item (COEI) equipment and store in accordance with TM 9-2320-302-10.

SERVICING INSTRUCTIONS

1. Service the vehicle in accordance with TM 9-2320-302-10 and Unit PMCS (WP 0023 00). Schedule the next PMCS on DD Form 314.
2. Refer to TM 9-2320-302-10 and perform functional checks of all major vehicle systems.

END OF WORK PACKAGE

UNIT PREVENTIVE MAINTENANCE CHECKS AND SERVICES (PMCS) INTRODUCTION

0022 00

GENERAL

1. To ensure that the M915 Family of Vehicles are ready for operation at all times, they must be lubricated and inspected on a regular basis so that defects may be found before they result in serious damage, equipment failure or injury to personnel.
2. The *KEY* in this work package lists the types, amounts, and temperature ranges of the lubricants required for specified intervals.
3. Lubrication Charts at the end of this work package show all lubrication points.
4. Table 1 in WP 0023 00 contains systematic instructions on lubrications, inspections, adjustments, and corrections to be performed by Unit Maintenance to keep the tractor in good operating condition and ready for its primary mission.
5. Tables 2 and 3 at the end of WP 0023 00 list PMCS mandatory replacement parts, by interval.
6. For information on Corrosion Prevention and Control (CPC), refer to WP 0001 00.

EXPLANATION OF TABLE ENTRIES

1. **Item Number (Item No.) Column.** Numbers in this column are for reference. When completing DA Form 2404 or DA Form 5988-E (*Equipment Inspection and Maintenance Worksheet*), include the item number for the check/service indicating a fault. Item numbers also appear in the order you must perform checks and services for the interval listed.
2. **Interval Column.** This column tells you when you must perform the procedure in the procedure column. Intervals are based on calender dates or hours.
   a. *Quarterly* procedures must be done every three months.
   b. *Semiannual* procedures must be done once every six months.
   c. *Annual* procedures must be done once each year.
3. **Man-Hours Column.** This column indicates man-hours required to complete prescribed lubrication service.
4. **Item to be Checked or Serviced Column.** This column identifies the item to be checked or serviced.

NOTE

The WARNINGs and CAUTIONs appearing in your PMCS table should always be observed. WARNINGs and CAUTIONs appear before applicable procedures. These WARNINGs and CAUTIONs must be observed to prevent serious injury to yourself and others or to prevent your equipment from being damaged.

5. **Procedures Column.** This column gives the procedure you must perform to check or service the item listed in the Item to Check/Service column, to know if the equipment is ready or available for its intended mission or for operation. You must perform the procedure at the time stated in the interval column.
6. **Equipment Not Ready/Available If: Column.** Information in this column tells you what fault will keep your equipment from being capable of performing its primary mission. If you perform check and service procedures that show faults listed in this column, the equipment is not mission-capable. Follow standard operating procedures for maintaining the equipment or reporting equipment failure.

GENERAL LUBRICATION PROCEDURES

NOTE

- Lubrication instructions contained in this PMCS are mandatory.
- Refer to TM 9-2320-302-10 for Operator Maintenance level lubrication.
- Dashed leader lines used in illustrations of lubrication points indicate that lubrication is required on both sides of the equipment.

GENERAL LUBRICATION PROCEDURES - CONTINUED

1. Recommended intervals are based on normal conditions of operation, temperature, and humidity. When operating under extreme conditions, such as high or low temperatures or exposure to sand or dust, lubricants should always be changed more frequently. Lubricants that have become contaminated will be changed regardless of interval. When in doubt, notify your supervisor.
2. Keep all lubricants in a closed container and store in a clean, dry place away from extreme heat. Keep container covers clean and do not allow dust, dirt or other foreign material to mix with lubricants. Keep all lubrication equipment clean and ready for use.
3. Maintain a good record of all lubrication performed and report any problem noted during lubrication. Refer to DA Pam 738-750 for maintenance forms and procedures to record and report any findings.
4. Keep all external parts of equipment not requiring lubrication free of lubricants. Before lubrication, wipe lubrication fittings with a clean rag (Item 31, WP 0305 00) and detergent (Item 14, WP 0305 00). After lubrication, wipe off excess oil or grease to prevent accumulation of foreign matter.
5. Refer to FM 9-207 for lubrication instructions in cold weather.
6. Refer to AR 70-12 for use of standardized fuels and lubricants.
7. Engine and transmission oil filters shall be changed when:
   a. they are known to be contaminated or clogged;
   b. at prescribed hardtime intervals.
8. Engine oil and transmission fluid must be sampled initially at or 90 days of operation as prescribed by DA Pam 738-750.
9. For equipment under manufacturer’s warranty, hardtime oil service intervals shall be followed. Intervals shall be shortened if lubricants are known to be contaminated or if operation is under adverse conditions (i.e., longer-than-usual operating hours, extended idling periods or extreme dust).

GENERAL PMCS PROCEDURES

1. Always perform PMCS in the same order so it gets to be a habit. Once you’ve had some practice, you’ll spot anything wrong in a hurry. If any deficiency is discovered, perform the appropriate troubleshooting task in Chapter 2 of this manual. If any component or system is not serviceable, or if the given service does not correct the deficiency, notify your supervisor.
2. Before performing preventive maintenance, read all the checks required for the applicable interval and prepare all tools needed to make all checks. Have several clean rags (Item 31, WP 0305 00) handy. Perform ALL inspections at the applicable interval.
   a. **Keep It Clean.** Dirt, grease, oil, and debris get in the way and may cover up a serious problem. Clean as you work and as needed. Use detergent (Item 14, WP 0305 00) and water when you clean.
   b. **Rust and Corrosion.** Check metal parts for rust and corrosion. If any bare metal or corrosion exists, clean and apply a light coat of lubricating oil (Item 22, WP 0305 00). Report it to your supervisor.
   c. **Bolts, Nuts, and Screws.** Check bolts, nuts, and screws for obvious looseness, missing, bent or broken condition. You can’t try them all with a tool, but look for chipped paint, bare metal or rust around bolt heads. If you find one you think is loose, tighten it.
   d. **Welds.** Look for loose or chipped paint, rust or gaps where parts are welded together. If you find a bad weld, report it to your supervisor.
   e. **Electric Wires and Connectors.** Look for cracked or broken insulation, bare wires, and loose or broken connectors. Tighten loose connectors and ensure that the wires are in good condition.

GENERAL PMCS PROCEDURES - CONTINUED

f. **Hydraulic Hoses and Lines.** Look for wear, damage, and signs of leaks. Ensure that clamps and fittings are tight. Wet spots indicate leaks, but a stain around a fitting or connector can also mean a leak. If a leak comes from a loose fitting or connector, tighten it. If something is broken or worn out, correct it if authorized by the Maintenance Allocation Chart (WP 0304 00). If not authorized, notify your supervisor.

g. **Fluid Leakage.** It is necessary for you to know how fluid leakage affects the status of your truck. The following are definitions of the types/classes of leakage you need to know to be able to determine the status of your truck. Learn and be familiar with them, and remember - when in doubt, notify your supervisor.

Leakage Definitions For PMCS

Class I	Seepage of fluid (as indicated by wetness or discoloration) not great enough to form drops.
Class II	Leakage of fluid great enough to form drops, but not enough to cause drops to drip from item being checked/inspected.
Class III	Leakage of fluid great enough to form drops that fall from item being checked/inspected.

CAUTION

Operation is allowable with Class I and Class II leakage. WHEN IN DOUBT, NOTIFY YOUR SUPERVISOR. When operating with Class I or Class II leaks, check fluid levels more frequently. Class III leaks must be reported immediately to your supervisor. Failure to do this will result in damage to vehicle and/or components.

PMCS INITIAL SETUP

1. **General.**
   a. This paragraph lists tools, materials, and personnel required for PMCS and lubrication.
   b. Mandatory replacement parts for PMCS and lubrication are listed after Unit PMCS, Tables 2 and 3, WP 0023 00.
2. **Tools.**
   a. Common no. 1 shop set
   b. General mechanic’s tool kit
3. **Materials.**
   a. Antifreeze
   b. Detergent
   c. GAA grease
   d. Lubricating oil, OE/HDO 10
   e. Lubricating oil, OE/HDO 40
   f. Lubricating oil, OE/HDO 15/40
   g. Lubricating oil, OE/HDO 30
   h. Lubricating oil, OEA
   i. Lubricating oil, GO 85/140
   j. Lubricating oil, GO 80/90
   k. Lubricating oil, GO 75
   l. Rags

PMCS INITIAL SETUP - CONTINUED

4. **Personnel.**
   a. Driver/Operator
   b. Unit Maintenance Mechanic

LUBRICANT/ COMPONENT	REFILL CAPACITY	EXPECTED TEMPERATURES*		
		+6°F TO +122°F (-14°C TO +50°C)	-4°F TO +50°F (-20°C TO +10°C)	-67°F TO +32°F (-55°C TO 0°C)
OE/HDO (MIL-L-2104) Lubricating Oil, ICE, Tactical				
OEA (MIL-L-46167) Lubricating Oil, ICE, Arctic				
Engine Crankcase w/Filters	41 Qt (38.8 l)	See Chart A		
Power Steering Reservoir	2 Qt (1.9 l)	See Chart A		
Transfer Case (M916A3, M917A2)	3.5 Qt (3.3 l)	See Chart F		
Transmission	51 Qt (48 l) (M915A3) 53 Qt (49.3 L) (M916A3, M917A2)	See Chart B		
Winch Reservoir (M916A3)	4.2 Gal (15.9 l)	See Chart E		
GO (MIL-PRF-2105) Lubricating Oil, Gear, Multipurpose				
Front Axle Wheel Bearings (M915A3)	As Reqd	See Chart C		
Rear Axle Differential, Forward-rear	13 Qt (12.3 l) (M915A3) 22 Qt (20.8 L) (M916A3, M917A2)	See Chart C		

LUBRICANT/ COMPONENT	REFILL CAPACITY	EXPECTED TEMPERATURES*		
		+6°F TO +122°F (-14°C TO +50°C)	-4°F TO +50°F (-20°C TO +10°C)	-67°F TO +32°F (-55°C TO 0°C)
Rear Axle Differential, Rear-rear	14.5 Qt (13.7 l) (M915A3) 23 Qt (21.7 l) (M916A3, M917A2)	See Chart C		
Winch Drum	5 Qt (4.7 l)	See Chart C		
GAA (MIL-G-10924) Grease, Automotive and Artillery	As Reqd	All Temperatures		
Fifth Wheel (M916A3)	As Reqd	All Temperatures		
Winch Cable (M916A3)	As Reqd	All Temperatures		
ANTIFREEZE (MIL-A-46153) Ethylene Glycol, Inhibited, Heavy Duty				
ANTIFREEZE (MIL-A-11755) Ethylene Glycol, Arctic Grade				
Engine Radiator	65 Qt (61.5 l)	See Chart D		
* For arctic operation, refer to FM 9-207				

Table 1. Chart A - Engine and Power Steering Reservoir.

Lubricant	EXPECTED TEMPERATURES																			
	°F	-70	-60	-50	-40	-30	-20	-10	0	+10	+20	+30	+40	+50	+60	+70	+80	+90	+100	+120
	°C	-57	-51	-46	-40	-34	-29	-23	-18	-12	-7	-1	+4	+10	+16	+21	+27	+32	+38	+49
OE/HDO (MIL-L-2104)	Lubricating Oil, ICE, Tactical																			
OEA (MIL-L-46167)	Lubricating Oil, ICE, Arctic																			
OE/HDO-15/40 (0-1236)																				
OE/HDO-10 * (0-237)																				
OE/HDO-30 (0-238)																				
OE/HDO-40 (N/A)																				
OEA * (0-183)																				

*If OEA lubricant is required to meet the low expected-temperature range, OEA lubricant is to be used in lieu of OE/HDO-10 lubricant for all expected temperatures where OE/HDO-10 is specified.

Table 2. Chart B - Transmission.

Lubricant	EXPECTED TEMPERATURES																			
	°F	-70	-60	-50	-40	-30	-20	-10	0	+10	+20	+30	+40	+50	+60	+70	+80	+90	+100	+120
	°C	-57	-51	-46	-40	-34	-29	-23	-18	-12	-7	-1	+4	+10	+16	+21	+27	+32	+38	+49
OE/HDO (MIL-L-2104)	Lubricating Oil, ICE, Tactical																			
OEA (MIL-L-46167)	Lubricating Oil, ICE, Arctic																			
OE/HDO-15/40 (0-1236)																				
OE/HDO-10 * (0-237)																				
OEA * (0-183)																				

*If OEA lubricant is required to meet the low expected-temperature range, OEA lubricant is to be used in lieu of OE/HDO-15/40 lubricant for all expected temperatures where OE/HDO-10 and OE/HDO-15/40 are specified.

Table 3. Chart C - Front Axle Wheel Bearings, Axle Differentials and Winch Drum (M916A3).

Lubricant	EXPECTED TEMPERATURES																			
	°F	-70	-60	-50	-40	-30	-20	-10	0	+10	+20	+30	+40	+50	+60	+70	+80	+90	+100	+120
	°C	-57	-51	-46	-40	-34	-29	-23	-18	-12	-7	-1	+4	+10	+16	+21	+27	+32	+38	+49
GO (MIL-PRF-2105)	Lubricating Oil, Gear, Multipurpose																			
GO-75 (0-186)																				
GO-80/90 (0-226)																				
GO-85/140 (0-228)																				

Table 4. Chart D - Antifreeze.

Lubricant	EXPECTED TEMPERATURES																			
	°F	-90	-80	-70	-60	-50	-40	-30	-20	-10	0	+10	+20	+30	+40	+50	+60	+70	+80	+90
	°C	-68	-62	-57	-51	-46	-40	-34	-29	-23	-18	-12	-7	-1	+4	+10	+16	+21	+27	+32
MIL-A-46153	Antifreeze, Ethylene Glycol, Inhibited, Heavy Duty																			
MIL-A-11755	Antifreeze, Arctic Grade																			
MIL-A-46153																				
MIL-A-11755																				

Table 5. Chart E - Winch Reservoir (M916A3).

Lubricant	EXPECTED TEMPERATURES																			
	°F	-70	-60	-50	-40	-30	-20	-10	0	+10	+20	+30	+40	+50	+60	+70	+80	+90	+100	+120
	°C	-57	-51	-46	-40	-34	-29	-23	-18	-12	-7	-1	+4	+10	+16	+21	+27	+32	+38	+49
OE/HDO (MIL-L-2104)	Lubricating Oil, ICE, Tactical																			
OEA (MIL-L-46167)	Lubricating Oil, ICE, Arctic																			
OE/HDO-10* (0 - 237)																				
OEA * (0 - 183)																				

*If OEA lubricant is required to meet the low expected-temperature range, OEA lubricant is to be used in lieu of OE/HDO-10 lubricant for all expected temperatures where OE/HDO-10 is specified.

Table 6. Chart F - Transfer Case (M916A3 and M917A2).

	EXPECTED TEMPERATURES																			
	°F	-70	-60	-50	-40	-30	-20	-10	0	+10	+20	+30	+40	+50	+60	+70	+80	+90	+100	+120
Lubricant	°C	-57	-51	-46	-40	-34	-29	-23	-18	-12	-7	-1	+4	+10	+16	+21	+27	+32	+38	+49
OE/HDO (MIL-L-2104)	Lubricating Oil, ICE, Tactical																			
OEA (MIL-L-46167)	Lubricating Oil, ICE, Arctic																			
OE/HDO-40 (N/A)																				
OEA * (0 - 183)																				
*If OEA lubricant is required to meet the low expected-temperature range, OEA lubricant is to be used in lieu of OE/HDO-10 lubricant for all expected temperatures where OE/HDO-10 is specified.																				

END OF WORK PACKAGE

Table 1. Unit Preventive Maintenance Checks and Services (PMCS) for the M915 Family of Vehicles.

ITEM NO.	INTERVAL	MAN-HOURS	LOCATION ITEM TO CHECK/ SERVICE	PROCEDURE	NOT FULLY MISSION CAPABLE IF:
				WARNING Unless otherwise specified, perform all lubrication and preventive maintenance checks and services with truck on level ground, transmission in N (Neutral), parking brake applied, and engine off. Failure to follow this warning may result in personnel injury. **NOTE** • Perform all operator PMCS, as appropriate, while performing road test (TM 9-2320-302-10). Drive at least 5 mi (8 km) to give enough time to detect malfunctions. • For PMCS and lubrication of M917A2/M917A2 w/MCS Dump Truck Body, refer to TM 5-3805-264-14&P.	
1	**Quarterly**	**0.2**	**Rear of Vehicle, Fifth Wheel (M916A3)**	Locate and lubricate 4 grease fittings on underside of fifth wheel plate (1) and 12 grease fittings on slide bracket and base (2) with grease (Item 18, WP 0305 00).	

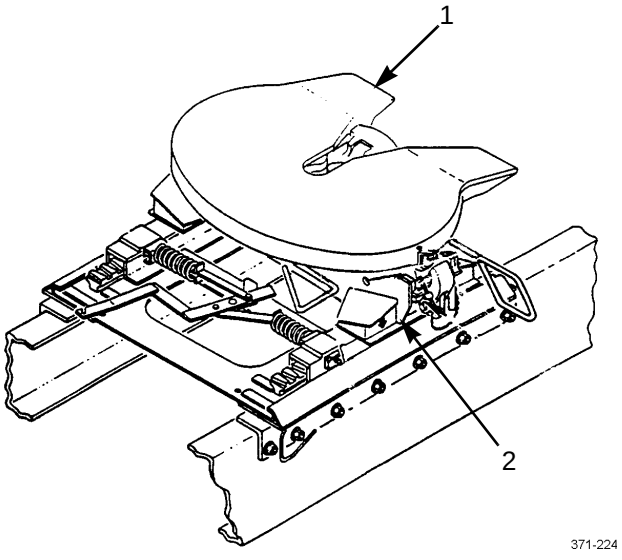

Table 1. Unit Preventive Maintenance Checks and Services (PMCS) for the M915 Family of Vehicles - Continued.

ITEM NO.	INTERVAL	MAN-HOURS	LOCATION ITEM TO CHECK/ SERVICE	PROCEDURE	NOT FULLY MISSION CAPABLE IF:
2	**Quarterly**	**0.1**	**Rear of Vehicle, Pintle Hook**	a. Lubricate three pintle hook grease fittings (3) with grease (Item 18, WP 0305 00). b. Check pintle hook (4) for proper operation. Ensure that mounting hardware is tight.	
				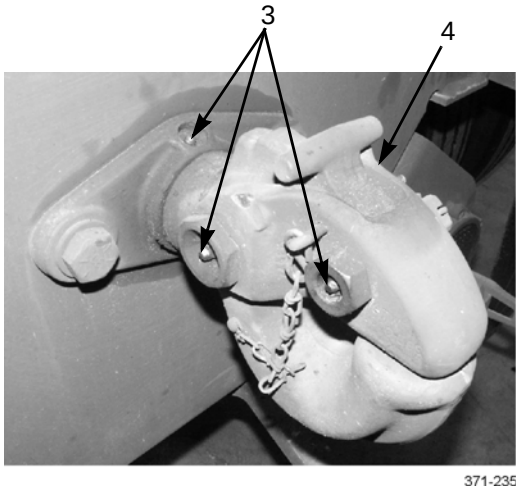	
3	**Semi-annual**		**Road Test, Starter**	While starting vehicle, listen for unusual noises and difficult cranking of starter.	
4	**Semi-annual**		**Road Test, Engine and Engine Compartment**	a. Listen for unusual noises, hesitation, and varying idle speed. Observe accelerator response. b. Ensure that engine does not exceed maximum governed speed (2100 rpm). c. Check instrument panel for proper operation of switches, gages, and indicator and warning lights (TM 9-2320-302-10).	
				NOTE Refer to TM 9-2320-302-10 for operation of brake components.	
5	**Semi-annual**		**Road Test, Brakes**	a. Test braking response to brake pedal. Response should be immediate.	

Table 1. Unit Preventive Maintenance Checks and Services (PMCS) for the M915 Family of Vehicles - Continued.

ITEM NO.	INTERVAL	MAN-HOURS	LOCATION / ITEM TO CHECK/ SERVICE	PROCEDURE	NOT FULLY MISSION CAPABLE IF:
5 (Con't)	**Semi-annual**		**Road Test, Brakes**	**NOTE** Use a ground guide for step b. b. With vehicle on level ground and parking brake applied, attempt to move vehicle forward. Have ground guide check for a rolling wheel that would indicate a broken spring in brake chamber. If a broken spring is suspected, perform inspection procedure (WP 0182 00). c. At approximately 30 mph (48 kph), apply brake pedal. Vehicle should stop smoothly without noticeable side pull or chatter. d. After stopping vehicle, with transmission in gear, release brake pedal. Wheel brake release should be immediate. e. With vehicle on downgrade and transmission in N (Neutral), set parking brake. Vehicle should not move. f. While vehicle is moving, engage engine Jake brake and check operation in all switch positions (2, 4, and 6 cylinders braking power). Ensure that vehicle speed drops in each position, with maximum braking power with all 6 cylinders engaged in braking. **WARNING** Cautiously feel each wheel hub and brakedrum. Wheel hubs and brakedrums may be hot. Failure to follow this warning may result in serious burns.	

Table 1. Unit Preventive Maintenance Checks and Services (PMCS) for the M915 Family of Vehicles - Continued.

ITEM NO.	INTERVAL	MAN-HOURS	LOCATION ITEM TO CHECK/ SERVICE	PROCEDURE	NOT FULLY MISSION CAPABLE IF:
5 (Con't)	**Semi-annual**		**Road Test, Brakes**	g. Immediately after road test, carefully check and compare each wheel hub and brakedrum for overheating, which could indicate a dragging brake. A cool wheel hub and brakedrum could mean improperly adjusted, defective or inoperative brakes.	
6	**Semi-annual**		**Road Test, Interaxle Lockout (M915A3) or All-wheel Drive (M916A3 and M917A2)**	Check operation of interaxle lock-out or all-wheel drive (TM 9-2320-302-10).	
7	**Semi-annual**		**Road Test, Steering**	Check vehicle response to steering wheel action. Vehicle should respond quickly. With vehicle on straight level ground, lightly hold steering wheel to check for pull or wander. With vehicle in motion, free play should be no more than 2 ½ in (6.4 cm) in either direction.	
8	**Semi-annual**		**Road Test, Suspension**	Observe how vehicle responds to road shocks. Shifts, knocks or constant bouncing indicate possible malfunctions.	

Table 1. Unit Preventive Maintenance Checks and Services (PMCS) for the M915 Family of Vehicles - Continued.

ITEM NO.	INTERVAL	MAN-HOURS	LOCATION / ITEM TO CHECK/ SERVICE	PROCEDURE	NOT FULLY MISSION CAPABLE IF:
9	**Semi-annual**		**Engine Compartment, Engine**	a. Check all oil lines, fittings, and hoses for leaks. b. Check oil filter housing, oil pan, and oil pan drain plug for leaks. Tighten or replace any damaged component, if authorized. c. Check rocker arm cover for leaks. Tighten or replace any damaged component, if authorized. d. Check mounting hardware and attaching hardware for looseness. Tighten or replace any damaged component, if authorized.	
				WARNING DO NOT perform fuel system checks, inspections or maintenance while smoking or near fire, flame or sparks. Fuel may ignite, causing injury or death to personnel and damage to vehicle.	
10	**Semi-annual**	**0.5**	**Engine Compartment, Fuel System**	a. Replace all fuel filter elements (WP 0034 00). b. Inspect fuel lines, fuel tank, and fuel system components for leaks and damage. If authorized, replace damaged components.	

Table 1. Unit Preventive Maintenance Checks and Services (PMCS) for the M915 Family of Vehicles - Continued.

ITEM NO.	INTERVAL	MAN-HOURS	LOCATION / ITEM TO CHECK/ SERVICE	PROCEDURE	NOT FULLY MISSION CAPABLE IF:
11	**Semi-annual**		**<u>Engine Compartment</u>, Drive Belts and Pulleys**	a. Check for loose, missing, worn, broken, frayed or cracked drive belts (8).	

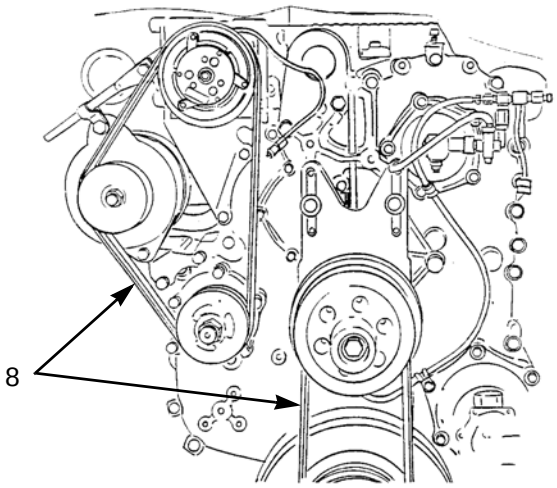

M915A3 (Old Model)

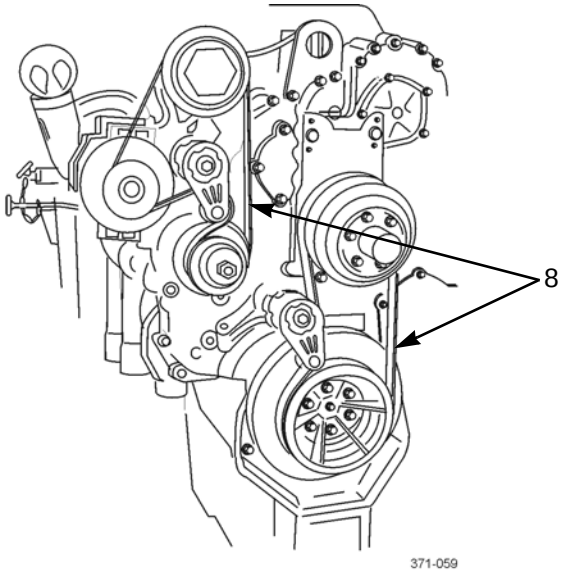

M915A3 (New Model), M916A3, M917A2

				b. Check alternator and air conditioning compressor mounting for looseness. Inspect brackets and attaching hardware for cracks, bends, and loose mounting. Replace damaged components as needed. c. For M915A3 Old Model, check tension of alternator/ac compressor belt and fan belt at center of longest belt free-span by moving belts by hand. If either belt has 1/2 inch or more play, adjust belt tension. d. Check for cracked pulleys or pulleys out of alignment.	

Table 1. Unit Preventive Maintenance Checks and Services (PMCS) for the M915 Family of Vehicles - Continued.

ITEM NO.	INTERVAL	MAN-HOURS	LOCATION / ITEM TO CHECK/ SERVICE	PROCEDURE	NOT FULLY MISSION CAPABLE IF:
				WARNING If NBC exposure is suspected, all air filter media should be handled by personnel wearing protective equipment. Consult your NBC Officer or NBC NCO for appropriate handling or disposal procedures.	
12	**Semi-annual**		**Engine Compartment, Air Intake System**	a. Check air cleaner, hoses, and air cleaner seal for proper installation, cracks, breaks or loose connections that could let unfiltered air into air intake system. b. Check air cooler intake screen for debris and damage. c. Check air intake filter element for clogging and wear.	
				NOTE Refer to TM 750-651 for cooling system service information.	
13	**Semi-annual**		**Engine Compartment, Cooling System**	a. Remove debris from cooling fins and check for bent fins. b. Inspect radiator and charge air cooler for leaks. c. Check radiator hoses for cracks, bulges or soft spots. Ensure that hose clamps are tight. d. Check radiator cap, gaskets, and rubber isolator mounts and fan shroud for cracks and leaks. e. Inspect water pump for leaks.	

Table 1. Unit Preventive Maintenance Checks and Services (PMCS) for the M915 Family of Vehicles - Continued.

ITEM NO.	INTERVAL	MAN-HOURS	LOCATION / ITEM TO CHECK/ SERVICE	PROCEDURE	NOT FULLY MISSION CAPABLE IF:
14	**Semi-annual**	**0.4**	**Engine Compartment, Power Steering Components**	a. Inspect power steering pump and reservoir (10) for leaks, cracks, loose hoses, or other damage. b. Remove plug (11) from reservoir (10) and drain fluid into a suitable container. c. Replace filter element (WP 0221 00). d. Install plug (11). Fill reservoir (10) through dipstick (9) opening with OE/HDO or OEA (Items 21 through 25, WP 0305 00). Capacity is approximately 2 qt (1.9 l). e. Start engine (TM 9-2320-302-10). Bring to operating temperature. Turn steering wheel in both directions to circulate power steering fluid. f. Check level of fluid on dipstick (9). Add fluid as required until level shows within correct range on dipstick.	

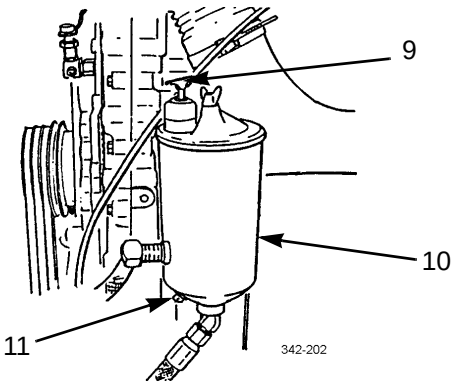

Table 1. Unit Preventive Maintenance Checks and Services (PMCS) for the M915 Family of Vehicles - Continued.

ITEM NO.	INTERVAL	MAN-HOURS	LOCATION ITEM TO CHECK/ SERVICE	PROCEDURE	NOT FULLY MISSION CAPABLE IF:
15	**Semi-annual**		**Engine Compartment, Electrical Components**	a. Inspect wiring for frays, splits, missing insulation or poor connections. Make repairs as needed, if authorized.	
				b. Check alternator and voltage regulator wiring for frays, splits, missing insulation, and loose terminal connections. Make repairs as needed, if authorized.	
16	**Semi-annual**	**0.4**	**Cab Floor and Engine Compartment Firewall, Foot Brake Valve**	Remove foot brake valve from firewall. Lubricate sliding surfaces of plunger and adapter bore with silicone grease (Item 19, WP 0305 00). Install foot brake valve.	
				 **WARNING** To avoid eye injury, eye protection is required when working around batteries. DO NOT smoke, use open flame, make sparks or create other ignition sources around batteries. If a battery is giving off gases, it can explode and cause injury to personnel. Remove all jewelry such as rings, ID tags, watches, and bracelets. If jewelry or a tool contacts a battery terminal, a direct short will result in instant heating, injury to personnel, and damage to equipment. **CAUTION** To reduce battery damage, do not remove batteries from battery box unless battery compartment is corroded (greenish/white powder) or during battery replacement. Do not jerk or pull on battery cables during visual inspection. Battery replacement will be performed only by Unit Maintenance personnel.	
17	**Semi-annual**		**Battery Box, Batteries**	a. Remove batteries from battery box (WP 0143 00).	
				b. For standard batteries, check for damaged or missing filler caps.	Filler caps are damaged or missing.
				c. For Hawker batteries, check for damaged, raised, or missing vent caps.	Vent caps are damaged, raised, or missing.

Table 1. Unit Preventive Maintenance Checks and Services (PMCS) for the M915 Family of Vehicles - Continued.

ITEM NO.	INTERVAL	MAN-HOURS	LOCATION / ITEM TO CHECK/ SERVICE	PROCEDURE	NOT FULLY MISSION CAPABLE IF:
17 (Con't)	**Semi-annual**		**Battery Box, Batteries**	**NOTE** Perform steps e. and f. for standard batteries.	
				d. Check for damaged terminal posts.	Terminal posts are damaged.
				e. Check electrolyte level (TM 9-6140-200-14).	Electrolyte is not at proper level.
				f. Check and record specific gravity of each cell in all batteries (TM 9-6140-200-14).	Specific gravity is not within standards.
				g. Check battery cables for frays, splits, and breaks.	Cables are missing, frayed, split or broken.
				h. Clean battery box.	
				i. Install batteries.	
				j. Coat terminals lightly with grease (Item 18, WP 0305 00).	
18	**Semi-annual**		**Exhaust System**	Inspect exhaust manifold, exhaust pipes, muffler, and tailpipe for leaks. Check for damaged pipes, loose clamps, and damaged gaskets and seals. Replace damaged components as needed.	
19	**Semi-annual**		**Air System, Brakes (All Models) and Central Tire Inflation System (CTIS) (M916A3 and M917A2)**	a. Charge air system (TM 9-2320-302-10).	
				b. Listen for sounds of leaks in all air lines and at valves and fittings.	
				c. With air system pressurized, apply a solution of detergent (Item 14, WP 0305 00) and water to air lines, valves, and fittings. Tighten loose connections. Make repairs as needed.	
				d. Inspect CTIS hoses at wheels for signs of chafing, rubbing, cracks, punctures or cuts. Replace hoses as needed.	
				e. Ensure that all air lines are not kinked and that they are properly supported.	
20	**Semi-annual**		**Air Conditioning System**	Leak test air conditioning system (WP 0295 00).	

Table 1. Unit Preventive Maintenance Checks and Services (PMCS) for the M915 Family of Vehicles - Continued.

ITEM NO.	INTERVAL	MAN-HOURS	LOCATION ITEM TO CHECK/ SERVICE	PROCEDURE	NOT FULLY MISSION CAPABLE IF:
21	**Semi-annual**		**Under Vehicle, Frame and Crossmembers**	a. Inspect frame and side rails for cracks, breaks, bends, wear, deterioration, and loose bolts. b. Inspect crossmembers for weld breaks, wear, and missing or loose capscrews, huckbolts, and rivets.	
22	**Semi-annual**		**Vehicle Exterior**	a. Inspect for corrosion in accordance with TB 43-0213. b. Inspect cab glass and doors, fenders, stowage boxes, and brackets for damage.	
23	**Semi-annual**		**Transmission**	a. Check transmission for leaks, loose bolts, and obvious damage. b. Check transmission output shaft seal for damage or leaks.	

Table 1. Unit Preventive Maintenance Checks and Services (PMCS) for the M915 Family of Vehicles - Continued.

ITEM NO.	INTERVAL	MAN-HOURS	LOCATION / ITEM TO CHECK/ SERVICE	PROCEDURE	NOT FULLY MISSION CAPABLE IF:
				NOTE When lubricating front axle steering components, vehicle must be raised to take weight off the suspension to permit lubrication to reach all axle bearing surfaces.	
24	**Semi-annual**	**0.6**	**Front Axle Steering Components, Lubrication**	a. Apply grease (Item 18, WP 0305 00) to grease fittings (12) at top and bottom of steering knuckle (13) until old lubricant is purged and fresh grease comes out areas indicated by arrows. Perform service at both axle ends.	
				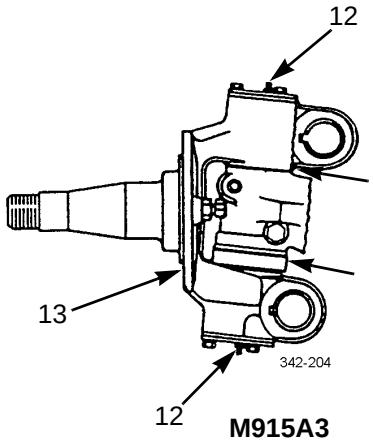 **M915A3**	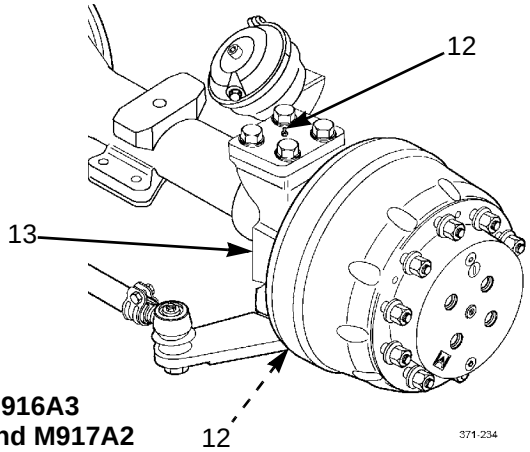 **M916A3 and M917A2**
				CAUTION If excess grease accumulates at front axle ball exterior between services, notify Direct Support Maintenance. Ball seal may be worn or leaking.	

Table 1. Unit Preventive Maintenance Checks and Services (PMCS) for the M915 Family of Vehicles - Continued.

ITEM NO.	INTERVAL	MAN-HOURS	LOCATION ITEM TO CHECK/ SERVICE	PROCEDURE	NOT FULLY MISSION CAPABLE IF:
24 (Con't)	**Semi-annual**	**0.6**	**Front Axle Steering Components, Lubrication**	b. Lubricate two tie-rod end grease fittings (18) with grease (Item 18, WP 0305 00). c. Lubricate two drag link grease fittings (17) with grease (Item 18, WP 0305 00). d. Lubricate steering column fitting (16) and two U-joint grease fittings (15) with grease (Item 18, WP 0305 00). Observe purging from all seals until new grease comes out. If grease does not purge, manipulate U-joints until purging occurs.	

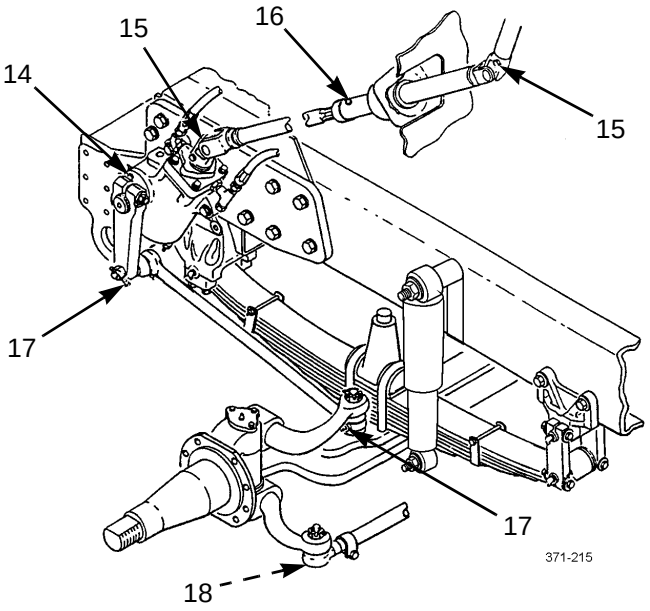

CAUTION

DO NOT use an automatic or power grease gun on fitting on trunnion side of steering gear because the rate of flow is too high. High flow rate could force grease inside high-pressure seal, contaminating hydraulic system and promoting seal leakage.

Table 1. Unit Preventive Maintenance Checks and Services (PMCS) for the M915 Family of Vehicles - Continued.

ITEM NO.	INTERVAL	MAN-HOURS	LOCATION / ITEM TO CHECK/ SERVICE	PROCEDURE	NOT FULLY MISSION CAPABLE IF:
24 (Con't)	**Semi-annual**	**0.6**	**Front Axle Steering Components, Lubrication**	e. Lubricate grease fitting (14) on trunnion side of steering gear, near output shaft, with grease (Item 18, WP 0305 00).	
				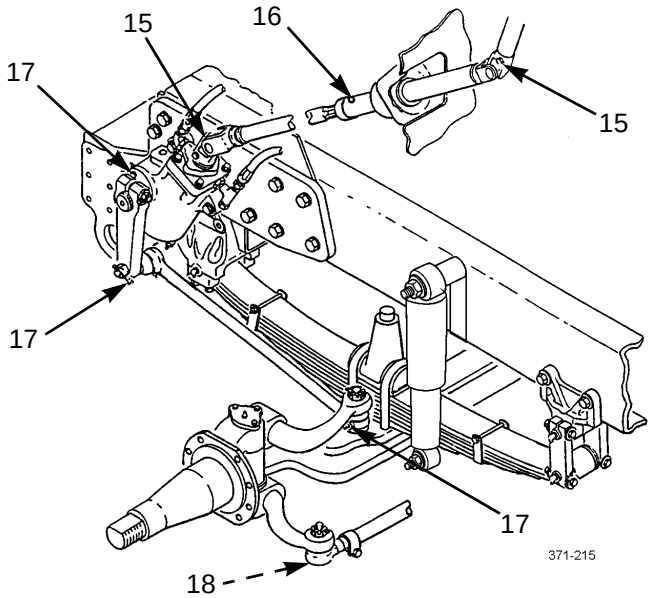	
25	**Semi-annual**		**Front Axle Steering Components, Inspection**	a. Check for looseness in steering column U-joints. b. Check steering gear for leaks and loose mounting bolts and components. Tighten or replace any damaged component, if authorized. c. Check tie-rod and drag link for movement by attempting to move by hand. Visually check ball joint ends for worn or damaged dust seals. If movement or damage is present, make repairs if authorized. d. Inspect all steering lines and fittings for looseness, damage or leaks. Tighten if loose or replace if damaged.	

Table 1. Unit Preventive Maintenance Checks and Services (PMCS) for the M915 Family of Vehicles - Continued.

ITEM NO.	INTERVAL	MAN-HOURS	LOCATION / ITEM TO CHECK/ SERVICE	PROCEDURE	NOT FULLY MISSION CAPABLE IF:
25 (Con't)	**Semi-annual**		**Front Axle Steering Components, Inspection**	e. Check adjustment of front axle steering stops (19). With brakes fully applied, turn steering wheel to one side to end of travel. Check both sides of vehicle for interference at tires and wheels. Minimum clearance is 1/2 in (1.3 cm) from any fixed object and 3/4 in (1.9 cm) from any moving object. Repeat for opposite end of steering wheel travel. Make adjustments as required.	
26	**Semi-annual**	**0.2**	**Front Axle, Suspension**	a. Inspect spring leaves for cracks and breaks. b. Inspect spring clips, saddles, saddle caps, spring hangers, and attaching hardware for looseness, cracks or other damage. Tighten or replace any damaged component, if authorized.	

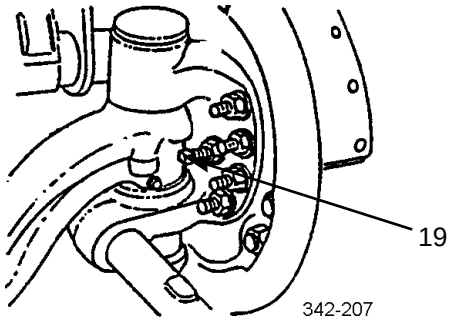

M915A3

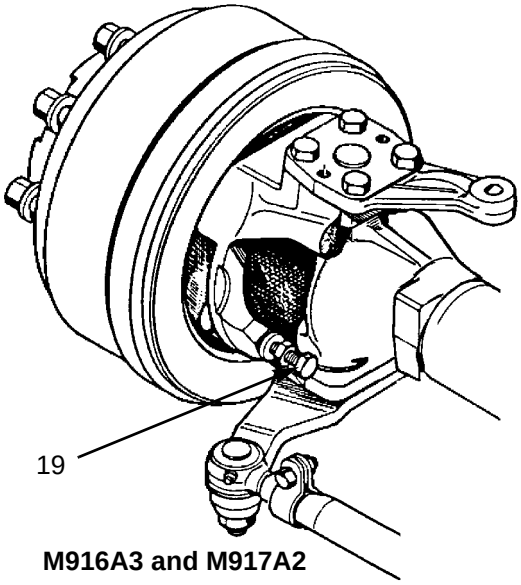

M916A3 and M917A2

Table 1. Unit Preventive Maintenance Checks and Services (PMCS) for the M915 Family of Vehicles - Continued.

ITEM NO.	INTERVAL	MAN-HOURS	LOCATION ITEM TO CHECK/ SERVICE	PROCEDURE	NOT FULLY MISSION CAPABLE IF:
26 (Con't)	**Semi-annual**		**Front Axle, Suspension**	c. Check for loose screws and missing and damaged front axle mounting hardware.	
				NOTE When lubricating front axle suspension components, vehicle must be raised to take weight off suspension to permit lubrication to reach bearing surfaces.	
				d. Lubricate three spring grease fittings (20) with grease (Item 18, WP 0305 00).	
				e. Check shock absorbers and mounting hardware for looseness or damage. Replace damaged components, if authorized.	

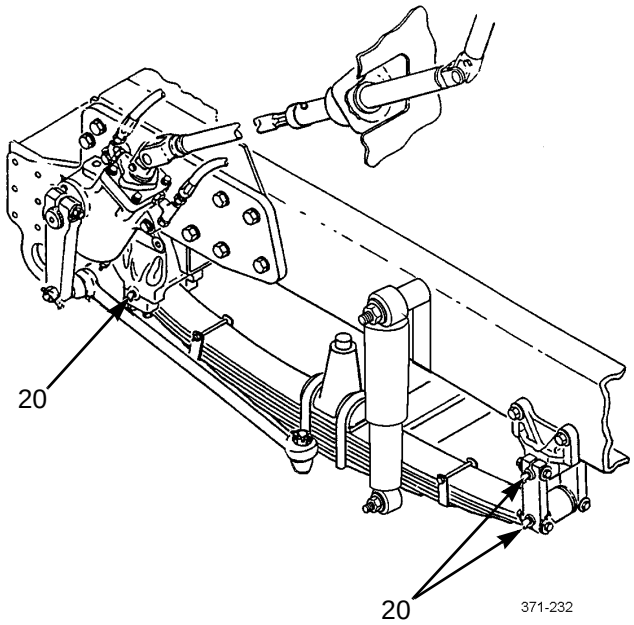

Table 1. Unit Preventive Maintenance Checks and Services (PMCS) for the M915 Family of Vehicles - Continued.

ITEM NO.	INTERVAL	MAN-HOURS	LOCATION / ITEM TO CHECK/ SERVICE	PROCEDURE	NOT FULLY MISSION CAPABLE IF:
27	**Semi-annual**	**0.1**	**Front Axle Brake Components, Slack Adjusters**	Lubricate grease fitting (22) at each slack adjuster with grease (Item 18, WP 0305 00) until new grease flows from pressure relief valve in pawl capscrew (21).	
28	**Semi-annual**	**0.1**	**Front Axle Brake Components, Camshaft Bushings**	Lubricate grease fitting (23) at each camshaft bracket with grease (Item 18, WP 0305 00).	

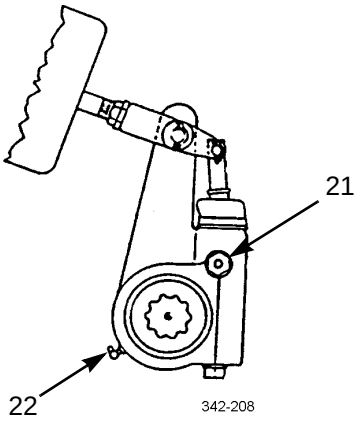

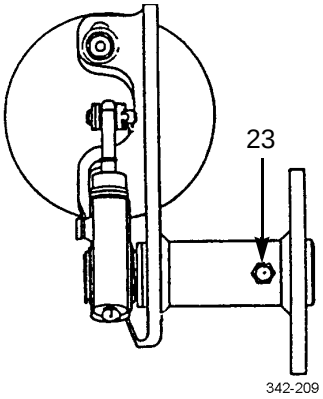

Table 1. Unit Preventive Maintenance Checks and Services (PMCS) for the M915 Family of Vehicles - Continued.

ITEM NO.	INTERVAL	MAN-HOURS	LOCATION / ITEM TO CHECK/ SERVICE	PROCEDURE	NOT FULLY MISSION CAPABLE IF:
29	**Semi-annual**	**0.2**	**Front Axle Wheel End, Lubrication (M916A3 and M917A2)**	a. Position vehicle so that fill hole plug (24) being removed is above center line of wheel end. b. Remove level control plug (25) and seal. Oil should be level with bottom of plug opening. c. If oil level is low, remove fill hole plug (24) and add oil (Items 26 through 28, WP 0305 00) until oil is level with bottom of level control hole. d. Clean, install, and tighten fill plug (24) to 18-25 ft-lb. e. Clean, install, and tighten seal and level control plug (25) to 8 ft-lb.	

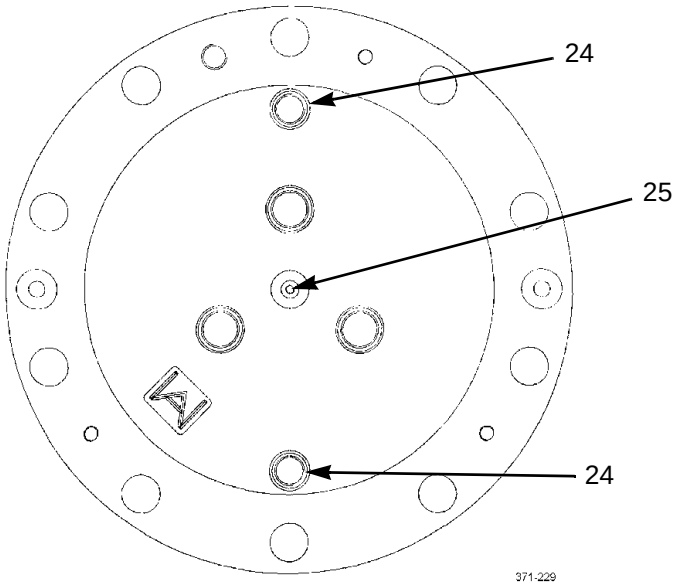

Table 1. Unit Preventive Maintenance Checks and Services (PMCS) for the M915 Family of Vehicles - Continued.

ITEM NO.	INTERVAL	MAN-HOURS	LOCATION ITEM TO CHECK/ SERVICE	PROCEDURE	NOT FULLY MISSION CAPABLE IF:
30	**Semi-annual**	**0.2**	**Front Axle, Differential (M916A3 and M917A2)**	Remove fill plug (26) and check level of fluid in differential. When housing is cold, level should be even with bottom of fill plug opening. As required, add oil (Items 26 through 28, WP 0305 00).	
				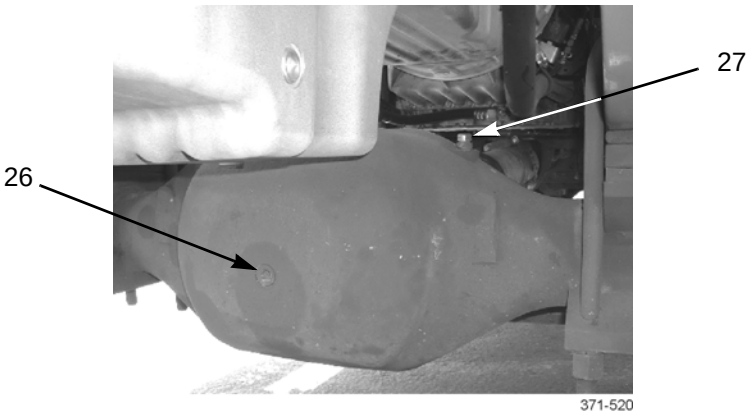	
31	**Semi-annual**	**0.2**	**Front Axle, Breathers**	Remove breather (27), clean, and reinstall.	

Table 1. Unit Preventive Maintenance Checks and Services (PMCS) for the M915 Family of Vehicles - Continued.

ITEM NO.	INTERVAL	MAN-HOURS	LOCATION / ITEM TO CHECK/ SERVICE	PROCEDURE	NOT FULLY MISSION CAPABLE IF:
32	**Semi-annual**	**0.2**	**Transfer Case (M916A3 and M917A2)**	a. Clean around oil fill/level plug (28). b. Remove oil fill/level plug (28). Oil should be even with bottom of fill plug hole. Check plug and opening for metal particles. If necessary, add OE/HDO or OEA (Item 21 or 25, WP 0305 00). c. Tighten oil fill/level plug to 35-50 lb-ft (47-68 Nm).	
				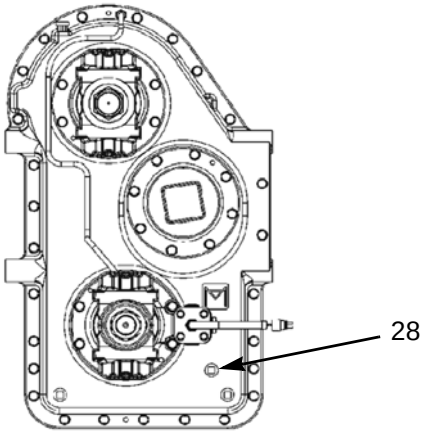 371-223	
33	**Semi-annual**	**0.1**	**Drivelines**	a. Check for looseness or side play in drivelines. There should be no play at U-joints. Check for bends, cracks, and missing weights. Make repairs as needed. b. Check rubber boot for damage. c. Check that U-joint mounting screw torque is 33-38 lb-ft (44-52 Nm). d. Inspect for loose or worn bearings, damaged seals, and damaged or missing grease fittings. Make repairs as needed.	

Table 1. Unit Preventive Maintenance Checks and Services (PMCS) for the M915 Family of Vehicles - Continued.

ITEM NO.	INTERVAL	MAN-HOURS	LOCATION / ITEM TO CHECK/ SERVICE	PROCEDURE	NOT FULLY MISSION CAPABLE IF:
33 (Con't)	**Semi-annual**	**0.1**	**Drivelines**	e. Using a hand-type grease gun (30), lubricate four grease fittings (29) at each driveline with grease (Item 18, WP 0305 00) to purge seals. Fresh grease should be evident at all universal joint bearing seals.	
				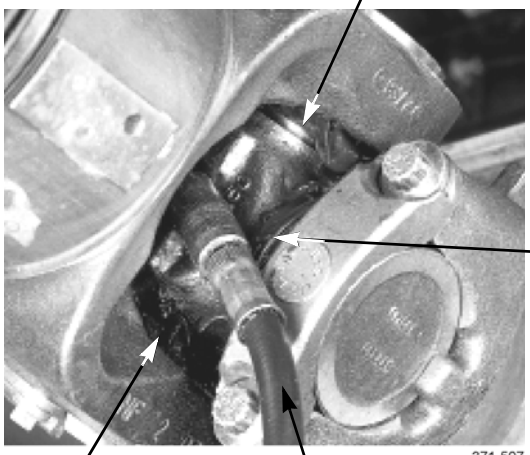	
34	**Semi-annual**		**<u>Rear Axles</u>, Suspension**	a. Inspect spring pack for cracks or breaks. b. Inspect spring pack and attaching hardware for looseness, cracks, or other damage. Tighten or replace damaged components, if authorized. c. Check torque rod rubber bushings for splitting or deterioration. Notify Direct Support Maintenance of any damage found. d. Check shock absorbers and mounting hardware for looseness or damage. Replace damaged component, if authorized.	

Table 1. Unit Preventive Maintenance Checks and Services (PMCS) for the M915 Family of Vehicles - Continued.

ITEM NO.	INTERVAL	MAN-HOURS	LOCATION ITEM TO CHECK/ SERVICE	PROCEDURE	NOT FULLY MISSION CAPABLE IF:
35	**Semi-annual**	**0.1**	**Rear Axle Brake Components, Slack Adjusters**	Lubricate grease fitting (32) at each slack adjuster with grease (Item 18, WP 0305 00) until new grease flows from pressure relief valve in pawl capscrew (31).	
				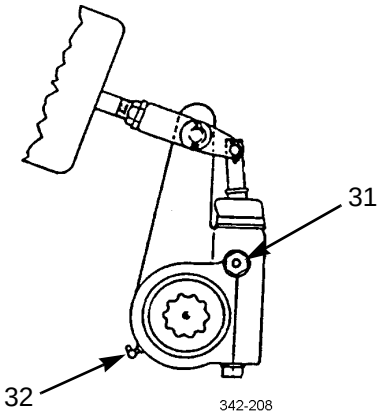	
36	**Semi-annual**	**0.1**	**Rear Axle Brake Components, Camshaft Bushings**	Lubricate grease fitting (33) at each camshaft bracket with grease (Item 18, WP 0305 00).	
				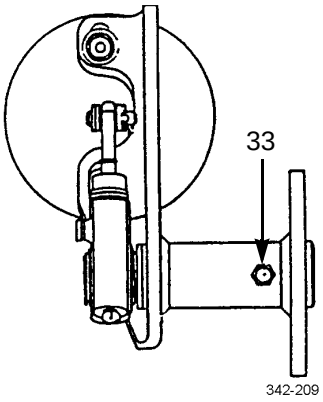	

Table 1. Unit Preventive Maintenance Checks and Services (PMCS) for the M915 Family of Vehicles - Continued.

ITEM NO.	INTERVAL	MAN-HOURS	LOCATION / ITEM TO CHECK/ SERVICE	PROCEDURE	NOT FULLY MISSION CAPABLE IF:
				NOTE Reinstall breather with tube detente toward wheel end of axle to prevent leakage.	
37	**Semi-annual**		**Rear Axles, Breathers**	Remove breather (34) from each axle. Clean and reinstall.	
38	**Semi-annual**	**0.3**	**Rear Axles, Differentials**	Use socket (Item 40, WP 0306 00) to remove filler plugs (35) and check level of fluid in differentials. When housing is cold, level should be even with bottom of filler plug opening. As required, add gear lubricating oil (Items 26 through 28, WP 0305 00). Install filler plugs.	

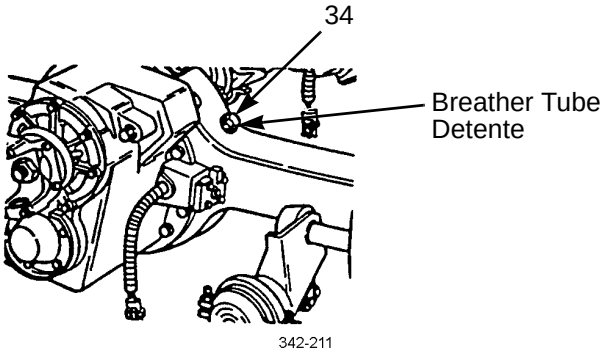

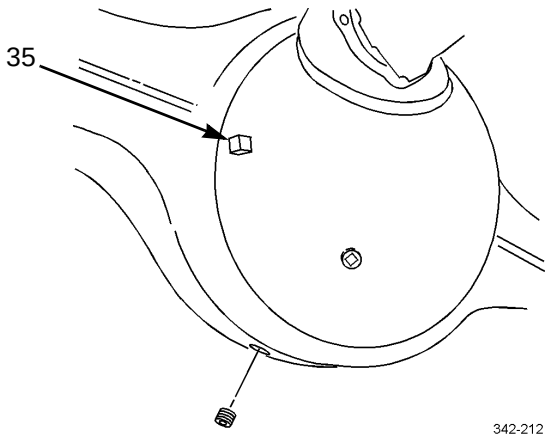

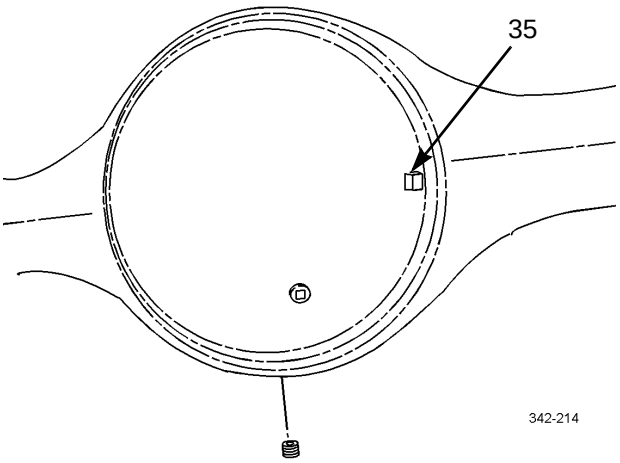

Table 1. Unit Preventive Maintenance Checks and Services (PMCS) for the M915 Family of Vehicles - Continued.

ITEM NO.	INTERVAL	MAN-HOURS	LOCATION / ITEM TO CHECK/ SERVICE	PROCEDURE	NOT FULLY MISSION CAPABLE IF:
39	**Semi-annual**	**0.1**	**Rear of Vehicle, Tail Roller (M916A3)**	Lubricate two tail roller grease fittings (36) with grease (Item 18, WP 0305 00). Rotate tail roller while lubricating.	
40	**Semi-annual**	**0.3**	**Hydraulic Winch, Winch Cable (M916A3)**	Unwind entire length of cable (TM 9-2320-302-10). Soak cable with clean OE/HDO (Item 24, WP 0305 00) and clean with a brush. Wipe off excess oil and coat cable with grease (Item 18, WP 0305 00) before rewinding on drum.	

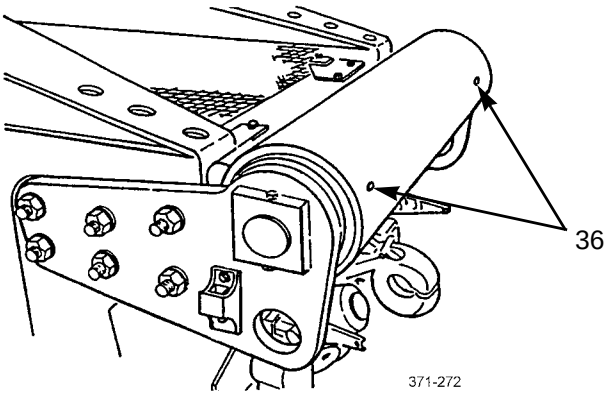

Table 1. Unit Preventive Maintenance Checks and Services (PMCS) for the M915 Family of Vehicles - Continued.

ITEM NO.	INTERVAL	MAN-HOURS	LOCATION / ITEM TO CHECK/ SERVICE	PROCEDURE	NOT FULLY MISSION CAPABLE IF:
41	**Semi-annual**	**0.2**	**Hydraulic Winch, Winch Drum (M916A3)**	a. Remove filler plug (38) and check level of oil in drum (37). Level should be even with bottom of filler plug opening. b. If level is low, fill drum (37) with gear lubricating oil (Item 26 through 28, WP 0305 00) through filler plug (38) opening. Approximate capacity is 5 qt (4.7 l). Install plug.	
42	**Semi-annual**		**Cab Compartment, Seats and Seat Belts**	Check seats and seat belts for loose mountings and damage. Replace seat/seat mounts if damaged. Replace seat belts if any seat belt system shows cuts, fraying, extreme wear, abrasions to seat belt webbing or damage to buckle or latch plate retractor hardware.	
43	**Annual**	**0.7**	**Engine Compartment, Cooling System**	a. Test, drain, and refill cooling system in accordance with (WP 0046 00). b. Change water filter element (WP 0057 00). c. Check for presence of transmission oil in coolant.	Transmission oil is in coolant. Notify Direct Support Maintenance.
44	**Annual**		**Air Dryers**	Service air dryers (WP 0200 00).	

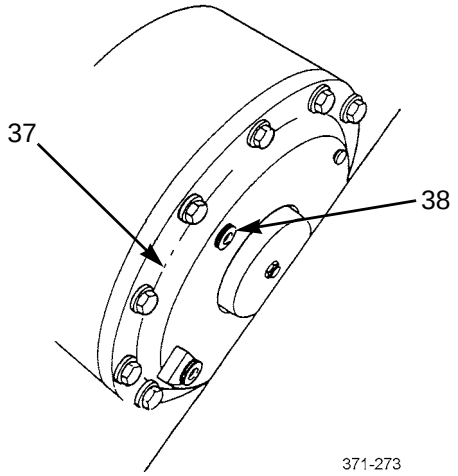

Table 1. Unit Preventive Maintenance Checks and Services (PMCS) for the M915 Family of Vehicles - Continued.

ITEM NO.	INTERVAL	MAN-HOURS	LOCATION ITEM TO CHECK/ SERVICE	PROCEDURE	NOT FULLY MISSION CAPABLE IF:
45	**10,000 Miles or Annual**	**1.0**	**Transmission**	a. Drain transmission fluid, replace filters, and refill (WP 0156 00).	
				b. Check for presence of coolant in transmission oil.	Coolant is in transmission oil. Notify Direct Support Maintenance.
46	**10,000 Miles or Annual**	**0.5**	**Rear Axles, Differentials**	a. Use socket (Item 40, WP 0306 00) to remove plugs (39) and drain fluid while assemblies are still warm from operation. Check magnetic drain plugs for excessive metal particle buildup. Notify Direct Support Maintenance if this condition exists. Clean plugs.	

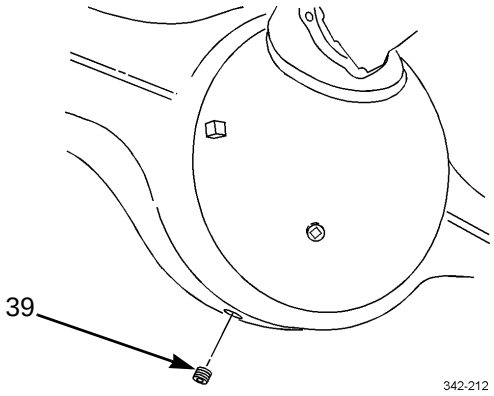

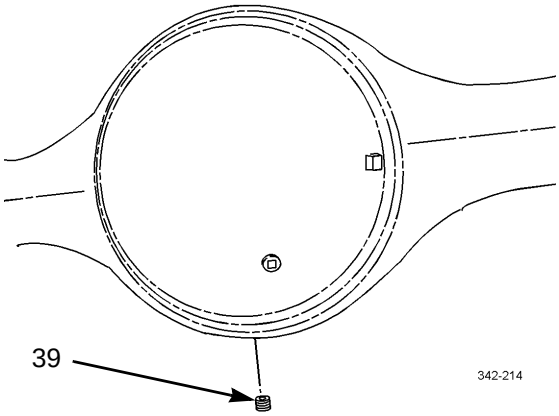

Table 1. Unit Preventive Maintenance Checks and Services (PMCS) for the M915 Family of Vehicles - Continued.

ITEM NO.	INTERVAL	MAN-HOURS	LOCATION / ITEM TO CHECK/ SERVICE	PROCEDURE	NOT FULLY MISSION CAPABLE IF:
46 (Con't)	**10,000 Miles or Annual**		**Rear Axles, Differentials**	**NOTE** There may be approximately 1 pt (0.47 l) of lubricant remaining in filter element. Be careful not to spill it when removing element. b. Use a suitable filter strap wrench to replace filter element (40) from forward-rear axle differential. c. Install plugs (39) and fill differentials with gear lubricating oil (Items 26 through 28, WP 0305 00) until level is even with filler plug (35) openings. Use the following capacities as a guide. Do not overfill: M915A3 Rear Tandem Forward-rear 13 qt (12.3 l) Rear-rear 14.5 qt (13.7 l) M916A3 and M917A2 Rear Tandem Forward-rear 22 qt (20.8 l) Rear-rear 23 qt (21.7 l)	

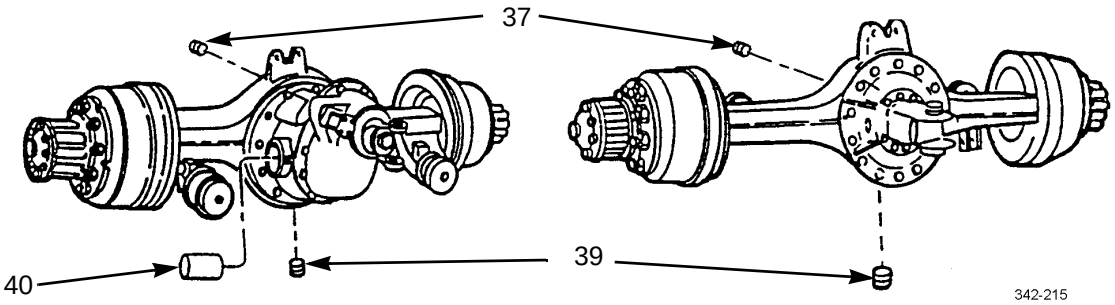

Table 1. Unit Preventive Maintenance Checks and Services (PMCS) for the M915 Family of Vehicles - Continued.

ITEM NO.	INTERVAL	MAN-HOURS	LOCATION ITEM TO CHECK/ SERVICE	PROCEDURE	NOT FULLY MISSION CAPABLE IF:
47	**10,000 Miles or Annual**	**1.0**	**Engine Compartment, Engine Crankcase**	a. With engine warm, remove drain plug (5) from oil pan and completely drain oil from crankcase. b. Replace all oil filters (M915A3 Old Model). c. Remove and clean oil filters (All Except M915A3 Old Model) (WP 0027 00). d. Install drain plug (5).	

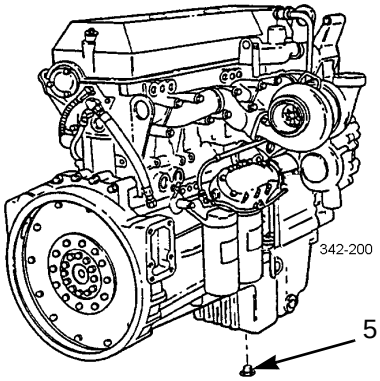

				e. Fill crankcase with OE/HDO or OEA (Items 21 through 25, WP 0305 00) through filler tube (6) opening. Capacity with filters is approximately 41 qt (38.8 l). f. Run engine. Remove dipstick (7) and check level of oil on dipstick. Level should be between ADD and FULL marks on dipstick.	

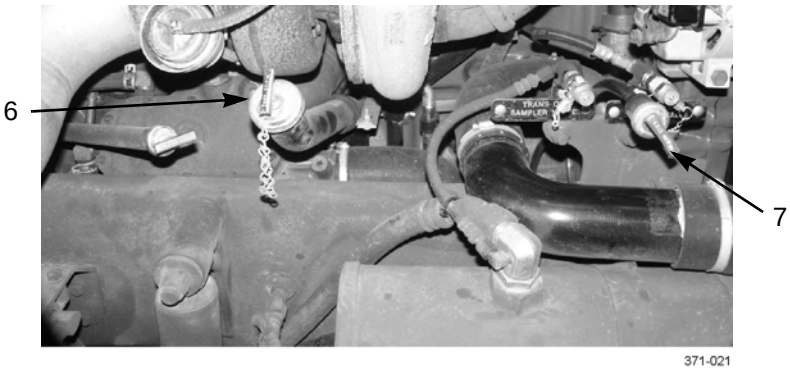

Table 1. Unit Preventive Maintenance Checks and Services (PMCS) for the M915 Family of Vehicles - Continued.

ITEM NO.	INTERVAL	MAN-HOURS	LOCATION ITEM TO CHECK/ SERVICE	PROCEDURE	NOT FULLY MISSION CAPABLE IF:
48	**10,000 Miles or Annual**	**0.6**	**<u>Front Axle</u>, Transfer Case (M916A3 and M917A2)**	a. Remove drain plug (41) and drain fluid into a suitable container. Clean drain plug. Check for metal particles in oil. Notify Direct Support Maintenance if this condition exists. b. Install and tighten drain plug (41) to 35-50lb-ft (47-68 Nm). c. Clean area around oil fill/level plug (28). Remove and clean plug.	
				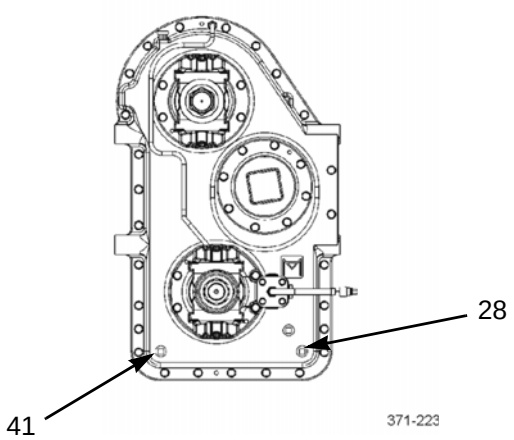	
				d. Add OE/HDO or OEA (Item 21 or 25, WP 0305 00) until oil level is even with bottom of fill plug hole (30). e. Install and tighten oil fill/level plug (30) to 35-50 lb-ft (47-68 Nm). f. Remove and check for clogged breather (44). If clogged, replace breather (WP 0164 00). g. Start vehicle, engage transfer case, and drive vehicle 1/4 mile (0.4 km). h. Recheck fluid level. i. Reinstall and tighten oil fill/ level plug to 35-50 lb-ft (47-68 Nm).	

Table 1. Unit Preventive Maintenance Checks and Services (PMCS) for the M915 Family of Vehicles - Continued.

ITEM NO.	INTERVAL	MAN-HOURS	LOCATION ITEM TO CHECK/ SERVICE	PROCEDURE	NOT FULLY MISSION CAPABLE IF:
49	**Annual**		**Front and Rear Wheels, Wheel Bearings**	Remove, clean, inspect, pack, install, and adjust wheel bearings.	
50	**Annual**		**Front and Rear Wheels, Brakeshoe Linings**	Check brakeshoe linings for a minimum thickness of 1/4 in (6.5 mm). Replace worn or damaged brakeshoes.	
51	**Annual**		**Front Axle, Stop Cushions**	Check front axle stop cushions for wear or deterioration.	
52	**Annual**	**0.2**	**Front Axle Wheel End, Lubrication (M916A3 and M917A2)**	a. Position vehicle so that fill hole plugs (24) are at 6 and 12 o'clock positions. b. Remove top and bottom fill hole plugs (24) and drain oil into suitable container. c. Clean, install, and tighten hole plug (24) at 6 o'clock position to 18-25 lb. d. Remove level control plug (25) and seal. e. Add oil (Items 26 through 28, WP 0305 00) through fill hole plug (24) at 12 o'clock position until oil is level with bottom of level control hole. f. Clean, install, and tighten seal and level control plug (25) to 8 ft-lb. g. Clean, install, and tighten top fill hole plug (24) at 12 o'clock position to 18-25 lb-ft.	

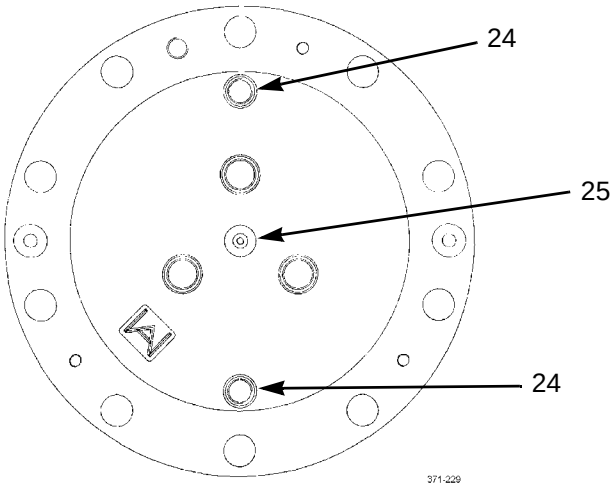

Table 1. Unit Preventive Maintenance Checks and Services (PMCS) for the M915 Family of Vehicles - Continued.

ITEM NO.	INTERVAL	MAN-HOURS	LOCATION ITEM TO CHECK/ SERVICE	PROCEDURE	NOT FULLY MISSION CAPABLE IF:
53	**Annual**	**0.5**	**<u>Front Axle</u>, Differential (M916A3 and M917A2)**	a. With assembly warm from operation, remove drain plug (42) and drain oil into a suitable container. Check drain plug for metal particle buildup. Notify Direct Support Maintenance if this condition exists. Clean plug. b. Install drain plug (42). c. Remove fill plug (26) and fill differential with oil (Items 26 through 28, WP 0305 00) until even with fill plug opening. d. Install fill plug (26).	

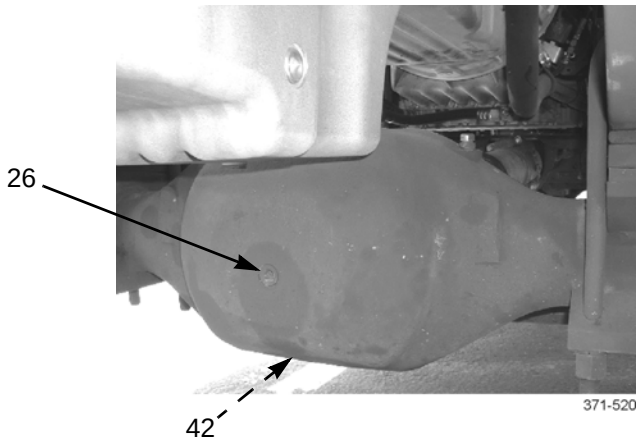

Table 1. Unit Preventive Maintenance Checks and Services (PMCS) for the M915 Family of Vehicles - Continued.

ITEM NO.	INTERVAL	MAN-HOURS	LOCATION / ITEM TO CHECK/ SERVICE	PROCEDURE	NOT FULLY MISSION CAPABLE IF:
54	**10,000 Miles or Annual**	**0.5**	**Hydraulic Winch, Reservoir and Drum (M916A3)**	a. Remove drain plug (43) from winch reservoir. Remove drain plug (44) from drum (37). Drain fluids into a suitable container.	

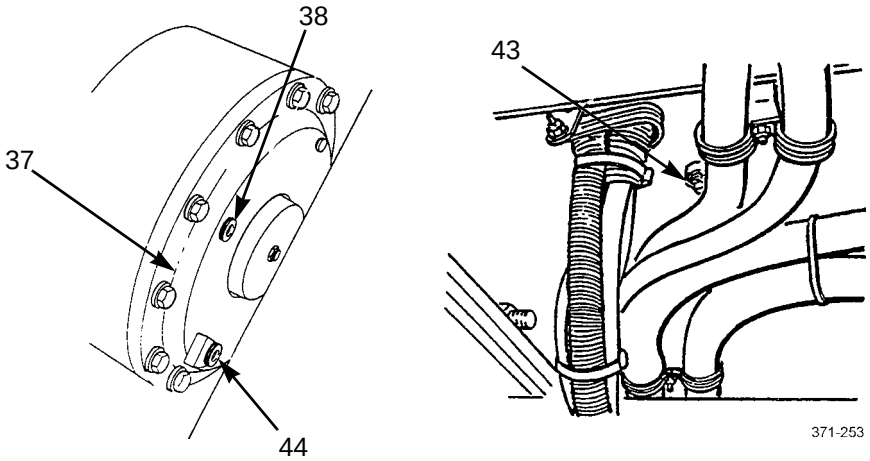

				b. Remove filler cap (46) from reservoir. Clean filler cap strainer.	

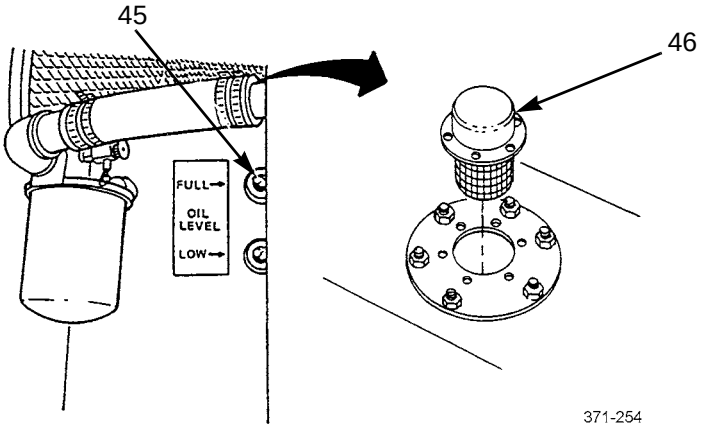

				c. Replace reservoir oil filter element (WP 0272 00). d. Replace filter element inside reservoir (WP 0271 00).	

Table 1. Unit Preventive Maintenance Checks and Services (PMCS) for the M915 Family of Vehicles - Continued.

ITEM NO.	INTERVAL	MAN-HOURS	LOCATION ITEM TO CHECK/ SERVICE	PROCEDURE	NOT FULLY MISSION CAPABLE IF:
54 (Con't)	**10,000 Miles or Annual**	**0.5**	**Hydraulic Winch, Reservoir and Drum (M916A3)**	e. Install drain plug (43) in winch reservoir. Install drain plug (44) in drum (37). f. Fill reservoir with OE/HDO or OEA (Item 21 or 22, WP 0305 00) through filler cap (46) opening until level is visible in top sight indicator (45). Approximate capacity is 42 gal (159 l). Install filler cap. g. Fill drum (37) with gear lubricating oil (Item 26 through 28, WP 0305 00) through filler plug (38) opening. Approximate capacity is 5 qt (4.7 l). Level should be even with bottom of filler plug opening. Install filler plug.	
55	**Annual**		**Data Plates**	Check data plates to ensure legibility.	
56	**Annual**		**Collision Warning System (CWS)**	Align CWS antenna (WP 0134 00).	

Table 2. PMCS Mandatory Replacement Parts List - Semiannual.

ITEM NO.	PART NUMBER	NSN	NOMENCLATURE	QTY
1	83213D	4330-01-330-8203	Power steering reservoir, filter element	1
2	TP916	2910-01-022-8183	Fuel filter, filter elements M915A3 (All Models) M916A3/M917A2	 2 1
3	R90P	2910-01-443-0385	Element, strainer	1
4	25010495	2940-01-197-7106	Engine oil, filter element, fullflow (M915A3 Old Model)	2

Table 3. PMCS Mandatory Replacement Parts List - Annual.

ITEM NO.	PART NUMBER	NSN	NOMENCLATURE	QTY
1	3280-V-8394	2940-00-586-4792	Forward-rear differential, filter element	1
2	35066	5330-01-149-9677	Front axle, oil seal	2
3	 47697 A-1205-N-2536	 5330-01-117-1014 5330-01-446-3781	Forward-rear axle, oil seal M915A3 (All Models) M916A3/M917A2	 2 2
4	47697	5330-01-117-1014	Rear-rear axle, oil seal	2
5	R950011	4440-01-443-9031	Canister, air dryer M915A3 (All Models) M916A3/M917A2	 1 2
6	WF-2077 (M915A3 Old Model) 3318319 (M915A3 New Model, M916A3, M917A2)	2910-01-274-1915 2940-01-117-5552	Water filter, filter element	1
7	29509723	2910-01-431-1324	Filter element, transmission	2
8	29524448	5331-01-439-6677	O-ring, filter, transmission	1
9	29507437	5331-01-360-7725	O-ring, filter, transmission	1
10	74011	4330-01-330-0670	Filter element, winch reservoir (M916A3)	1
11	MA207-21681	4330-01-085-6291	Filter element, winch reservoir (M916A3)	1

END OF WORK PACKAGE

ENGINE OIL FILL TUBE MAINTENANCE 0024 00

THIS WORK PACKAGE COVERS

Oil Fill Tube Cap Removal, Oil Fill Tube Removal, Oil Filler Hole Cover and Gasket Removal, Oil Filler Hole Cover and Gasket Installation, Oil Fill Tube Installation, Oil Fill Tube Cap Installation

INITIAL SETUP

Tools and Special Tools

Tool kit, general mechanic's (Item 50, WP 0306 00)

Wrench, torque, 15-75 lb-ft (Item 57, WP 0306 00)

Materials/Parts

Gasket (P/N 8929302)

Nut, lock (P/N M45913/1-4CG5C)

Compound, sealing, pipe (Item 13, WP 0305 00)

Rags, wiping (Item 31, WP 0305 00)

OIL FILL TUBE CAP REMOVAL

Remove screw (1) and oil fill tube cap (2) from oil fill tube (3).

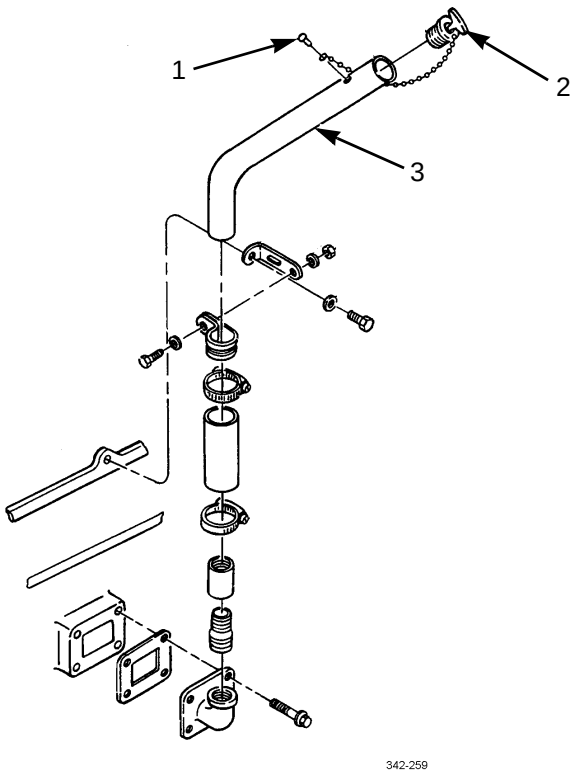

OIL FILL TUBE REMOVAL

1. Remove locknut (6), two washers (5), screw (18), and clamp (9) from standoff bracket (4). Discard locknut.
2. Loosen two hose clamps (10) and remove filler tube (3) and hose (11) from pipe coupling (12).

NOTE

Perform step 3 only if standoff bracket is damaged.

3. Remove screw (8),washer (7), and standoff bracket (4) from engine block (17).

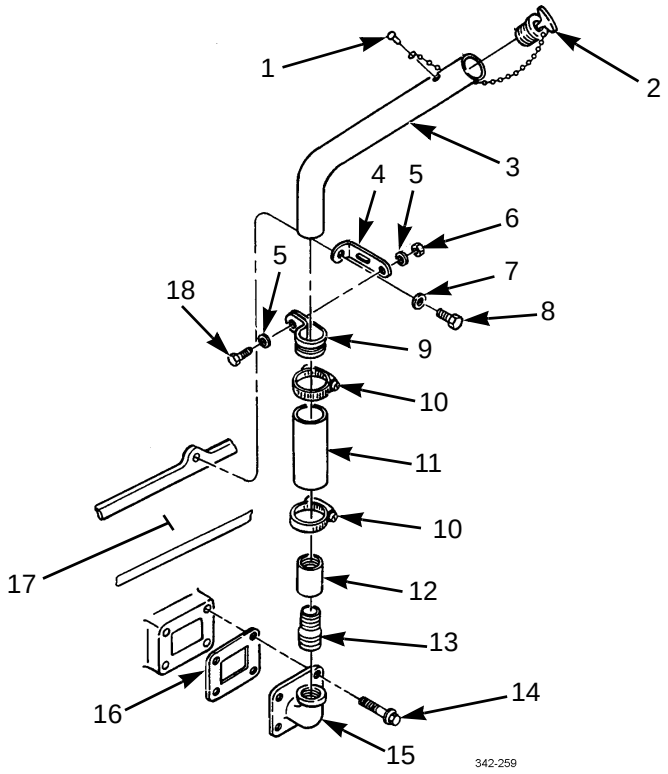

OIL FILLER HOLE COVER AND GASKET REMOVAL

1. Remove pipe coupling (12) and nipple (13) from oil filler hole cover (15).
2. Remove four screws (14), oil filler hole cover (15), and gasket (16) from engine block (17). Discard gasket.

OIL FILLER HOLE COVER AND GASKET INSTALLATION

NOTE

Ensure that all old gasket material has been removed from mounting surfaces.

OIL FILLER HOLE COVER AND GASKET INSTALLATION - CONTINUED

1. Install new gasket (16) and oil filler hole cover (15) on engine block (17) with four screws (14). Torque screws to 22-28 lb-ft (30-38 Nm).


WARNING

Adhesives and sealing compounds can burn easily, can give off harmful vapors, and are harmful to skin and clothing. To avoid injury or death, keep away from open fire and use in a well-ventilated area. If adhesive or sealing compound contacts skin or clothing, wash immediately with soap and water.

2. Lightly coat threads of pipe nipple (13) with pipe sealing compound. Install pipe nipple and pipe coupling (12) on oil filler hole cover (15).

OIL FILL TUBE INSTALLATION

NOTE

Perform step 1 only if standoff bracket was removed.

1. Install standoff bracket (4) on engine block (17) with washer (7) and screw (8).
2. Position two hose clamps (10) and hose (11) on pipe coupling (12). Tighten lower hose clamp.
3. Position upper hose clamp (10) on filler tube (3) and install filler tube on hose (11). Tighten upper hose clamp.
4. Install clamp (9) on standoff bracket (4) and secure in place with screw (18), two washers (5) and new locknut (6).

OIL FILL TUBE CAP INSTALLATION

1. Install oil fill tube cap (2) on oil fill tube (3).
2. Secure oil fill tube cap (2) retaining chain on oil fill tube (3) with screw (1).

END OF WORK PACKAGE

ENGINE OIL LEVEL DIPSTICK, TUBE, AND ADAPTER REPLACEMENT 0025 00

THIS WORK PACKAGE COVERS

Removal, Installation

INITIAL SETUP

Tools and Special Tools

Tool kit, general mechanic's (Item 50, WP 0306 00)

Wrench, torque, 0-300 lb-in (Item 56, WP 0306 00)

Materials/Parts

Nut, lock (P/N M45913/1-4CG5C)

Compound, sealing, pipe (Item 13, WP 0305 00)

Equipment Condition

Transmission oil cooler removed (WP 0161 00 or WP 0162 00)

REMOVAL

1. Turn oil level dipstick (8) counterclockwise and remove from dipstick tube (9).
2. Remove locknut (3), two washers (4), and screw (10) from cable clamp (11) to standoff bracket (5). Discard locknut.
3. Separate cable clamp (11) from standoff bracket (5).
4. Remove dipstick tube (9) from engine block adapter (12).
5. Remove engine block adapter (12) from engine block (6).

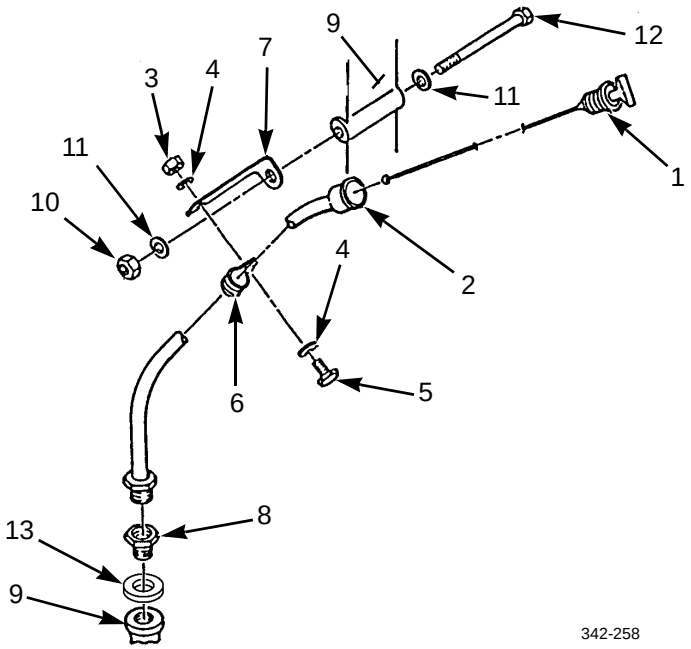

REMOVAL- CONTINUED

NOTE

Perform step 6 only if standoff bracket is damaged.

6. Remove nut (1), two washers (2), screw (7), and standoff bracket (5) from engine block (6).

INSTALLATION

NOTE

Perform step 1 only if standoff bracket was removed.

1. Install standoff bracket (5) on engine block (6) with two washers (2), screw (7), and nut (1).


WARNING

Adhesives and sealing compounds can burn easily, can give off harmful vapors, and are harmful to skin and clothing. To avoid injury or death, keep away from open fire and use in a well-ventilated area. If adhesive or sealing compound contacts skin or clothing, wash immediately with soap and water.

2. Lightly coat threads of engine block adapter (12) with pipe sealing compound. Engine block adapter in engine block (6). Tighten engine block adapter to 168-216 lb-in (19-24 Nm).
3. Position cable clamp (11) on dipstick tube (9).
4. Install dipstick tube (9) on engine block adapter (12).
5. Install cable clamp (11) on standoff bracket (5) with screw (10), two washers (4), and new locknut (3).
6. Insert oil level dipstick (8) into dipstick tube (9) and turn clockwise until locked.

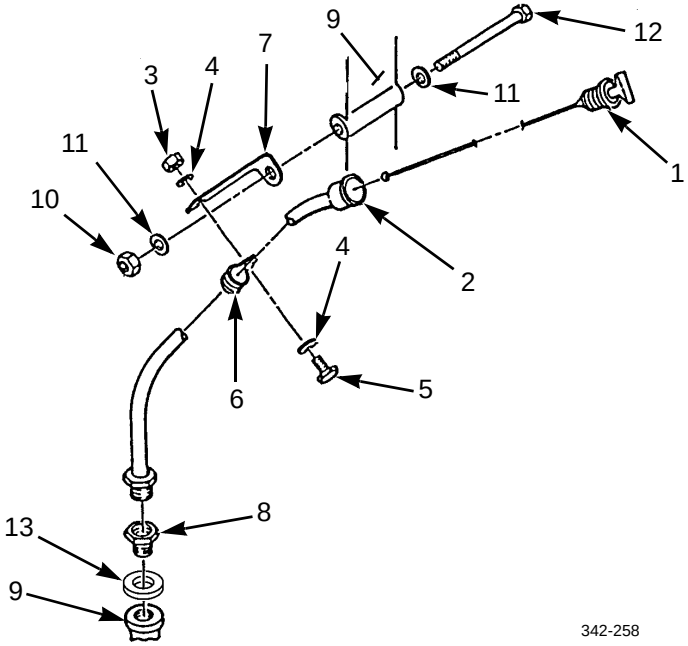

7. Install transmission oil cooler (WP 0161 00 or WP 0162 00).

END OF WORK PACKAGE

ENGINE OIL FILTER ELEMENT REPLACEMENT (M915A3 OLD MODEL) 0026 00

THIS WORK PACKAGE COVERS

Removal, Installation

INITIAL SETUP

Tools and Special Tools

Tool kit, general mechanic's (Item 50, WP 0306 00)

Pan, drain (Item 29, WP 0306 00)

Wrench, strap (Item 54, WP 0306 00)

Materials/Parts

Element, full flow filter (P/N PF 2100) (2)

Oil, lubricating (Item 23, WP 0305 00)

Rags, wiping (Item 31, WP 0305 00)

References

TM 9-2320-302-10

REMOVAL

WARNING

Hot oil can cause serious burns. Allow engine to cool before changing oil filter elements. Engine oil is very slippery. Immediately wipe up any spills. Failure to follow this warning may result in injury to personnel.

NOTE

Oil filter element replacement should be performed on a warm engine.

REMOVAL - CONTINUED

1. Place drain pan under two filter elements (2) to catch oil.
2. Remove two filter elements (2) with gaskets (3) from oil cooler adapter (1). Discard oil filter elements and gaskets.

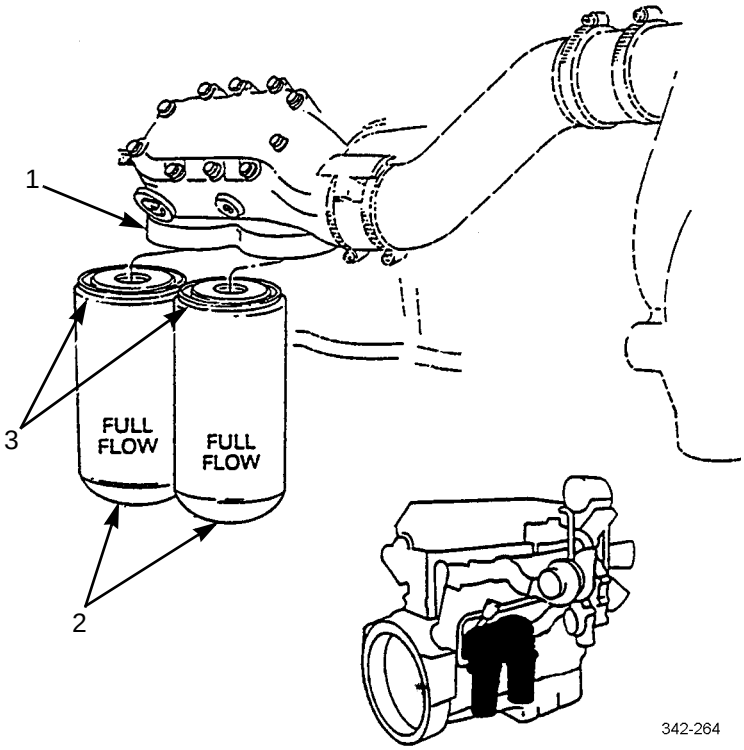

INSTALLATION

1. Lightly coat two new gaskets (3) with clean lubricating oil.
2. Fill two new oil filter elements (2) with clean lubricating oil.

CAUTION

DO NOT use filter wrench for installation. Failure to follow this caution will result in damage to new filter.

3. Install oil filter elements (2) on oil cooler adapter (1) by hand until gaskets (3) touch oil cooler adapter.
4. Tighten oil filter elements (2) an additional 2/3 turn.
5. Check oil level and add oil if required (TM 9-2320-302-10).

END OF WORK PACKAGE

ENGINE OIL FILTERS MAINTENANCE (M915A3 NEW MODEL, M916A3, M917A2) 0027 00

THIS WORK PACKAGE COVERS

Element Removal, Cleaning, Element Installation

INITIAL SETUP

Tools and Special Tools

Tool kit, general mechanic's (Item 50, WP 0306 00)

Pan, drain (Item 29, WP 0306 00)

Wrench, strap (Item 54, WP 0306 00) (2)

Materials/Parts

Detergent, general purpose (Item 14, WP 0305 00)

Materials/Parts - Continued

Oil, lubricating (Item 23, WP 0305 00)

Rag, wiping (Item 31, WP 0305 00)

Equipment Condition

Engine warm (TM 9-2320-302-10)

Hood opened (TM 9-2320-302-10)

WARNING

- Some state and federal agencies have determined that used engine oil can be carcinogenic and can cause reproductive toxicity. Avoid inhalation of vapors, ingestion, and prolonged contact with used engine oil.
- Avoid direct contact of hot oil with your skin. Hot oil can cause serious burns.

NOTE

Ensure all oil spills are cleaned up.

ELEMENT REMOVAL

NOTE

Perform step 1 if engine is not already warm.

1. Operate engine until coolant temperature gage registers 140ºF (60ºC). Shut down engine (TM 9-2320-302-10).

NOTE

Perform steps 2 through 6 for each of two engine oil filters.

2. Remove either of two drain plugs (1) from oil filter bottom cap (3) and allow oil inside oil filter housing (2) to drain.

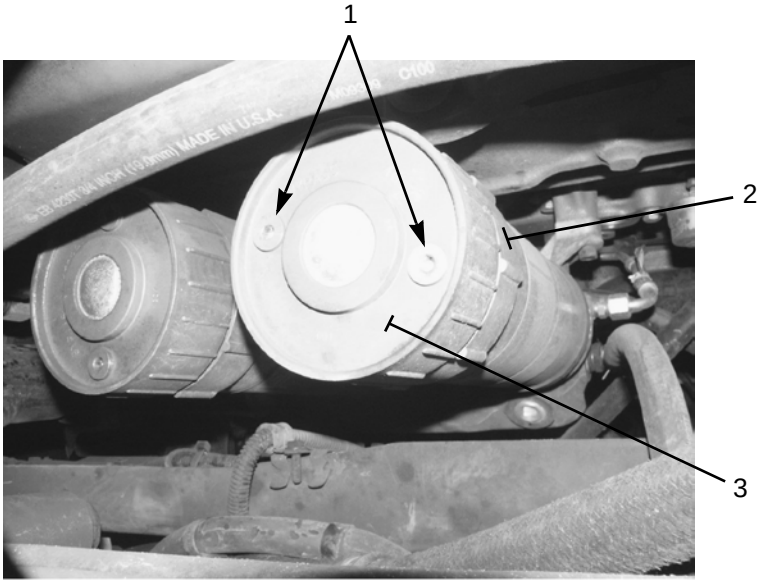

371-123

3. Remove bottom cap (3) assembly and filter element (9) from filter housing (2).
4. Remove plastic retainer (4), spring (5), and two o-rings (6 and 7) from bottom cap (3).
5. Remove o-ring (8) from drain plug (1).
6. Inspect filter element (9), spring (5), o-ring (8), and two o-rings (6 and 7) for damage. Replace if damaged.

ELEMENT REMOVAL - CONTINUED

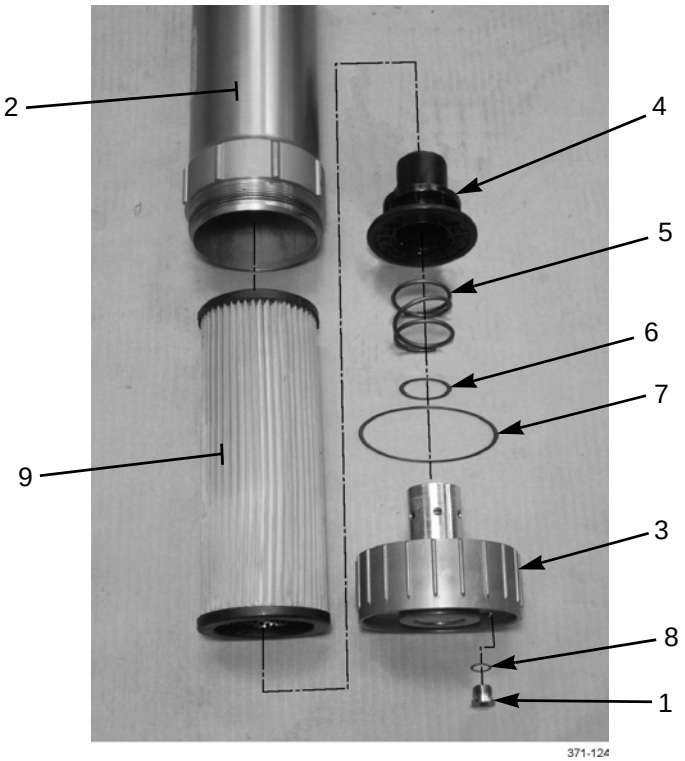

CLEANING

WARNING

- Compressed air used for cleaning or drying purposes, or for clearing restrictions, should never exceed 30 psi (207 kPa). Wear protective clothing (goggles/shield, gloves, etc.) and use caution to avoid injury to personnel.

1. Using detergent, clean filter elements, drain plugs, bottom caps, springs, and o-rings. Use a soft brush as necessary.
2. Dry components using rags and compressed air. Dry filter elements by directing compressed air from INSIDE filter element.

ELEMENT INSTALLATION

NOTE

Perform steps 1 through 3 for each of two engine oil filters.

1. Install o-ring (8) to drain plug (1) and install drain plug to bottom cap (3).
2. Install two o-rings (6 and 7), spring (5), and plastic retainer (4) to bottom cap (3).

CAUTION

DO NOT use a filter wrench to tighten bottom cap assembly or damage and leaks may result.

3. Install filter element (9) and bottom cap (3) assembly to filter housing (2) and tighten by hand.

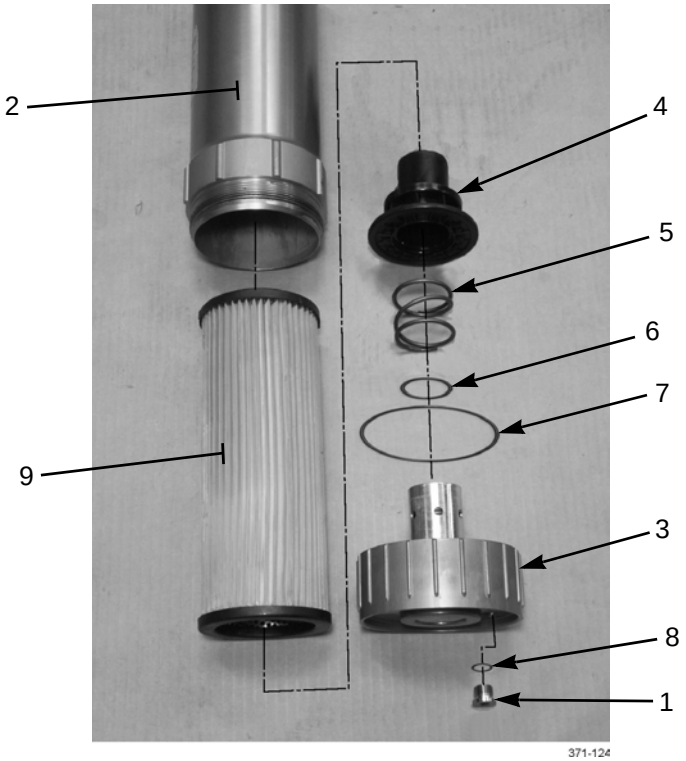

4. Check oil level and add oil if required (TM 9-2320-302-10).

END OF WORK PACKAGE

OIL PAN GUARD REPLACEMENT 0027 01

THIS WORK PACKAGE COVERS

Removal, Installation

INITIAL SETUP

Tools and Special Tools

Tool kit, general mechanic's (Item 50, WP 0306 00)

Wrench, torque, 15 - 75 lb-ft (Item 57, WP 0306 00)

Wrench, torque, 100 - 600 lb-ft (Item 59, WP 0306 00)

Equipment Conditions

Engine off (TM 9-2320-302-10)

Parking brake on (TM 9-2320-302-10)

Wheels blocked

REMOVAL

1. Remove two bolts (9), four washers (10) and two nuts (11) on front of oil pan guard (12).
2. On left strut (8) and right strut (1), remove four bolts (13), eight washers (14) and four nuts (15) and oil pan guard (12).
3. Remove one bolt (2), two washers (3), one nut (4), and right strut (1).
4. Remove two bolts (5), four washers (6), two nuts (7), and left strut (8).

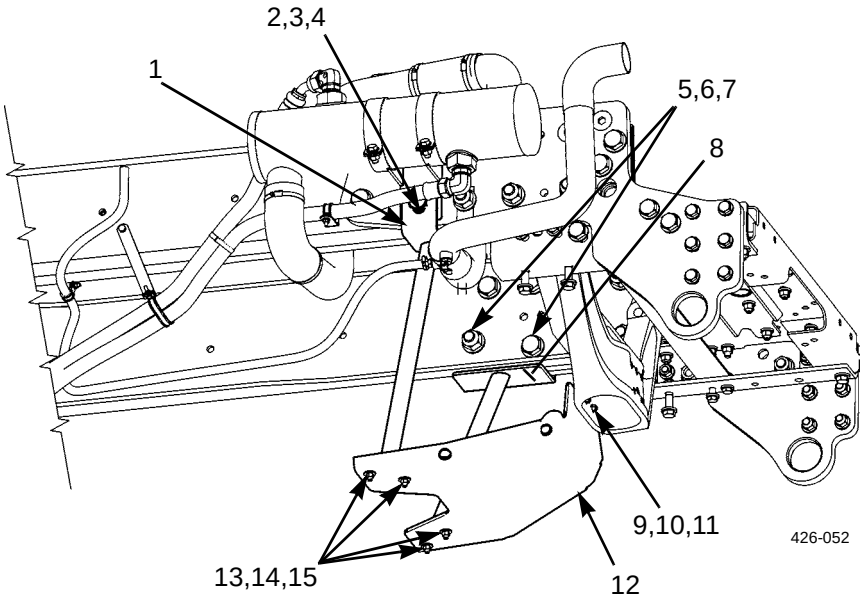

INSTALLATION

1. Position left strut (8) on left side of front bumper frame and handtighten two bolts (5), four washers (6) and two nuts (7).
2. Position right strut (1) on right side of front bumper frame and handtighten one bolt (2), two washers (3) and one nut (4).
3. Position oil pan guard (12) and handtighten four bolts (13), eight washers (14) and four nuts (15) on left strut (8) and right strut (1).
4. Handtighten two bolts (9), four washers (10) and two nuts (11) on front of oil pan guard (12).
5. Torque bolts (2 and 5) to 514 - 650 lb-ft.
6. Torque bolts (13) to 33 - 41 lb-ft.

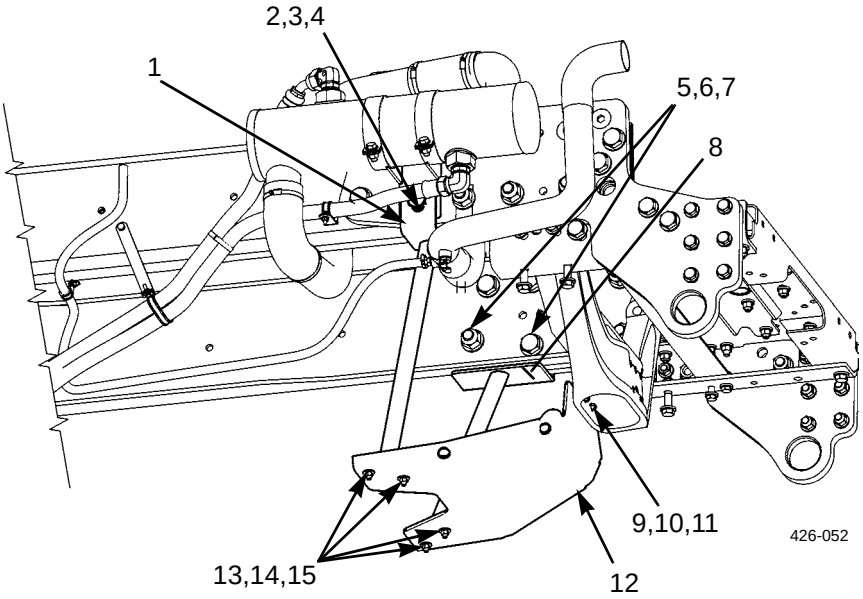

END OF WORK PACKAGE

OIL SAMPLE VALVES REPLACEMENT 0028 00

THIS WORK PACKAGE COVERS

Removal, Installation

INITIAL SETUP

Tools and Special Tools

Tool kit, general mechanic's (Item 50, WP 0306 00)

Materials/Parts

Nut, self-locking (P/N M45913/1-8CG5C))

Compound, sealing, pipe (Item 13, WP 0305 00)

NOTE

Engine and transmission oil sample valves are replaced the same way. Engine oil sample valve is illustrated.

REMOVAL

1. Disconnect hose (8) from connector (9).
2. Remove connector (9) and bushing (10) from oil cooler.
3. Remove hose (8) from adapter (1).
4. Remove adapter (1) and sample valve (3) from bracket (2).
5. Remove locknut (4), washer (5), screw (7), washer (6), and bracket (2) from mounting bracket (11). Discard locknut.

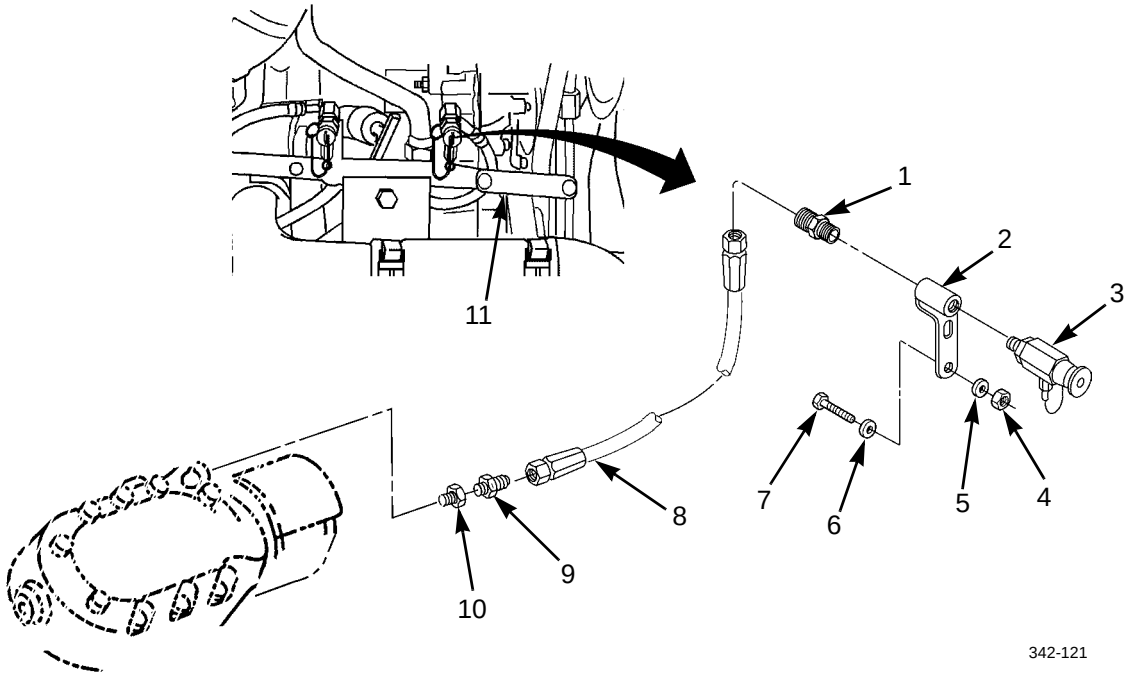

INSTALLATION

1. Install bracket (2) on mounting bracket (11) with washer (6), screw (7), washer (5), and new locknut (4).

WARNING

Adhesives and sealing compounds can burn easily, can give off harmful vapors, and are harmful to skin and clothing. To avoid injury or death, keep away from open fire and use in a well-ventilated area. If adhesive or sealing compound contacts skin or clothing, wash immediately with soap and water.

2. Lightly coat threads of sample valve (8) and adapter (1) with pipe sealing compound. Install sample valve and adapter on bracket (2).
3. Connect hose (8) to adapter (1).
4. Lightly coat threads of bushing (10) and connector (9) with pipe sealing compound. Install bushing and connector on oil cooler.
5. Connect hose (8) to connector (9).

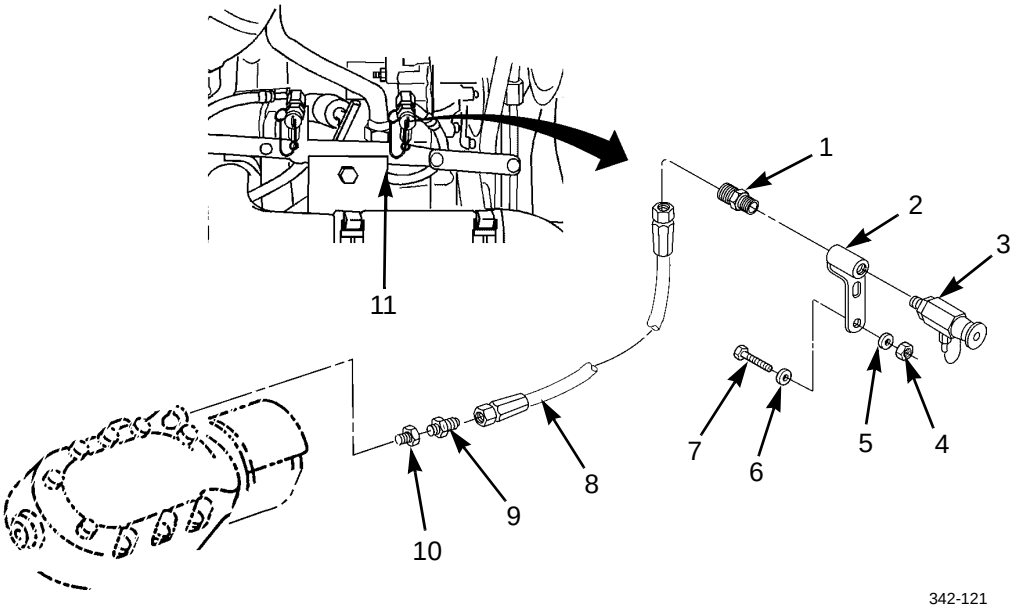

END OF WORK PACKAGE

AIR COMPRESSOR DISCHARGE HOSE REPLACEMENT 0029 00

THIS WORK PACKAGE COVERS

Removal, Installation

INITIAL SETUP

Tools and Special Tools

Tool kit, general mechanic's (Item 50, WP 0306 00)

Materials/Parts

Nut, lock (P/N M45913/1-4CG5C)

References

TM 9-2320-302-10

Equipment Condition

Air system drained (TM 9-2320-302-10)

Transmission tunnel access cover removed (WP 0268 00)

REMOVAL

1. Remove discharge hose (2) from air compressor elbow fitting (1).
2. Remove locknut (15), screw (4), two washers (3), and clamp (17) from mounting bracket (16). Discard locknut.
3. Remove screw (14), washer (13), and mounting bracket (16) from engine block (5).
4. Remove nut (10), washer (11), and two hose clamps (7 and 12) from standoff bracket (6).
5. Reinstall hose clamp (12) on standoff bracket (6) with washer (11) and nut (10).

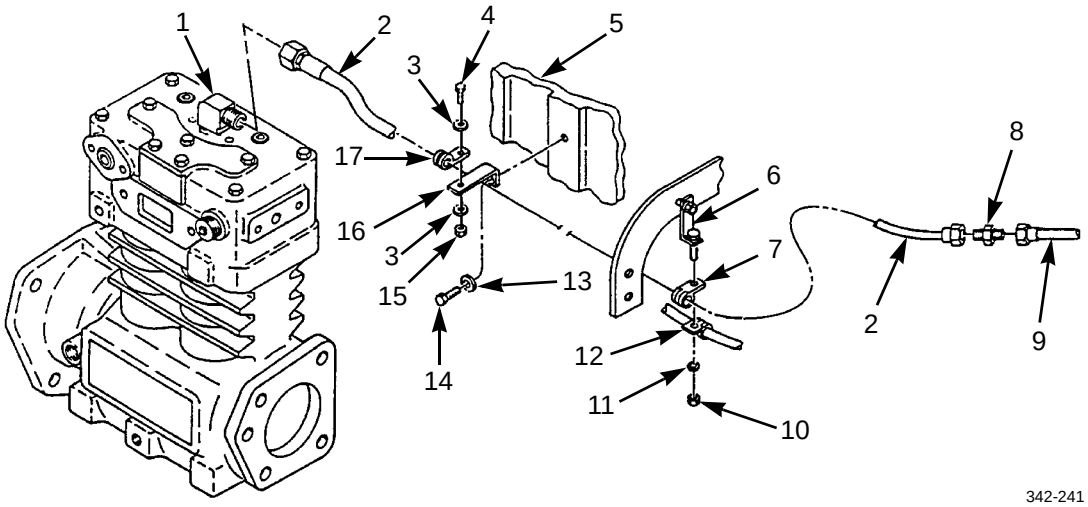

NOTE

Discharge hose from compressor to air dryer is routed in a continuous downward slope to prevent collection of moisture in line. Hose clamps, secured to standoff mounting brackets at 12-20 in (30-51 cm) intervals, are used to secure compressor discharge hose and other hoses in place. Replace damaged standoff bracket as required.

6. Remove discharge hose (2) and inline fitting (8) from air dryer hose (9).

INSTALLATION

1. Install inline fitting (8) and discharge hose (2) on air dryer hose (9).

NOTE

Replace defective or damaged hose clamps and standoff mounting brackets as necessary to ensure discharge hose maintains a downward slope from compressor to air dryer.

2. Remove nut (10), washer (11), and hose clamp (12) from standoff bracket (6).
3. Install two hose clamps (7 and 12) on standoff bracket (6) with washer (11) and nut (10).
4. Install mounting bracket (16) on engine block (5) with washer (13) and screw (14).
5. Install hose clamp (17), with discharge hose (2) attached, on mounting bracket (16) with two washers (3), screw (4), and new locknut (15).
6. Install air compressor discharge hose (2) on air compressor elbow fitting (1).

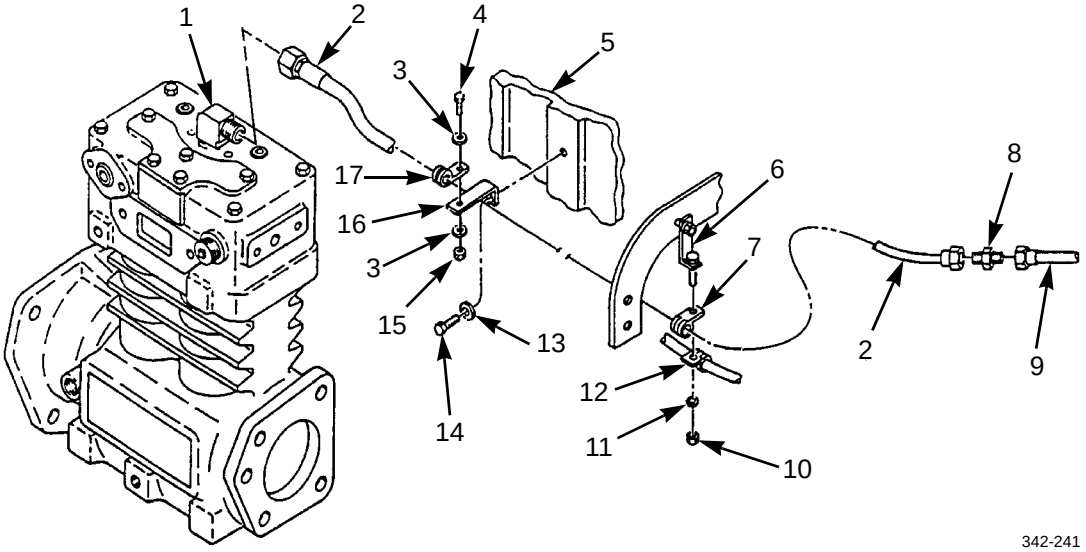

7. Install transmission tunnel access cover (WP 0268 00).

END OF WORK PACKAGE

AIR COMPRESSOR GOVERNOR REPLACEMENT AND ADJUSTMENT 0030 00

THIS WORK PACKAGE COVERS

Removal, Installation, Adjustment

INITIAL SETUP

Tools and Special Tools

Tool kit, general mechanic's (Item 50, WP 0306 00)

Materials/Parts

Compound, sealing, pipe (Item 13, WP 0305 00)

Rags, wiping (Item 31, WP 0305 00)

Tags, marker (Item 34, WP 0305 00)

Gasket (P/N 236577)

Washer, lock (P/N MS35338-140) (2)

Personnel Required

Two

References

TM 9-2320-302-10

Equipment Condition

Air system drained (TM 9-2320-302-10)

REMOVAL

NOTE

Tag lines to an aid in installation.

1. Remove two lines (4) from elbows (3).
2. Remove two screws (5), lockwashers (6), governor (2), and gasket (1) from air compressor. Discard lockwashers and gasket.
3. Remove two elbows (3) from governor (2).

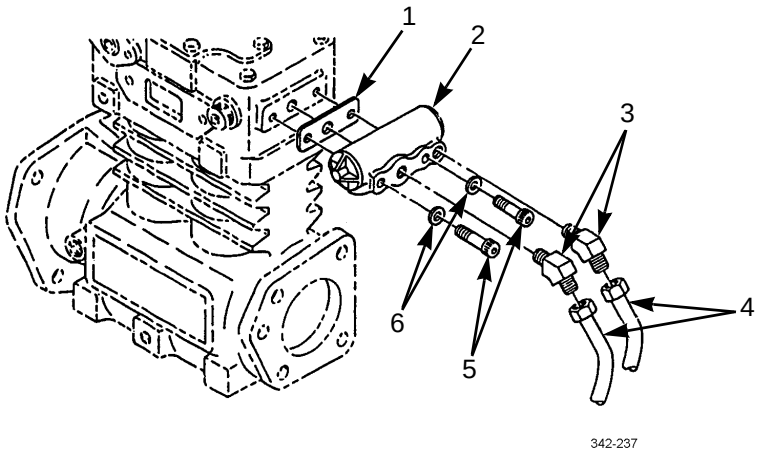

INSTALLATION


WARNING

- Adhesives and sealing compounds can burn easily, can give off harmful vapors, and are harmful to skin and clothing. To avoid injury or death, keep away from open fire and use in a well-ventilated area. If adhesive or sealing compound contacts skin or clothing, wash immediately with soap and water.
- Ensure that all air lines and fittings are free of debris and excess pipe sealing compound does not enter air lines or fittings. Failure to follow this warning could result in injury to personnel and damage to equipment.

1. Lightly coat threads of two elbows (3) with pipe sealing compound. Install elbows in governor (2).
2. Install new gasket (1) and governor (2) on compressor with two new lockwashers (6) and screws (5).
3. Install two air lines (4) on elbows (3).

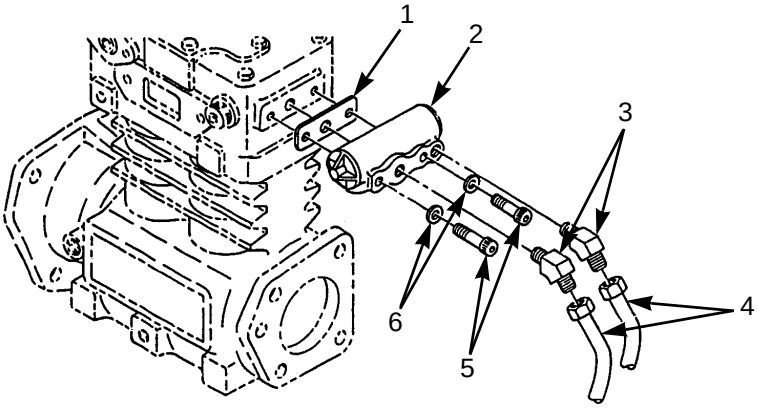

342-237

NOTE

Perform step 4 through 6 to verify correct operation of air compressor and governor.

4. Start vehicle (TM 9-2320-302-10). Check for air leaks.
5. Check air pressure gages when governor cuts out, stopping compression of air by compressor. Cut-out pressure should be 120 psi (793 kPa) or 125 psi (862 kPa) for CTIS equipped vehicles.
6. With engine running, make a series of brake applications to reduce air pressure. Observe air pressure gages when governor cuts in compressor. Cut-in pressure should be 95-100 psi (655-690 kPa).

NOTE

Air pressure operating range is 90-120 psi (621-827 kPa). If air pressure gages do not indicate within operating range, governor requires adjustment.

ADJUSTMENT

1. Remove cover (7) from governor (2).
2. Loosen adjusting screw locknut (9).

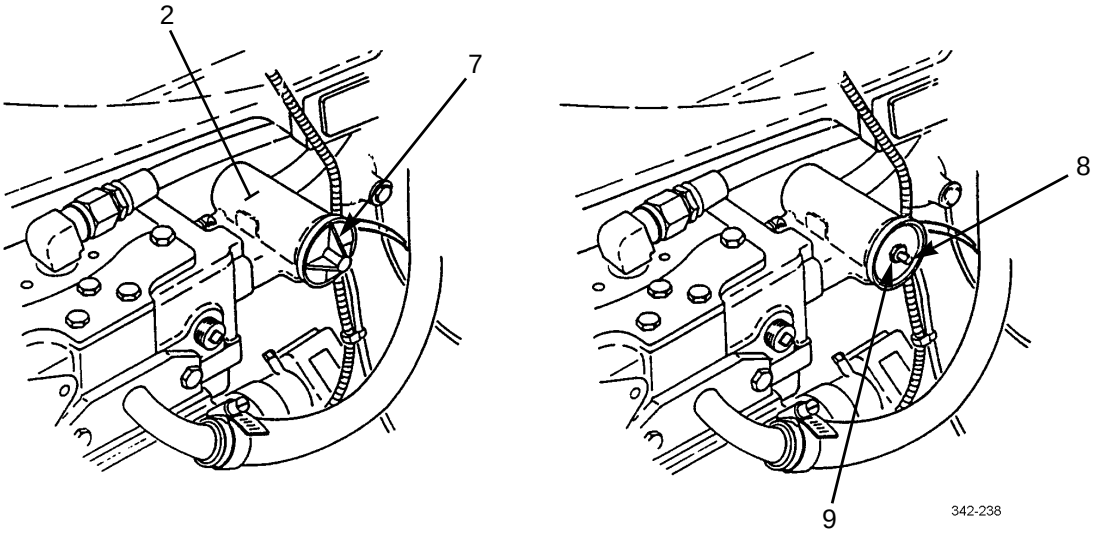

NOTE

Pressure range between compressor cut-in and cut-out is not adjustable. To raise pressure settings, turn adjusting screw counterclockwise. To lower pressure settings, turn adjusting screw clockwise.

3. While assistant monitors primary pressure gage, turn adjusting screw (8) until proper cut-out pressure is obtained. When proper pressure is reached, tighten adjusting screw locknut (9).
4. Install cover (7) on governor (2).

END OF WORK PACKAGE

AIR COMPRESSOR REPLACEMENT 0031 00

THIS WORK PACKAGE COVERS

Removal, Installation

INITIAL SETUP

Tools and Special Tools

Tool kit, general mechanic's (Item 50, WP 0306 00)

Wrench, torque, 0-300 lb-in (Item 56, WP 0306 00)

Wrench, torque, 15-75 lb-ft (Item 57, WP 0306 00)

Wrench, torque, 50-250 lb-ft (Item 58, WP 0306 00)

Materials/Parts

Gasket (P/N 243430)

Gasket (P/N 8929299)

Washer, lock (P/N MS35338-45) (2)

Compound, sealing, pipe (Item 13, WP 0305 00)

Grease, GAA (Item 18, WP 0305 00)

Personnel Required

Two

Equipment Condition

Cooling system drained (WP 0046 00)

Power steering reservoir and hose removed (WP 0221 00)

Fuel pump removed (WP 0038 00)

Air compressor governor removed (WP 0030 00)

REMOVAL

1. Loosen hose clamp (2) and remove air inlet hose (3) from pipe flange (1).
2. Remove air supply hose (5) from elbow (4).

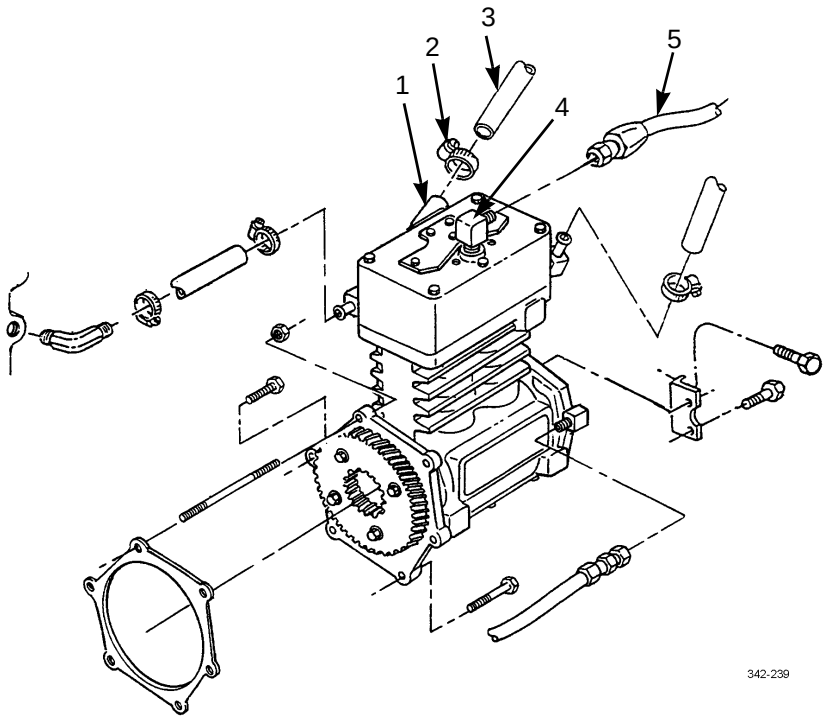

REMOVAL - CONTINUED

3. Remove oil supply hose (19) from elbow (18).
4. Loosen hose clamp (13) and remove coolant outlet hose (12) from elbow (14).
5. Loosen two hose clamps (8) and remove coolant inlet hose (9) from elbows (7 and 10).
6. Remove elbow (7) from engine block (6).
7. Remove two bolts (15), bolts (16), and support bracket (17) from air compressor (11).
8. Remove bolt (23) and four bolts (20) from air compressor (11).

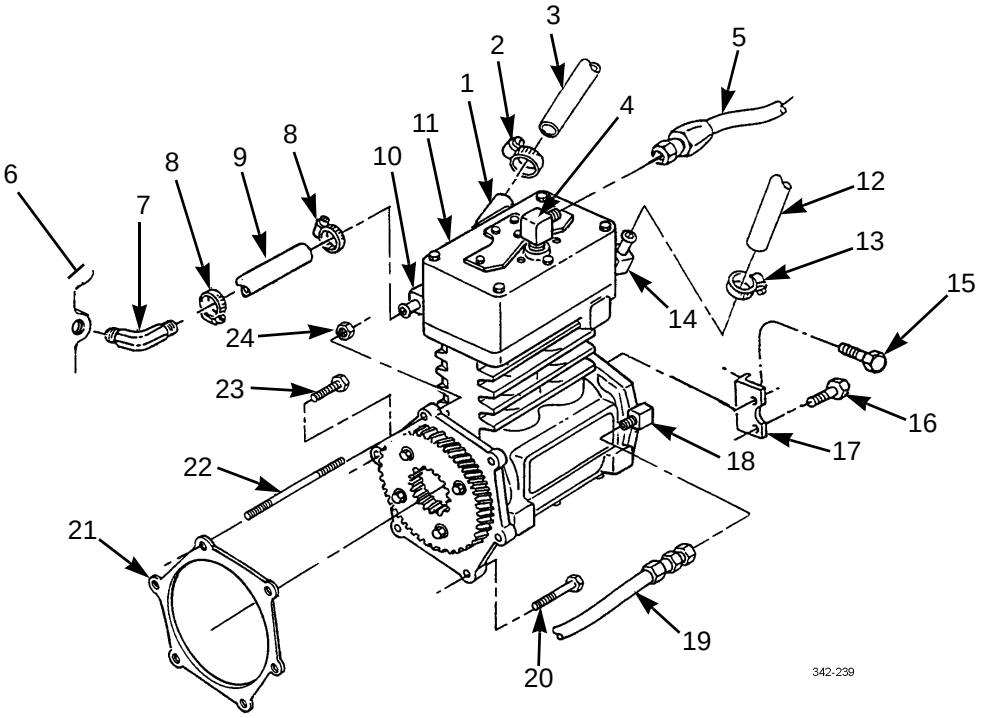

WARNING

Air compressor is heavy. Use caution during removal to prevent injury to personnel.

9. With assistance, support air compressor (11) and remove nut (24) from threaded stud (22).
10. Remove air compressor (11) and gasket (21) by sliding air compressor rearward off of threaded stud (22). Discard gasket.
11. Remove four elbows (4, 10, 14, and 18) from air compressor (11).
12. Remove two bolts (25), lockwashers (26), pipe flange (1), and gasket (27) from air compressor (11). Discard lockwashers and gasket.

REMOVAL - CONTINUED

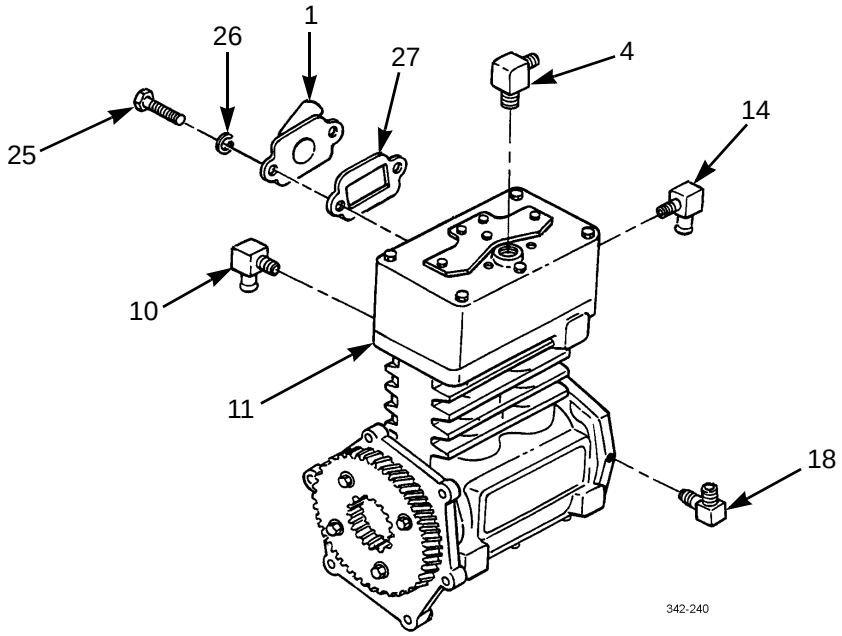

INSTALLATION

- Adhesives and sealing compounds can burn easily, can give off harmful vapors, and are harmful to skin and clothing. To avoid injury or death, keep away from open fire and use in a well-ventilated area. If adhesive or sealing compound contacts skin or clothing, wash immediately with soap and water.
- Ensure that all air lines and fittings are free of debris and excess pipe sealing compound does not enter air lines or fittings. Failure to follow this warning could result in injury to personnel and damage to equipment.

1. Lightly coat pipe threads of elbows (4, 10, 14, and 18) with pipe sealing compound. Install elbows on air compressor (11).
2. Install new gasket (27) and pipe flange (1) on air compressor (11) with two new lockwashers (26) and bolts (25). Torque bolts to 156-204 lb-in (18-23 Nm).
3. Apply a light coat of grease to bolt hole locations on new gasket (21). Install gasket on air compressor (11).

INSTALLATION - CONTINUED

WARNING

Air compressor is heavy. Use caution during installation to prevent injury to personnel.

4. Slide air compressor (11) over threaded stud (22) and install nut (24). Hand tighten nut.
5. Install four bolts (20) and one bolt (23) on air compressor (11). Hand tighten bolts.
6. Torque nut (24), four bolts (20), and bolt (23) to 75-93 lb-ft (101-126 Nm).
7. Install support bracket (17) on air compressor (11) with two bolts (15). Hand tighten bolts.
8. Install two bolts (16) and torque to 43-45 lb-ft (58-73 Nm).
9. Torque two bolts (15) to 156-204 lb-in (18-23 Nm).
10. Install elbow (7) on engine block (6).
11. Slide two hose clamps (8) on coolant inlet hose (9) and position coolant inlet hose on elbows (7 and 10).
12. Slide one hose clamp (8) to each end of coolant inlet hose (9) and tighten.
13. Install oil supply hose (19) on elbow (18).
14. Slide hose clamp (13) on coolant outlet hose (12) and install coolant outlet hose on elbow (14). Tighten hose clamp.
15. Slide hose clamp (2) on air inlet hose (3) and install air inlet hose on pipe flange (1). Tighten hose clamp.
16. Install air supply hose (5) on elbow (4).

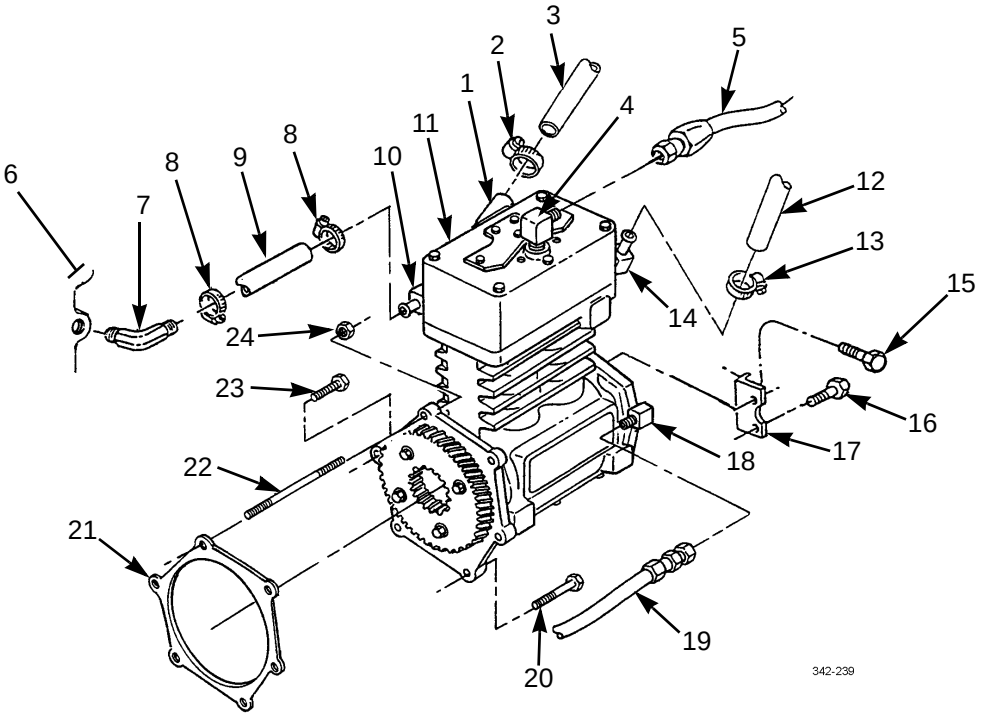

INSTALLATION - CONTINUED

17. Install air compressor governor (WP 0030 00).
18. Install fuel pump (WP 0038 00).
19. Install power steering reservoir and hose (WP 0221 00).
20. Fill cooling system (WP 0046 00).

END OF WORK PACKAGE

FUEL HOSES AND FITTINGS REPLACEMENT (M915A3 OLD MODEL) 0032 00

THIS WORK PACKAGE COVERS

Removal, Installation

INITIAL SETUP

Tools and Special Tools

Tool kit, general mechanic's (Item 50, WP 0306 00)

Pan, drain (Item 29, WP 0306 00)

Materials/Parts

Nut, lock (P/N 23-09900-104)

Compound, sealing, pipe (Item 13, WP 0305 00)

Materials/Parts - Continued

Tags, marker (Item 34, WP 0305 00)

References

TM 9-2320-302-10

Equipment Condition

Transmission tunnel access cover removed (WP 0268 00)

WARNING

- DO NOT perform fuel system checks, inspections or maintenance while smoking or near fire, flames or sparks. Fuel may ignite, causing damage to vehicle and injury or death to personnel.
- Personnel must wear fuel-resistant gloves when handling fuels. If exposed to fuel, promptly wash exposed skin and change fuel-soaked clothing.

REMOVAL

NOTE

- Ensure that drain pan is positioned to catch fuel from fuel hoses. Ensure that all spills are cleaned up.
- Tag all fuel lines and hoses to aid in installation.

1. Remove fuel hose (2) from fuel tank (3).
2. Remove locknut (5), screw (9), washer (8), clamp (4), and clamp (6) from transmission dipstick tube (7). Discard locknut.
3. Remove fuel hose (2) from check valve (1).

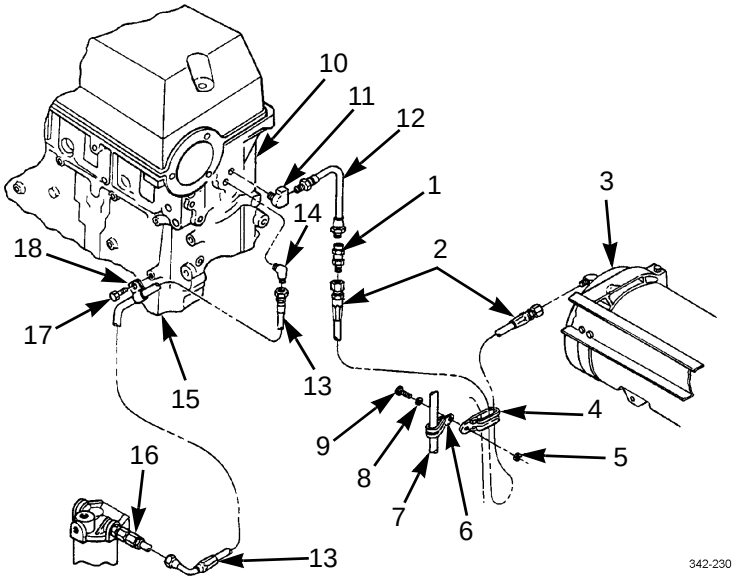

CAUTION

Elbow is a special orifice and should be handled carefully. Failure to follow this caution may result in damage to equipment.

4. Remove fuel line (12) and special elbow (11) from cylinder head (10).
5. Remove check valve (1) from fuel line (12).
6. Disconnect fuel hose (13) and elbow (14) from cylinder head (10).
7. Remove screw (17) and clamp (18) from engine block (15).
8. Remove fuel hose (13) from check valve (16).
9. Remove fuel hose (25) from fuel tank (3) and from primary fuel filter (26).
10. Remove fuel hose (24) from primary fuel filter (26) and fuel pump (19).
11. Remove fuel hose (20) from fuel pump (19) and secondary fuel filter (23).
12. Disconnect fuel hoses (21 and 22) from secondary fuel filter (23).

REMOVAL - CONTINUED

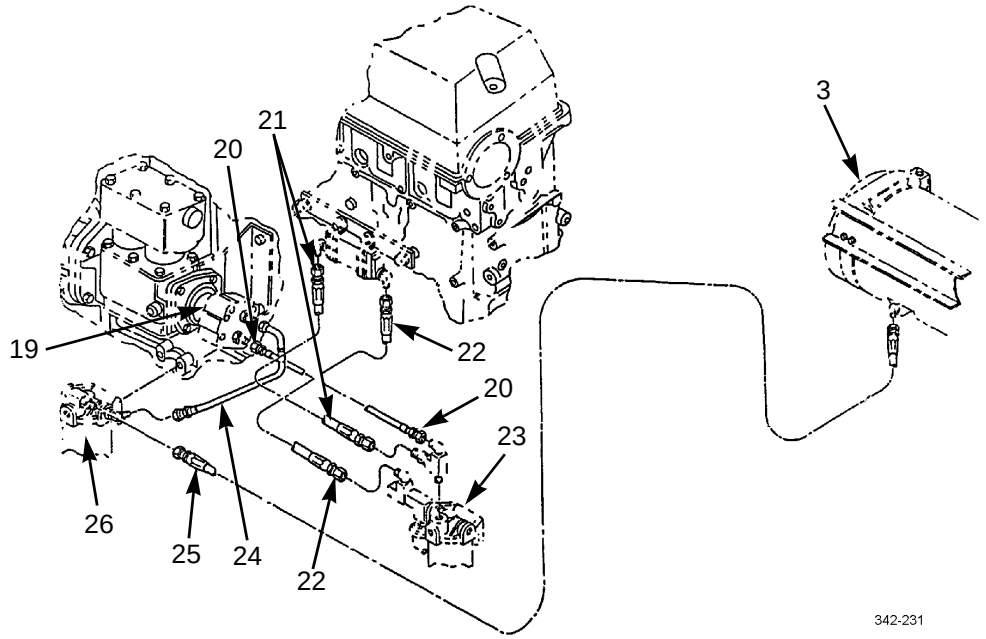

INSTALLATION

1. Install fuel hoses (21 and 22) on secondary fuel filter (23).
2. Install fuel hose (20) to secondary fuel filter (23) and fuel pump (19).
3. Install fuel hose (24) to fuel pump (19) and primary fuel filter (26).
4. Install fuel hose (25) to primary fuel filter (26) and fuel tank (3).
5. Install fuel hose (13) on check valve (16).
6. Install fuel hose (13) to engine block (15) with clamp (18) and screw (17).


WARNING

Adhesives and sealing compounds can burn easily, can give off harmful vapors, and are harmful to skin and clothing. To avoid injury or death, keep away from open fire and use in a well-ventilated area. If adhesive or sealing compound contacts skin or clothing, wash immediately with soap and water.

7. Lightly coat threads of elbow (14) with pipe sealing compound. Install elbow on cylinder head (10).
8. Install fuel hose (13) on elbow (14).
9. Install check valve (1) on fuel line (12).

INSTALLATION - CONTINUED



WARNING

Adhesives and sealing compounds can burn easily, can give off harmful vapors, and are harmful to skin and clothing. To avoid injury or death, keep away from open fire and use in a well-ventilated area. If adhesive or sealing compound contacts skin or clothing, wash immediately with soap and water.

10. Lightly coat threads of special elbow (11) and fuel line (12) with pipe sealing compound. Install special elbow and fuel line on cylinder head (10).

11. Install fuel hose (2) on check valve (1).

12. Install fuel hoses (2 and 25) on transmission dipstick tube (7) with clamps (4 and 6), washer (8), screw (9), and new locknut (5).

13. Install fuel hose (2) on fuel tank (3).

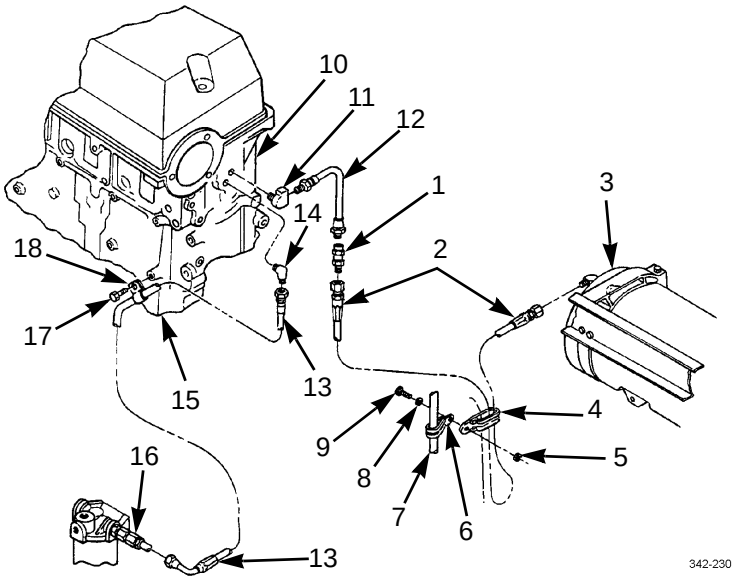

14. Install transmission tunnel access cover (WP 0268 00).

15. Prime fuel system (TM 9-2320-302-10).

16. Start engine and check for leaks (TM 9-2320-302-10).

END OF WORK PACKAGE

FUEL HOSES, FITTINGS, AND FUEL RETURN COOLER REPLACEMENT (M915A3 NEW MODEL, M916A3, M917A2) 0033 00

THIS WORK PACKAGE COVERS

Fuel Tank-to-Primary Fuel Filter Supply Hose: Removal, Installation; Fuel Return Hose: Removal, Installation; Primary Fuel Filter-to-Fuel Pump Supply Hose: Removal, Installation; Bypass Hose: Removal, Installation; Fuel Pump-to-Secondary Fuel Filter Fuel Hose: Removal, Installation; Secondary Fuel Filter-to-Engine Fuel Hose and Tube: Removal, Installation, Fuel Return Cooler (M916A3, M917A2): Removal, Installation.

INITIAL SETUP

Tools and Special Tools

Tool kit, general mechanic's (Item 50, WP 0306 00)

Pan, drain (Item 29, WP 0306 00)

Materials/Parts

Rag, wiping (Item 31, WP 0305 00)

Straps, tiedown (Item 33, WP 0305 00)

Tags, marker (Item 34, WP 0305 00)

Materials/Parts - Continued

Nut, lock (P/N 23-09900-104) (4)

References

TM 9-2320-302-10

Equipment Condition

Transmission tunnel access cover removed (WP 0268 00)

WARNING

- DO NOT perform fuel system checks, inspections or maintenance while smoking or near fire, flames or sparks. Fuel may ignite, causing damage to vehicle and injury or death to personnel.
- Personnel must wear fuel-resistant gloves when handling fuels. If exposed to fuel, promptly wash exposed skin and change fuel-soaked clothing.

NOTE

- Use a drain pan to catch residual fuel in hoses when fuel hoses are disconnected. Ensure all spills are cleaned up.
- If replacing more than one fuel hose at a time, tag hoses to ensure correct installation.
- Remove and discard tiedown straps as necessary. Use new tiedown straps on installation.

FUEL TANK-TO-PRIMARY FUEL FILTER SUPPLY HOSE REMOVAL

1. Close fuel shut-off valve (1).

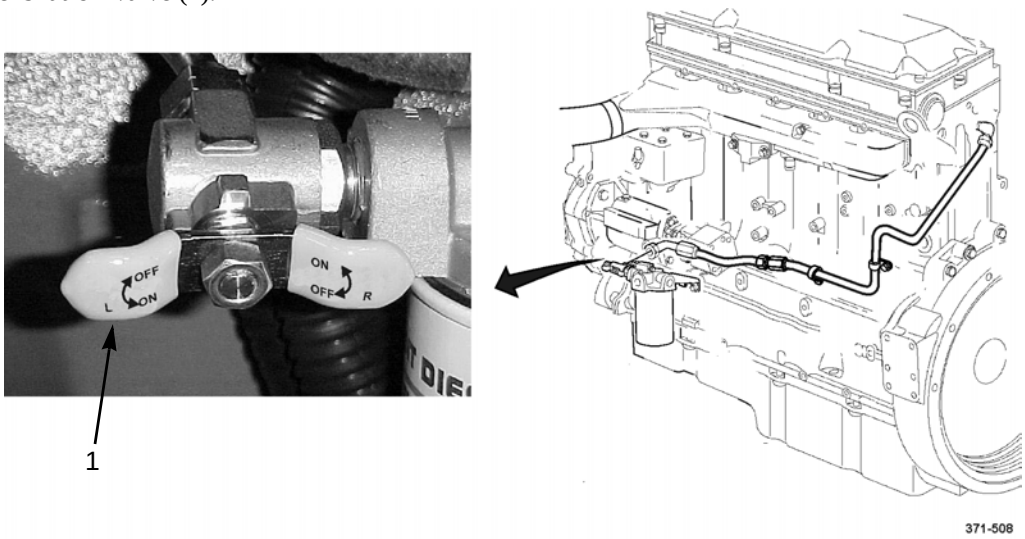

2. At top of fuel tank (2), disconnect fuel supply hose (4) from elbow (3).
3. Remove elbow (3) from fuel tank (2).

NOTE

Perform step 4 at four places along fuel tank-to-primary fuel filter supply hose.

4. Remove locknut (5), two washers (6), screw (7), and clamp (8) from fuel supply hose (4). Discard locknut.
5. At primary fuel filter (12), remove cable tie (9) from fuel supply hose (4) and bypass hose (10). Discard cable tie.
6. Disconnect fuel supply hose (4) from elbow (11) and remove fuel supply hose from vehicle.
7. Remove elbow (11) from primary fuel filter (12).

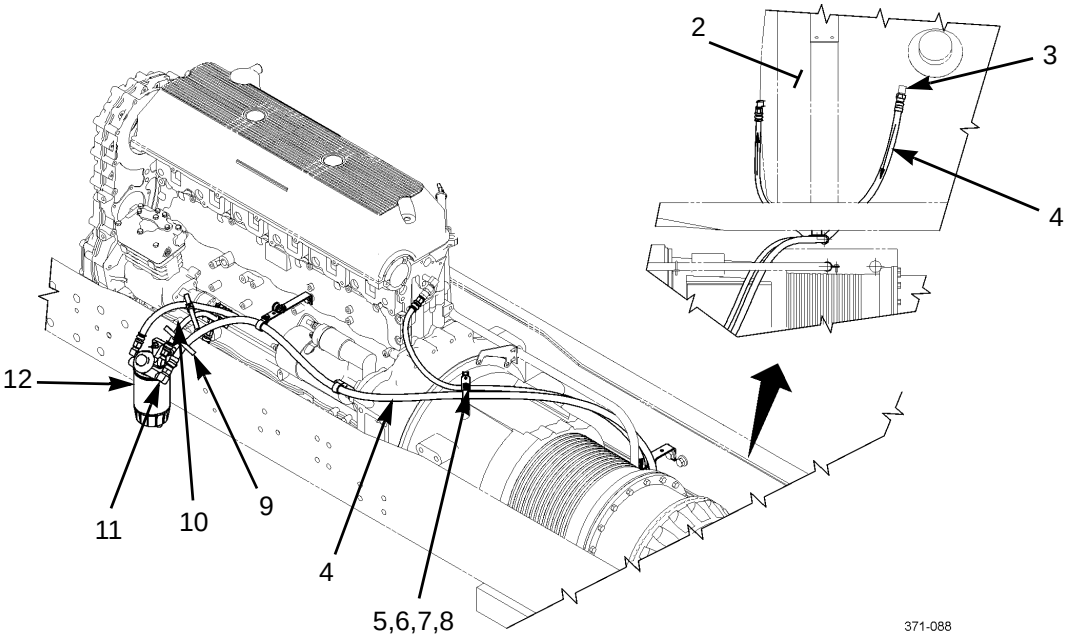

FUEL TANK-TO-PRIMARY FUEL FILTER SUPPLY HOSE INSTALLATION

1. At primary fuel filter (12), install elbow (11).
2. Position fuel supply hose (4) to vehicle and connect fuel supply hose to elbow (11).
3. At primary fuel filter (12), install new cable tie (9) to fuel supply hose (4) and bypass hose (10).

NOTE

Perform step 4 at four places along fuel tank-to-primary fuel filter supply hose.

4. Install clamp (8) to fuel supply hose (4) with screw (7), two washers (6), and new locknut (5).
5. At top of fuel tank (2), install elbow (3).
6. Connect fuel supply hose (4) to elbow (3).
7. Open fuel shut-off valve (1).
8. Prime fuel system (TM 9-2320-302-10).
9. Start engine (TM 9-2320-302-10) and check for fuel leaks.
10. Install transmission tunnel access cover (WP 0268 00).

FUEL RETURN HOSE REMOVAL

1. Close fuel shut-off valve (1).

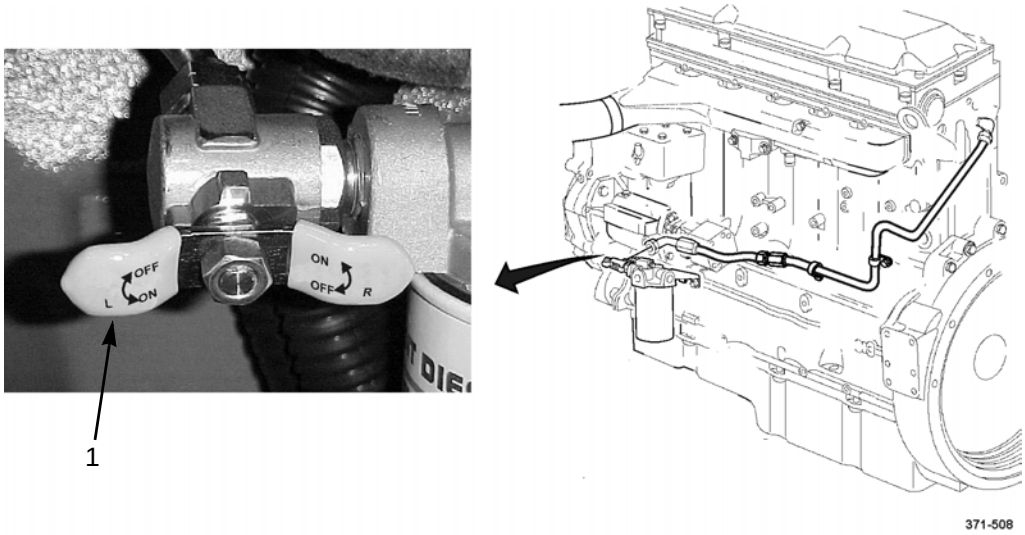

2. At front of fuel tank (2), disconnect fuel return hose (17) from elbow (16).
3. Remove elbow (16) from fuel tank (2).

NOTE

Perform step 4 at two places along fuel return hose.

4. Remove clamp (15) from fuel return hose (17).
5. At rear of engine, disconnect fuel return hose (17) from check valve (18) and remove fuel return hose from vehicle.
6. Remove check valve (18), elbow (14), and pipe nipple (13) from rear of engine.

FUEL RETURN HOSE REMOVAL - CONTINUED

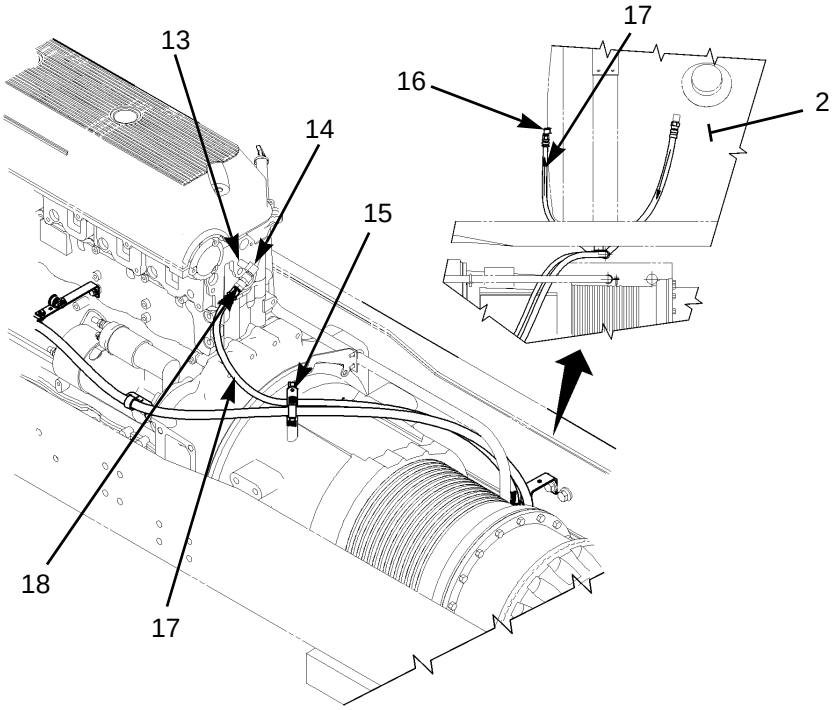

FUEL RETURN HOSE INSTALLATION

1. At rear of engine, install pipe nipple (13), elbow (14), and check valve (18).
2. Position fuel return hose (17) to vehicle and connect fuel return hose to check valve (18).

NOTE

Perform step 3 at two places along fuel return hose.

3. Position clamp (15) around fuel return hose (17).
4. At front of fuel tank (2), install elbow (16).
5. Connect other end of fuel return hose (17) to elbow (16).
6. Open fuel shut-off valve (1).
7. Prime fuel system (TM 9-2320-302-10).
8. Start engine (TM 9-2320-302-10) and check for fuel leaks.
9. Install transmission tunnel access cover (WP 0268 00).

PRIMARY FUEL FILTER-TO-FUEL PUMP SUPPLY HOSE REMOVAL

1. Close fuel shut-off valve (1).

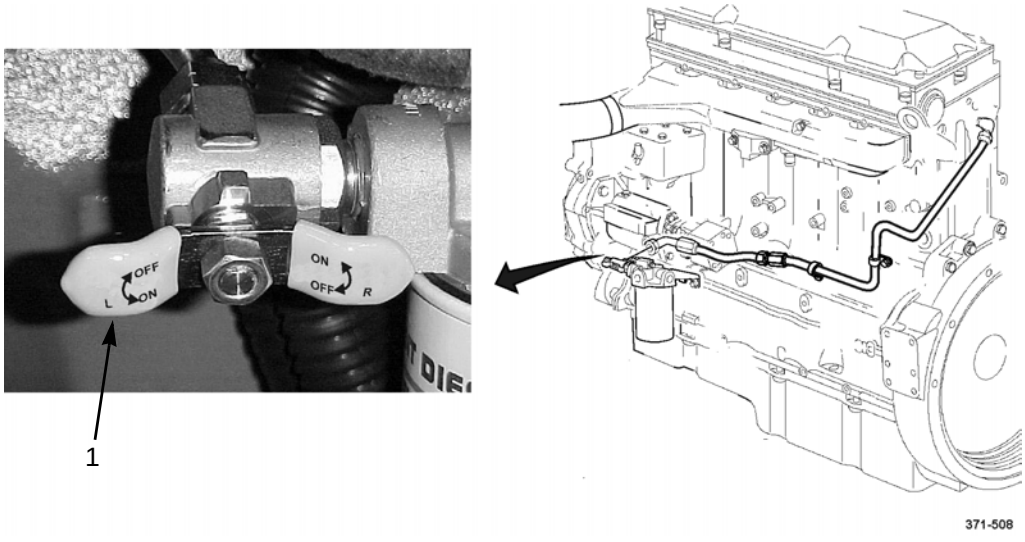

2. At primary fuel filter (12), disconnect fuel supply hose (19) from elbow (21).
3. Remove elbow (21) from primary fuel filter (12).
4. Remove cable tie (20) from fuel supply hose (19) and bypass hose (10). Discard cable tie.

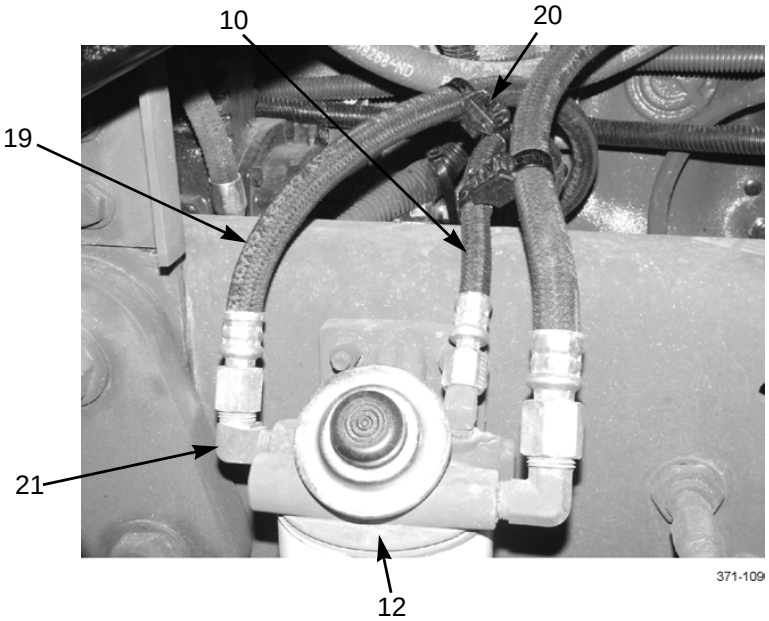

5. At rear of fuel pump (22), disconnect fuel supply hose (19) from adapter (23) and remove fuel supply hose from vehicle.
6. Remove adapter (23) from fuel pump (22).

PRIMARY FUEL FILTER-TO-FUEL PUMP SUPPLY HOSE REMOVAL - CONTINUED

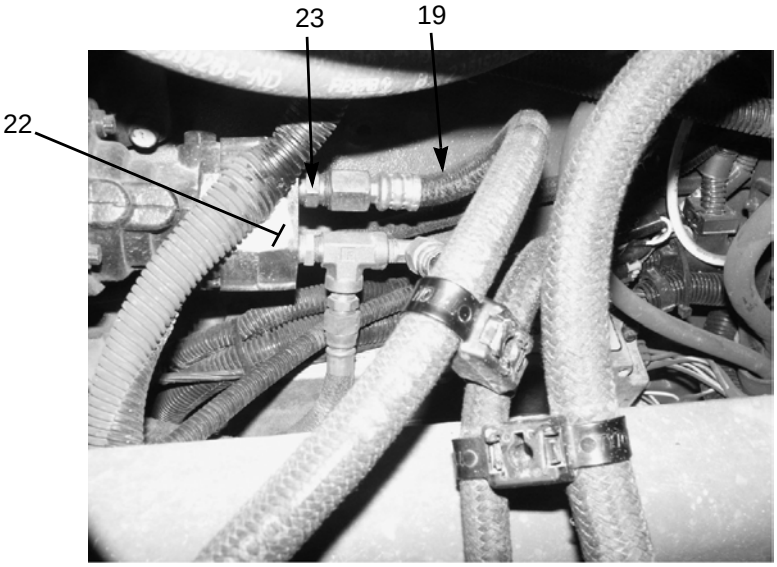

PRIMARY FUEL FILTER-TO-FUEL PUMP SUPPLY HOSE INSTALLATION

1. Install adapter (23) to rear of fuel pump (22).
2. Connect fuel supply hose (19) to adapter (23).
3. Install elbow (21) to primary fuel filter (12).
4. Connect other end of fuel supply hose (19) to elbow (21).
5. Install new cable tie (20) to fuel supply hose (19) and bypass hose (10).
6. Open fuel shut-off valve (1).
7. Prime fuel system (TM 9-2320-302-10).
8. Start engine (TM 9-2320-302-10) and check for fuel leaks.

BYPASS HOSE REMOVAL

1. Close fuel shut-off valve (1).

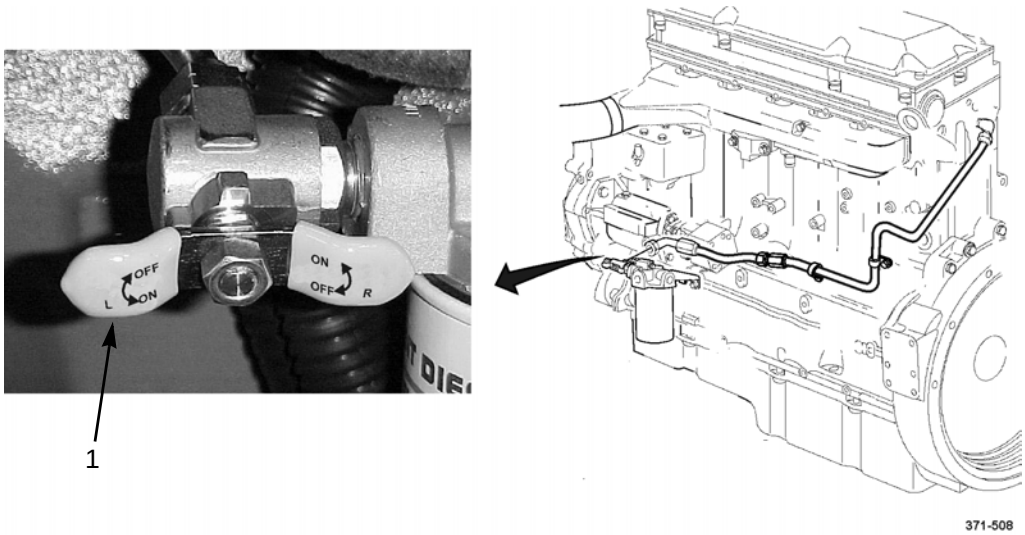

2. At primary fuel filter (12), disconnect bypass hose (10) from elbow (24).
3. Remove elbow (24) from primary fuel filter (12).
4. Remove two cable ties (9 and 20) from bypass hose (10), fuel supply hose (4), and fuel supply hose (19). Discard cable ties.

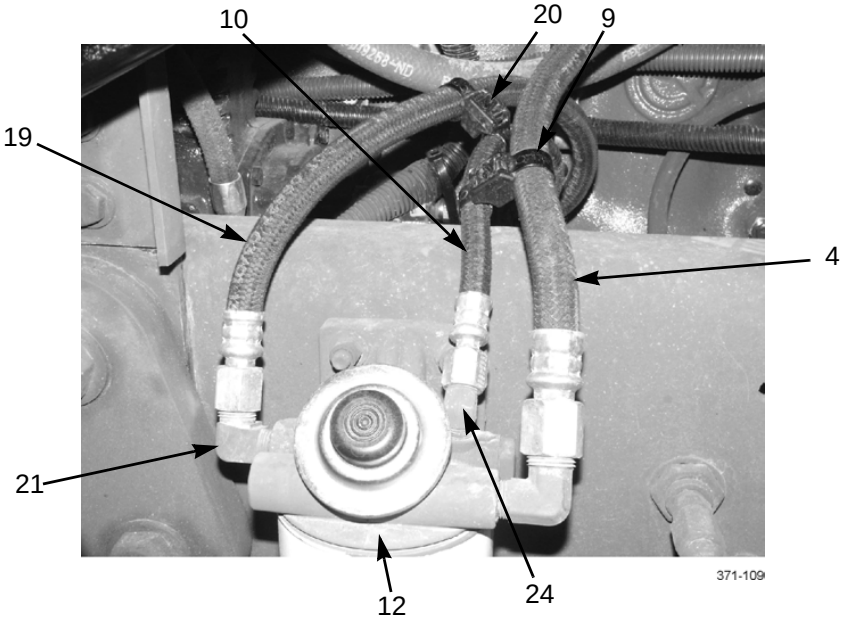

5. At rear of fuel pump (22), disconnect other end of bypass hose (10) from elbow (26) and remove bypass hose from vehicle.
6. Remove elbow (26) from tee (25) at fuel pump (22).

BYPASS HOSE REMOVAL - CONTINUED

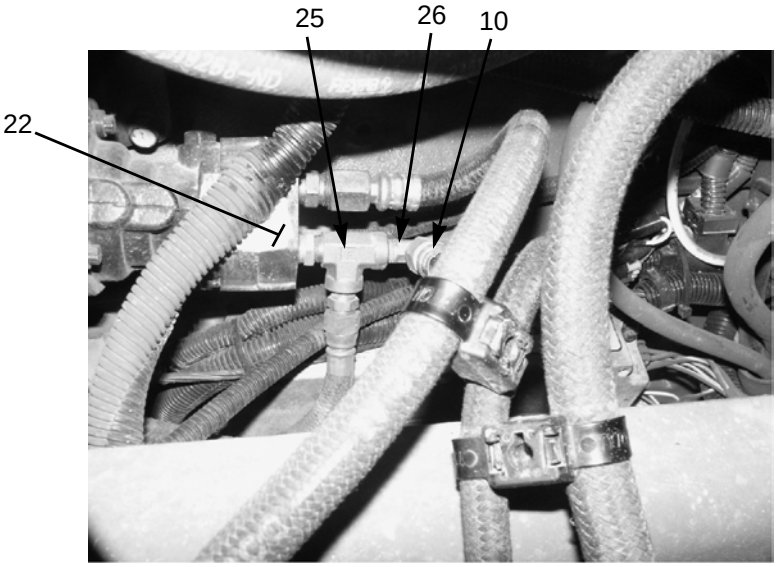

BYPASS HOSE INSTALLATION

1. Install elbow (26) to tee (25) at rear of fuel pump (22).
2. Connect bypass hose (10) to elbow (26).
3. At primary fuel filter (12), install elbow (24).
4. Connect other end of bypass hose (10) to elbow (24).
5. Install two new cable ties (9 and 20) to bypass hose (10), fuel supply hose (19), and fuel supply hose (4).
6. Open fuel shut-off valve (1).
7. Prime fuel system (TM 9-2320-302-10).
8. Start engine (TM 9-2320-302-10) and check for fuel leaks.

FUEL PUMP-TO-SECONDARY FUEL FILTER FUEL HOSE REMOVAL

1. Close fuel shut-off valve (1).

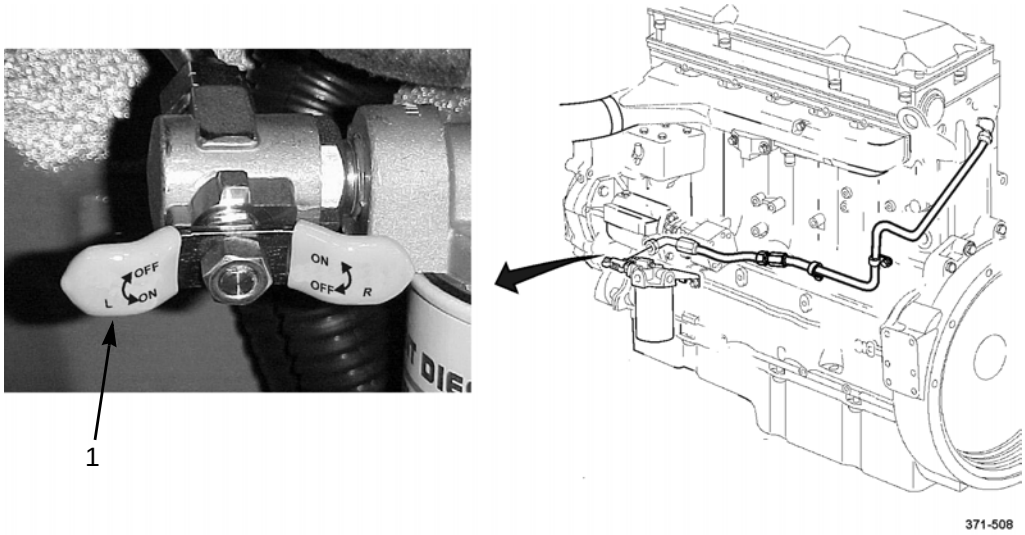

2. Disconnect fuel hose (28) from adapter (27).
3. Remove adapter (27) from tee (25) at fuel pump (22).

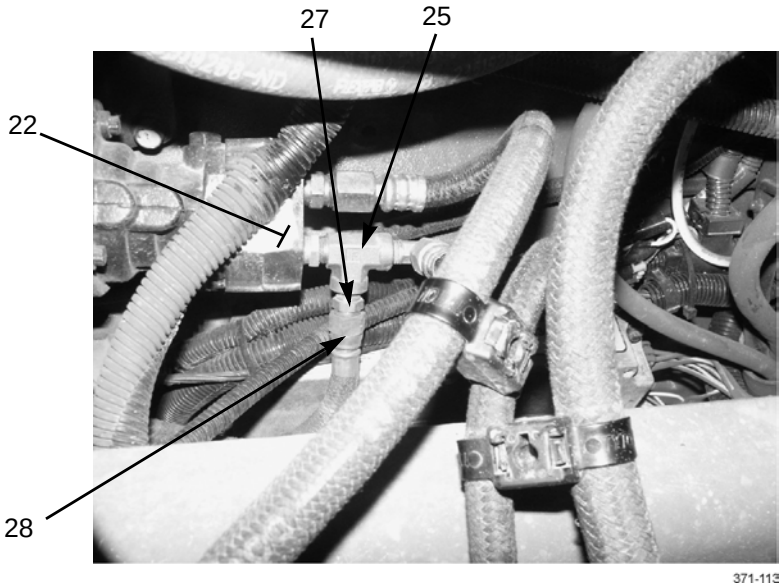

4. At secondary fuel filter (30), disconnect other end of fuel hose (28) from tee (29) and remove fuel hose from vehicle.

FUEL PUMP-TO-SECONDARY FUEL FILTER FUEL HOSE REMOVAL - CONTINUED

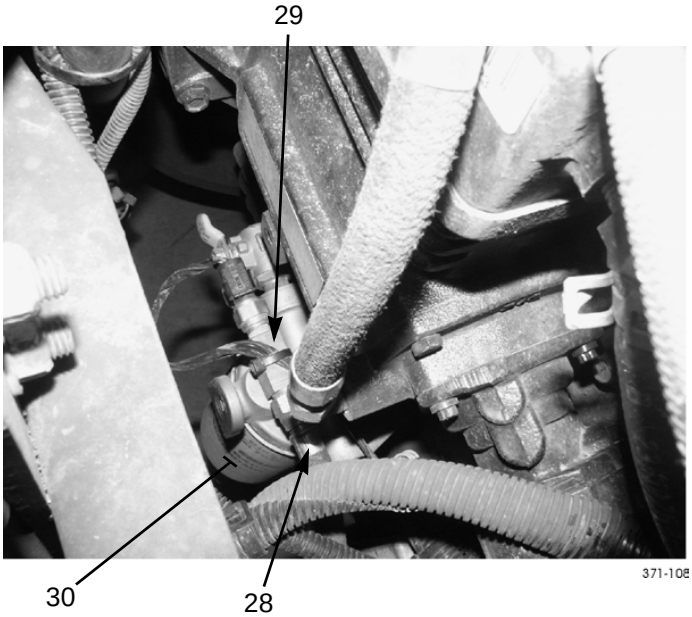

FUEL PUMP-TO-SECONDARY FUEL FILTER FUEL HOSE INSTALLATION

1. At secondary fuel filter (30), connect fuel hose (28) to tee (29).
2. Install adapter (27) to tee (25) at rear of fuel pump (22).
3. Install other end of fuel hose (28) to adapter (27).
4. Open fuel shut-off valve (1).
5. Prime fuel system (TM 9-2320-302-10).
6. Start engine (TM 9-2320-302-10) and check for fuel leaks.

SECONDARY FUEL FILTER-TO-ENGINE FUEL HOSE AND TUBE REMOVAL

1. At front of secondary fuel filter (30), disconnect fuel hose (31) from fuel shut-off valve (1).
2. At left side of engine, disconnect fuel hose (31) from fuel tube (32) and remove fuel hose from vehicle.
3. Remove two screws (34) and clamps (35) from fuel tube (32).
4. Disconnect fuel tube (32) from elbow (33) and remove fuel tube from vehicle.
5. Remove elbow (33) from rear of engine.

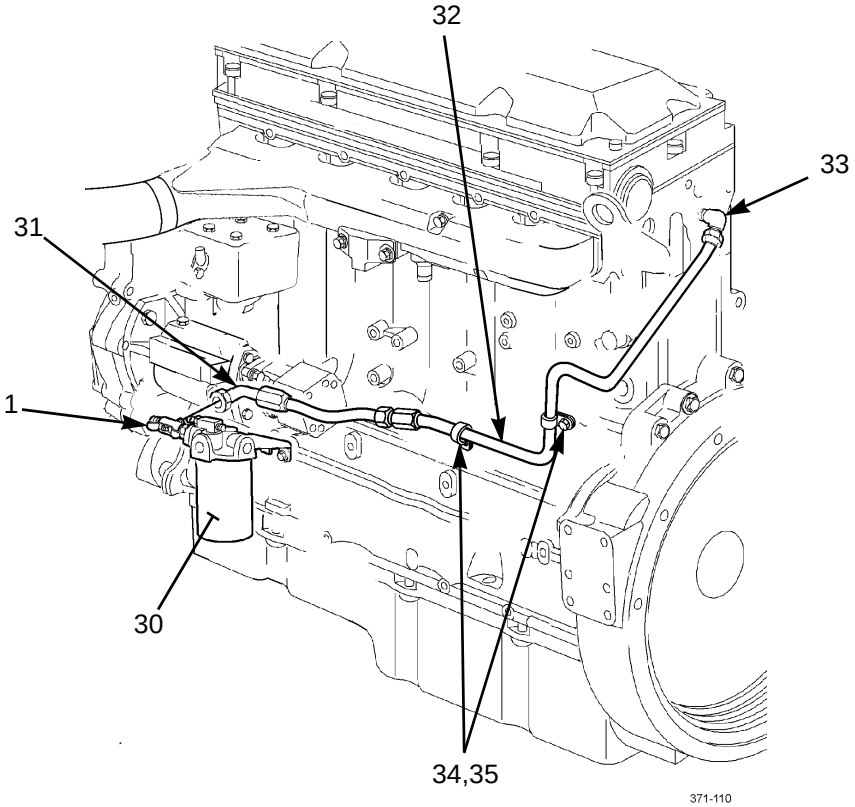

SECONDARY FUEL FILTER-TO-ENGINE FUEL HOSE AND TUBE INSTALLATION

1. Install elbow (33) to rear of engine.
2. Position fuel tube (32) to vehicle and connect fuel tube to elbow (33).
3. Install fuel tube (32) to left side of engine with two clamps (35) and screws (34).
4. Connect fuel hose (31) to fuel tube (32).
5. At front of secondary fuel filter (30), connect other end of fuel hose (31) to fuel shut-off valve (1).
6. Prime fuel system (TM 9-2320-302-10).
7. Start engine (TM 9-2320-302-10) and check for fuel leaks.
8. Install transmission tunnel access cover (WP 0268 00).

FUEL RETURN COOLER REMOVAL (M916A3, M917A2)

1. Place a drain pan under fuel return cooler (42).
2. Disconnect two fuel lines (45) and allow fuel from lines and fuel return cooler (42) to drain into pan.
3. Remove two elbows (44) from fuel return cooler (42).
4. Remove four capscrews (43), eight washers (40), four nuts (39), and fuel return cooler (42) from brackets (41).

NOTE

Perform step 5 only if brackets are damaged.

5. Remove four capscrews (37), eight washers (36), four nuts (46), and two brackets (41) from crossmember (38).

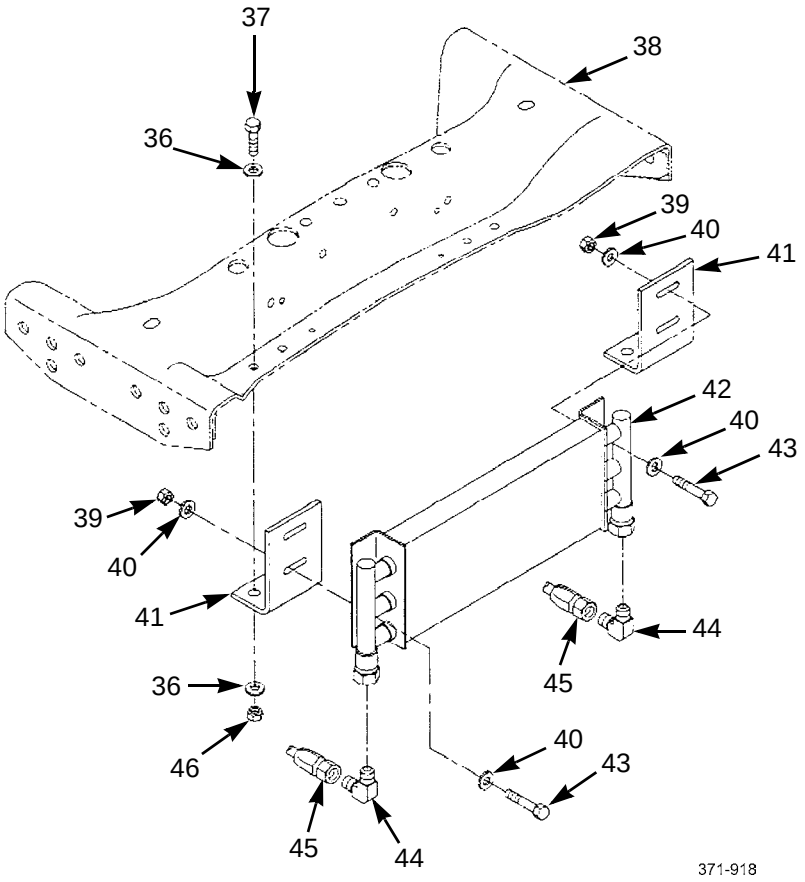

FUEL RETURN COOLER INSTALLATION (M916A3, M917A2)

NOTE

Perform step 1 only if brackets were removed.

1. Position two brackets (41) on crossmember (38) and install four capscrews (37), eight washers (36), and four nuts (46).
2. Position fuel return cooler (42) on two brackets (41) and install four capscrews (43), eight washers (40), and four nuts (39).
3. Install two elbows (44) on fuel return cooler (42).
4. Connect fuel lines (45) to two elbows (44).

END OF WORK PACKAGE

FUEL STRAINER AND FILTER ELEMENT REPLACEMENT 0034 00

THIS WORK PACKAGE COVERS

Fuel Strainer Element Removal, Fuel Strainer Element Installation, Fuel Filter Element Removal, Fuel Filter Element Installation

INITIAL SETUP

Tools and Special Tools

Tool kit, general mechanic's (Item 50, WP 0306 00)

Pan, drain (Item 29, WP 0306 00)

Materials/Parts

Element, filter (P/N S3226)

Fuel, diesel (Item 16 or 17, WP 0305 00)

Materials/Parts - Continued

Oil, lubricating (Item 22, WP 0305 00)

Rag, wiping (Item 31, WP 0305 00)

References

TM 9-2320-302-10

FUEL STRAINER ELEMENT REMOVAL

1. Turn fuel shut-off valve (1) to OFF position.

WARNING

- DO NOT perform fuel system checks, inspections or maintenance while smoking or near fire, flames or sparks. Fuel may ignite, causing damage to vehicle and injury or death to personnel.
- Personnel must wear fuel-resistant gloves when handling fuels. If exposed to fuel, promptly wash exposed skin and change fuel-soaked clothing.

NOTE

Although mounted in different locations along left side frame rail, fuel strainers and filter elements are removed in the same manner. M915A3 New Model is illustrated.

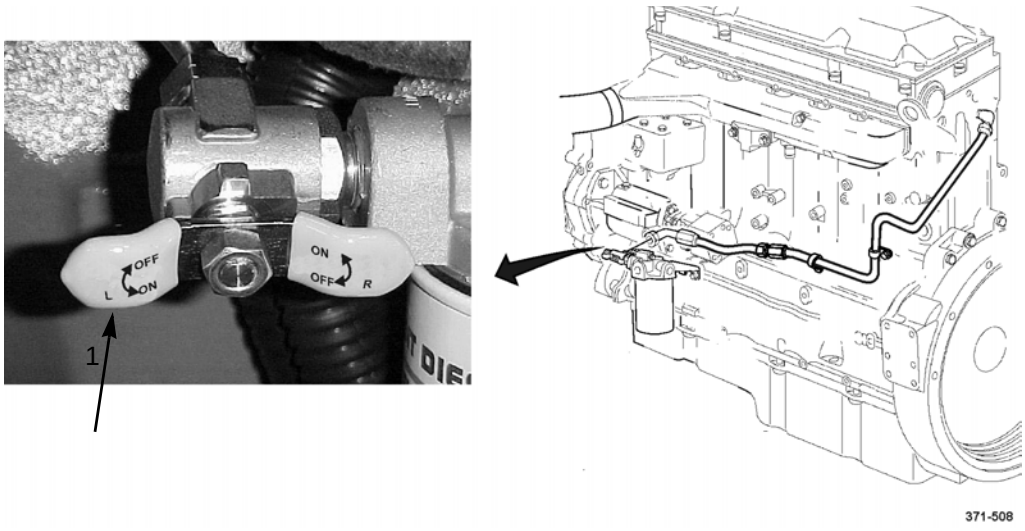

Ensure that drain pan is positioned to catch fuel. Ensure that all spills are cleaned up.

2. Remove plug (8) from sediment bowl (7) and allow fuel to drain.
3. Remove sediment bowl (7) and gasket (6) from strainer element (5).
4. Remove strainer element (5), gasket (4), and o-ring (3) from adapter (2). Discard strainer element, gasket, and o-ring.

FUEL STRAINER ELEMENT REMOVAL - CONTINUED

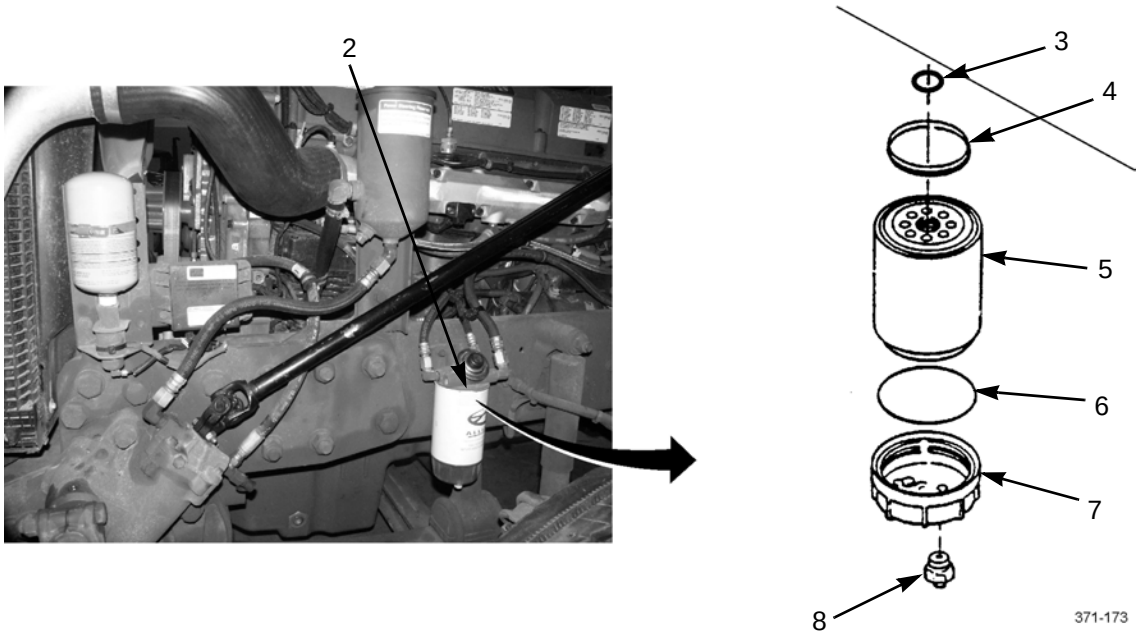

FUEL STRAINER ELEMENT INSTALLATION

1. Lightly coat new gasket (4) and new o-ring (3) with lubricating oil. Set gasket aside.
2. Wipe sediment bowl (7) clean with rag.
3. Install gasket (6) and plug (8) on sediment bowl (7).
4. Install sediment bowl (7) on new strainer element (5).
5. Fill strainer element (5) 2/3 full with clean diesel fuel.
6. Install o-ring (3), gasket (4), and strainer element (5) on adapter (2) until gasket just contacts adapter.
7. Tighten strainer element (5) by hand an additional 1/2 turn.
8. Turn fuel shut-off valve (1) to ON position.
9. Prime fuel system (TM 9-2320-302-10).
10. Start engine and check for leaks (TM 9-2320-302-10).

FUEL FILTER ELEMENT REMOVAL

1. Turn fuel shut-off valve (1) to OFF position.

WARNING

- DO NOT perform fuel system checks, inspections or maintenance while smoking or near fire, flames or sparks. Fuel may ignite, causing injury or death to personnel and damage to vehicle.
- Fuel vapors are toxic. Avoid prolonged exposure or breathing of fumes. Work in a well-ventilated area. Failure to follow this warning could result in serious injury to personnel.
- Personnel must wear fuel-resistant gloves when handling fuels. If exposed to fuel, promptly wash exposed skin and change fuel-soaked clothing.

2. Remove filter element (9) and gasket (11) from adapter (10). Discard filter element and gasket.

FUEL FILTER ELEMENT INSTALLATION

1. Lightly coat new gasket (11) with lubricating oil. Set gasket aside.
2. Fill filter element (9) 2/3 full with clean diesel fuel.
3. Install new gasket (11) and filter element (9) on adapter (10) until gasket just contacts adapter.
4. Tighten filter element (9) by hand additional 1/2 turn.
5. Turn fuel shut-off valve (1) to ON position.

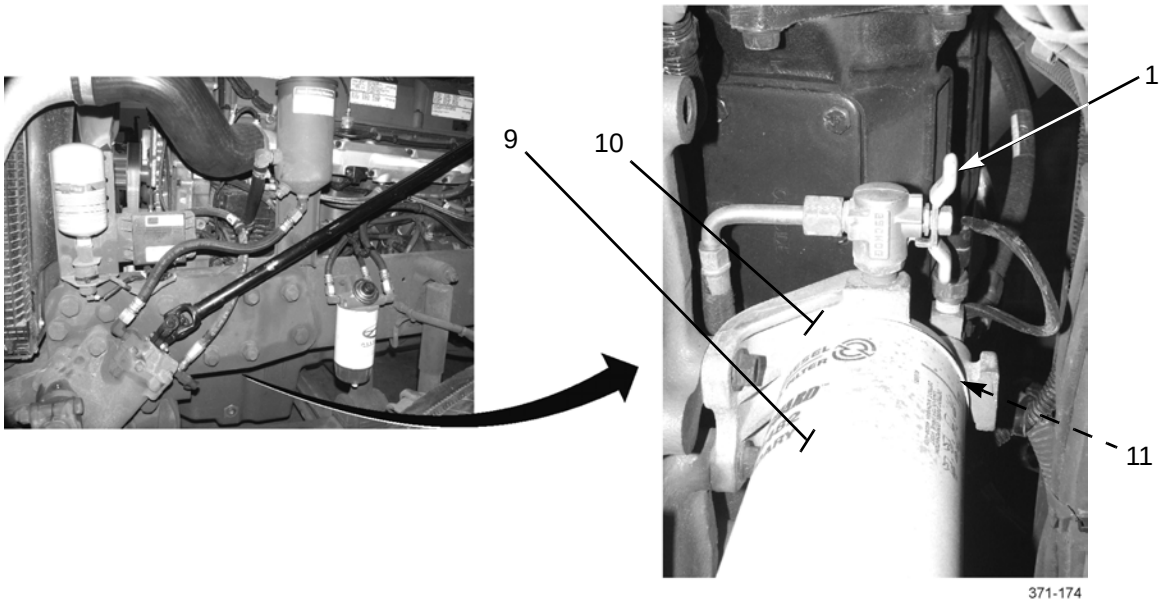

6. Prime fuel system (TM 9-2320-302-10).
7. Start engine and check for leaks (TM 9-2320-302-10).

END OF WORK PACKAGE

FUEL FILTER ADAPTERS REPLACEMENT (M915A3 OLD MODEL) 0035 00

THIS WORK PACKAGE COVERS

Fuel Strainer Adapter Removal, Fuel Filter Adapter Removal, Fuel Filter Adapter Installation, Fuel Strainer Adapter Installation

INITIAL SETUP

Tools and Special Tools

Tool kit, general mechanic's (Item 50, WP 0306 00)

Materials/Parts

Nut, lock (P/N M45913/1-6CG5C) (2)

Equipment Condition

Fuel strainer and filter elements removed (WP 0034 00)

Fuel hoses and fittings removed (WP 0032 00)

FUEL STRAINER ADAPTER REMOVAL

WARNING

- DO NOT perform fuel system checks, inspections or maintenance while smoking or near fire, flames or sparks. Fuel may ignite, causing injury or death to personnel and damage to vehicle.
- Fuel vapors are toxic. Avoid prolonged exposure or breathing of fumes. Work in a well-ventilated area. Failure to follow this warning could result in serious injury to personnel.
- Personnel must wear fuel-resistant gloves when handling fuels. If exposed to fuel, promptly wash exposed skin and change fuel-soaked clothing.

FUEL STRAINER ADAPTER REMOVAL - CONTINUED

1. Remove two locknuts (4), washers (3), screws (1), fuel strainer adapter (15), and spacer plate (2) from left frame rail. Discard locknuts.

2. Remove elbow (16), two elbows (14), and plug (5) from fuel strainer adapter (15).

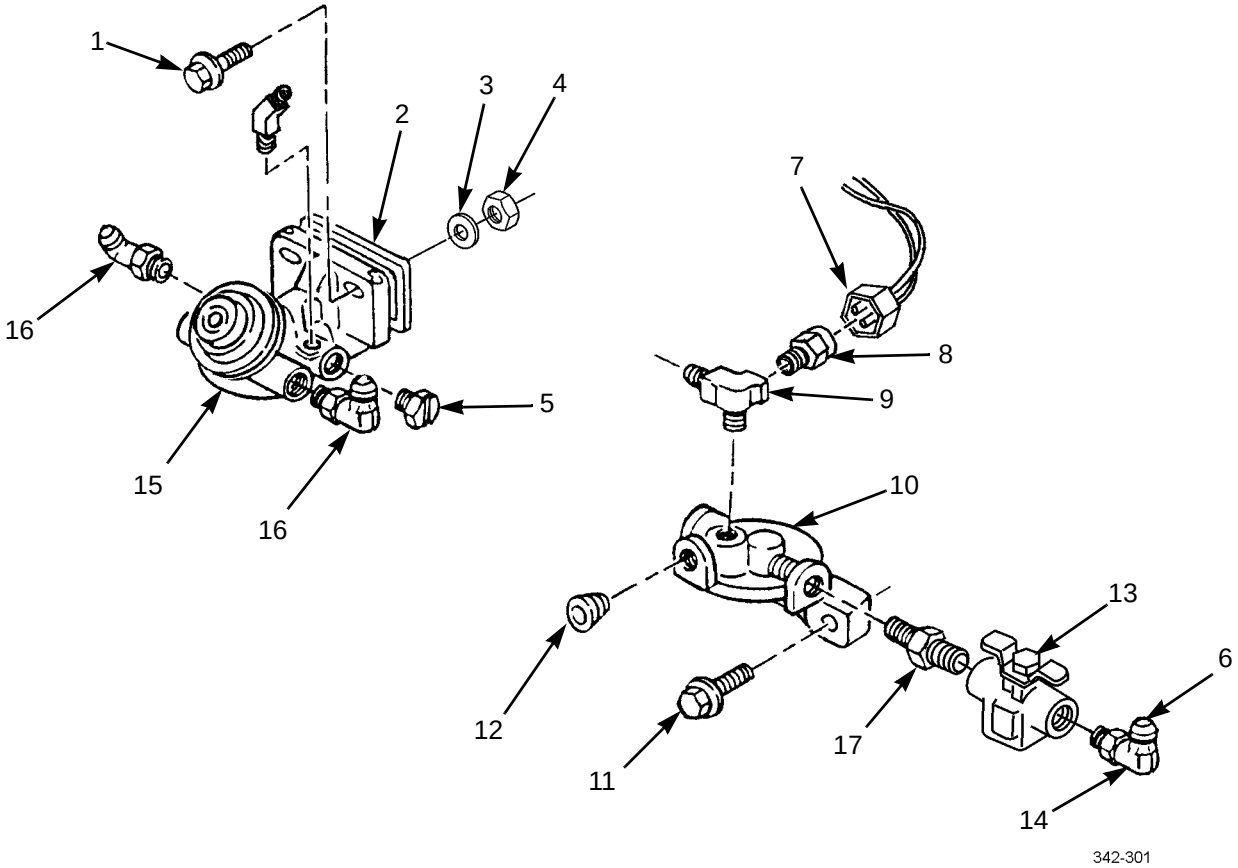

WARNING

- DO NOT perform fuel system checks, inspections or maintenance while smoking or near fire, flames or sparks. Fuel may ignite, causing injury or death to personnel and damage to vehicle.
- Fuel vapors are toxic. Avoid prolonged exposure or breathing of fumes. Work in a well-ventilated area. Failure to follow this warning could result in serious injury to personnel.
- Personnel must wear fuel-resistant gloves when handling fuels. If exposed to fuel, promptly wash exposed skin and change fuel-soaked clothing.

FUEL FILTER ADAPTER REMOVAL

1. Remove engine wiring harness connector (7) from fuel pressure sensor (8).
2. Remove two screws (11) and fuel filter adapter (10) from left side of engine.
3. Remove fuel pressure sensor (8), pipe tee (9), and pipe plug (12) from fuel filter adapter (10).
4. Disconnect fuel line (6) from shut-off valve (13).
5. Remove fuel shut-off valve (13) and connector (17) from fuel filter adapter (10).

FUEL FILTER ADAPTER INSTALLATION

1. Install fuel shut-off valve (13) on adapter (10).
2. Connect fuel line (6) on fuel shut-off valve (13).
3. Install pipe plug (12), pipe tee (9), and fuel pressure sensor (8) on fuel filter adapter (10).
4. Install fuel filter adapter (10) on left side of engine with two screws (11).
5. Install engine wiring harness connector (7) on fuel pressure sensor (8).
6. Install plug (5), two elbows (14), and elbow (16) on fuel strainer adapter (15).
7. Install spacer plate (2) and fuel strainer adapter (15) on left frame rail with two screws (1), washers (3), and new lock-nuts (4).
8. Install fuel hoses and fittings (WP 0032 00).
9. Install fuel filter element (WP 0034 00).

END OF WORK PACKAGE

FUEL FILTER ADAPTERS REPLACEMENT (M915A3 NEW MODEL, M916A3, AND M917A2) 0036 00

THIS WORK PACKAGE COVERS

Primary Fuel Filter Adapter: Removal, Installation; Secondary Fuel Filter Adapter: Removal, Installation

INITIAL SETUP

Tools and Special Tools

Tool kit, general mechanic's (Item 50, WP 0306 00)

Pan, drain (Item 29, WP 0306 00)

Materials/Parts

Rag, wiping (Item 31, WP 0305 00)

Tags, marker (Item 34, WP 0305 00)

Nut, lock (primary fuel filter adapter) (P/N M45913/1-6CG5C) (2)

References

TM 9-2320-302-10

Equipment Condition

Primary fuel filter strainer element removed (WP 0034 00)

Secondary fuel filter element removed (WP 0034 00)

WARNING

- DO NOT perform fuel system checks, inspections or maintenance while smoking or near fire, flames or sparks. Fuel may ignite, causing injury or death to personnel and damage to vehicle.
- Fuel vapors are toxic. Avoid prolonged exposure or breathing of fumes. Work in a well-ventilated area. Failure to follow this warning could result in serious injury to personnel.
- Personnel must wear fuel-resistant gloves when handling fuels. If exposed to fuel, promptly wash exposed skin and change fuel-soaked clothing.

NOTE

- Use a drain pan to catch draining fuel. Ensure all spills are cleaned up.
- Tags fuel hoses and fittings to ensure correct installation.

PRIMARY FUEL FILTER ADAPTER REMOVAL

1. Disconnect three fuel hoses (2) from elbows (7).
2. Remove two locknuts (4), washers (5), screws (3), primary fuel filter adapter (9), and two spacers (6) from left frame rail (1). Discard locknuts.
3. Remove three elbows (7) and plug (8) from primary fuel filter adapter (9).

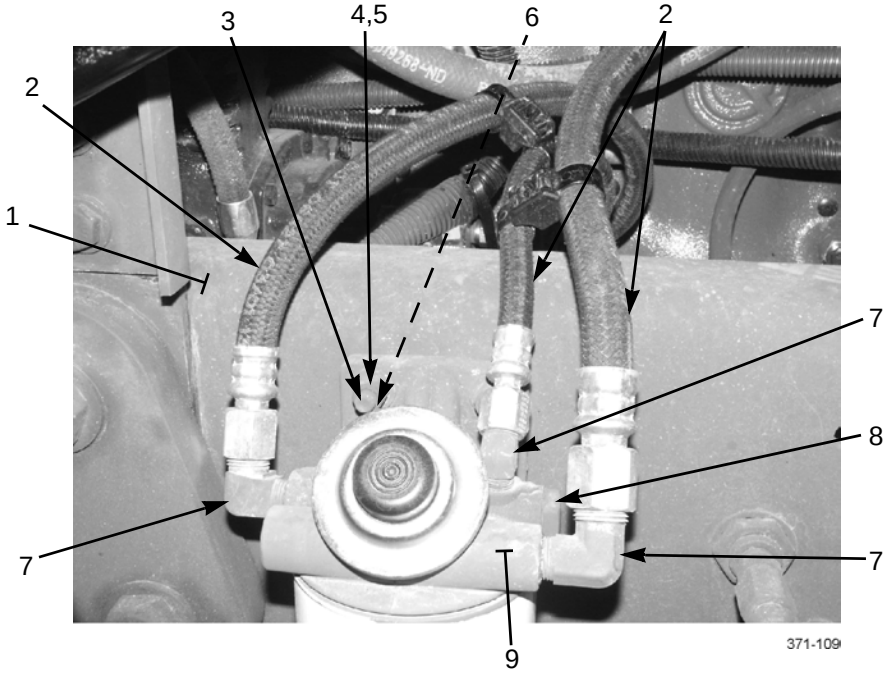

PRIMARY FUEL FILTER ADAPTER INSTALLATION

1. Install three elbows (7) and plug (8) to primary fuel filter adapter (9).
2. Install two spacers (6) and primary fuel filter adapter (9) on left frame rail (1) with two screws (3), washers (5), and new locknuts (4).
3. Connect three fuel hoses (2) to elbows (7).
4. Install primary fuel filter strainer element (WP 0034 00).
5. Prime fuel system (TM 9-2320-302-10).
6. Start engine (TM 9-2320-302-10) and check for fuel leaks.

SECONDARY FUEL FILTER ADAPTER REMOVAL

1. Disconnect fuel hose (12) from tee (11) at secondary fuel filter adapter (13).
2. Remove fuel temperature sensor (10) from tee (11).

SECONDARY FUEL FILTER ADAPTER REMOVAL - CONTINUED

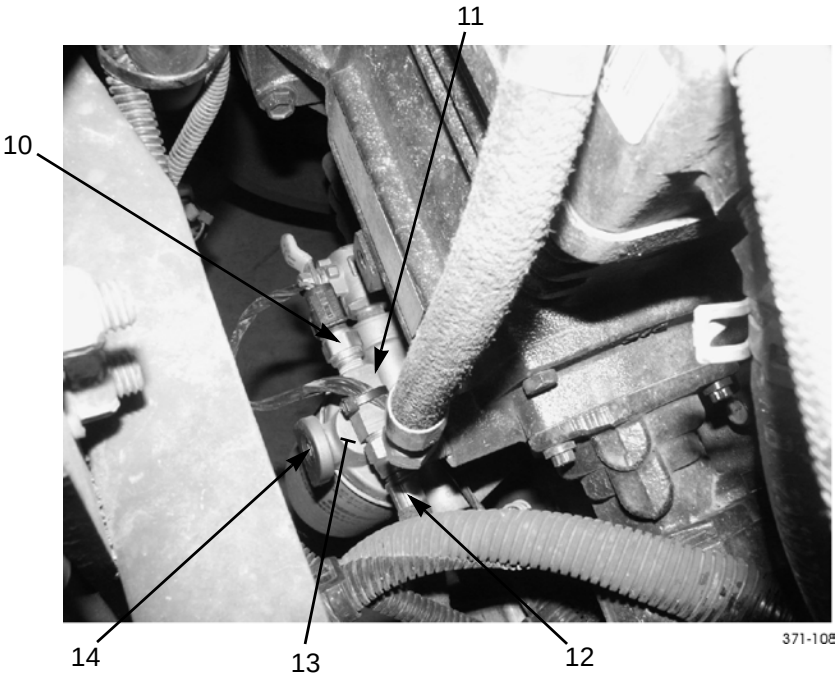

3. Disconnect fuel hose (16) from fuel shut-off valve (17).
4. Remove two bolts (15) and secondary fuel filter adapter (13) from left side of engine.
5. Remove fuel shut-off valve (17) from secondary fuel filter adapter (13).

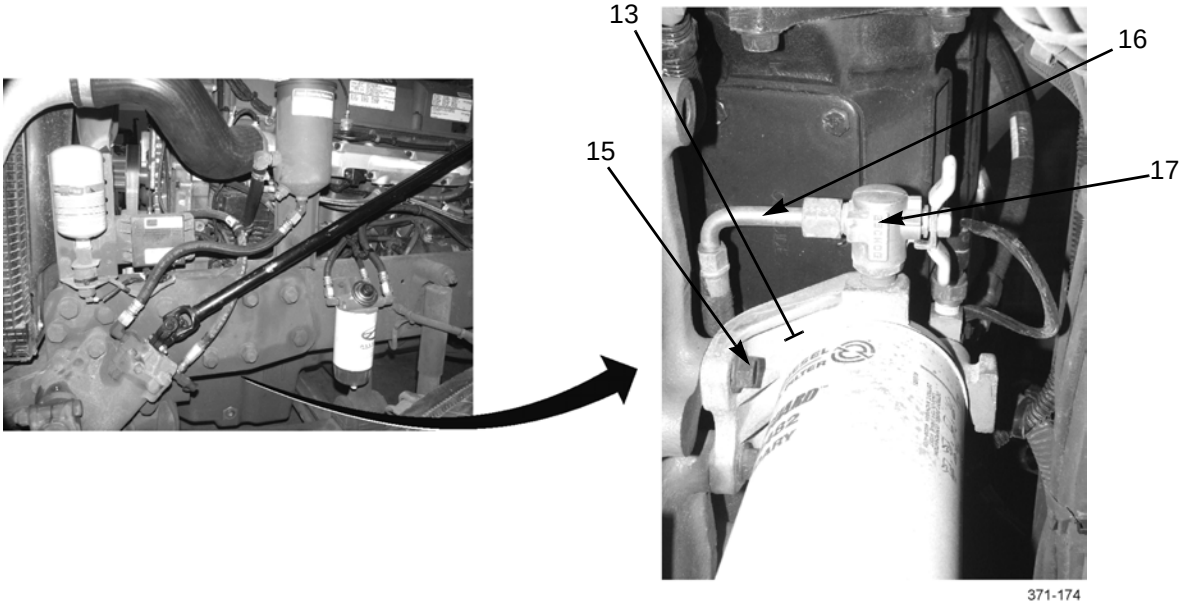

6. Remove tee (11) and two plugs (14) from secondary fuel filter adapter (13).

SECONDARY FUEL FILTER ADAPTER INSTALLATION

1. Install tee (11) and two plugs (14) to secondary fuel filter adapter (13).

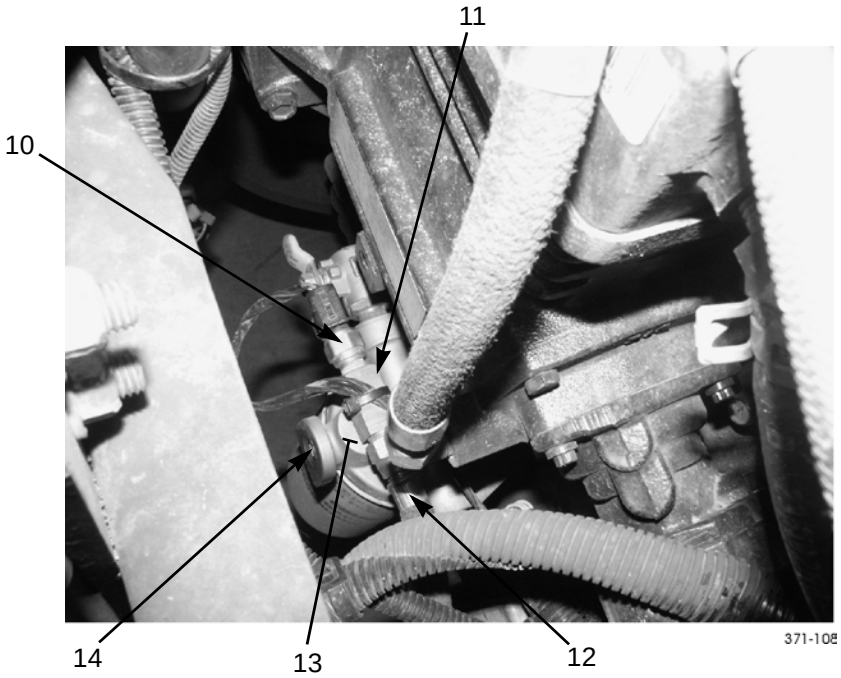

2. Install fuel shut-off valve (17) to secondary fuel filter adapter (17).
3. Install secondary fuel filter adapter (13) to left side of engine with two bolts (15).
4. Connect fuel hose (16) to fuel shut-off valve (17).

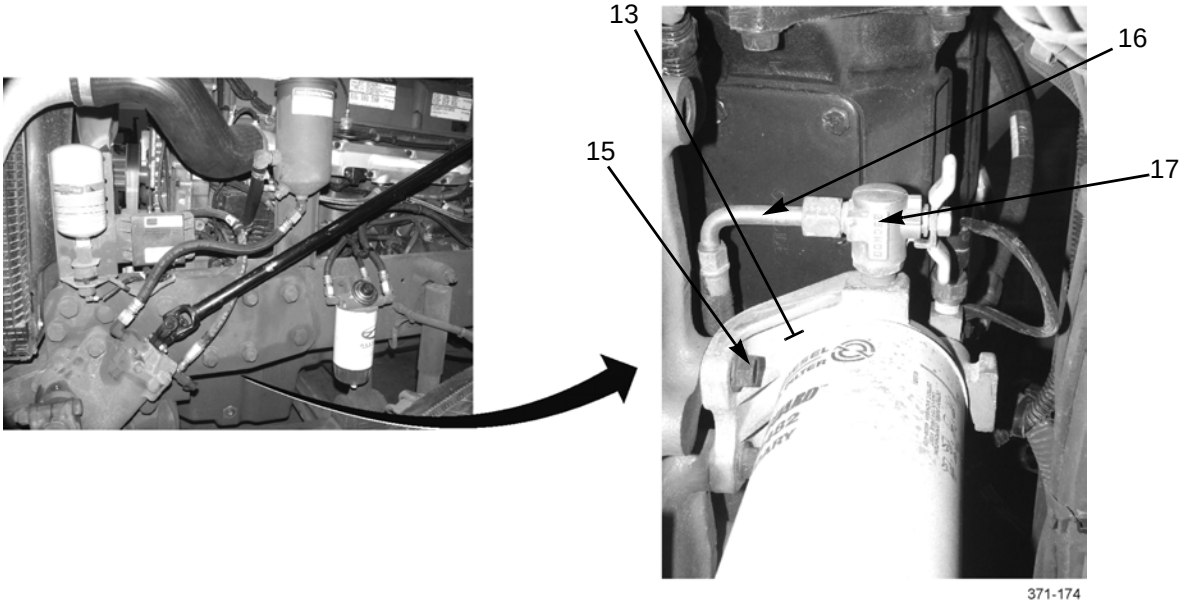

5. Install fuel temperature sensor (10) to tee (11).
6. Connect fuel hose (12) to tee (11).

SECONDARY FUEL FILTER ADAPTER INSTALLATION

7. Install secondary fuel filter element (WP 0034 00).
8. Prime fuel system (TM 9-2320-302-10).
9. Start engine (TM 9-2320-302-10) and check for fuel leaks.

END OF WORK PACKAGE

FUEL TANK AND MOUNTING BRACKETS REPLACEMENT 0037 00

THIS WORK PACKAGE COVERS

Fuel Tank Removal, Mounting Bracket Removal, Mounting Bracket Installation, Fuel Tank Installation

INITIAL SETUP

Tools and Special Tools

Tool kit, general mechanic's (Item 50, WP 0306 00)

Trestle, hoist, portable (Item 52, WP 0306 00)

Pan, drain (Item 29, WP 0306 00)

Materials/Parts

Rags, wiping (Item 31, WP 0305 00)

Tag, marker (Item 34, WP 0305 00)

Nut, lock (P/N M45913/1-10CG5C) (2)

Pin, cotter (P/N MS24665-359) (2)

Personnel Required

Two

References

TM 9-2320-302-10

Equipment Condition

Fuel level sending unit removed (WP 0112 00)

Right step removed (WP 0222 00)

FUEL TANK REMOVAL

WARNING

- DO NOT perform fuel system checks, inspections or maintenance while smoking or near fire, flames or sparks. Fuel may ignite, causing injury or death to personnel and damage to vehicle.
- Fuel vapors are toxic. Avoid prolonged exposure or breathing of fumes. Work in a well-ventilated area. Failure to follow this warning could result in serious injury to personnel.
- Personnel must wear fuel-resistant gloves when handling fuels. If exposed to fuel, promptly wash exposed skin and change fuel-soaked clothing.

NOTE

Fuel tank capacity is 100 gal. Have suitable drain pans available.

FUEL TANK REMOVAL - CONTINUED

1. Position drain pan under drain plug (5) at bottom of fuel tank (4).
2. Remove fuel filler cap (1) and drain plug (5). Allow fuel to drain.
3. Install drain plug (5) and fuel filler cap (1).
4. Remove two fuel hoses (3) and elbows (2) from fuel tank (4).

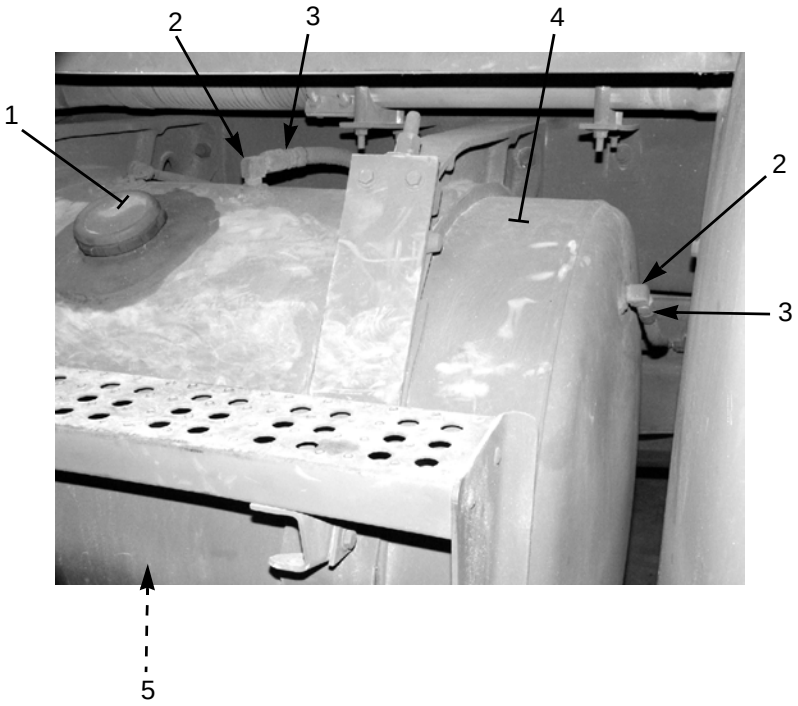

5. Position trestle under fuel tank (4). Adjust trestle height to support weight of fuel tank.

NOTE

Perform step 6 for each of two straps.

6. Remove two locknuts (13) and washer (14) from end of strap (15). Pull strap free of mounting bracket (18) and rotate strap aside. Discard locknuts.
7. Lower fuel tank (4) to clear mounting brackets (18) and remove fuel tank from vehicle.

MOUNTING BRACKET REMOVAL

NOTE

- Perform steps 1 through 4 for each of two mounting brackets.
- Note position of strap in mounting bracket for installation.

1. Remove cotter pin (8), nut (9), washer (10), spacer (19), and strap (15) from mounting bracket (18). Discard cotter pin.
2. Remove insulator (16) from strap (15).
3. Remove four nuts (12), washers (11), screws (6), washers (7), and mounting bracket (18) from frame rail (20).
4. Remove bracket insulator (17) from mounting bracket (18).

MOUNTING BRACKET REMOVAL - CONTINUED

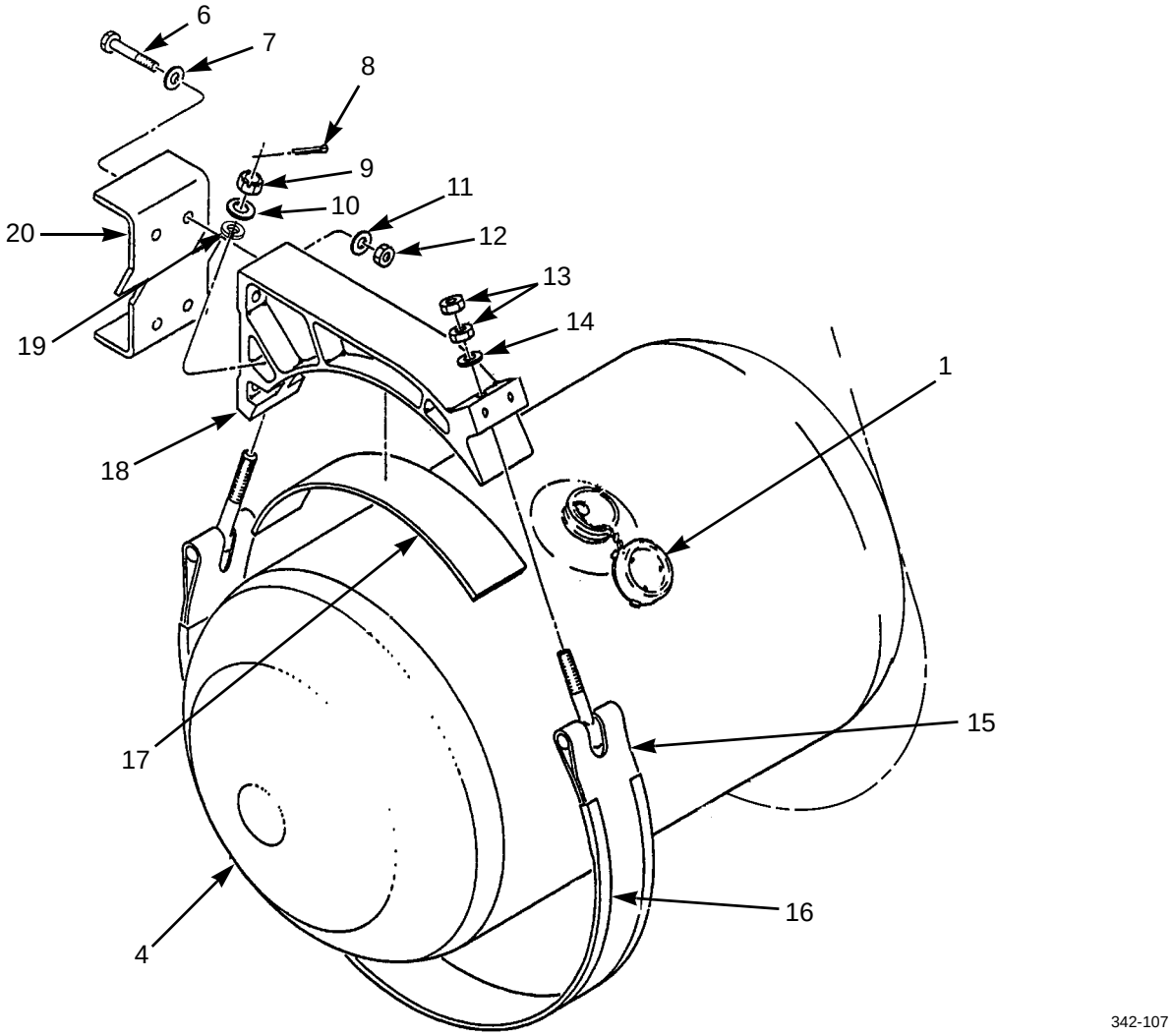

MOUNTING BRACKET INSTALLATION

NOTE

Perform steps 1 through 4 for each of two mounting brackets.

1. Install bracket insulator (17) to mounting bracket (18).
2. Install mounting bracket (18) to frame rail (20) with four washers (7), screws (6), washers (11) and nuts (12).
3. Install insulator (16) to strap (15).
4. Install strap (15) to mounting bracket (18) with spacer (19), washer (10), nut (9) and new cotter pin (8).

FUEL TANK INSTALLATION

1. Position fuel tank (4) to vehicle. Raise fuel tank to contact mounting brackets (18).

NOTE

Perform step 2 for each of two straps.

2. Push end of strap (15) into mounting bracket (18) and loosely install washer (14) and two new locknuts (13).
3. Remove trestle from under fuel tank (4).
4. Adjust position of fuel tank (4) so that drain plug is facing downward and filler cap (1) is easily accessible. Ensure that two drain plugs are installed.
5. Tighten two nuts (13) of each strap (15).

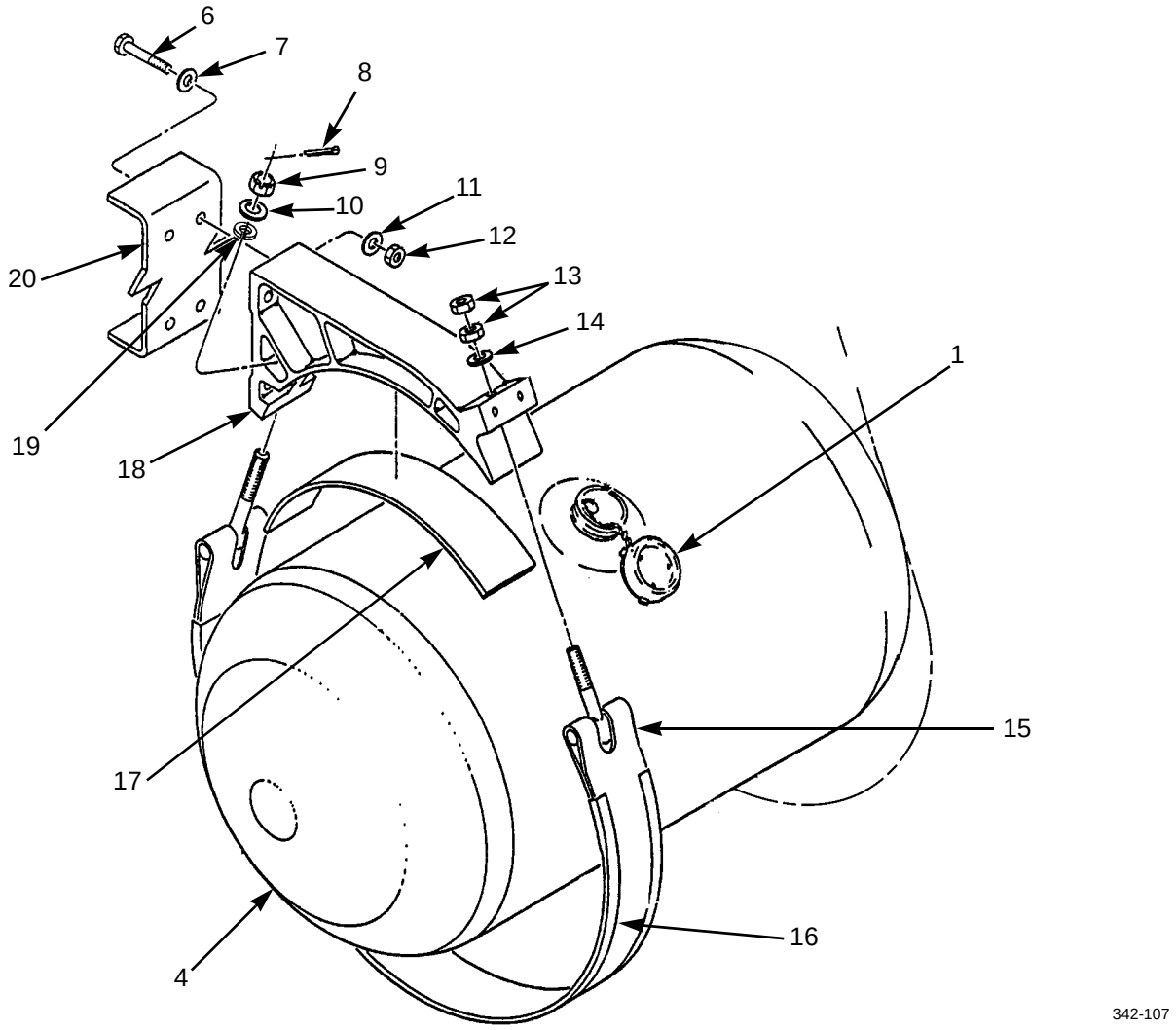

FUEL TANK INSTALLATION - CONTINUED

6. Install two elbows (2) and two fuel hoses (3) to fuel tank (4).

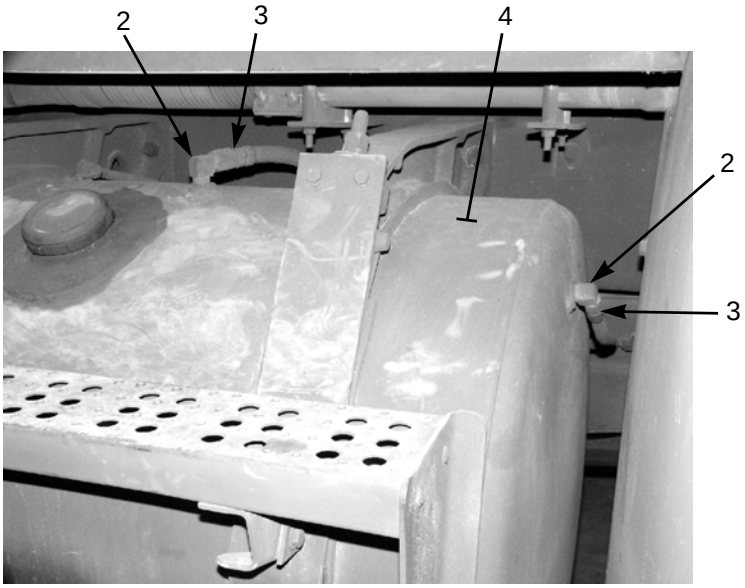

7. Install fuel level sending unit (WP 0112 00).
8. Install right step (WP 0222 00).
9. Fill fuel tank (TM 9-2320-302-10).

END OF WORK PACKAGE

FUEL PUMP REPLACEMENT 0038 00

THIS WORK PACKAGE COVERS

Removal, Installation

INITIAL SETUP

Tools and Special Tools

Tool kit, general mechanic's (Item 50, WP 0306 00)

Wrench, torque, 15-75 lb-ft (Item 57, WP 0306 00)

Materials/Parts

Gasket (P/N 23505248)

Materials/Parts - Continued

Rags, wiping (Item 31, WP 0305 00)

Tags, marker (Item 34, WP 0305 00)

References

TM 9-2320-302-10

REMOVAL

WARNING

- DO NOT perform fuel system checks, inspections or maintenance while smoking or near fire, flames or sparks. Fuel may ignite, causing injury or death to personnel and damage to vehicle.
- Fuel vapors are toxic. Avoid prolonged exposure or breathing of fumes. Work in a well-ventilated area. Failure to follow this warning could result in serious injury to personnel.
- Personnel must wear fuel-resistant gloves when handling fuels. If exposed to fuel, promptly wash exposed skin and change fuel-soaked clothing.

REMOVAL - CONTINUED

1. Disconnect fuel inlet line (2).
2. Disconnect fuel pump-to-secondary fuel filter line (5).
3. Disconnect fuel pump-to-fuel water separator line (4).
4. Remove elbow (3), adapter (6), tee (7), and adapter (8) from outlet port of fuel pump (1).
5. Remove adapter (12) from inlet port of fuel pump (1).
6. Remove three screws (13) securing fuel pump (1) to rear of air compressor (9).
7. Remove fuel pump (1), drive coupling (11), and gasket (10). Discard gasket.

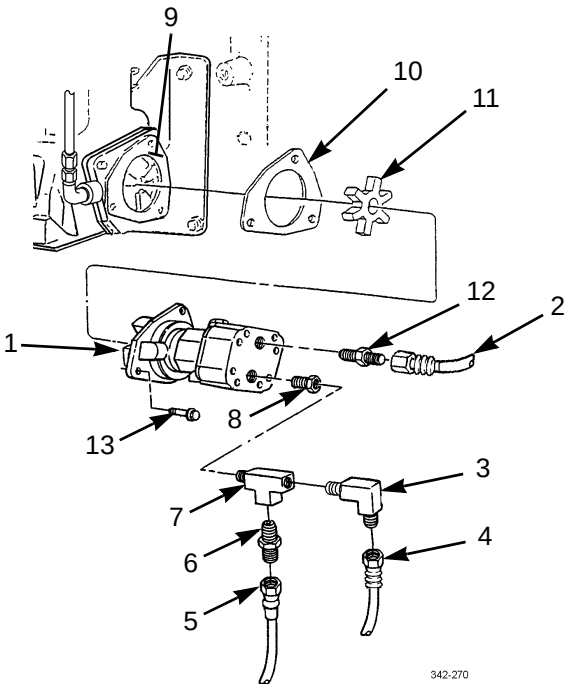

INSTALLATION

WARNING

DO NOT perform fuel system checks, inspections or maintenance while smoking or near fire, flames or sparks. Fuel may ignite, causing injury or death to personnel or damage to equipment.

1. Install drive coupling (11) and new gasket (10) to fuel pump (1).
2. Position drive coupling (11) to drive hub of air compressor (9) and align mounting holes of fuel pump (1) with those of air compressor.
3. Seat fuel pump (1) squarely against air compressor (9) and install three screws (13). Tighten screws to 22-28 lb-ft (30-38 Nm).
4. Install adapter (12) to inlet port of fuel pump (1).

INSTALLATION - CONTINUED

5. Install adapter (8), tee (7), adapter (6), and elbow (3) to outlet port of fuel pump (1).
6. Connect fuel pump-to-fuel water separator line (4).
7. Connect fuel pump-to-secondary fuel filter line (5).
8. Connect fuel inlet line (2).
9. Prime fuel system and start vehicle (TM 9-2320-302-10). Check for proper operation of fuel pump.

END OF WORK PACKAGE

AUTOMATIC ETHER STARTING AID MAINTENANCE 0039 00

THIS WORK PACKAGE COVERS

Fuel Cylinder Removal, Automatic Starting Aid Removal, Automatic Starting Aid Installation, Fuel Cylinder Installation

INITIAL SETUP

Tools and Special Tools

Tool kit, general mechanic's (Item 50, WP 0306 00)

Gloves, chemical (Item 13, WP 0306 00)

Goggles, industrial (Item 14, WP 0306 00)

Materials/Parts

Oil, lubricating (Item 22, WP 0305 00)

References

TM 9-2320-302-10

Equipment Condition

Master battery switch in OFF position (TM 9-2320-302-10)

FUEL CYLINDER REMOVAL


WARNING


Ether fuel is extremely flammable and toxic. DO NOT smoke and make sure you are in a well-ventilated area away from heat, open flames or sparks. Wear eye protection and chemical resistant gloves. Avoid contact with skin and eyes and avoid breathing ether fumes. If fluid enters or fumes irritate the eyes, wash immediately with large quantities of clean water for 15 minutes. Seek medical attention immediately if ether is inhaled or causes eye irritation. Failure to follow this warning may cause death or serious injury to personnel.

FUEL CYLINDER REMOVAL - CONTINUED

1. Loosen clamp (26) and unscrew fuel cylinder (1) from valve (25).
2. Remove gasket (27) from valve (25). Discard gasket.

AUTOMATIC STARTING AID REMOVAL

1. Disconnect main harness connector (15) from ether control relay harness connector (14).
2. Disconnect main harness connector (16) from harness connector (21).
3. Disconnect ether tube (3) from fitting (22).

NOTE

Fitting has left-hand threads. Turn right to remove fitting.

4. Remove fitting (22) from valve (25).
5. Disconnect ether tube (3) from atomizer (4) on intake manifold.

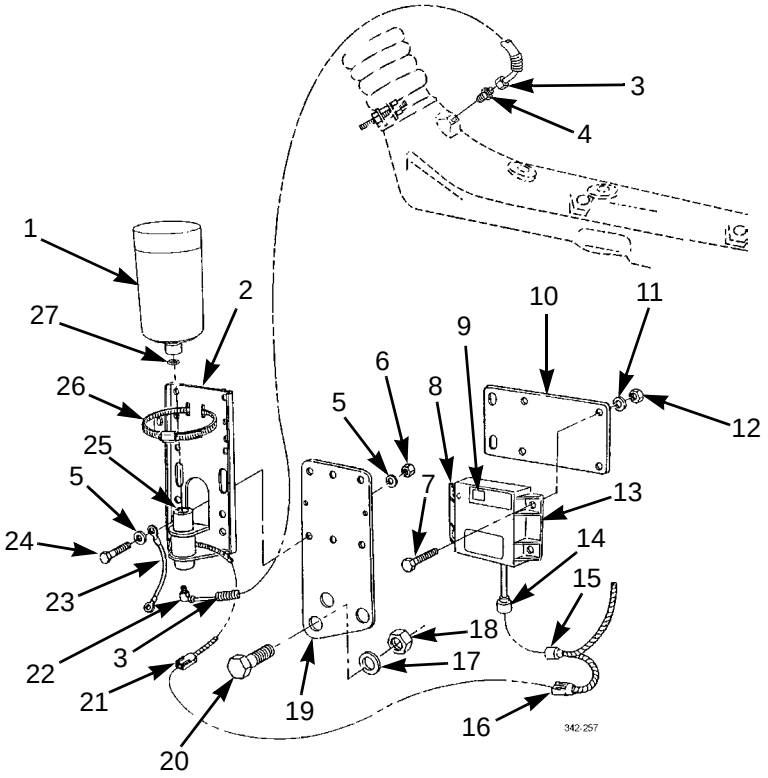

CAUTION

Note orientation of atomizer nozzle prior to removal. Orientation mark must be positioned so that orifice is facing against air flow of intake manifold. This will ensure proper dispersal of ether. Failure to install atomizer nozzle with orifice orientated properly may cause damage to engine from improper dispersal of ether.

6. Remove atomizer (4) from intake manifold.

AUTOMATIC STARTING AID REMOVAL - CONTINUED

7. Remove four bolts (7), washers (11), nuts (12), and ether control relay (13) from ether control relay bracket (10).
8. Remove ether control relay bracket (10) from fuel cylinder bracket (2) by removing two bolts (24), four washers (5), and two nuts (6) on right side of fuel cylinder bracket.

NOTE

- Valve with harness attached is permanently attached to fuel cylinder bracket.
- Remove fuel cylinder bracket only if damaged.

9. Remove two remaining bolts (24), four washers (5), two nuts (6), ground wire (23), and fuel cylinder bracket (2) from frame bracket (19).
10. Remove three bolts (20), washers (17), nuts (18), and frame bracket (19) from frame.

AUTOMATIC STARTING AID INSTALLATION

1. Position frame bracket (19) on frame and install three bolts (20), washers (17), and nuts (18).

NOTE

Perform step 2 if fuel cylinder bracket was removed.

2. Position fuel cylinder bracket (2) on frame bracket (19) and install two bolts (24), ground wire (23), four washers (5) and two nuts (6) on left side of bracket.
3. Position ether control relay bracket (10) on fuel cylinder bracket (2) and install remaining two bolts (24), four washers (5), and two nuts (6).
4. Install clamp (26) on fuel cylinder bracket (2).

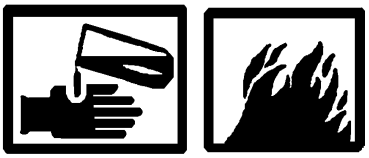

WARNING


Ether fuel is extremely flammable and toxic. DO NOT smoke and make sure you are in a well-ventilated area away from heat, open flames or sparks. Wear eye protection and chemical resistant gloves. Avoid contact with skin and eyes and avoid breathing ether fumes. If fluid enters or fumes irritate the eyes, wash immediately with large quantities of clean water for 15 minutes. Seek medical attention immediately if ether is inhaled or causes eye irritation. Failure to follow this warning may cause death or serious injury to personnel.

NOTE

Fitting has left-hand threads. Turn left to install fitting.

5. Install fitting (22) on valve (25) with opening in fitting toward rear of vehicle.
6. Position ether control relay (13) on ether control relay bracket (10) and install four bolts (7), washers (11), and nuts (12).

CAUTION

Orientation mark of atomizer nozzle must be positioned so that orifice is facing against air flow of intake manifold. This will ensure proper dispersal of ether. Failure to install atomizer nozzle with orifice oriented properly may cause damage to engine from improper dispersal of ether.

AUTOMATIC STARTING AID INSTALLATION - CONTINUED

7. Install atomizer (4) on intake manifold.
8. Connect ether tube (3) to atomizer (4).
9. Connect ether tube (3) to fitting (22).
10. Connect ether control relay harness connector (14) to main harness connector (15).
11. Connect harness connector (21) to main harness connector (16).
12. Turn on ignition (TM 9-2320-302-10).
13. Red indicator light (8) on ether control relay (13) should be ON.
14. Run a magnet over plate (9) on ether control relay (13). Red indicator light (8) should go OFF.

FUEL CYLINDER INSTALLATION

CAUTION

Always use new gasket when replacing fuel cylinder. Using an old or worn gasket can cause solenoid to discharge entire contents of cylinder into intake manifold. Failure to follow this caution can result in severe engine damage.

NOTE

Replacement fuel cylinder comes with a new gasket.

1. Apply thin coat of lubricating oil to new gasket (27) and threads of new fuel cylinder (1).
2. Install gasket (27) and fuel cylinder (1) to valve (25). Tighten clamp (26).
3. Turn on ignition (TM 9-2320-302-10).
4. Red indicator light (8) on ether control relay (13) should be ON.
5. Run a magnet over plate (9) on ether control relay (13). Red indicator light (8) should go OFF.

FUEL CYLINDER INSTALLATION - CONTINUED

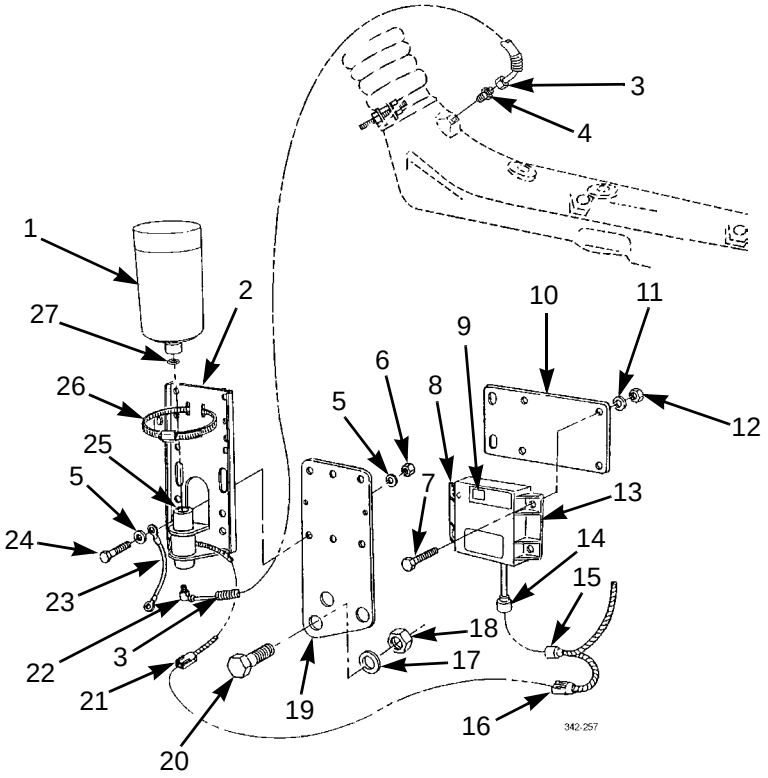

END OF WORK PACKAGE

AIR CLEANER, AIR INTAKE DUCT, AND TURBO BYPASS VALVE MAINTENANCE 0040 00

THIS WORK PACKAGE COVERS

Air Cleaner Element Removal, Air Cleaner and Intake Duct Removal, Air Cleaner and Intake Duct Disassembly, Air Cleaner and Intake Duct Assembly, Air Cleaner and Intake Duct Installation, Air Cleaner Element Installation, Turbo Bypass Valve Replacement

INITIAL SETUP

Tools and Special Tools

Tool kit, general mechanic's (Item 50, WP 0306 00)

Wrench, torque, 15-75 lb-ft (Item 57, WP 0306 00)

Materials/Parts

Nut, lock (P/N M45913/1-4CG5C) (6)

Nut, lock (P/N M45913/1-6CG5C) (4)

Compound, sealing, pipe (Item 13, WP 0305 00)

Rags, wiping (Item 31, WP 0305 00)

WARNING

If NBC exposure is suspected, all air cleaner media should be handled by personnel wearing protective equipment. Consult your NBC Officer or NBC NCO for appropriate handling or disposal procedures.

AIR CLEANER ELEMENT REMOVAL

Release three latches (3) and remove air cleaner element (2) from air cleaner (1).

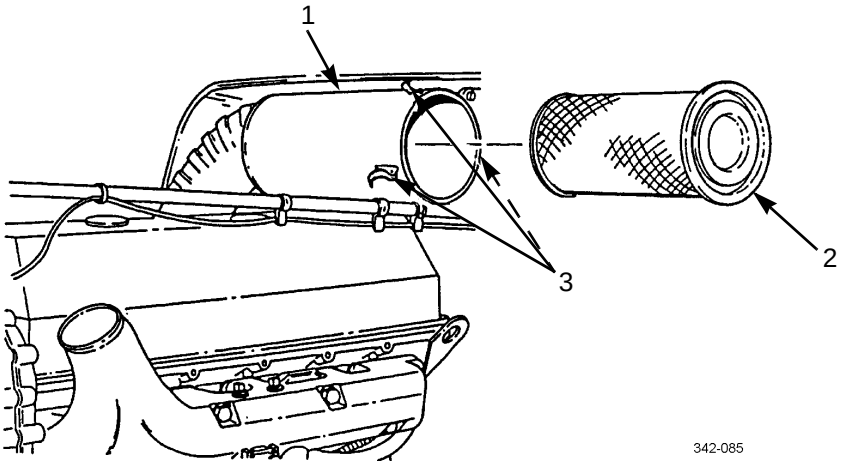

AIR CLEANER AND INTAKE DUCT REMOVAL

1. Loosen hose clamps (17 and 19) and remove elbow (18) from air cleaner (1) and air duct tube (20).
2. Remove tubing (4) and adapter fitting (5) from tube assembly (6).
3. Remove screw (7), washer (8), locknut (13), hose clamps (9 and 11), hose (10), and tube assembly (6) from air intake duct assembly (14). Discard locknut.
4. Support air cleaner (1) and remove four locknuts (15), washers (16), screws (12), air cleaner (1), and air intake duct assembly (14). Discard locknuts.

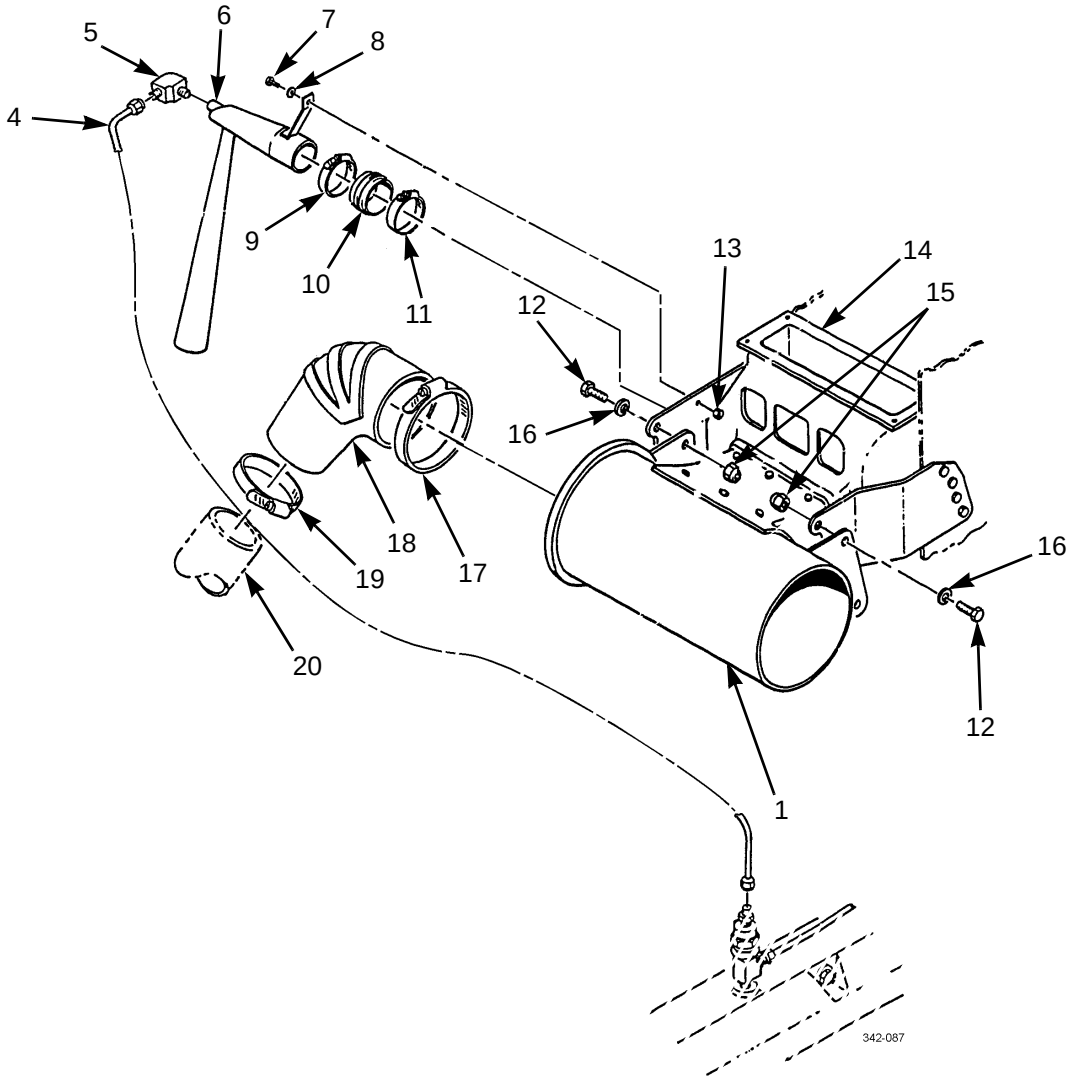

AIR CLEANER AND INTAKE DUCT DISASSEMBLY

Remove six locknuts (22), washers (21), and air cleaner (1) from air intake duct assembly (14). Discard locknuts.

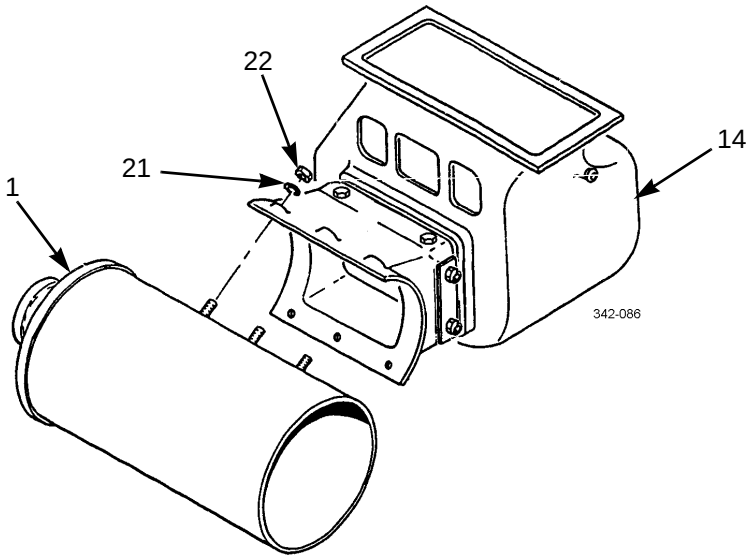

AIR CLEANER AND INTAKE DUCT ASSEMBLY

CAUTION

Ensure air cleaner and air intake duct assembly have been thoroughly cleaned. DO NOT leave any dirt or foreign matter inside air cleaner or air intake duct assembly. Dirt or other foreign matter may get into turbocharger or engine and cause damage to equipment.

Install air cleaner (1) on air intake duct assembly (14) with six washers (21) and new locknuts (22).

AIR CLEANER AND INTAKE DUCT INSTALLATION

1. Install air cleaner (1) and intake duct assembly (14) with four new locknuts (15), washers (16), and screws (12). Torque locknuts to 25-35 lb-ft (33-47 Nm).
2. Position hose clamps (9 and 11), hose (10), and tube assembly (6) on air intake duct assembly (14). Tighten hose clamps.
3. Install screw (7), washer (8), and new locknut (13) on tube assembly (6).
4. Install tube adapter (5) and tubing (4) on tube assembly (6).
5. Position elbow (18) and hose clamps (17 and 19) on air cleaner (1) and air duct tube (20). Tighten hose clamps.

AIR CLEANER ELEMENT INSTALLATION

Install air cleaner filter element (2) on air cleaner (1) and close three latches (3).

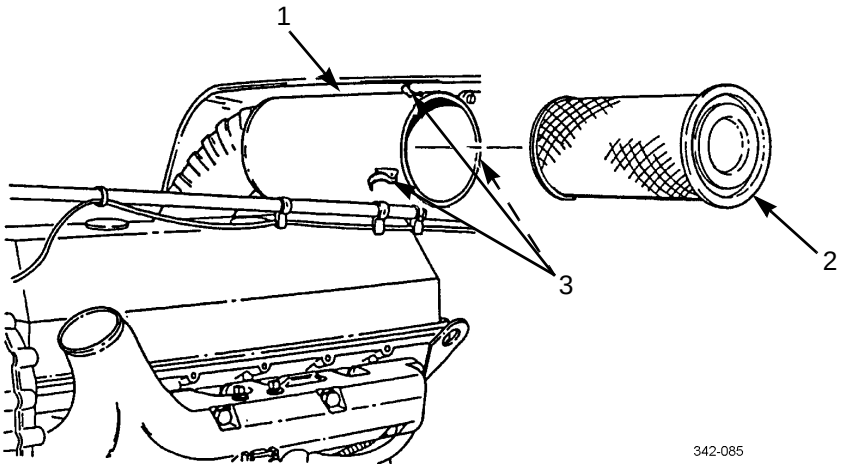

TURBO BYPASS VALVE REPLACEMENT

1. Disconnect air line connector (24) from fitting (25).
2. Remove fitting (25), turbo bypass valve (26), and nipple (23) from air intake manifold (27).
3. Coat threads of fitting (25) and nipple (23) with pipe sealing compound and install nipple, turbo bypass valve (26) and fitting on air intake manifold (27).
4. Connect air line connector (24) to fitting (25).

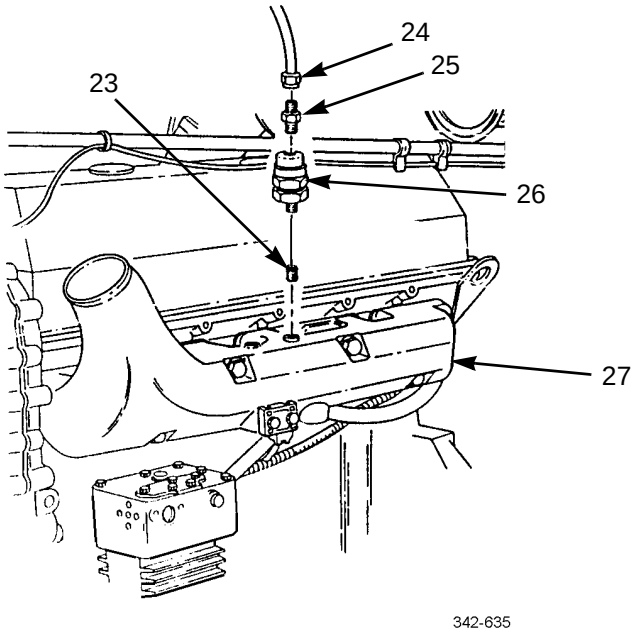

END OF WORK PACKAGE

AIR INTAKE TUBES AND HOSES REPLACEMENT (M915A3 OLD MODEL) 0041 00

THIS WORK PACKAGE COVERS

Removal, Installation

INITIAL SETUP

Tools and Special Tools

Tool kit, general mechanic's (Item 50, WP 0306 00)

Materials/Parts

Nut, lock (P/N M45913/1-4CG5C)

REMOVAL

1. Remove locknut (12), two washers (3), spacer (5), screw (2) and two clamps (4) from air intake tubes (1 and 6). Discard locknut.
2. Remove clamp (9) and reducer (8) from air cleaner (10).
3. Remove clamp (7) and reducer (8) from air intake tube (6).
4. Remove clamp (16) and air intake tube (6) from elbow (15). Remove pipe plug (11).
5. Remove clamp (14) and elbow (15) from turbocharger (13).
6. Remove four clamps (17), hose (18), and air intake tube (1) from turbocharger (13).
7. Remove four clamps (26), hose (27), and air intake tube (1) from charge air cooler (25).
8. Remove four clamps (20), hose (21), and air intake tube (19) from manifold (22).
9. Remove four clamps (23), hose (24), and air intake tube (19) from charge air cooler (25).

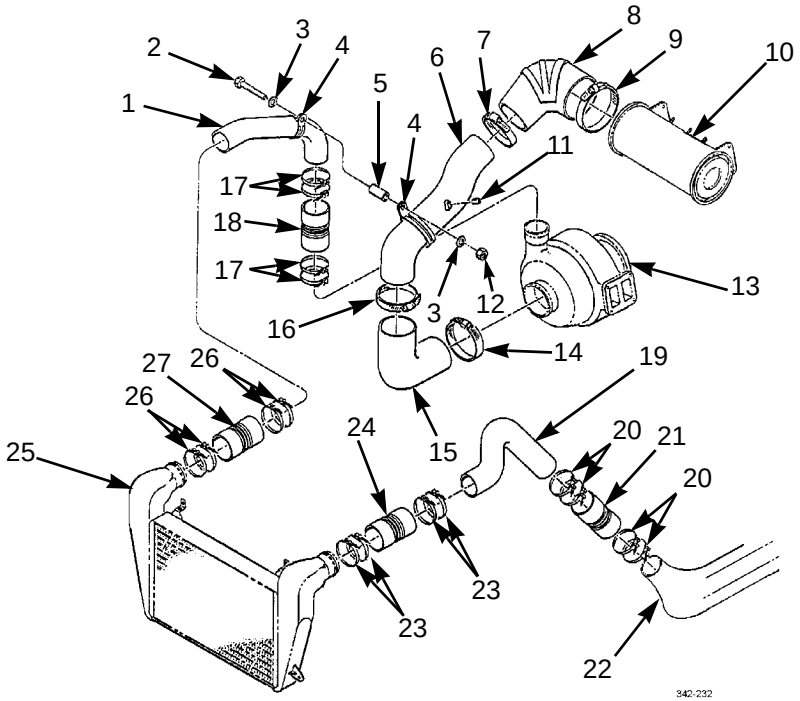

INSTALLATION

1. Install air intake tube (19) to charge air cooler (25) with hose (24) and four clamps (23).
2. Install air intake tube (19) to manifold (22) with hose (21) and four clamps (20).
3. Install air intake tube (1) to charge air cooler (25) with hose (27) and four clamps (26).
4. Install air intake tube (1) to turbocharger (13) with hose (18) and four clamps (17).
5. Install elbow (15) to turbocharger (13) with clamp (14).
6. Install pipe plug (11) to air intake tube (6) and install air intake tube to elbow (15) with clamp (16).
7. Install reducer (8) to air intake tube (6) with clamp (7).
8. Install reducer (8) to air cleaner (10) with clamp (9).
9. Install two clamps (4), screw (2), spacer (5), two washers (3) and new locknut (12) to air intake tubes (6 and 7).

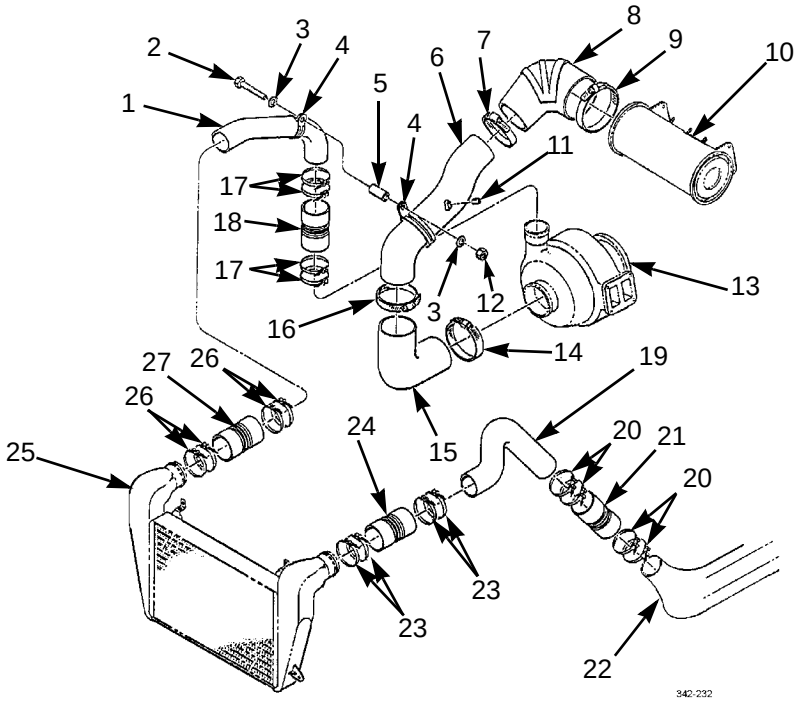

END OF WORK PACKAGE

AIR INTAKE TUBES AND HOSES REPLACEMENT (M915A3 NEW MODEL, M916A3, M917A2) 0042 00

THIS WORK PACKAGE COVERS

Removal, Installation

INITIAL SETUP

Tools and Special Tools

Tool kit, general mechanic's (Item 50, WP 0306 00)

REMOVAL

1. On right side, remove four hose clamps (2), elbow hose (1), tube (3), and elbow hose (4).

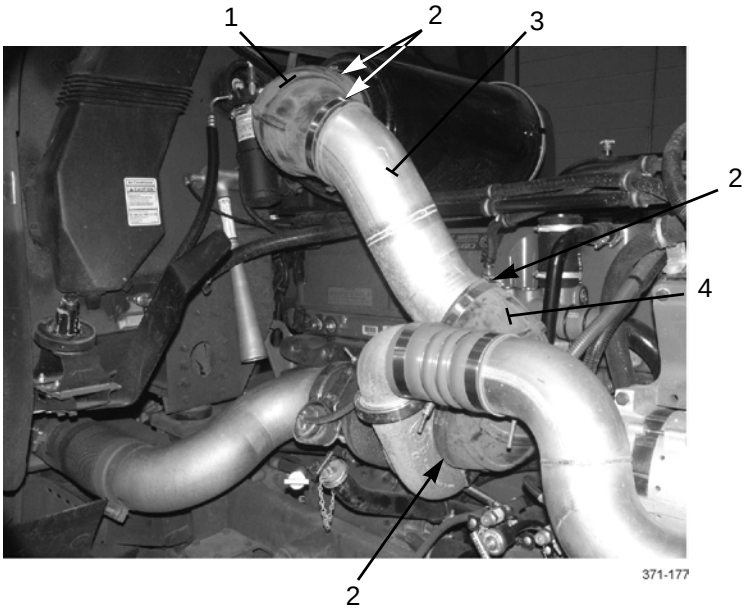

REMOVAL - CONTINUED

2. Remove clamp (8), four spring clamps (5), elbow (9), two hoses (6), and tube (7).

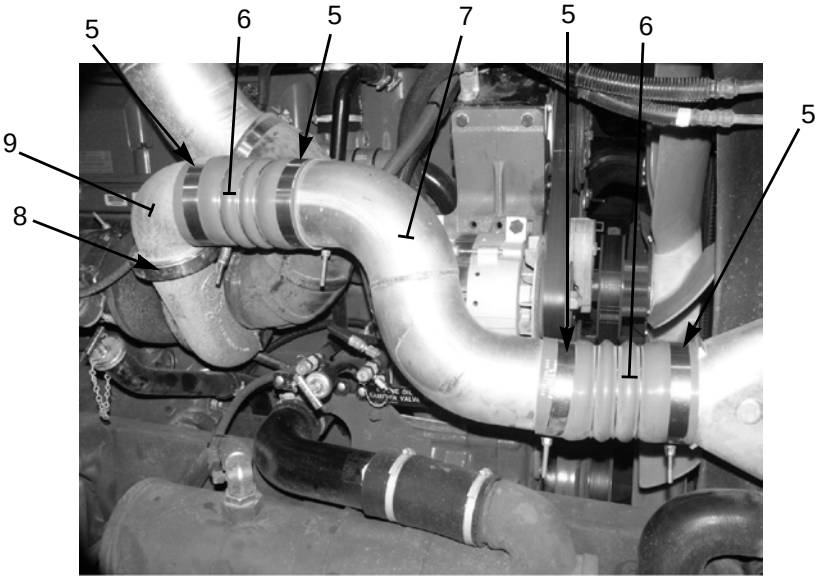

371-178

3. On left side, remove two spring clamps (10) and hose (11).

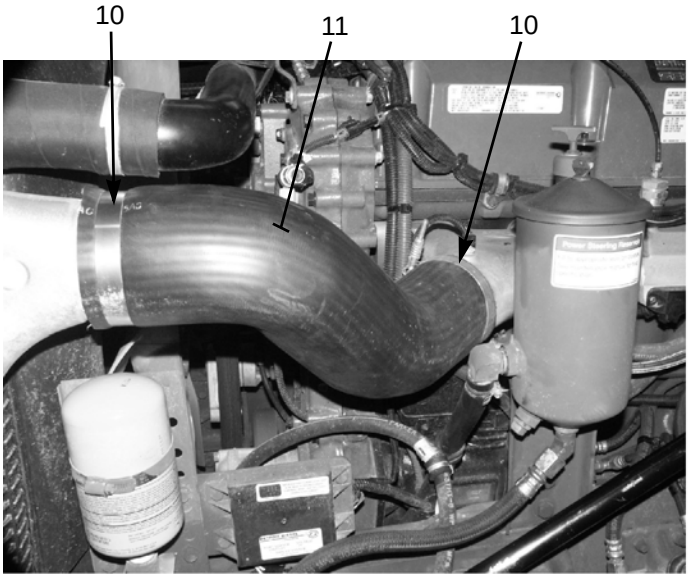

371-179

INSTALLATION

1. On left side, install hose (11) with two spring clamps (10).
2. On right side, install tube (7), two hoses (6), and elbow (9) with four spring clamps (5) and clamp (8).

INSTALLATION - CONTINUED

3. Install elbow hose (4), tube (3), and elbow hose (1) with four hose clamps (2).

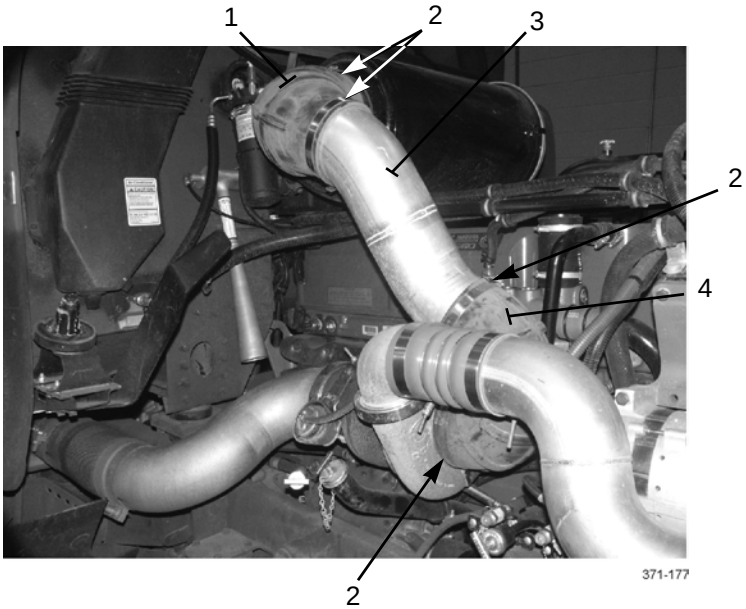

END OF WORK PACKAGE

RADIATOR AIR RECIRCULATION SHIELD ASSEMBLIES REPLACEMENT 0043 00

THIS WORK PACKAGE COVERS

Top Air Recirculation Shield Assembly Replacement; Bottom Air Recirculation Shield Replacement; Side Air Recirculation Shield Assemblies: Removal, Installation

INITIAL SETUP

Tools and Special Tools

Tool kit, general mechanic's (Item 50, WP 0306 00)

Sling, nylon (Item 39, WP 0306 00)

TOP AIR RECIRCULATION SHIELD ASSEMBLY REPLACEMENT

1. Remove two screws (2), washers (3), and top shield assembly (1) from radiator (4).
2. Install top shield assembly (1) to radiator (4) with two washers (3) and screws (2).

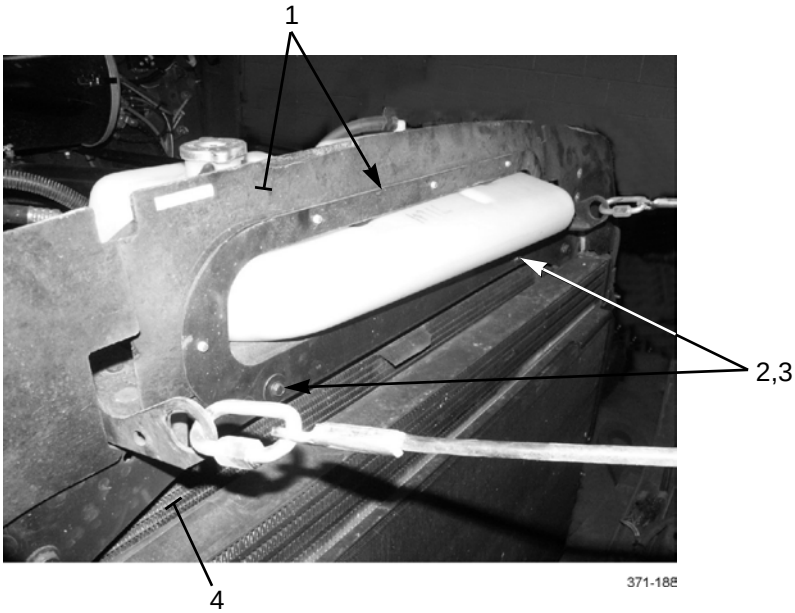

BOTTOM AIR RECIRCULATION SHIELD REPLACEMENT

1. Remove nut (6), washer (7), hose clamp (10) with coolant overflow hose (11) (right-side only), washer (8), and screw (9) from bottom of side shield assembly (5) and bottom shield (12).

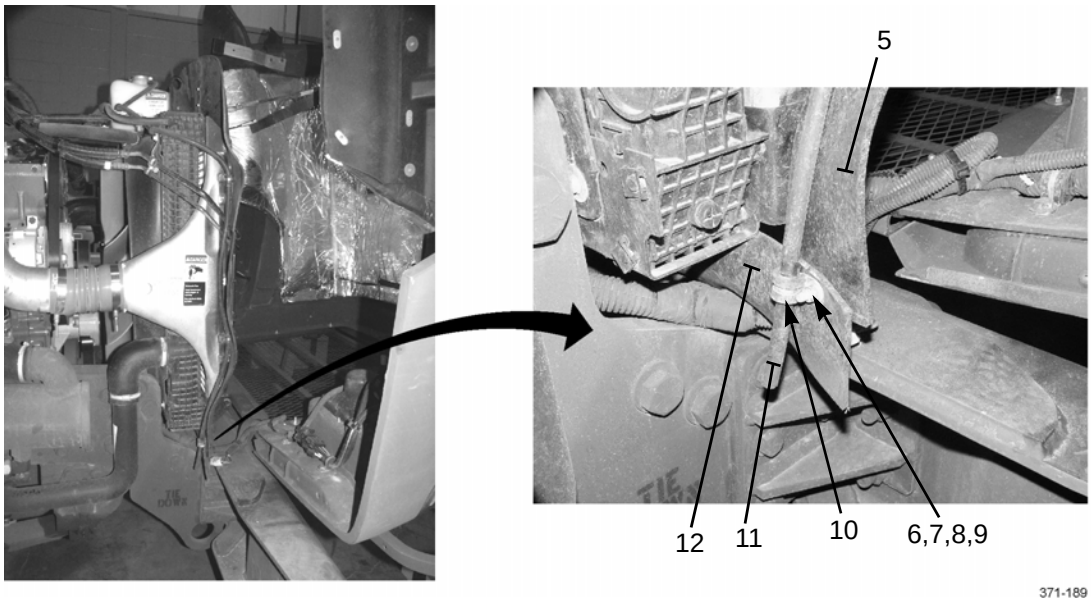

2. Remove five screws (13), washers (14), nuts (15), and bottom shield (12) from radiator (4).

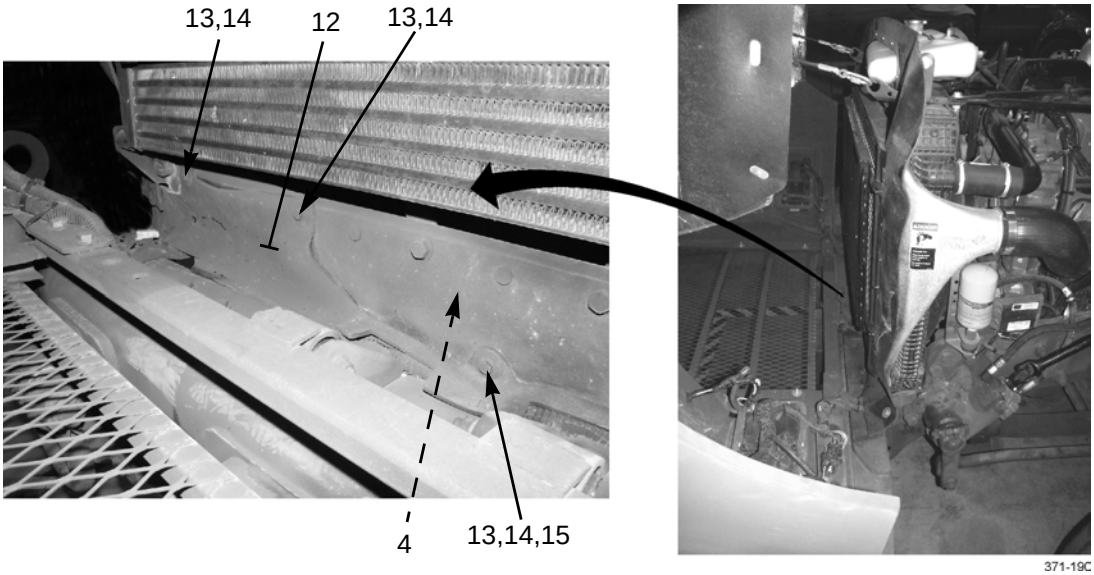

3. Install bottom shield (12) to radiator (4) with five washers (14), screws (13) and nuts (15).

NOTE

Hose clamp that secures coolant overflow hose is located only on right side of vehicle.

BOTTOM AIR RECIRCULATION SHIELD REPLACEMENT - CONTINUED

4. Install bottom of side shield assembly (5) to bottom shield (12) with screw (9), washer (8), hose clamp (10) with coolant overflow hose (11), washer (7), and nut (6).

SIDE AIR RECIRCULATION SHIELD ASSEMBLIES REMOVAL

NOTE

- Left- and right-side air recirculation shield assemblies are replaced in a similar manner. Differences will be pointed out as they occur.
- Right-side air recirculation shield assembly is shown.

1. Remove screw (17), washer (18), and bracket (15) from top of radiator (4).

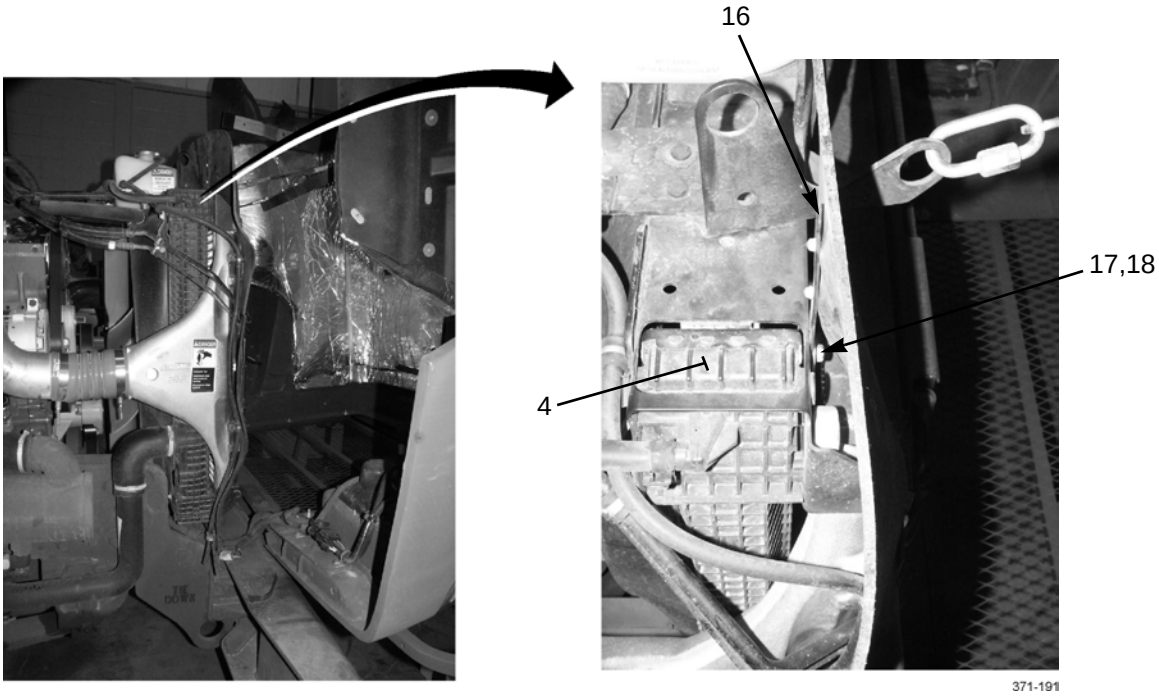

SIDE AIR RECIRCULATION SHIELD ASSEMBLIES REMOVAL - CONTINUED

2. Remove nut (22) from brace (23) and charge air cooler (24).

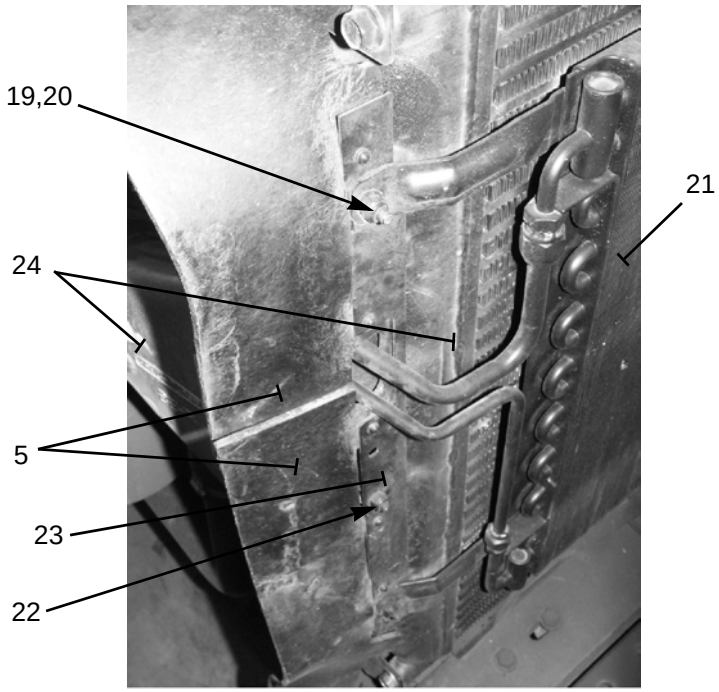

371-192

NOTE

Hose clamp that secures coolant overflow hose is located only on right side of vehicle.

3. Remove nut (6), washer (7), hose clamp (10) with coolant overflow hose (11), washer (8), and screw (9) from bottom of side shield assembly (5) and bottom shield (12).

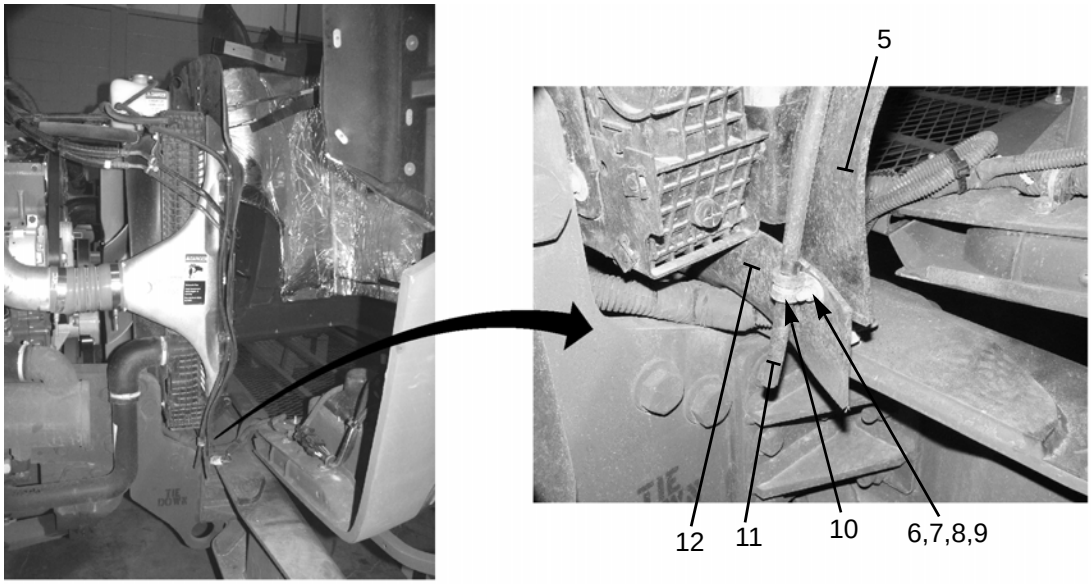

371-189

SIDE AIR RECIRCULATION SHIELD ASSEMBLIES REMOVAL - CONTINUED

4. Support side of air conditioner condenser (21) using a nylon strap or other suitable support attached to an overhead lift.

5. Remove two nuts (19) and washers (20) from air conditioner condenser (21) and brace (23). Remove side shield assembly (5).

SIDE AIR RECIRCULATION SHIELD ASSEMBLIES INSTALLATION

1. Position side shield assembly (5) between air conditioner condenser (21) mounting and charge air cooler (24) and install two washers (20) and nuts (19).

2. Remove support from air conditioner condenser (21).

NOTE

Hose clamp that secures coolant overflow hose is located only on right side of vehicle.

3. Secure bottom of side shield assembly (5) to bottom shield (12) with screw (9), washer (8), hose clamp (10) with coolant overflow hose (11), washer (7), and nut (6).

4. Install nut (22) on brace (23) and charge air cooler (24).

5. Install bracket (16) to top of radiator (4) with washer (18) and screw (17).

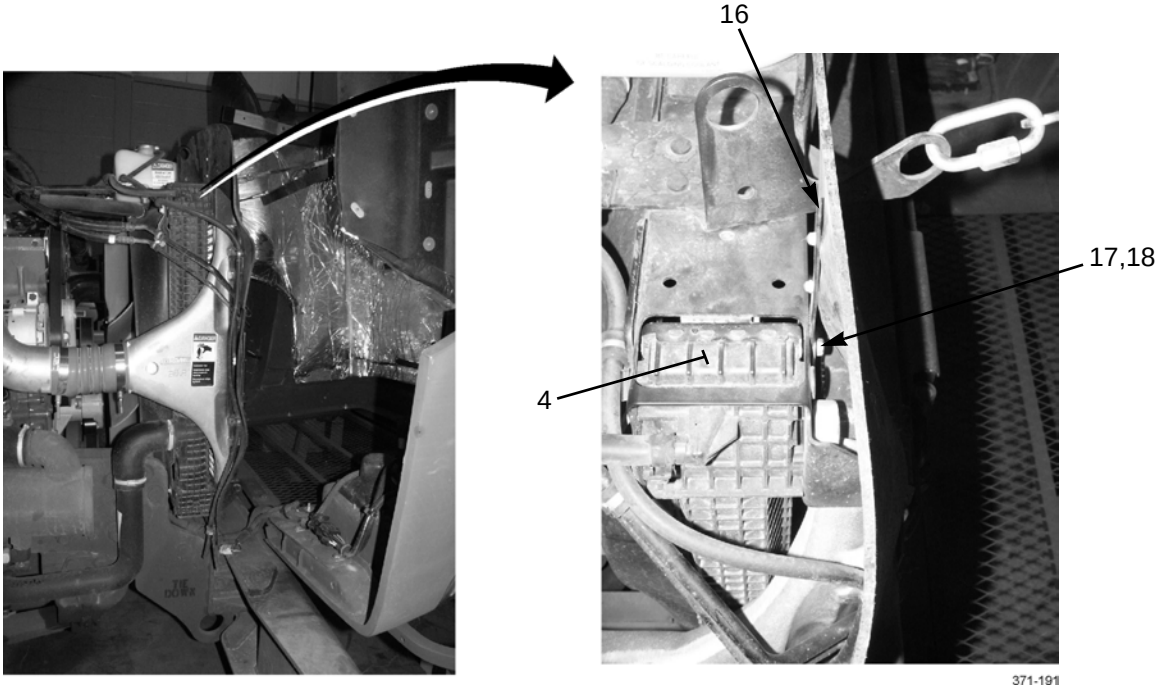

END OF WORK PACKAGE

EXHAUST SYSTEM MUFFLER, STACK, AND HEAT SHIELD REPLACEMENT 0044 00

THIS WORK PACKAGE COVERS

Heat Shield Removal, Exhaust Stack Removal, Muffler Removal, Muffler Mounting Brackets Removal, Muffler Mounting Brackets Installation, Muffler Installation, Exhaust Stack Installation, Heat Shield Installation

INITIAL SETUP

Tools and Special Tools

Tool kit, general mechanic's (Item 50, WP 0306 00)

Materials/Parts

Bushing (P/N 1449-380-55640) (4)

Materials/Parts - Continued

Clamp, seal (P/N 04-19249-000)

Personnel Required

Two

WARNING

Allow exhaust system components to cool before performing maintenance. Handling hot exhaust system components could cause serious burns.

HEAT SHIELD REMOVAL

1. With assistance, remove eight bolts (1), washers (4), and heat shield (3) from retaining clamps (2).

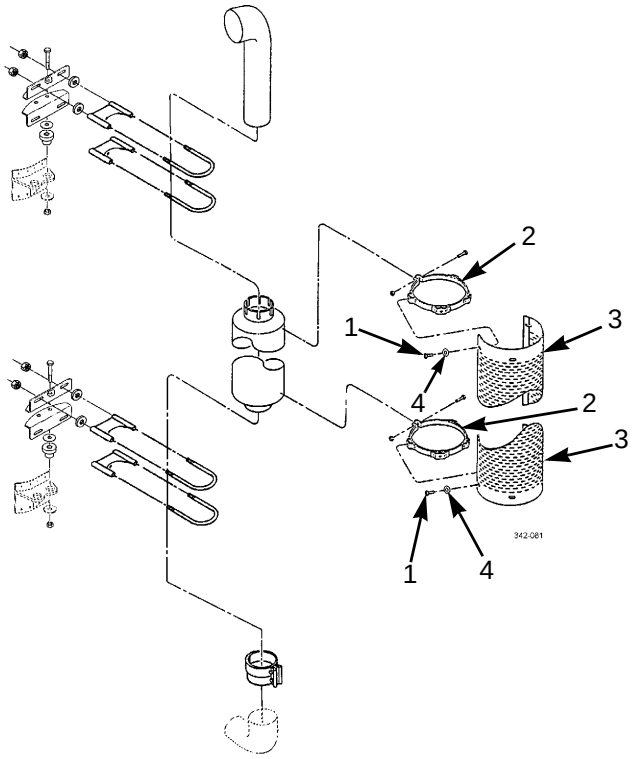

EXHAUST STACK REMOVAL

Remove four nuts (5), washers (7), two saddle clamps (8), and exhaust stack (9) from muffler (21).

MUFFLER REMOVAL

NOTE

Assistance is required to hold muffler steady while removing hardware.

1. Remove four nuts (19), washers (20), two saddle clamps (12), muffler (21), and seal clamp (13) from exhaust pipe. Discard seal clamp.
2. Remove two nuts (10), bolts (11), and retaining clamps (2) from muffler (21).

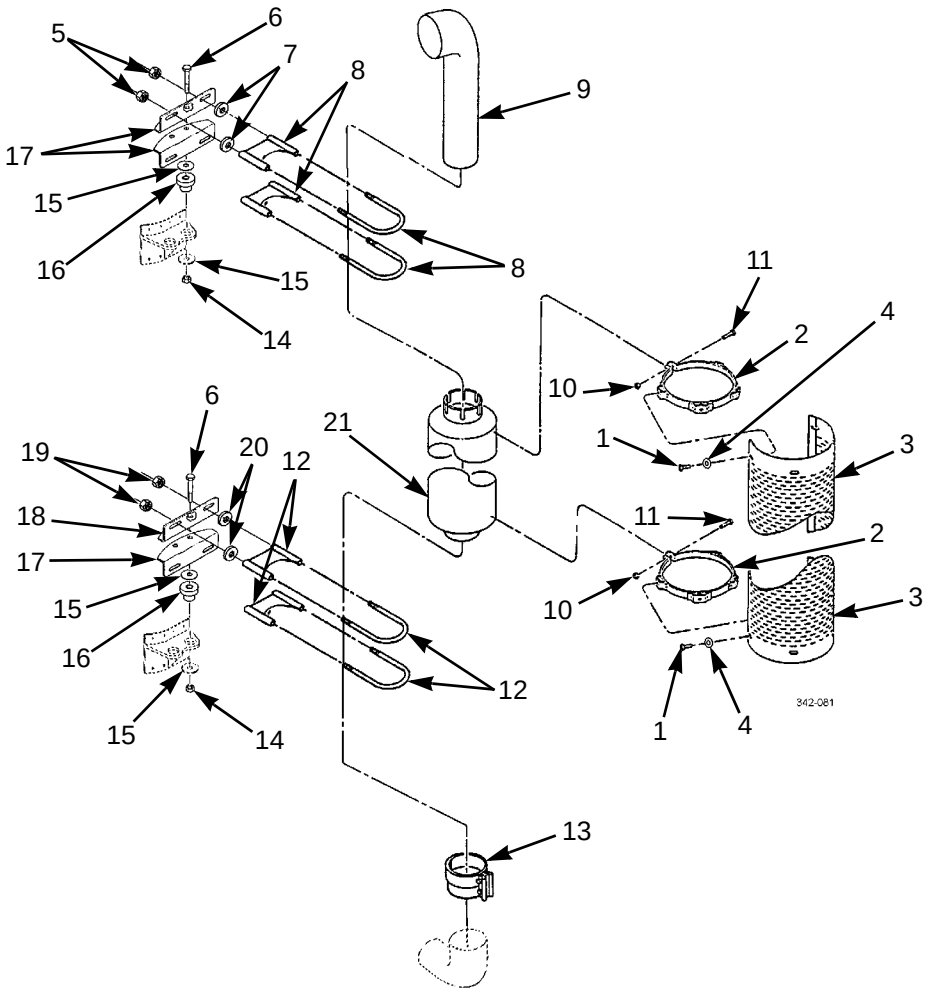

MUFFLER MOUNTING BRACKETS REMOVAL

1. Remove four nuts (14), eight washers (15), four screws (6), and two muffler mounting brackets (17 and 18) from vehicle.
2. Remove four bushings (16) from two muffler mounting brackets (17 and 18). Discard bushings.

MUFFLER MOUNTING BRACKETS INSTALLATION

1. Position four new bushings (16) on mounting locations.
2. Install two muffler mounting brackets (17 and 18) with four screws (6), eight washers (15), and four nuts (14).

MUFFLER INSTALLATION

1. Install two retaining clamps (2) on muffler (21) with two bolts (11) and nuts (10).

NOTE

- New seal clamp may leak until exhaust system is thoroughly heated and sealed.
- Ensure muffler with heat shield retaining clamps are positioned to allow mounting of heat shield.

2. Install new seal clamp (13) and muffler (21) on exhaust pipe with two saddle clamps (12), four washers (20), and nuts (19). Tighten seal clamp.

EXHAUST STACK INSTALLATION

NOTE

Ensure opening of exhaust stack is to the rear of the vehicle.

With assistance, install exhaust stack (9) on muffler (21) with two saddle clamps (8), four washers (7), and nuts (5).

HEAT SHIELD INSTALLATION

1. Ensure retaining clamps (2) are in place and secure.
2. With assistance, install heat shield (3) on retaining clamps (2) with eight washers (4) and bolts (1).

END OF WORK PACKAGE

EXHAUST SYSTEM FLEX PIPE, CLAMPS, AND HEAT SHIELD REPLACEMENT 0045 00

THIS WORK PACKAGE COVERS

Removal, Installation

INITIAL SETUP

Tools and Special Tools

Tool kit, general mechanic's (Item 50, WP 0306 00)

Materials/Parts

Clamp, seal (P/N 04-19249-000) (5)

Nut, lock (P/N M45913/1-8CG5C) (2)

References

TM 9-2320-302-10

WP 0044 00

WARNING

Allow exhaust system components to cool before performing maintenance. Handling hot exhaust system components could cause serious burns.

REMOVAL

NOTE

Perform step 1, as necessary, to provide additional clearance when removing ALL components of exhaust system.

1. Remove exhaust system muffler, stack and heat shield (WP 0044 00).

REMOVAL - CONTINUED

2. Loosen coupling clamp (13) holding exhaust pipe (12) to turbocharger.
3. Loosen seal clamp (11) and remove exhaust pipe (12), coupling clamp (13), and seal clamp from exhaust hose (10). Discard seal clamp.
4. Loosen seal clamp (9) and remove exhaust hose (19) and seal clamp from exhaust pipe (8). Discard seal clamp.
5. Remove four nuts (16) and two saddle clamps (14) holding exhaust pipe (8) to two hanger brackets (15).
6. Loosen seal clamp (7) and remove exhaust pipe (8) and seal clamp from exhaust hose (4). Discard seal clamp.

NOTE

Perform step 7 if hanger brackets are damaged.

7. Remove two locknuts (17), four washers (6), two screws (5), and two hanger brackets (15) from frame rail. Discard locknuts.
8. Remove remaining components of exhaust system from vehicle as an assembly.
9. Loosen seal clamp (3) and remove exhaust hose (4) and seal clamp from exhaust elbow (2). Discard seal clamp.

NOTE

Note position of heat shields for installation.

10. Loosen hose clamp of heat shield (1) and remove heat shield from exhaust elbow (2).
11. Loosen hose clamp of heat shield (20) and remove heat shield from exhaust elbow (19).
12. Loosen seal clamp (18) and separate exhaust elbow (19), seal clamp, and exhaust elbow (2). Discard seal clamp.

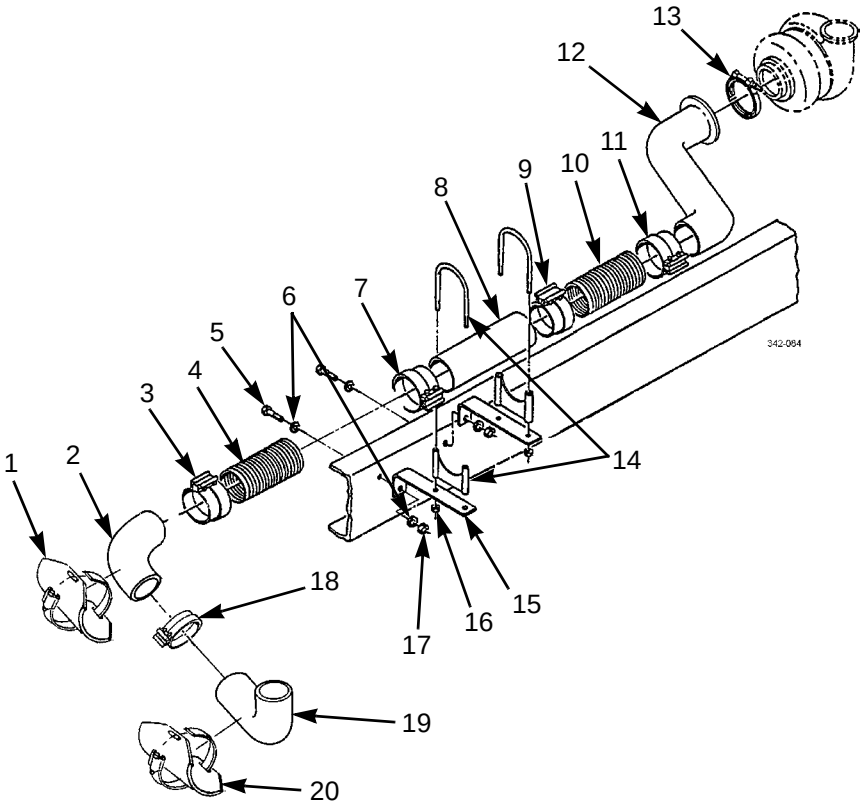

INSTALLATION

NOTE

For ease in installation, fully tighten five seal clamps, two hose clamps of heat shields, two saddle clamps and coupling clamp AFTER all components are installed.

1. Install exhaust elbow (2) to exhaust elbow (19) with new seal clamp (18).
2. Install heat shield (20) to exhaust elbow (19).
3. Install heat shield (1) to exhaust elbow (2).
4. Install new seal clamp (3) and exhaust hose (4) to exhaust elbow (2).
5. Position components to vehicle as an assembly.
6. Install two hanger brackets (15) to frame rail with two screws (5), four washers (6), and two new locknuts (17).
7. Install new seal clamp (7) and exhaust pipe (8) to exhaust hose (4).
8. Install exhaust pipe (8) to two hanger brackets (15) with two saddle clamps (14) and four nuts (16).
9. Install new seal clamp (9) and exhaust hose (10) to exhaust pipe (8).
10. Position coupling clamp (13) over exhaust pipe (12) and install new seal clamp (9) and exhaust pipe to exhaust hose (10).
11. Secure other end of exhaust pipe (12) to turbocharger with coupling clamp (13).
12. Install exhaust system muffler, stack and heat shield (WP 0044 00).

NOTE

New seal clamps may leak until exhaust system is thoroughly heated and sealed.

13. Operate vehicle (TM 9-2320-302-10). Allow exhaust system to heat up and seal.

END OF WORK PACKAGE

DRAIN AND FILL COOLING SYSTEM 0046 00

THIS WORK PACKAGE COVERS

Draining, Filling

INITIAL SETUP

Tools and Special Tools

Tool kit, general mechanic's (Item 50, WP 0306 00)

Pan, drain (Item 29, WP 0306 00)

Materials/Parts

Antifreeze, ethylene glycol (Item 6 or 7, WP 0306 00)

Rags, wiping (Item 31, WP 0306 00)

References

TM 9-2320-302-10

DRAINING

WARNING

DO NOT remove radiator cap or drain antifreeze unless engine is cold. Remove radiator cap in two steps. First, place a thick cloth over cap and slowly turn cap left to first stop. Pause and allow pressure to escape. Turn cap further left until it can be removed. This is a pressurized cooling system and escaping steam, hot water or coolant will cause serious burns.

1. Remove cap (1).

NOTE

Cooling system capacity is 65 qt. (61.51 l). Have suitable drain pans available.

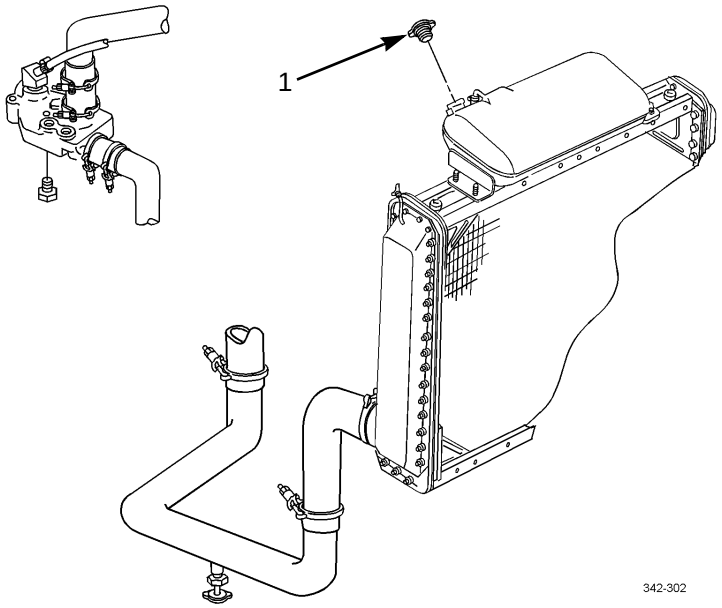

DRAINING - CONTINUED

2. Open draincock (2) on lower radiator pipe (3). Allow antifreeze to drain.
3. Remove plug (4) from thermostat housing (5). Allow antifreeze to drain.
4. Close draincock (2) and install plug (4).

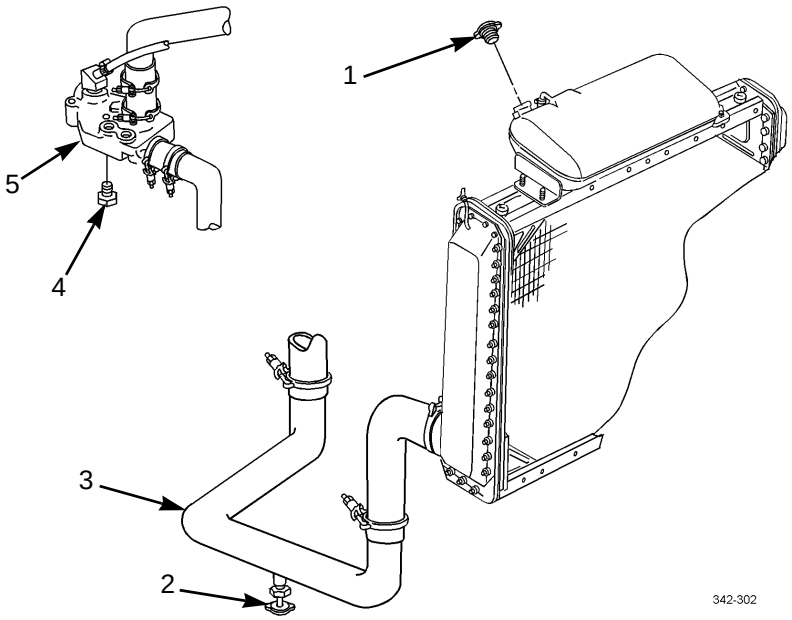

FILLING

1. Fill radiator with antifreeze in accordance with WP 0022 00.
2. Install radiator cap (1).
3. Start engine and allow engine to reach operating temperature (TM 9-2320-302-10).
4. Allow antifreeze to circulate through cooling system. Check for coolant leaks.
5. Shut off engine and allow engine to cool.

WARNING

DO NOT remove radiator cap or drain antifreeze unless engine is cold. Remove radiator cap in two steps. First, place a thick cloth over cap and slowly turn cap left to first stop. Pause and allow pressure to escape. Turn cap further left until it can be removed. This is a pressurized cooling system and escaping steam, hot water or coolant will cause serious burns.

6. Remove cap (1) and check antifreeze level. Add antifreeze, if necessary, in accordance with WP 0022 00.
7. Install cap (1).

END OF WORK PACKAGE

COOLANT HOSES, PIPES, AND CLAMPS REPLACEMENT (M915A3 OLD MODEL) 0047 00

THIS WORK PACKAGE COVERS

Removal, Installation

INITIAL SETUP

Tools and Special Tools

Tool kit, general mechanic's (Item 50, WP 0306 00)

Pliers, slip joint (Item 35, WP 0306 00)

Pliers, hose clamp (Item 33, WP 0306 00)

Materials/Parts

Nut, lock (P/N M45913/1-4CG5C) (2)

Compound, sealing, pipe (Item 13, WP 0305 00)

References

TM 9-2320-302-10

Equipment Condition

Cooling system drained (WP 0046 00)

REMOVAL

1. Loosen four clamps (2) and remove two hoses (3) and pipe (1) from thermostat housing (12) and radiator (8).
2. Remove two locknuts (11), four washers (5), two screws (4), and four clamps (6) from radiator support rod (10) and hose (7). Discard locknuts.
3. Loosen two clamps (9) and remove hose (7) from radiator (8) and elbow (13).

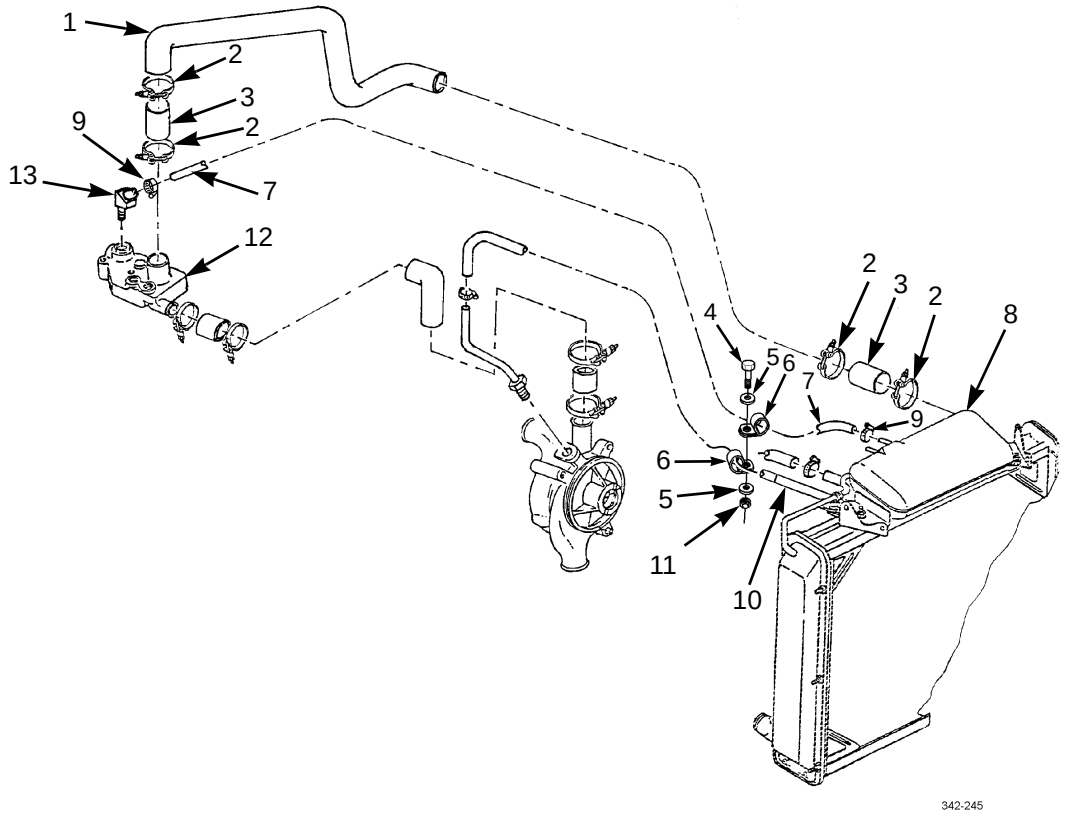

REMOVAL - CONTINUED

4. Remove elbow (13) from thermostat housing (12).
5. Loosen two clamps (14) and remove hose (15) from radiator (8) and water pump tube (19).
6. Remove water pump tube (19) from water pump (18).
7. Loosen four clamps (16) and remove two hoses (17) and pipe (20) from thermostat housing (12) and water pump (18).

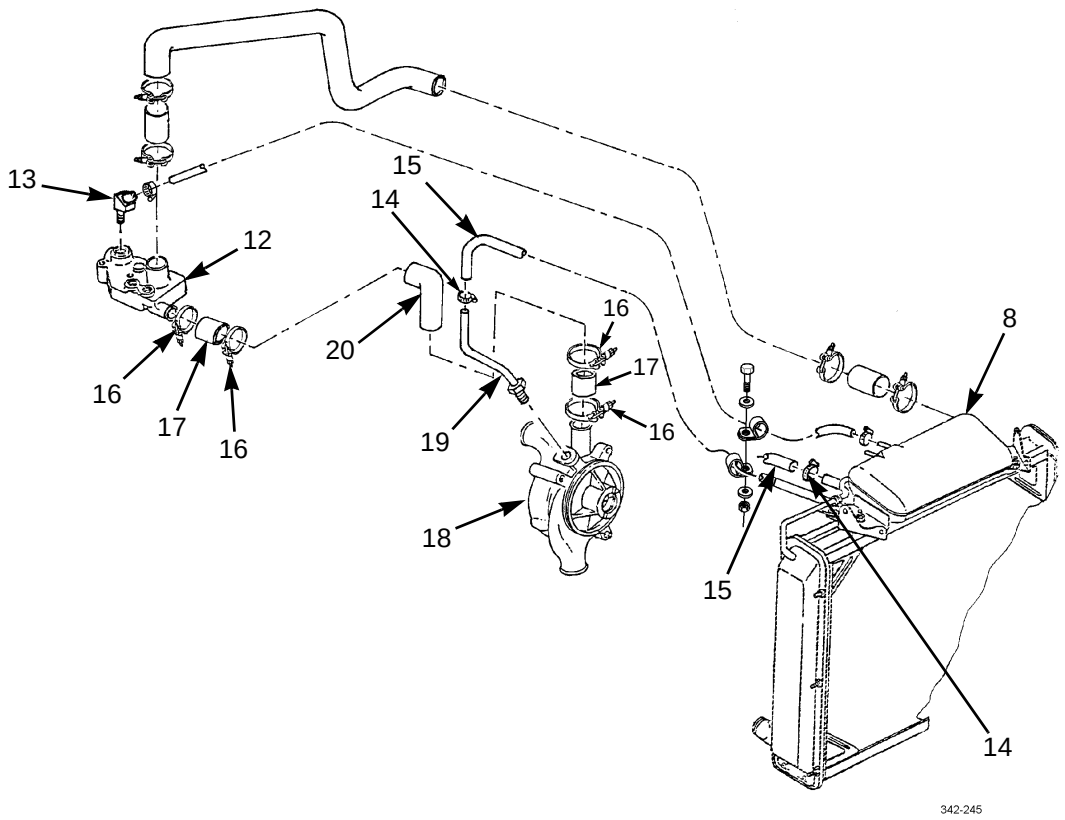

8. Loosen four clamps (25) and remove hose (26), pipe (27), and hose (28) from transmission oil cooler (43) and water pump (18).
9. Loosen four clamps (30) and remove hose (31), pipe (29), and hose (37) from engine oil cooler (44) and transmission oil cooler (43).
10. Loosen two clamps (22) and remove hose (21) from elbow (23) and water filter (42).
11. Remove elbow (23) and adapter (24) from engine oil cooler (44).
12. Loosen two clamps (36) and remove hose (41) from water filter (42) and elbow (32).
13. Remove elbow (32) and adapter (35) from water pump (18).
14. Loosen four clamps (33) and remove hose (34), pipe (39), and hose (38) from water pump (18) and radiator (8).
15. Remove draincock (40) from pipe (39).

REMOVAL - CONTINUED

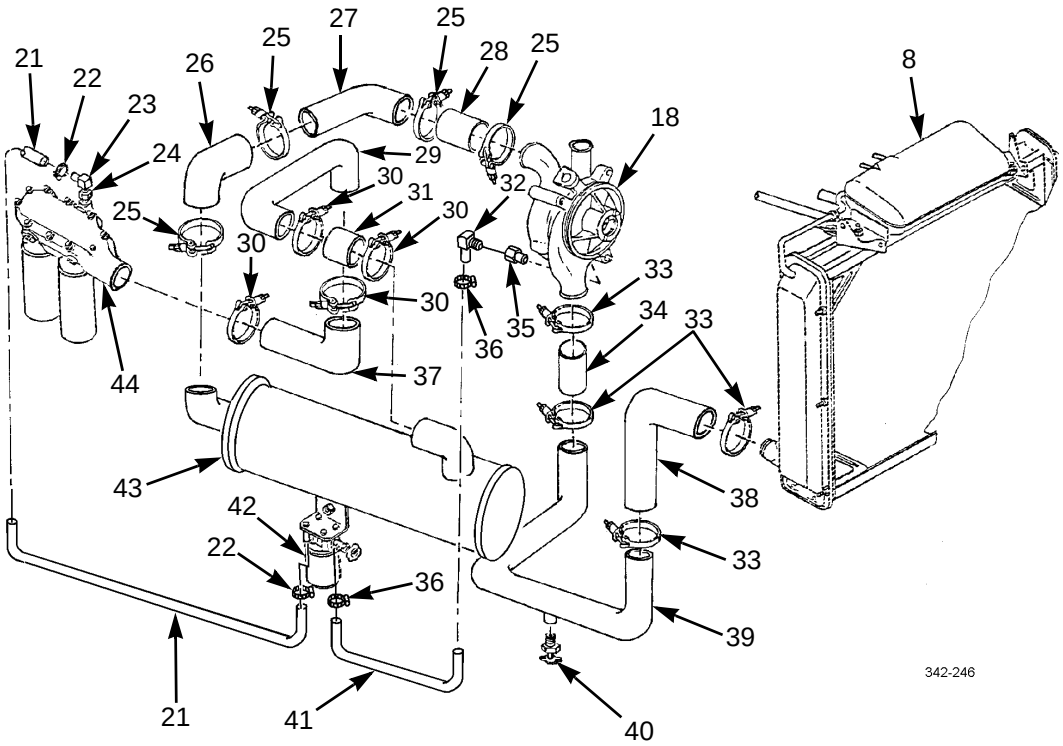

INSTALLATION

WARNING

Adhesives and sealing compounds can burn easily, can give off harmful vapors, and are harmful to skin and clothing. To avoid injury or death, keep away from open fire and use in a well-ventilated area. If adhesive or sealing compound contact skin or clothing, wash immediately with soap and water.

1. Lightly coat threads of draincock (40) with pipe sealing compound. Install draincock on pipe (39).
2. Install hose (38), pipe (39), and hose (34) on radiator (8) and water pump (18) with four clamps (33).
3. Lightly coat threads of adapter (35) and elbow (32) with pipe sealing compound. Install adapter and elbow on water pump (18).
4. Install hose (41) on elbow (32) and water filter (42) with two clamps (36).
5. Lightly coat threads of adapter (24) and elbow (23) with pipe sealing compound. Install adapter and elbow on engine oil cooler (44).
6. Install hose (21) on water filter (42) and elbow (23) with two clamps (22).
7. Install hose (37), pipe (29), and hose (31) on transmission oil cooler (43) and engine oil cooler (44) with four clamps (30).
8. Install hose (28), pipe (27), and hose (26) on water pump (18) and transmission oil cooler (43) with four clamps (25).

INSTALLATION - CONTINUED

9. Install pipe (20) and two hoses (17) on water pump (18) and thermostat housing (12) with four clamps (16).
10. Light coat threads of water pump tube (19) with pipe sealing compound. Install water pump tube on water pump (18).
11. Install hose (15) on water pump tube (19) and radiator (8) with two clamps (14).
12. Lightly coat threads of elbow (13) with pipe sealing compound. Install elbow on thermostat housing (12).
13. Install hose (7) on elbow (13) and radiator (8) with two clamps (9).
14. Install four clamps (6) on hose (7) and radiator support rod (10) with two screws (4), four washers (5), and two new locknuts (11).
15. Install pipe (1) and two hoses (3) on radiator (8) and thermostat housing (12) with four clamps (2).

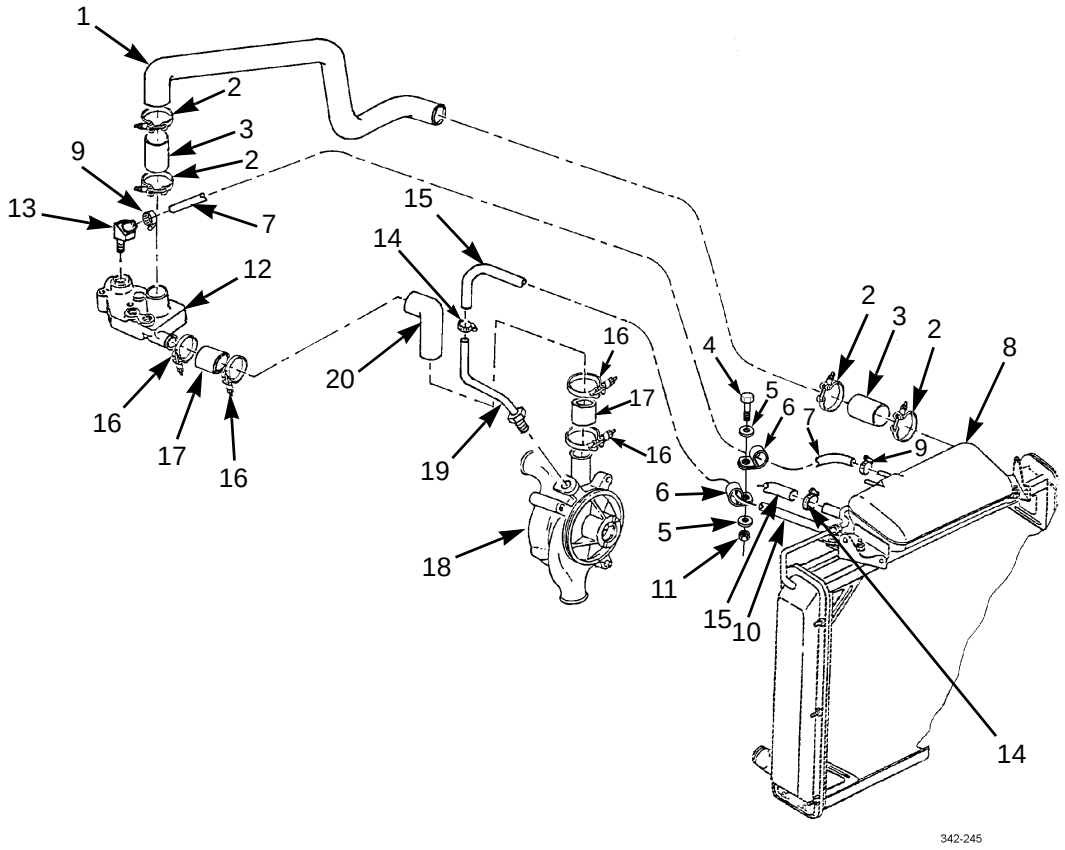

16. Fill cooling system (WP 0046 00).

END OF WORK PACKAGE

COOLANT HOSES, PIPES, AND CLAMPS REPLACEMENT (M915A3 NEW MODEL, M916A3, M917A2)

0048 00

THIS WORK PACKAGE COVERS

Removal, Installation

INITIAL SETUP

Tools and Special Tools

Tool kit, general mechanic's (Item 50, WP 0306 00)

Pliers, slip joint (Item 35, WP 0306 00)

Pliers, hose clamp (Item 33, WP 0306 00)

Materials/Parts

Compound, sealing, pipe (Item 13, WP 0305 00)

Equipment Condition

Cooling system drained (WP 0046 00)

REMOVAL

NOTE

Remove, as necessary, all locknuts, screws, and hose support clamps along length of hoses.

1. Loosen four clamps (10) and remove two hoses (11 and 13) and pipe (12) from upper-left side of radiator (1) and thermostat housing (8).
2. Loosen two clamps (2) and remove hose (4) from coolant overflow reservoir (6) and elbow (9) of thermostat housing (8).
3. Remove elbow (9) from thermostat housing (8).
4. Loosen two clamps (3) and remove hose (5) from coolant overflow reservoir (6) and upper-right side of radiator (1).
5. Remove vent hose (7) from coolant overflow reservoir (6) and along right side of radiator (1).

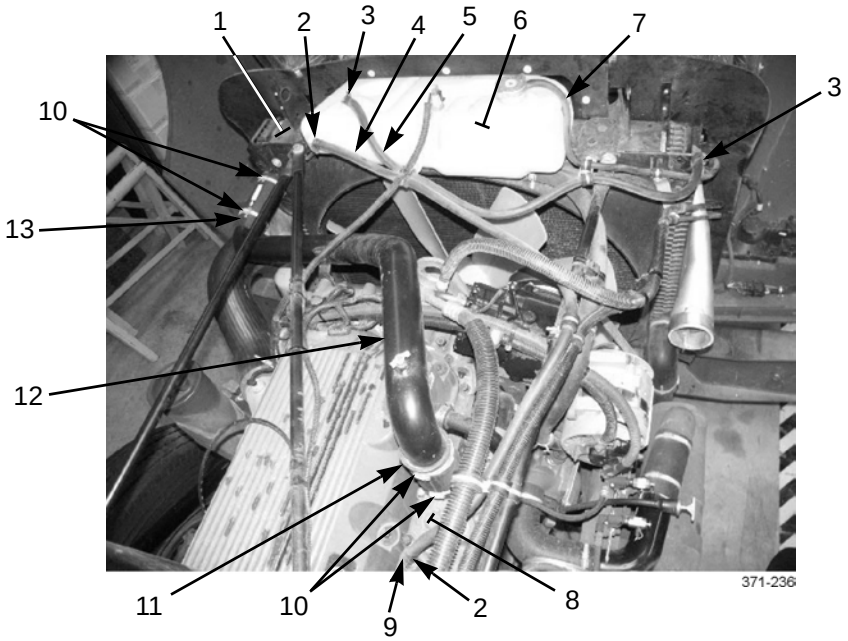

REMOVAL - CONTINUED

6. Loosen two clamps (15) and remove hose (14) from bottom of coolant overflow reservoir (6) and tube (18) from water pump (17).
7. Remove tube (18) and adapter (16) from water pump (17).
8. Loosen four clamps (19) and remove two hoses (20) and pipe (21) from water pump (17) and thermostat housing (8).

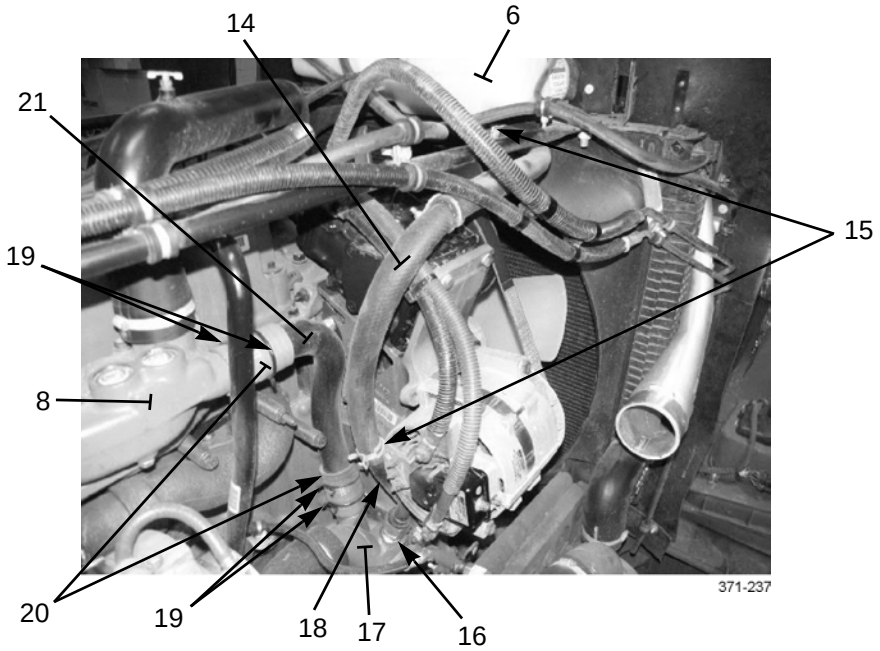

9. Loosen four clamps (22) and remove elbow hose (23), elbow pipe (24), and hose (25) from water pump (17) and transmission oil cooler (26).
10. Loosen four clamps (28) and remove elbow hose (29), elbow pipe (27), and elbow hose (30) from bottom of transmission oil cooler (26) and engine oil cooler (31).

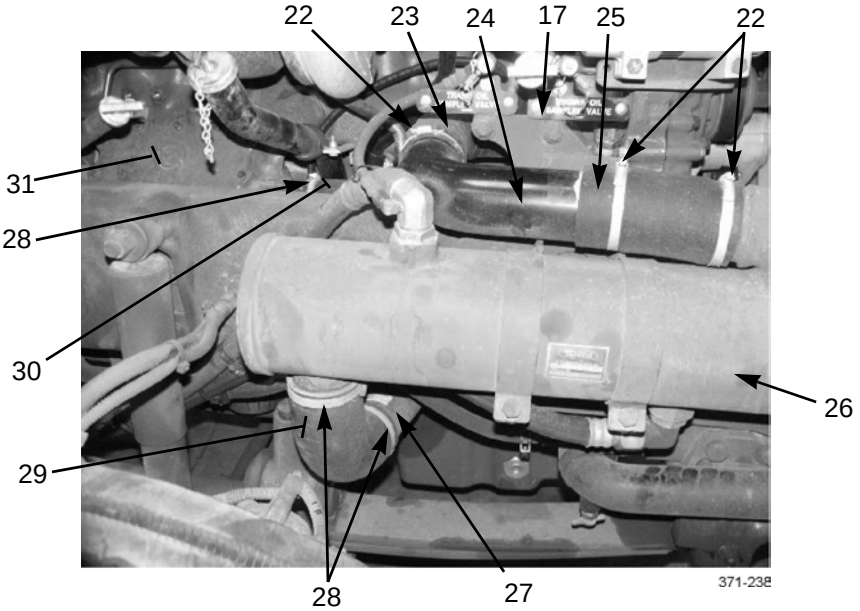

COOLANT HOSES AND PIPES REPLACEMENT (M915A3 NEW MODEL, M916A3, M917A2) - CONTINUED 0048 00

REMOVAL - CONTINUED

11. Loosen two clamps (40) and remove hose (38) from valve (39) of water filter (37) and elbow (32) of engine oil cooler (31).
12. Remove elbow (32) and adapter (33) from engine oil cooler (31).
13. Loosen clamp (35) and disconnect hose (34) from valve (36) of water filter (37).

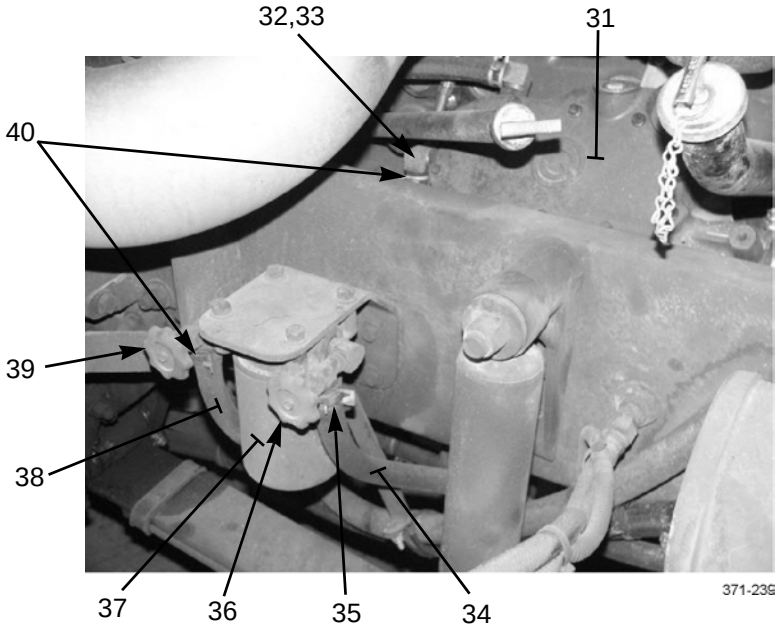

14. At other end of hose (34), loosen clamp (45) and remove hose from fitting (44) at pipe (43).
15. Loosen two clamps (42) and disconnect elbow hose (41) and pipe (43) from lower-left side of radiator (1).

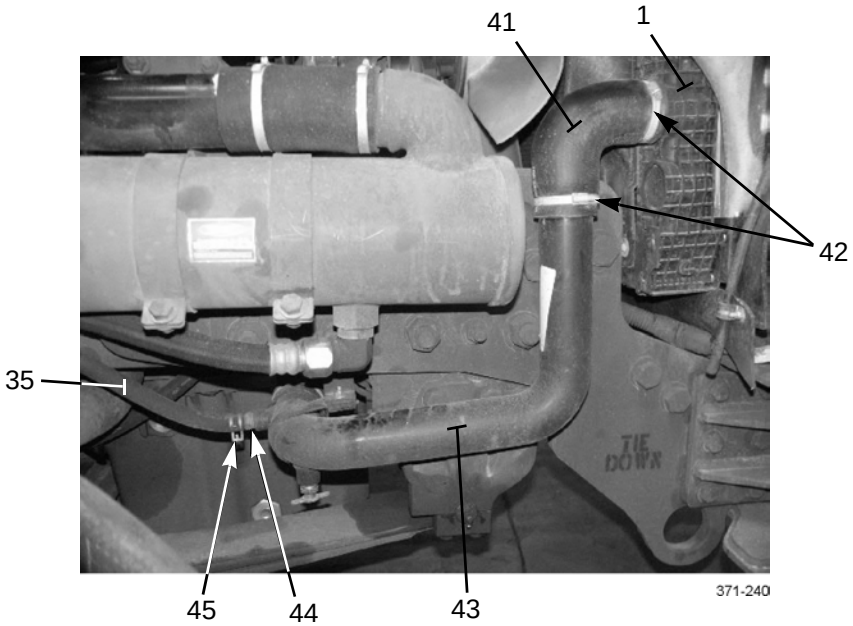

REMOVAL - CONTINUED

16. At other end of pipe (43), loosen two clamps (47) and remove pipe and elbow hose (46) from bottom of water pump (17).

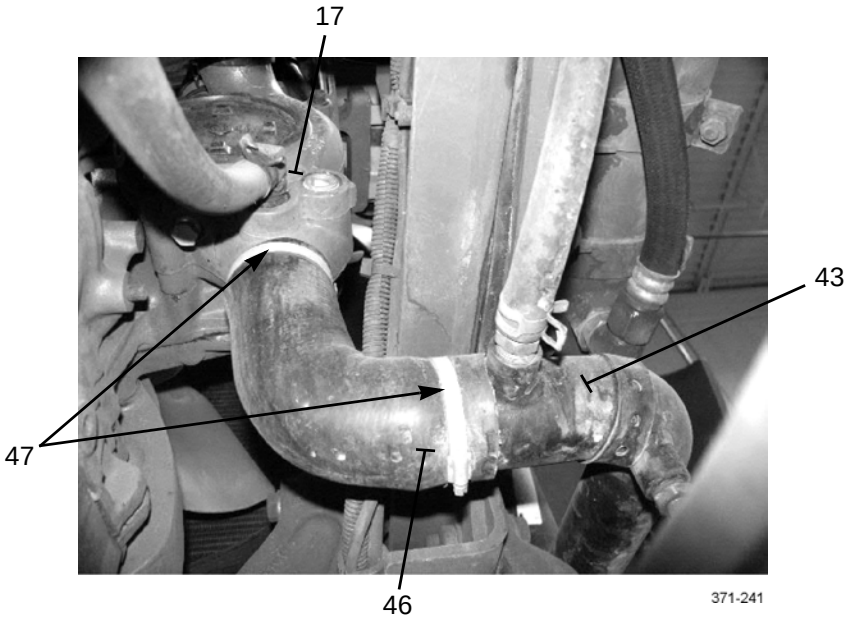

INSTALLATION

WARNING

Adhesives and sealing compounds can burn easily, can give off harmful vapors, and are harmful to skin and clothing. To avoid injury or death, keep away from open fire and use in a well-ventilated area. If adhesive or sealing compound contacts skin or clothing, wash immediately with soap and water.

1. Install elbow hose (46) and pipe (43) to bottom of water pump (17) with two clamps (47).
2. At other end of pipe (43), install elbow hose (41) and pipe to lower-left side of radiator (1) with two clamps (42).
3. Lightly coat threads of fitting (44) with pipe sealing compound and install fitting to pipe (43). Install hose (34) to fitting with clamp (45).

INSTALLATION - CONTINUED

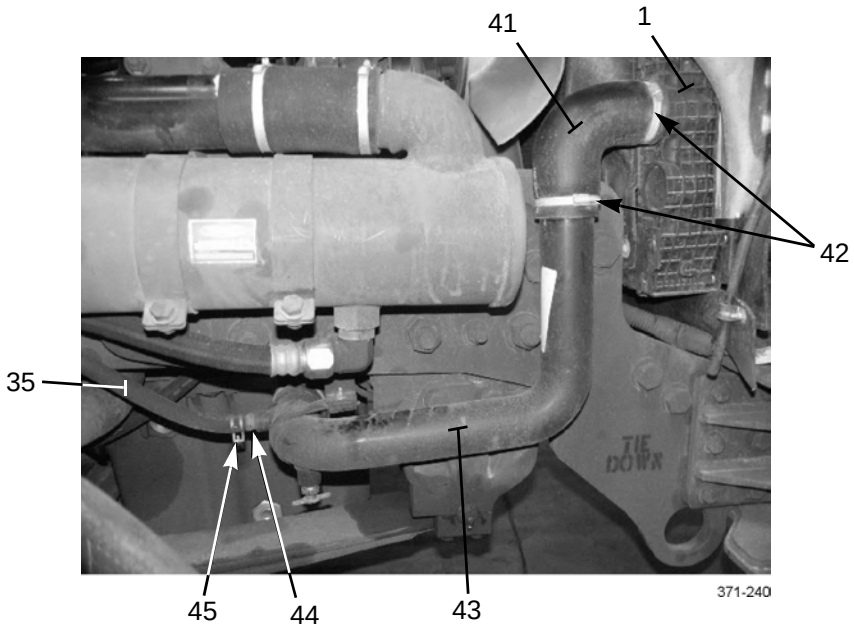

4. At other end of hose (34), connect hose to valve (36) of water filter (37).
5. Lightly coat threads of adapter (33) and elbow (32) with pipe sealing compound and install adapter and elbow to engine oil cooler (31).
6. Install hose (38) to adapter (33) of engine oil cooler (31) and valve (39) of water filter (37) with two clamps (40).

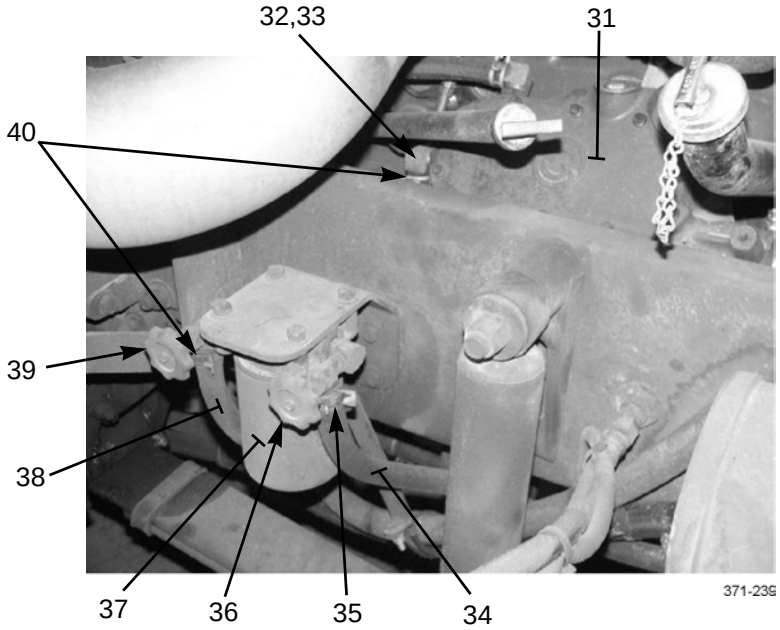

INSTALLATION - CONTINUED

7. Install elbow hose (30), elbow pipe (27), and elbow hose (29) to engine oil cooler (31) and bottom of transmission oil cooler (26) with four clamps (28).
8. Install hose (25), elbow pipe (24), and elbow hose (23) to transmission oil cooler (26) and water pump (17) with four clamps (22).

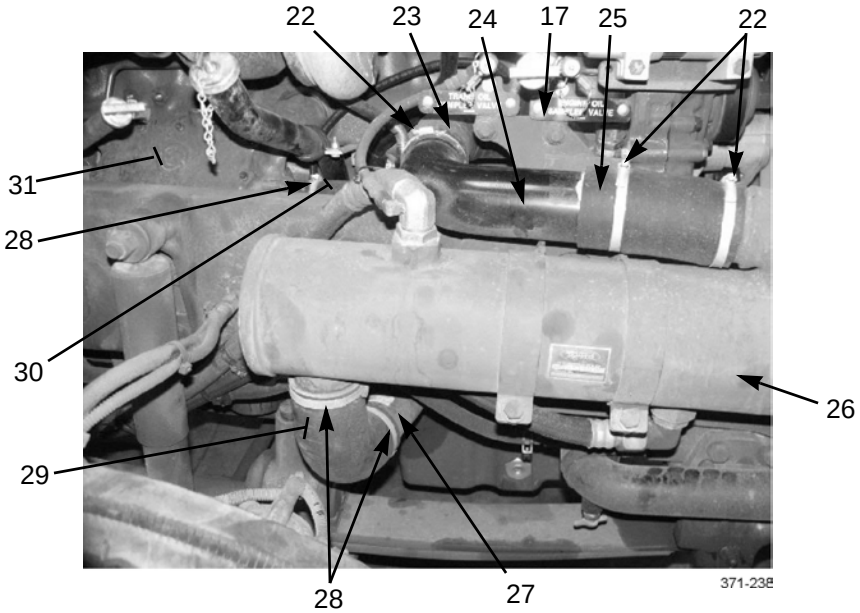

9. Install pipe (21) and two hoses (20) to thermostat housing (8) and pipe (21) with four clamps (19).
10. Lightly coat threads of adapter (16) with pipe sealing compound and install adapter and tube (18) to water pump (17).
11. Install hose (14) to tube (18) of water pump (17) and bottom of coolant overflow reservoir (6) with two clamps (15).

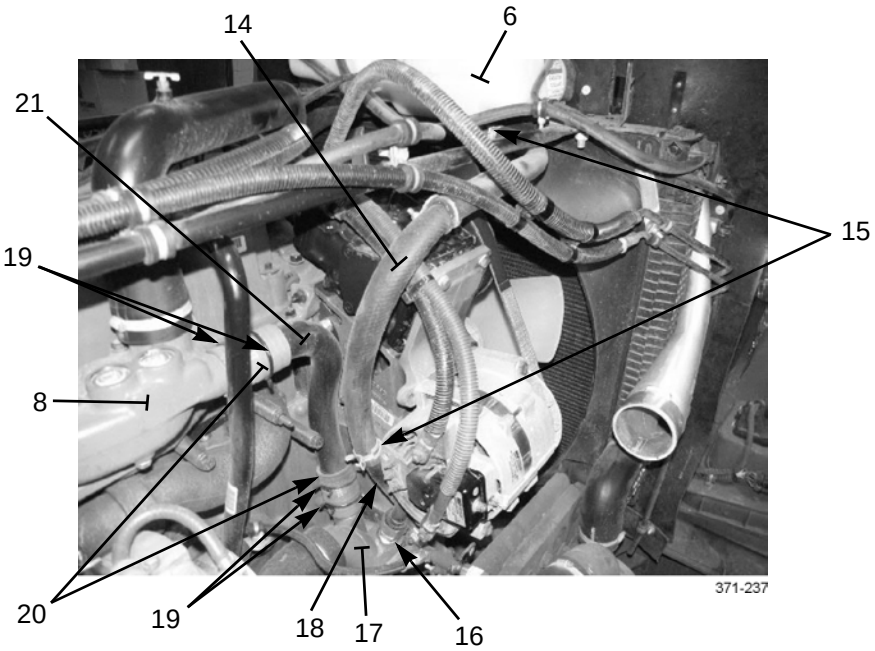

INSTALLATION - CONTINUED

12. Install vent hose (7) to coolant overflow reservoir (6) and along right side of radiator (1).
13. Install hose (5) to upper-right side of radiator (1) and coolant overflow reservoir (6) with two clamps (3).
14. Lightly coat threads of elbow (9) with pipe sealing compound and install elbow to thermostat housing (8).
15. Install hose (4) to elbow (9) of thermostat housing (8) and coolant overflow reservoir (6) with two clamps (2).
16. Install pipe (12) and two hoses (11 and 13) to thermostat housing (8) and upper-left side of radiator (1) with four clamps (10).

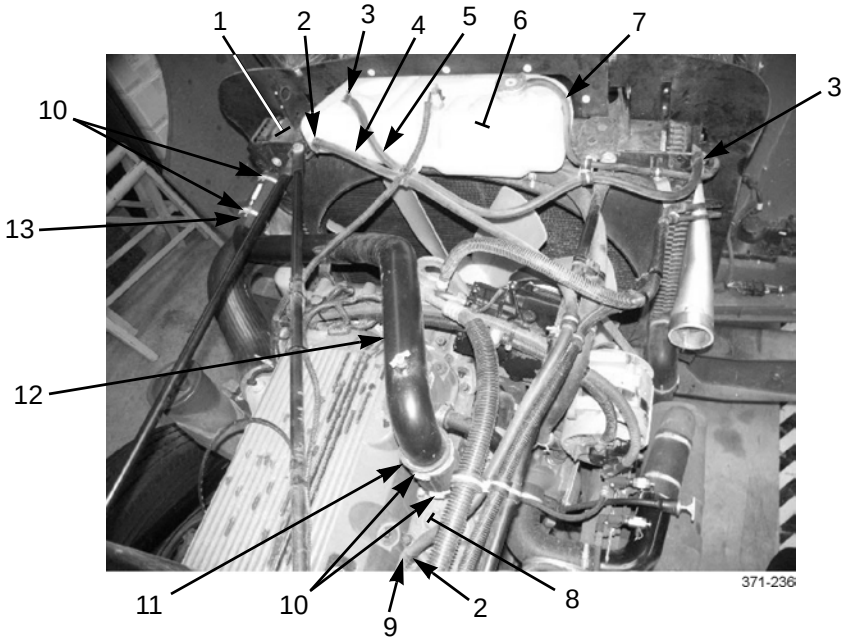

17. Fill cooling system (WP 0046 00).

END OF WORK PACKAGE

THERMOSTAT AND THERMOSTAT HOUSING COVER REPLACEMENT 0049 00

THIS WORK PACKAGE COVERS

Removal, Installation

INITIAL SETUP

Tools and Special Tools

Tool kit, general mechanic's (Item 50, WP 0306 00)

Handle, driver (Item 15, WP 0306 00)

Installer, seal (Item 21, WP 0306 00)

Wrench, torque, 15-75 lb-ft (Item 57, WP 0306 00)

Materials/Parts

Seal, thermostat (P/N 3S9643-00) (2)

Compound, sealing, pipe (Item 13, WP 0305 00)

Oil, lubricating (Item 22, WP 0305 00)

Equipment Condition

Coolant hoses, pipes, and clamps removed (WP 0047 00 or WP 0048 00)

REMOVAL

1. Remove four bolts (3) and thermostat housing cover (2) from cylinder head (7).
2. Remove two thermostats (8) and thermostat seals (6) from thermostat housing cover (2). Discard thermostat seals.
3. Remove plug (5) from thermostat housing cover (2).
4. Remove two pipe plugs (4) and two pipe plugs (1) from thermostat housing cover (2).

INSTALLATION


WARNING

Adhesives and sealing compounds can burn easily, can give off harmful vapors, and are harmful to skin and clothing. To avoid injury or death, keep away from open fire and use in a well-ventilated area. If adhesive or sealing compound contacts skin or clothing, wash immediately with soap and water.

1. Lightly coat threads of two pipe plugs (4) and two pipe plugs (1) with pipe sealing compound. Install pipe plugs in thermostat housing cover (2).
2. Lightly coat threads of plug (5) with pipe sealing compound. Install plug in thermostat housing cover (2).
3. Support thermostat housing cover (2), contact side up, level on workbench.
4. Using seal installer and handle, install new thermostat seal (6) on thermostat housing cover (2).
5. Using hammer, drive thermostat seal (6) into thermostat housing cover (2) bore until tool lip is flush against housing cover.
6. Repeat steps 4 and 5 for other new thermostat seal (6).
7. Lightly coat lips of two thermostat seals (6) with lubricating oil.
8. Install two thermostats (8) on thermostat housing cover (2), spring side up. Press thermostats into housing cover.

INSTALLATION - CONTINUED

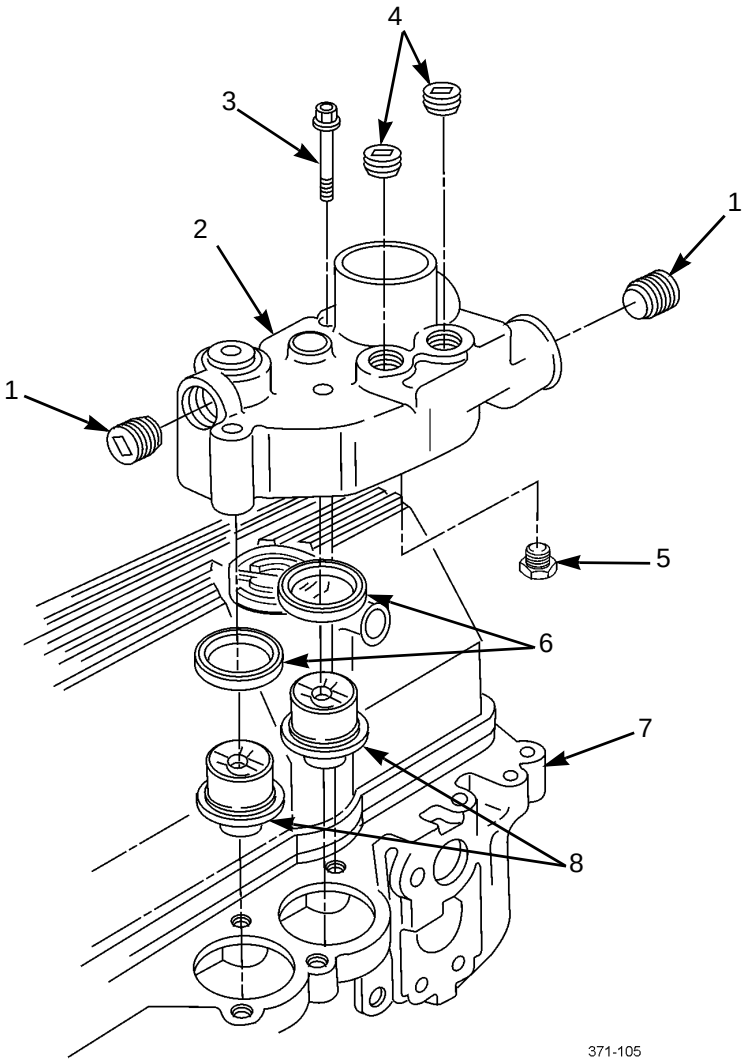

NOTE

Ensure that machined mating surfaces of thermostat housing cover and cylinder head are clean and dry.

9. Install thermostat housing cover (2) on cylinder head (7) with four bolts (3). Tighten bolts to 43-54 lb-ft (58-73 Nm).
10. Install coolant hoses, pipes, and clamps (WP 0047 00 or WP 0048 00).

END OF WORK PACKAGE

COOLANT EXPANSION TANK REPLACEMENT (M915A3 NEW MODEL, M916A3, M917A2) 0050 00

THIS WORK PACKAGE COVERS

Removal, Installation

INITIAL SETUP

Tools and Special Tools

Tool kit, general mechanic's (Item 50, WP 0306 00)

Materials/Parts

Tags, marker (Item 34, WP 0305 00)

Nut, lock (P/N 23-11020-006) (2)

Equipment Condition

Cooling system drained (WP 0046 00)

Water level probe removed (WP 0095 00)

REMOVAL

NOTE

Tag hoses to ensure correct installation.

1. Remove nut (7), screw (8), and hose clamp (9) from attachment to expansion tank (3).
2. Loosen two hose clamps (1) and remove two hoses (2) from top of expansion tank (3).
3. Loosen hose clamp (6) and remove hose (5) from underside of expansion tank (3).
4. Remove overflow hose (4) from neck of expansion tank (3).

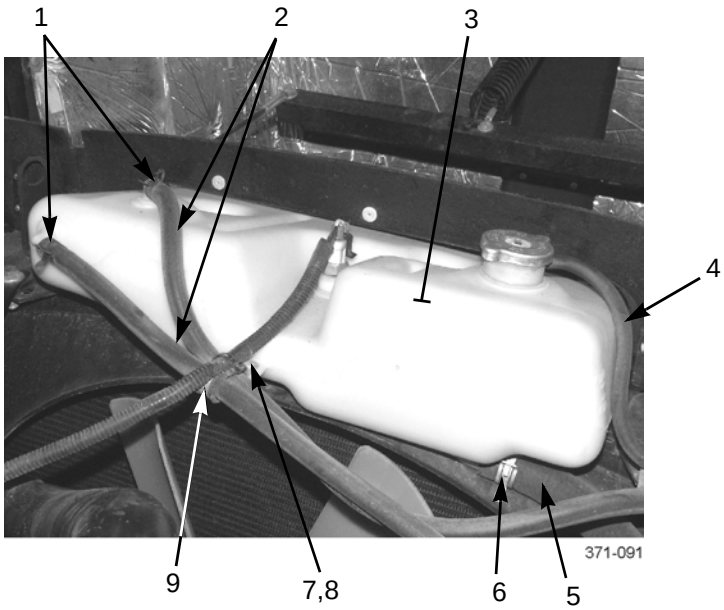

COOLANT EXPANSION TANK REPLACEMENT (M915A3 NEW MODEL, M916A3, M917A2) - CONTINUED 0050 00

REMOVAL - CONTINUED

5. Remove two locknuts (10), washers (11), expansion tank (3), two spacers (13), and rubber pad (12) from top of radiator (14). Discard locknuts.

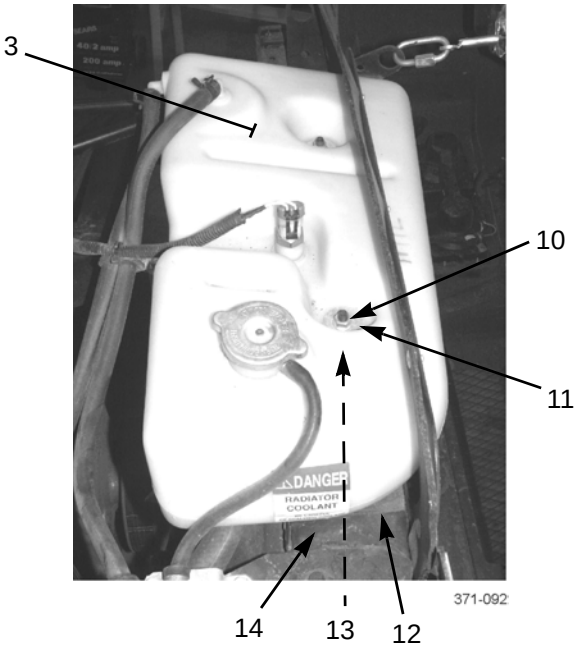

INSTALLATION

1. Position rubber pad (12), two spacers (13), and expansion tank (3) to top of radiator (14). Secure with two washers (11) and new locknuts (10).
2. Install overflow hose (4) to neck of expansion tank (3).
3. Install hose (5) to underside of expansion tank (3) with hose clamp (6).
4. Install two hoses (2) to top of expansion tank (3) with two hose clamps (1).
5. Secure hose clamp (9) to expansion tank (3) with screw (8) and nut (7).

INSTALLATION - CONTINUED

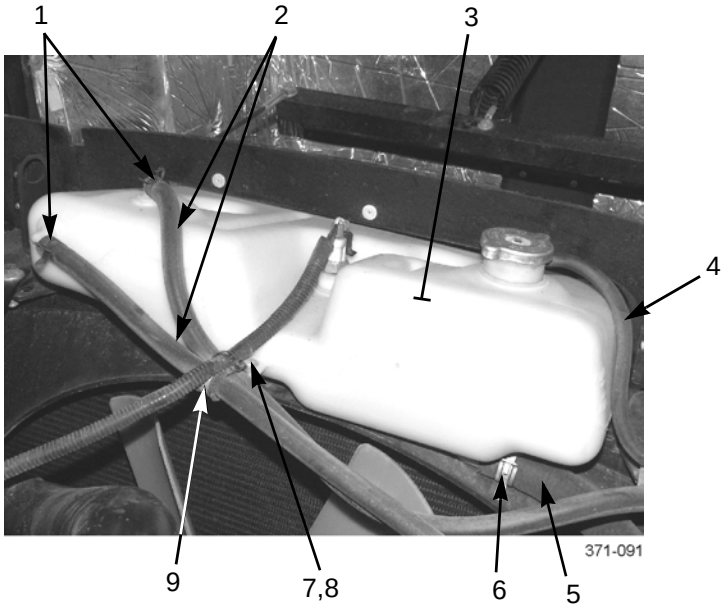

6. Install water level probe (WP 0095 00).
7. Fill cooling system (WP 0046 00).

END OF WORK PACKAGE

RADIATOR SUPPORT ROD REPLACEMENT 0051 00

THIS WORK PACKAGE COVERS

Removal, Installation

INITIAL SETUP

Tools and Special Tools

Tool kit, general mechanic's (Item 50, WP 0306 00)

Trestle, hoist, portable (Item 52, WP 0306 00)

Materials/Parts

Nut, lock (P/N M45913/1-4CG5C) (2)

Nut, lock (P/N M45913/1-8CG5C) (4)

Personnel Required

Two

Equipment Condition

Hood opened (TM 9-2320-302-10)

REMOVAL

1. With hood (1) in opened position, place trestle under center of hood. Adjust height of trestle to support weight of hood.
2. Loosen two nuts (2) and open two chain links (3).
3. Remove two cables (4) from chain links (3).

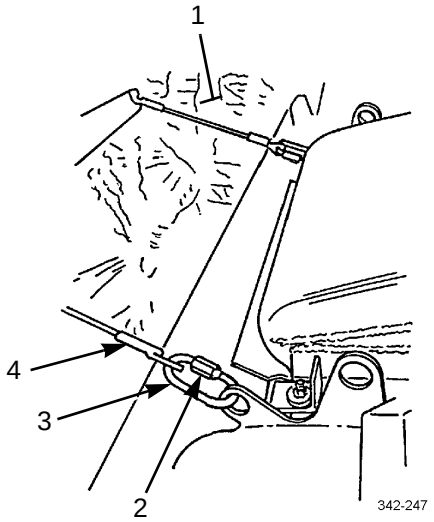

REMOVAL - CONTINUED

4. Remove two locknuts (10), four washers (6), two screws (5), and four clamps (7) from radiator support rod (9) and hose (8). Discard locknuts.

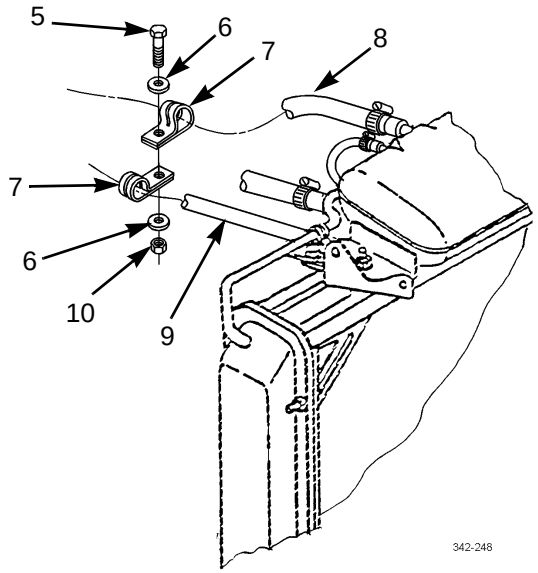

NOTE

Note position of washers and spacer to aid in installation.

5. Remove four locknuts (17), nine washers (14), four screws (13), and three radiator support rods (9, 12, and 15) from two support brackets (11) and radiator (16). Discard locknuts.

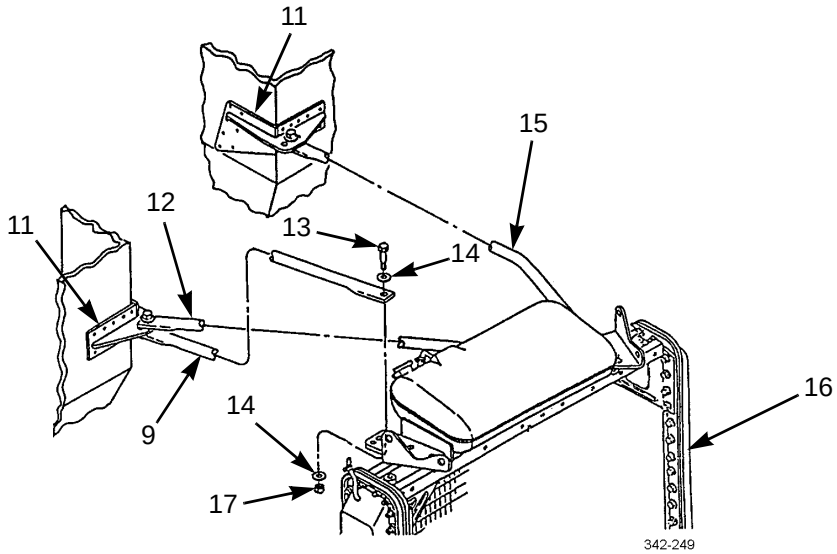

INSTALLATION

1. Install three radiator support rods (9, 12, and 15) on radiator (16) and two support brackets (11) with four screws (13), nine washers (14), and four new locknuts (17).
2. Install four clamps (7) on hose (8) and radiator support rod (9) with two screws (5), four washers (6), and two new locknuts (10).
3. Install two cables (4) on two chain links (3).
4. Tighten two nuts (2) and close chain links (3).
5. Remove trestle from under hood (1).

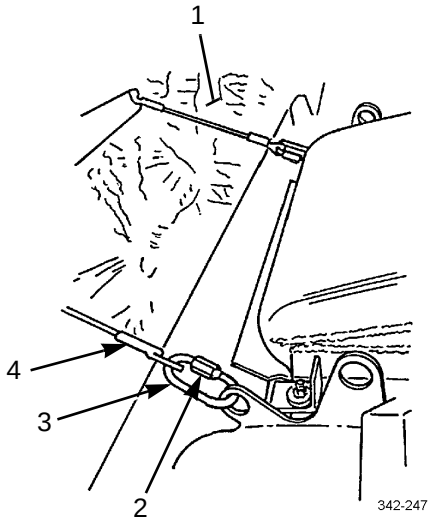

END OF WORK PACKAGE

RADIATOR REPLACEMENT 0052 00

THIS WORK PACKAGE COVERS

Removal, Installation

INITIAL SETUP

Tools and Special Tools

Tool kit, general mechanic's (Item 50, WP 0306 00)

Materials/Parts

Nut, lock (P/N M45913/1-6CG5C) (3)

Nut, lock (P/N M45913/1-10CG5C) (4)

Nut, lock (P/N M45913/1-4CG5C) (4)

Straps, tiedown (Item 33, WP 0305 00)

Personnel Required

Two

Equipment Condition

Engine hood removed (WP 0242 00)

Coolant hoses, pipes, and clamps removed (WP 0047 00 or WP 0048 00)

Water level probe removed (WP 0095 00)

Air recirculation shield removed (WP 0043 00)

Radiator support rod removed (WP 0051 00)

Coolant expansion tank removed (WP 0050 00)

REMOVAL

NOTE

Charge air cooler with condenser attached must be removed and set aside prior to removal of radiator. This must be done without disconnecting, removing or opening air conditioning condenser lines which would allow refrigerant to escape.

REMOVAL - CONTINUED

1. Remove two nuts (11), four washers (4), and two screws (5) from two side shields (8).
2. Loosen four clamps (1) and remove two hoses (6) from charge air cooler (14) and air intake tubes (7).

CAUTION

Secure charge air cooler in position before performing steps 3 and 4. Failure to follow this caution will result in damage to equipment.

3. Remove two locknuts (10), screws (12), and washers (13) from charge air cooler (14). Discard locknuts.
4. Remove two nuts (2), washers (3), and charge air cooler with condenser (14) from radiator (9).

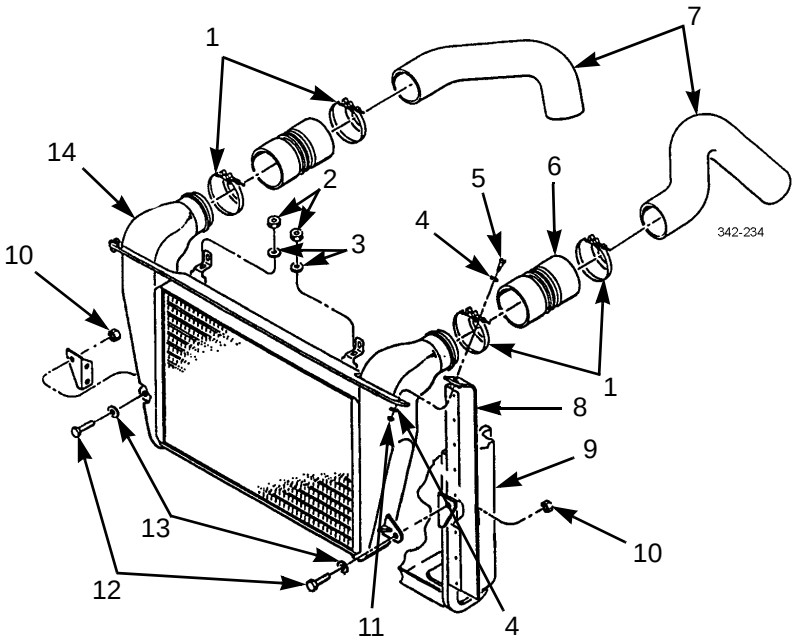

5. Remove four screws (33), washers (32), and fan shroud (31) from radiator (16).

WARNING

Use extreme caution when handling heavy parts. Provide adequate support and use assistance during procedure. Ensure that any lifting device used is in good condition and of suitable load capacity. Keep clear of heavy parts supported only by lifting device. Failure to follow this warning may result in death or injury to personnel.

6. Using suitable lifting device, support radiator (16).
7. Remove two locknuts (25), washers (24), and isolators (23) from screws (20). Discard locknuts.
8. Remove locknut (18) and ground cable (19) from radiator (16). Discard locknut.

REMOVAL - CONTINUED

NOTE

Remove tiedown straps, as necessary.

9. Lift radiator (16) from vehicle and remove two isolators (22) and washers (26). Place radiator in safe area.
10. Remove four locknuts (27) and mounting plate (28) from radiator (16). Discard locknuts.
11. Remove two screws (20), washers (21), and plate (29) from mounting plate (28).
12. Remove two locknuts (30), screws (15), washers (34), and air line support (17) from radiator (16). Discard locknuts.

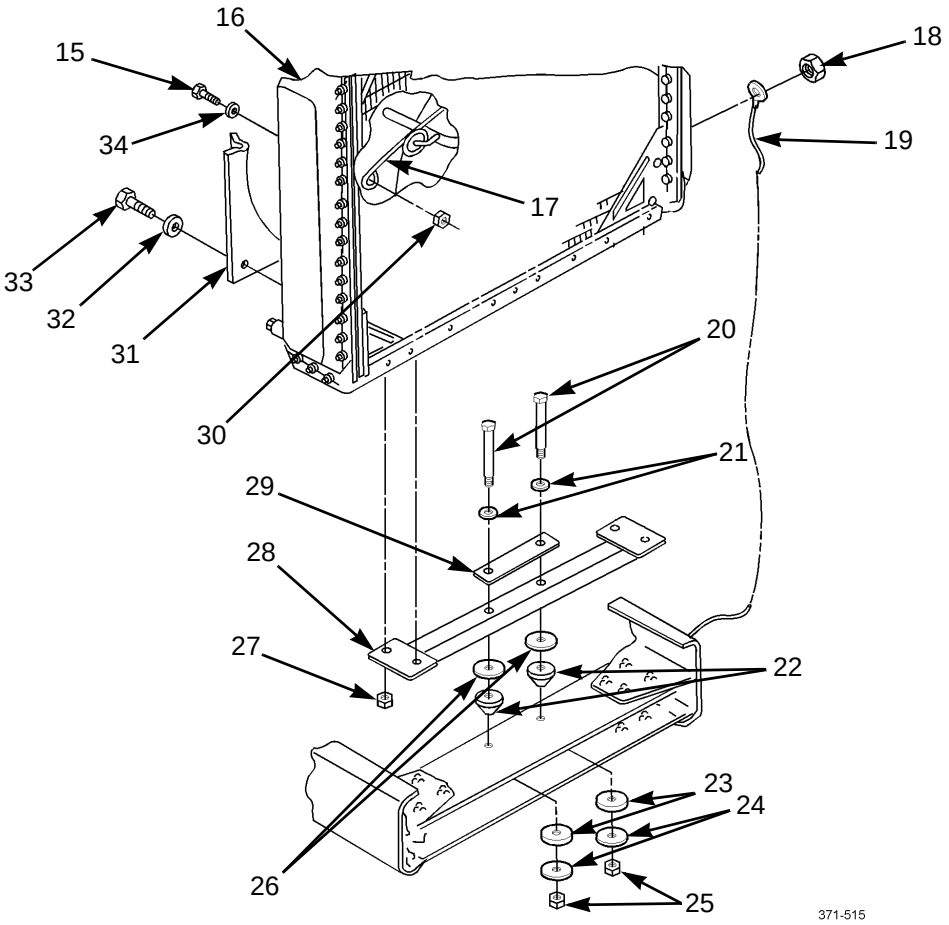

INSTALLATION

NOTE

Install new tiedown straps, as necessary.

1. Install air line support (17) on radiator (16) with two washers (34), screws (15), and new locknuts (30).
2. Loosely install plate (29) on mounting plate (28) with two washers (21) and screws (20).
3. Install mounting plate (28) on radiator (16) with four new locknuts (27).

INSTALLATION - CONTINUED

WARNING

Use extreme caution when handling heavy parts. Provide adequate support and use assistance during procedure. Ensure that any lifting device used is in good condition and of suitable load capacity. Keep clear of heavy parts supported only by lifting device. Failure to follow this warning may result in death or injury to personnel.

4. Position two isolators (22), washers (26), and radiator (16) on vehicle. Remove lifting device.

5. Install ground cable (19) on radiator (16) with new locknut (18).

6. Install two isolators (23), washers (24), and new locknuts (25) on screws (20).

7. Install fan shroud (31) on radiator (16) with four washers (32) and screws (33).

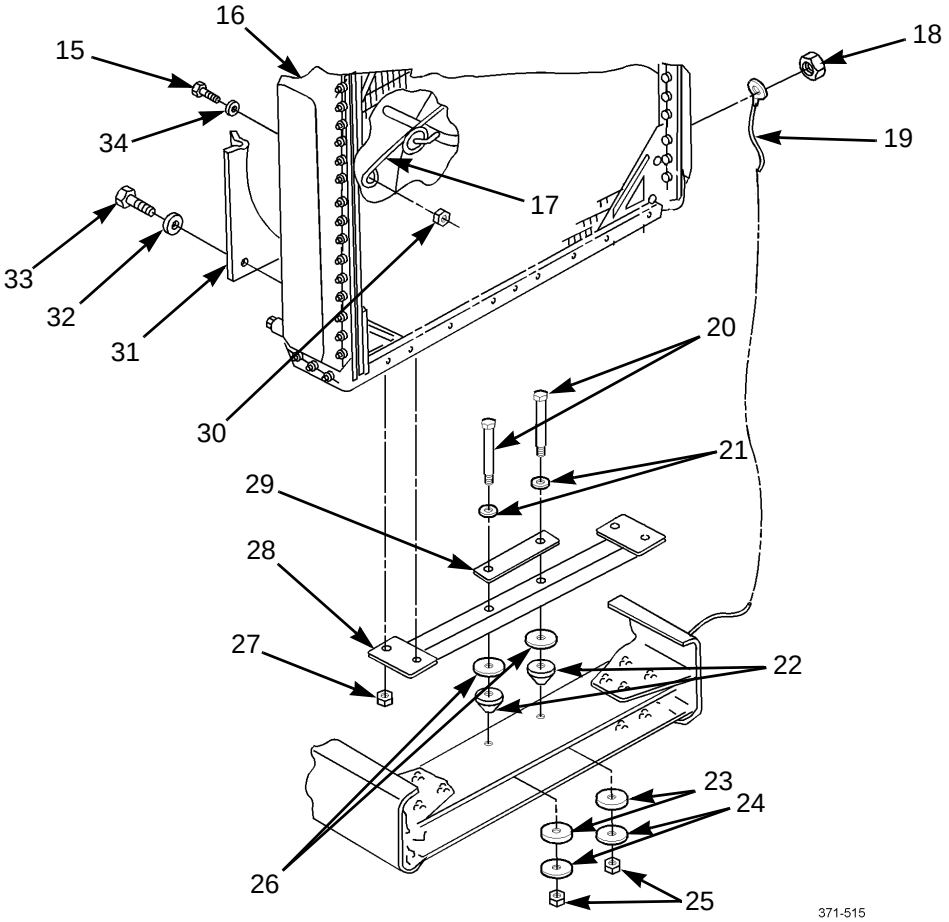

INSTALLATION - CONTINUED

8. Install charge air cooler (14) on radiator (9) with two washers (3) and nuts (2).
9. Install two screws (12), washers (13), and new locknuts (10) on charge air cooler (14).
10. Position two hoses (6) and four clamps (1) on air intake tubes (7) and charge air cooler with condenser (14). Tighten clamps.
11. Install two screws (5), four washers (4), and two locknuts (11) on side shields (8).

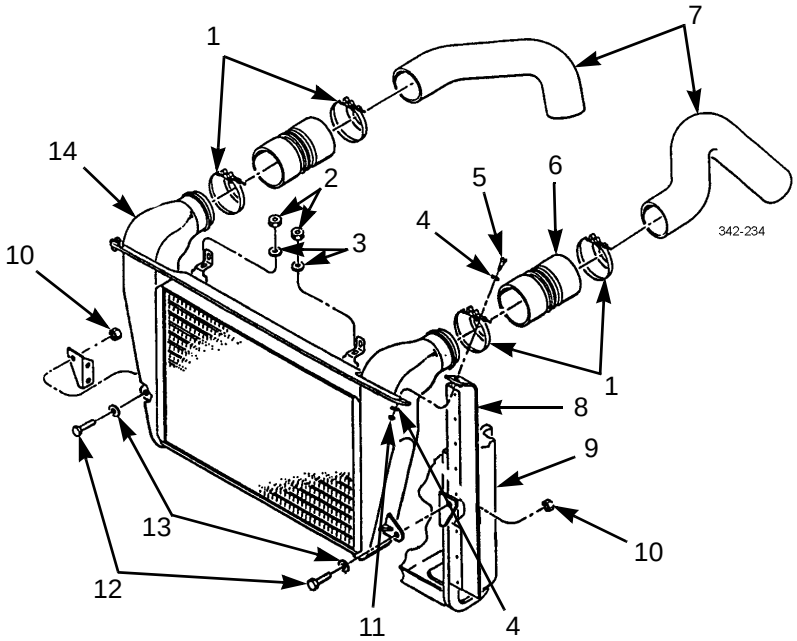

12. Install radiator support rod (WP 0051 00).
13. Install expansion tank (WP 0050 00)
14. Install water level probe (WP 0095 00).
15. Install coolant hoses, pipes and clamps (WP 0047 00 or WP 0048 00).
16. Install engine hood (WP 0242 00).

END OF WORK PACKAGE

FAN BELT REPLACEMENT AND ADJUSTMENT (M915A3 OLD MODEL) 0053 00

THIS WORK PACKAGE COVERS

Removal, Installation, Adjustment

INITIAL SETUP

Tools and Special Tools

Tool kit, general mechanic's (Item 50, WP 0306 00)

Tape, measuring (Item 45, WP 0306 00)

Wrench, torque, 50-250 lb-ft (Item 58, WP 0306 00)

Equipment Condition

Fan impeller and shroud removed (WP 0054 00)

REMOVAL

1. Loosen four screws (3) on spindle and housing (2).
2. Loosen adjusting screw (1) and allow slack in three fan belts (4).
3. Remove three fan belts (4) from vehicle.

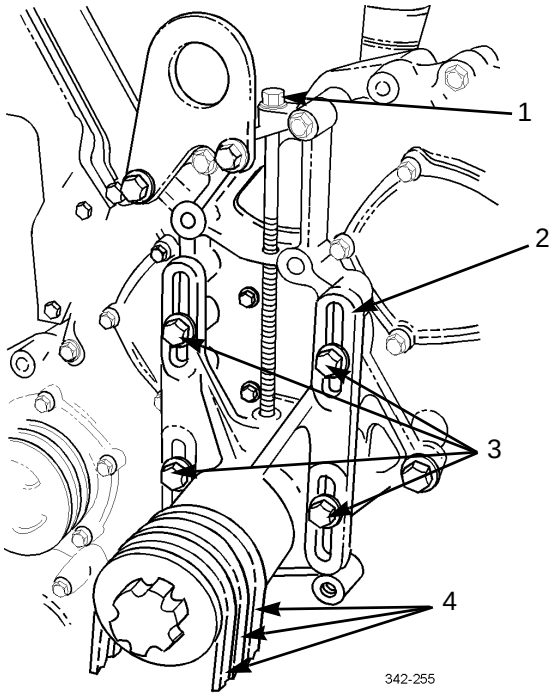

INSTALLATION

NOTE

Fan belts should only be replaced in matched sets. DO NOT mix old and new fan belts.

INSTALLATION - CONTINUED

1. Position three fan belts (4) on vehicle.
2. Install fan impeller and shroud (WP 0054 00).

ADJUSTMENT

1. Tighten adjusting screw (1) until fan belt (4) has less than 1/2 inch of free-play.
2. Tighten four screws (3) on spindle and housing (2) to 75-83 lb-ft (100-112 Nm).
3. Operate engine for about 30 minutes (or 15 miles) and check fan belt (4) tension. Adjust tension, as necessary.
4. Check fan belt (4) tension after 8 hours (or 250 miles). Adjust tension, as necessary.

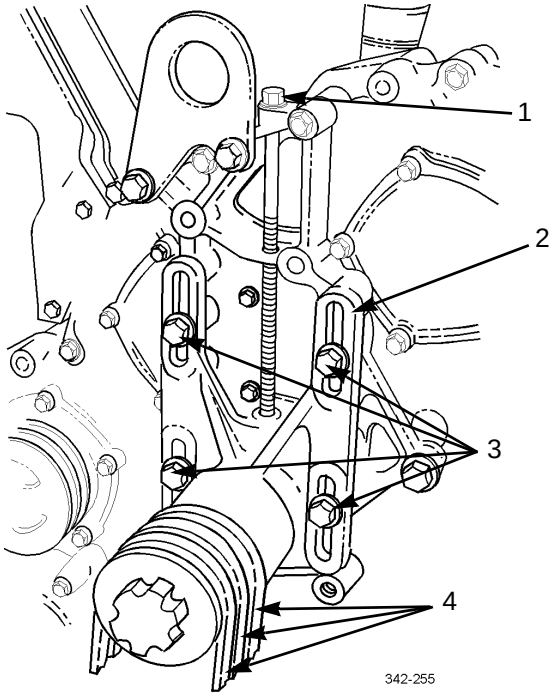

END OF WORK PACKAGE

FAN IMPELLER AND SHROUD REPLACEMENT 0054 00

THIS WORK PACKAGE COVERS

Removal, Installation

INITIAL SETUP

Tools and Special Tools

Tool kit, general mechanic's (Item 50, WP 0306 00)

Materials/Parts

Washer, lock (P/N 3057-40254) (6)

Equipment Condition

Radiator removed (WP 0052 00)

REMOVAL

1. Remove six nuts (5), lockwashers (4), and washers (3) from six studs (2). Discard lockwashers.

NOTE

Note position of fan impeller to aid in installation.

2. Remove fan impeller (1) from vehicle.

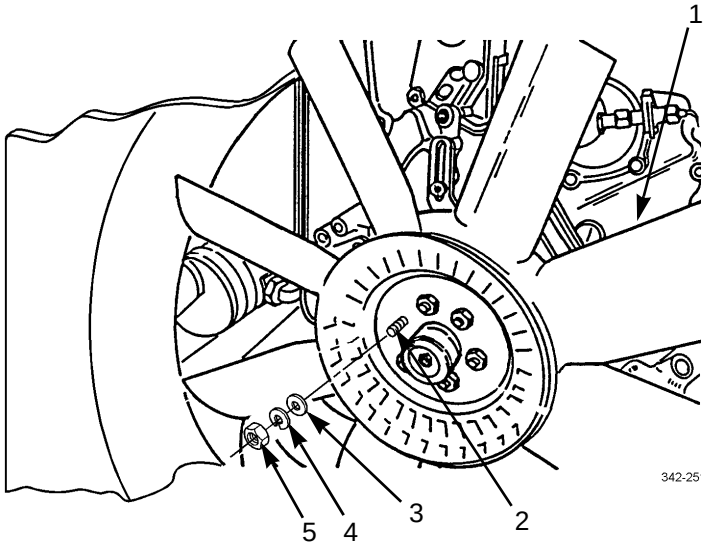

INSTALLATION

1. Position fan impeller (1) on vehicle.
2. Install fan impeller (1) on six studs (2) with six washers (3), new lockwashers (4), and nuts (5).

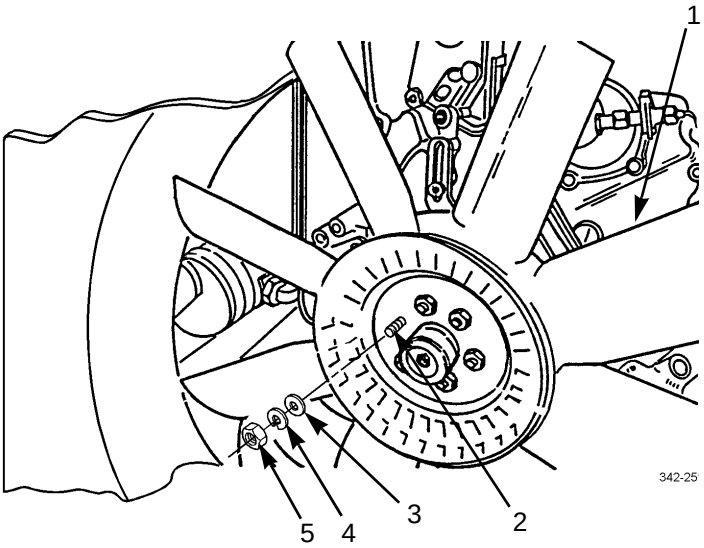

3. Install radiator (WP 0052 00).

END OF WORK PACKAGE

FAN CLUTCH SOLENOID REPLACEMENT 0055 00

THIS WORK PACKAGE COVERS

Removal, Installation

INITIAL SETUP

Tools and Special Tools

Tool kit, general mechanic's (Item 50, WP 0306 00)

Equipment Condition

Air system drained (TM 9-2320-302-10)

REMOVAL

1. Disconnect air line (9) from air filter (8).
2. Disconnect air line (10) from fan clutch solenoid (4).
3. Disconnect connector (6) of fan clutch solenoid (4) from engine wiring harness connector (5).
4. Remove nut (7), two washers (2), bolt (1), and fan clutch solenoid (4) from engine block.
5. Remove adapter (3) and air filter (8) from fan clutch solenoid (4).

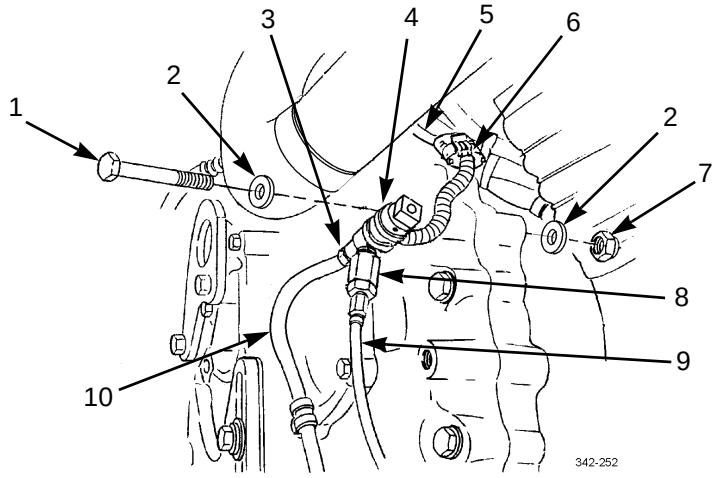

INSTALLATION

1. Install adapter (3) and air filter (8) on fan clutch solenoid (4).
2. Install fan clutch solenoid (4) on engine block with bolt (1), two washers (2), and nut (7).
3. Connect connector (6) of fan clutch solenoid (4) to engine wiring harness connector (5).
4. Connect air line (10) to fan clutch solenoid (4).
5. Connect air line (9) to air filter (8).

END OF WORK PACKAGE

FAN CLUTCH AND DRIVE PULLEY REPLACEMENT 0056 00

THIS WORK PACKAGE COVERS

Removal, Installation

INITIAL SETUP

Tools and Special Tools

Tool kit, general mechanic's (Item 50, WP 0306 00)

Equipment Condition

Fan impeller and shroud removed (WP 0054 00)

Fan belts removed (WP 0053 00 or WP 0063 00)

Air system drained (TM 9-2320-302-10)

REMOVAL

1. Disconnect air line (5) from fitting (6) of spindle (1).

WARNING

Compressed air used for cleaning or drying purposes, or for cleaning restrictions, should never exceed 30 psi (207 kPa). Wear protective clothing (goggles/shield, gloves, etc.) and use caution to avoid injury to personnel.

NOTE

Perform step 2 if six screws of fan clutch are not accessible.

2. Apply air pressure to fitting (6) of spindle (1) and rotate fan clutch (3) to access heads of six screws (4).
3. Remove six screws (4), fan clutch (3), and drive pulley (2) from spindle (1).

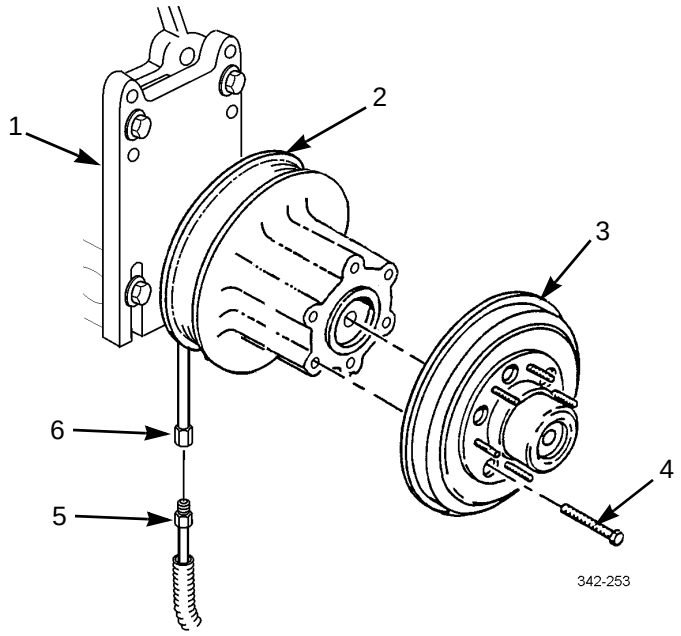

INSTALLATION

1. Install drive pulley (2), and fan clutch (3) with six screws (4).
2. Connect air line (5) to fitting (6) of spindle (1).

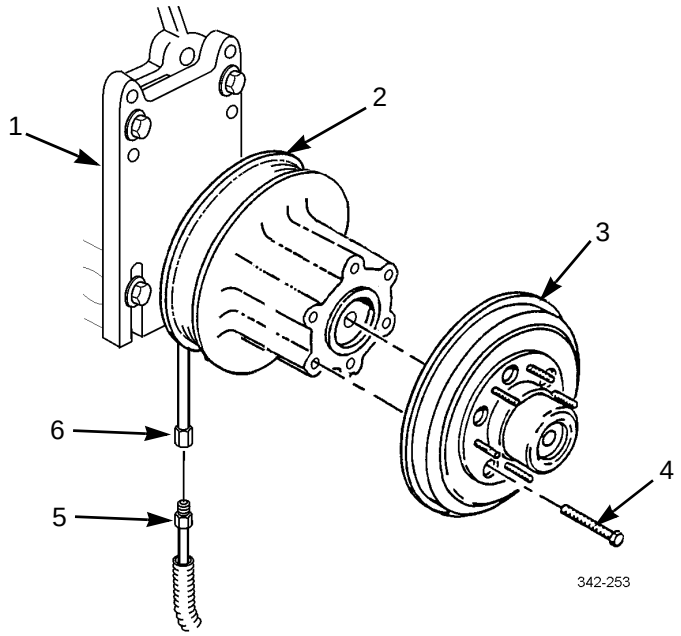

3. Install fan belts (WP 0053 00 or WP 0063 00).
4. Install fan impeller and shroud (WP 0054 00).

END OF WORK PACKAGE

WATER FILTER ELEMENT REPLACEMENT 0057 00

THIS WORK PACKAGE COVERS

Removal, Installation

INITIAL SETUP

Tools and Special Tools

Tool kit, general mechanic's (Item 50, WP 0306 00)

Pan, drain (Item 29, WP 0306 00)

Wrench, strap (Item 54, WP 0306 00)

Materials/Parts

Element, filter (P/N WF-2077) (M915A3 Old Model)

Element, filter (P/N 3318319) (M915A3 New Model, M916A3, M917A2)

Oil, lubricating (Item 22, WP 0305 00)

Rags, wiping (Item 31, WP 0305 00)

REMOVAL

NOTE

- Use a suitable container to catch any spilled liquid.
- Although slightly different in configuration, all water filter elements are replaced the same way.

1. Close two shutoff valves (1 and 2).
2. Using a strap wrench, remove water filter element (3) and gasket (4) from filter adapter (5). Discard water filter element and gasket.

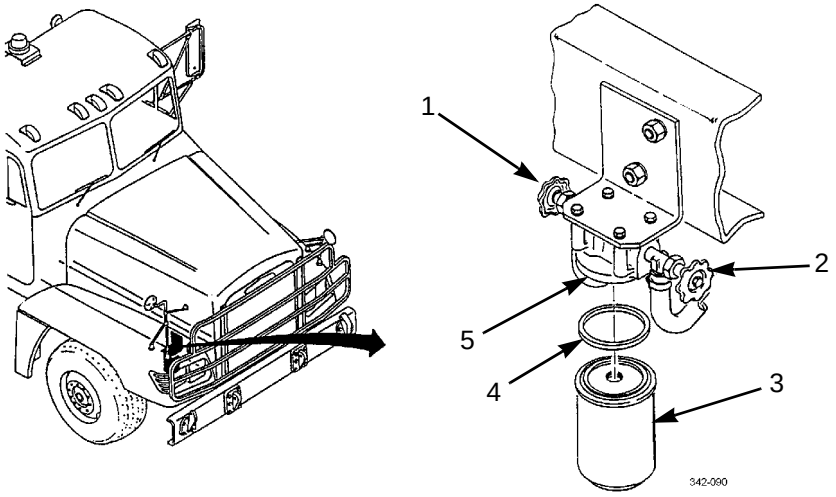

INSTALLATION

1. Position new gasket (4) on top of new water filter element (3). Lightly coat gasket with lubricating oil.
2. Install water filter element (3) and gasket (4) on adapter (5). Hand tighten until filter side movement is not present.

INSTALLATION - CONTINUED

CAUTION

DO NOT use a filter wrench to tighten water filter element. Failure to follow this caution may result in damage to water filter element.

3. Tighten water filter element (3) an additional 2/3 turn.
4. Open two shutoff valves (1 and 2).
5. Check coolant level (TM 9-2320-302-10).

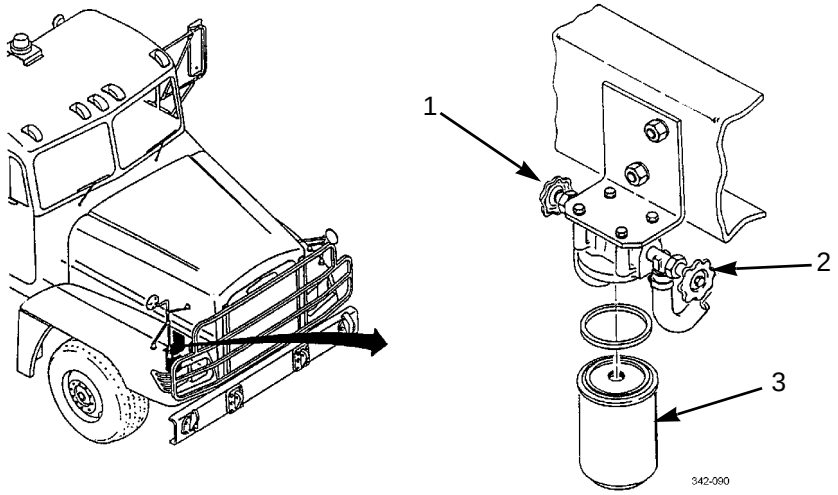

END OF WORK PACKAGE

WATER FILTER ADAPTER AND BRACKET REPLACEMENT (M915A3 OLD MODEL) 0058 00

THIS WORK PACKAGE COVERS

Removal, Installation

INITIAL SETUP

Tools and Special Tools

Tool kit, general mechanic's (Item 50, WP 0306 00)

Materials/Parts

Rags, wiping (Item 31, WP 0305 00)

Equipment Condition

Cooling system drained (WP 0046 00)

Water filter element removed (WP 0057 00)

Transmission oil cooler removed (WP 0161 00)

REMOVAL

1. Loosen hose clamp (10) and remove hose (9) from angle valve (11) on oil cooler side of filter adapter (5).
2. Loosen hose clamp (6) and remove hose (7) from angle valve (8) on water pump side of filter adapter (5).
3. Remove four screws (12) and filter adapter (5) from mounting bracket (1).
4. Remove two angle valves (8 and 11) from filter adapter (5).

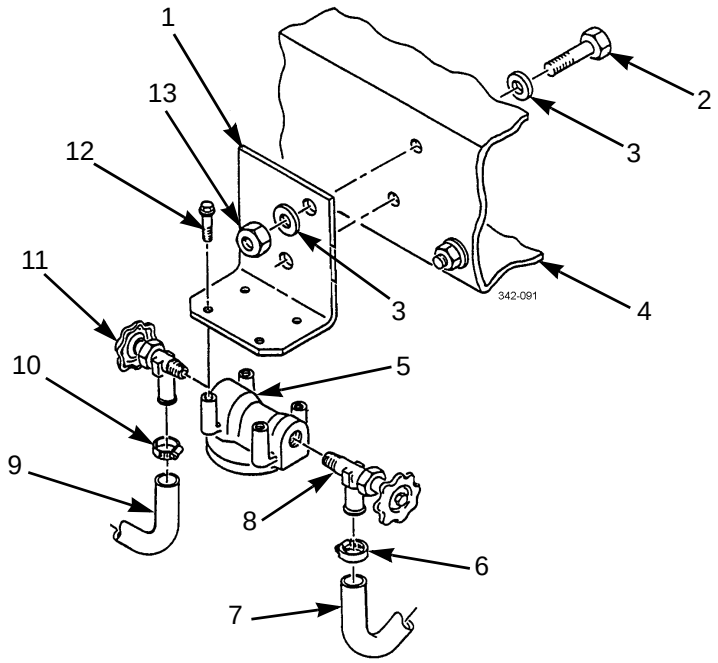

REMOVAL - CONTINUED

NOTE

Perform step 5 only if mounting bracket is damaged.

5. Remove two nuts (13), bolts (2), four washers (3), and mounting bracket (1) to frame (4).

INSTALLATION

NOTE

Perform step 1 only if mounting bracket was removed.

1. Install mounting bracket (1) on frame (4) with two bolts (2), four washers (3), and two nuts (13).
2. Install two angle valves (8 and 11) on filter adapter (5).
3. Install filter adapter (5) on mounting bracket (1) with four screws (12).
4. Install hose (7) on angle valve (8) on water pump side of filter adapter (5) with hose clamp (6).
5. Install hose (9) on angle valve (11) on oil cooler side of filter adapter (5) with hose clamp (10).

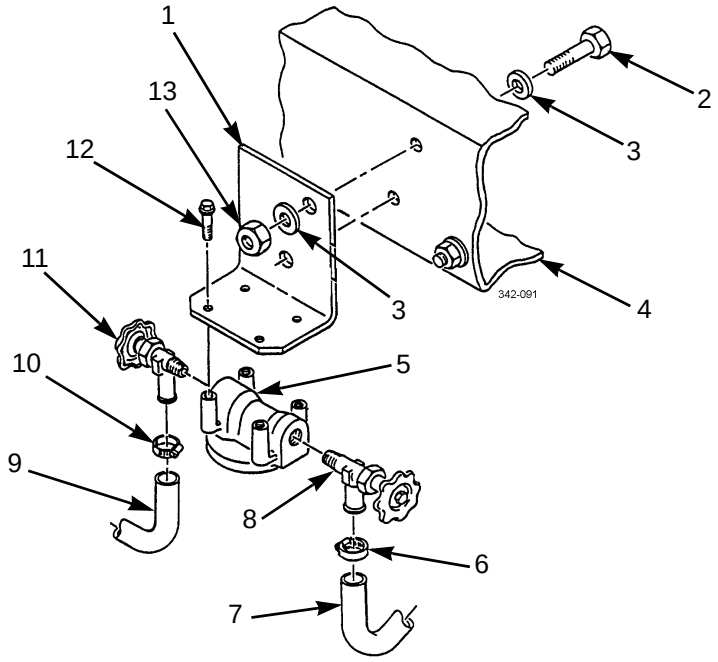

6. Install water filter element (WP 0057 00).
7. Install transmission oil cooler (WP 0161 00).
8. Fill coolant system and check for leaks (WP 0046 00).

END OF WORK PACKAGE

WATER FILTER ADAPTER AND BRACKET REPLACEMENT (M915A3 NEW MODEL, M916A3, M917A2)

0059 00

THIS WORK PACKAGE COVERS

Removal, Installation

INITIAL SETUP

Tools and Special Tools

Tool kit, general mechanic's (Item 50, WP 0306 00)

Materials/Parts

Rags, wiping (Item 31, WP 0305 00)

Equipment Conditions

Cooling system drained (WP 0046 00)

Water filter element removed (WP 0057 00)

REMOVAL

1. Loosen hose clamp (13) and remove hose (12) from shutoff valve (11).
2. Remove four bolts (7), eight washers (8), four nuts (9), two clamps (10), and bracket (6) with filter adapter (3) attached from frame (4).
3. Remove four bolts (1), four washers (2), and filter adapter (3) from bracket (6).
4. Remove adapter (5) with shutoff valve (11) attached from filter adapter (3).
5. Remove shutoff valve (11) from adapter (5).

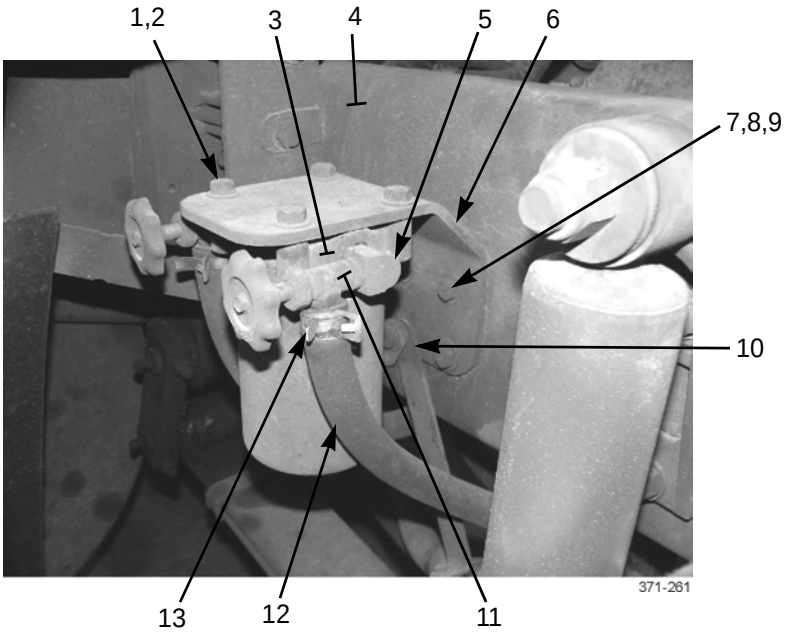

INSTALLATION

1. Install shutoff valve (11) on adapter (5).
2. Install adapter (5) on filter adapter (3).
3. Install filter adapter (3) on bracket (6).
4. Position bracket (6) and two clamps (10) on frame (4).
5. Install four bolts (7) eight washers (8), and four nuts (9).
6. Position hose clamp (13) on hose (12).
7. Install hose (12) on shutoff valve (11).

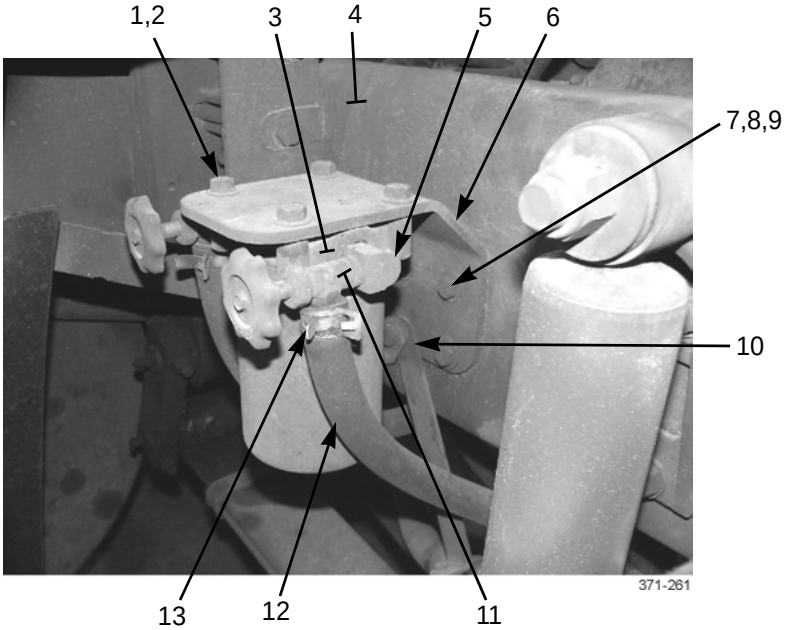

8. Install water filter element (WP 0057 00).
9. Fill coolant system and check for leaks (WP 0046 00).

END OF WORK PACKAGE

WATER PUMP REPLACEMENT 0060 00

THIS WORK PACKAGE COVERS

Removal, Installation

INITIAL SETUP

Tools and Special tools

Tool kit, general mechanic's (Item 50, WP 0306 00)

Goggles, industrial (Item 14, WP 0306 00)

Pliers, retaining ring (Item 34, WP 0306 00)

Wrench, torque, 15-75 lb-ft (Item 57, WP 0306 00)

Materials/Parts

Gasket (P/N 23526038)

Oil, lubricating (Item 22, WP 0305 00)

Equipment Condition

Cooling system drained (WP 0046 00)

Engine oil level dipstick tube removed (WP 0025 00)

Coolant overflow reservoir-to-water pump tube removed (WP 0047 00 or WP 0048 00)

Water pump-to-thermostat housing hose removed (WP 0047 00 or WP 0048 00)

Water pump-to-transmission oil cooler elbow removed (WP 0047 00 or WP 0048 00)

Radiator-to-water pump elbow removed (WP 0047 00 or WP 0048 00)

REMOVAL

1. Loosen spring clamp (8) and disconnect heater hose (9) from elbow (10) of water pump (3).
2. Remove elbow (10) and adapter (7) from water pump (3).
3. Remove drain plug (6) from bottom of water pump (3).
4. Remove two long bolts (1) and one short bolt (2) securing water pump (2) to gear case (5) of engine.
5. Pull water pump (3) straight out from gear case (5) and remove water pump from underside of vehicle.
6. Remove gasket (4). Discard gasket.

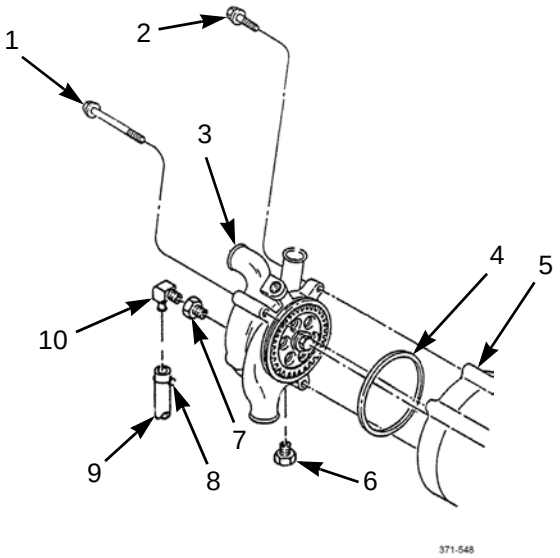

REMOVAL - CONTINUED

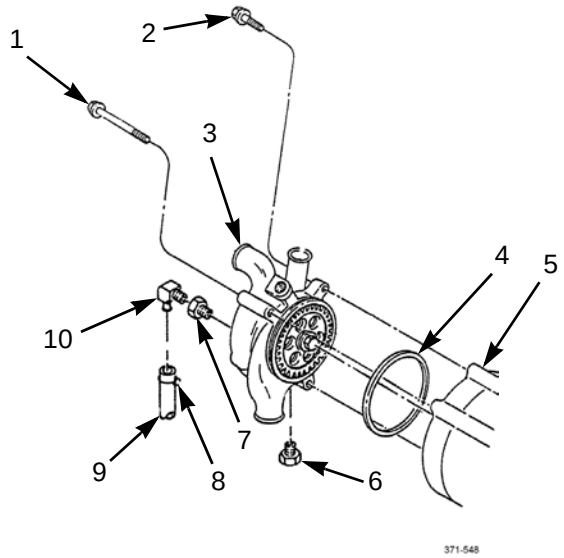

INSTALLATION

1. Apply a light coat of clean lubricating oil to new gasket (4) and install gasket into groove of water pump (3).
2. From underneath vehicle, position water pump (3) to gear case (5) of engine. Ensure gears are properly meshed.
3. Install two long bolts (1) and one short bolt (2). Tighten bolts to 43-54 lb-ft (58-73 Nm).
4. Install drain plug (6) to bottom of water pump (3).
5. Install adapter (7) and elbow (10) to water pump (3).
6. Connect heater hose (9) to elbow (10) with spring clamp (8).
7. Install radiator-to-water pump elbow (WP 0047 00 or WP 0048 00).
8. Install water pump-to-transmission oil cooler elbow (WP 0047 00 or WP 0048 00).
9. Install water pump-to-thermostat housing hose (WP 0047 00 or WP 0048 00).
10. Install coolant overflow reservoir-to-water pump tube (WP 0047 00 or WP 0048 00).
11. Install engine oil level dipstick tube (WP 0025 00).
12. Fill cooling system (WP 0046 00).

END OF WORK PACKAGE

SPINDLE AND HOUSING REPLACEMENT 0061 00

THIS WORK PACKAGE COVERS

Removal, Installation

INITIAL SETUP

Tools and Special Tools

Tool kit, general mechanic's (Item 50, WP 0306 00)

Equipment Condition

Air system drained (TM 9-2320-302-10)

Fan clutch and drive pulley removed (WP 0056 00)

REMOVAL

NOTE

Although slightly different in configuration, all spindle and housings are replaced the same.

1. Remove air hose connector (6) from coupling (5).
2. For M915A3 Old Model, remove adjuster bolt (1) from fan mounting support (2) and spindle housing (3).
3. Remove four bolts (7), washers (8), and spindle housing (3) from fan mounting support (2).
4. Remove coupling (5) and pipe nipple (4) from spindle housing (3).

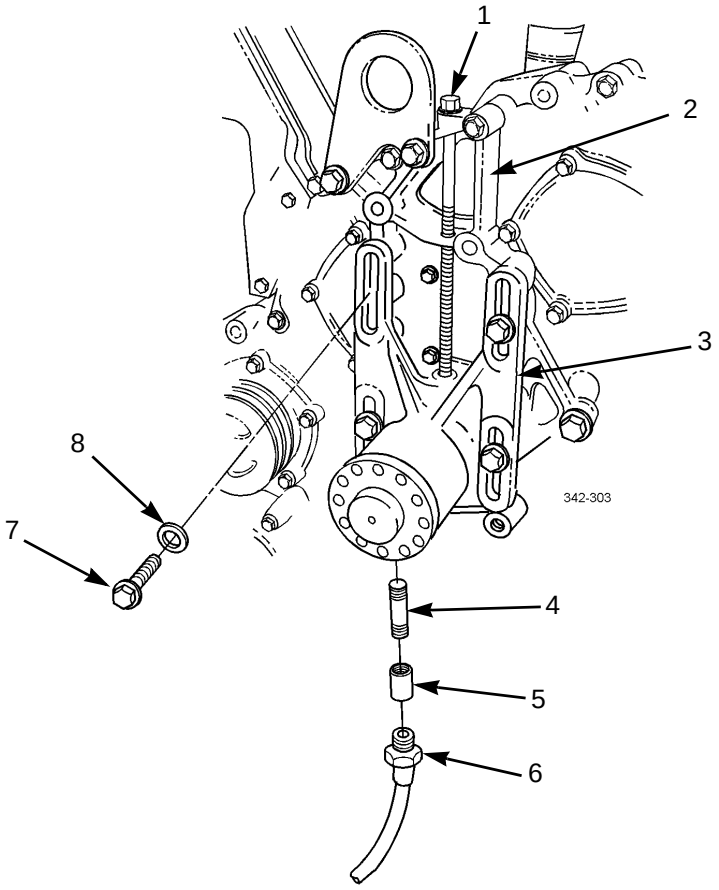

INSTALLATION

1. Install pipe nipple (4) and coupling (5) on spindle housing (3).

NOTE

DO NOT fully tighten bolts.

2. Install spindle housing (3) on fan mounting support (2) with four washers (8) and bolts (7).
3. For M915A3 Old Model, loosely install adjuster bolt (1) on fan mounting support (2) and spindle housing (3).
4. Install air hose connector (6) on coupling (5).

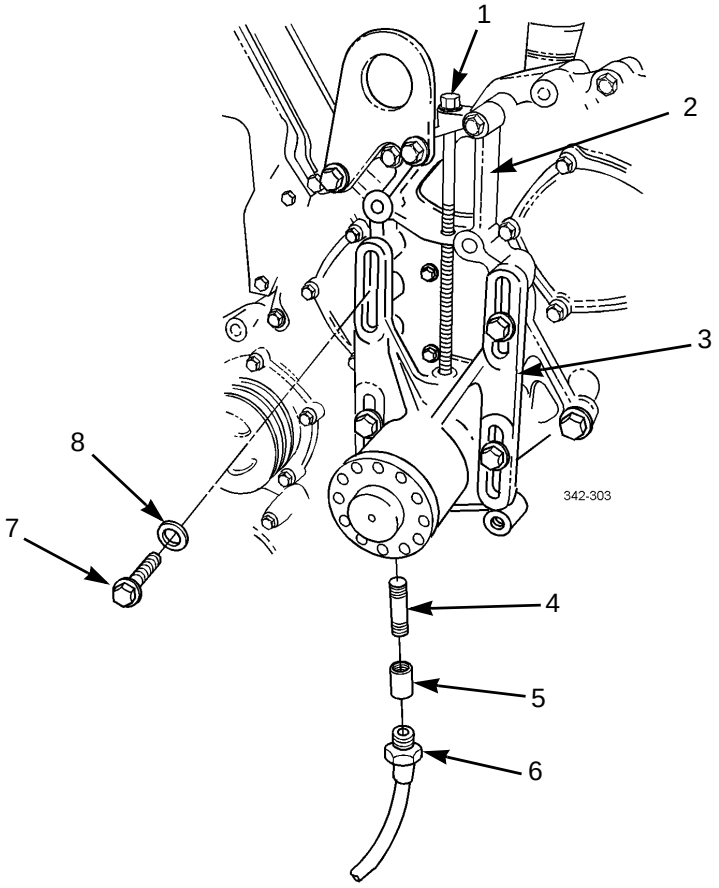

5. Install fan clutch and drive pulley (WP 0056 00).

END OF WORK PACKAGE

ALTERNATOR BELT REPLACEMENT AND ADJUSTMENT (M915A3 OLD MODEL) 0062 00

THIS WORK PACKAGE COVERS

Removal, Installation, and Adjustment

INITIAL SETUP

Tools and Special Tools

Tool kit, general mechanic's (Item 50, WP 0306 00)

Tape, measuring (Item 45, WP 0306 00)

Wrench, torque, 15-75 lb-ft (Item 57, WP 0306 00)

References

TM 9-2320-302-10

REMOVAL

1. Hold self-locking nut (6) and loosen hex cap screw (5).
2. Loosen two cap screws (1 and 9) securing adjusting rod link (10) and rod (12) to engine.
3. Loosen hex nut (11) and tighten hex nut (8) to loosen tension on drive belt (3).

NOTE

After loosening tension drive belt remains tight or is difficult to remove from pulleys, proceed to step 5.

4. Remove drive belt (3) from alternator pulley (7), air conditioning compressor pulley (2), and accessory drive pulley (4).
5. Remove cap screw (9) and rotate alternator until drive belt (3) can be removed.

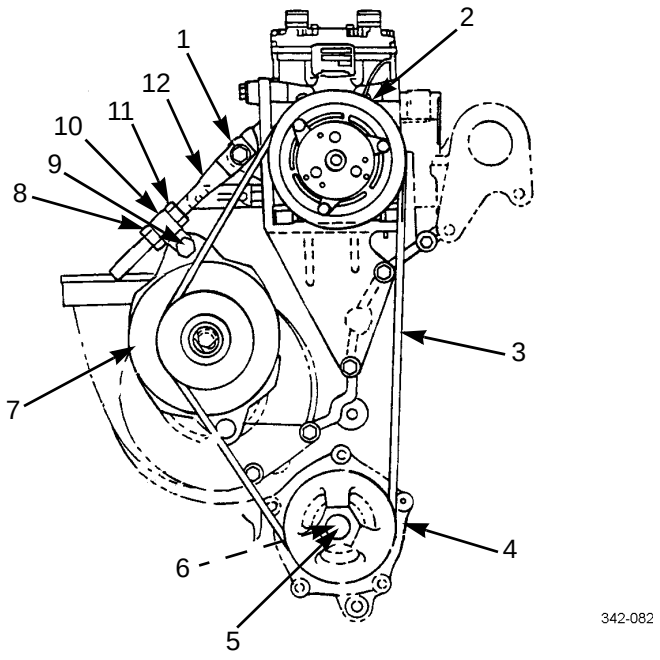

ALTERNATOR BELT REPLACEMENT AND ADJUSTMENT (M915A3 OLD MODEL) - CONTINUED 0062 00

INSTALLATION

1. Position drive belt (3) on alternator pulley (7), air conditioning compressor pulley (2), and accessory drive pulley (4).
2. Install cap screw (9) if removed. If not, proceed to step 3.
3. Tighten drive belt tension by loosening hex nut (8) and tightening hex nut (11) on adjusting rod (12) and link (10) until drive belt is tight. Tighten hex nut (8).
4. Tighten three cap screws (1, 5, and 9) to 60-70 ft-lb (81-95 Nm).

ADJUSTMENT

1. Back off hex nut (8) and tighten hex nut (11) until belt free-play is less than 1/2 inch.
2. Start engine (TM 9-2320-302-10) and operate engine for 30 minutes (or 15 miles).
3. Check belt tension and adjust as required. Recheck belt tension again after 8 hours of operation and adjust as required.

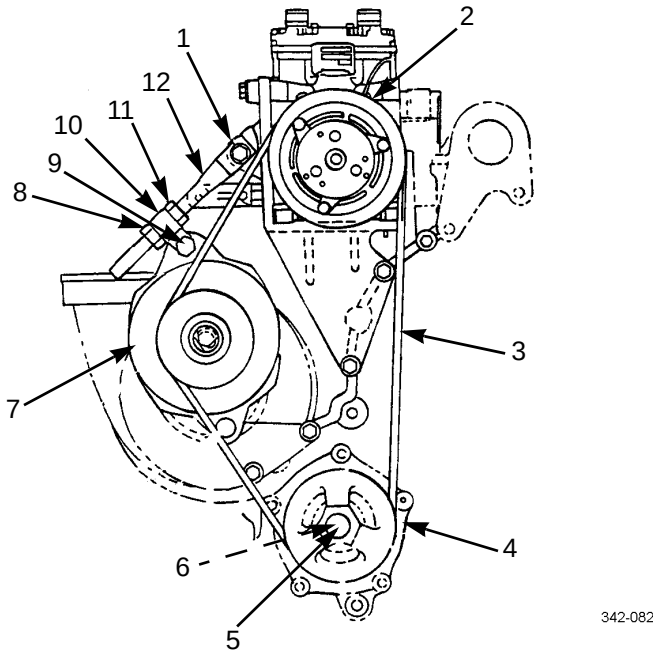

END OF WORK PACKAGE

ALTERNATOR AND FAN BELT REPLACEMENT (M915A3 NEW MODEL, M916A3, M917A2) 0063 00

THIS WORK PACKAGE COVERS

Alternator Belt: Removal, Installation; Fan Belt: Removal, Installation

INITIAL SETUP

Tools and Special Tools

Tool kit, general mechanic's (Item 50, WP 0306 00)

Equipment Condition

Engine cool

Hood opened (TM 9-2320-302-10)

ALTERNATOR BELT REMOVAL

NOTE

Note routing of belt for installation.

1. Using ½ in drive handle with no socket, insert square shaft of drive handle into square hole (5) of belt tensioner (3) at front of engine.
2. While rotating belt tensioner (3) clockwise to relieve tension in belt (1), remove belt from alternator pulley (7).
3. Gradually allow belt tensioner (3) to rotate to free position and remove drive handle.
4. Remove belt (1) from around air conditioning pump pulley (2), belt tensioner roller (6), and water pump pulley (4).

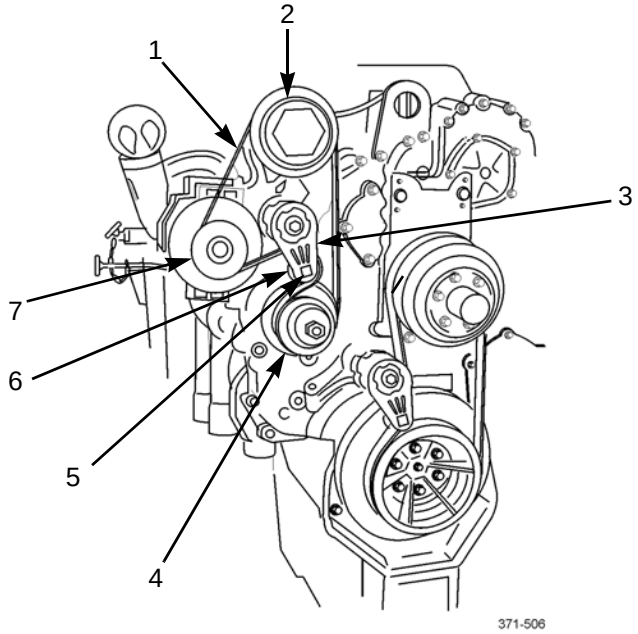

ALTERNATOR BELT INSTALLATION

1. Position belt (1) loosely around water pump pulley (4), belt tensioner roller (6), and air conditioning pump pulley (2).
2. Insert square shaft of ½ in drive handle into square hole (5) of belt tensioner (3).
3. While rotating belt tensioner (3) clockwise, position belt (1) to alternator pulley (7).
4. Gradually allow belt tensioner roller (6) to contact belt (1). Remove drive handle from belt tensioner (3).

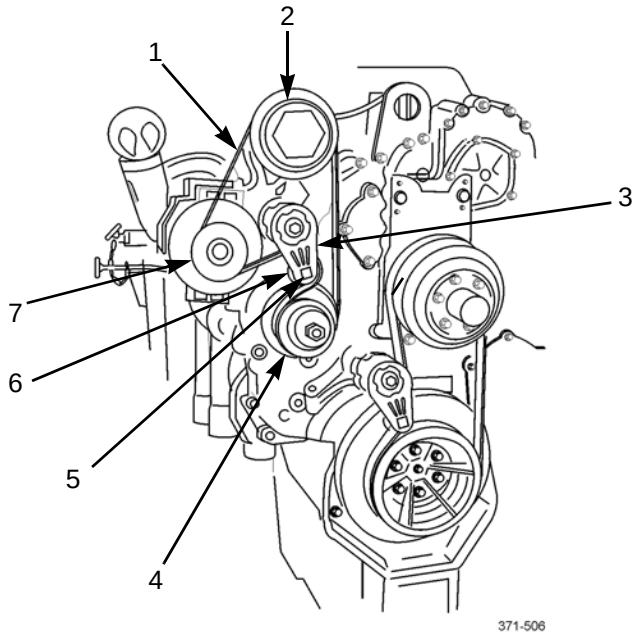

5. Close hood (TM 9-2320-302-10).

FAN BELT REMOVAL

1. Using ½ in drive handle with no socket, insert square shaft of drive handle into square hole (11) in belt tensioner (13) at front of engine.
2. While rotating belt tensioner (13) clockwise, remove belt (9) from fan pulley (8).
3. Gradually allow belt tensioner (13) to return to free position.
4. Remove belt (9) from around vibration dampener (10), fan pulley (8), and fan.

FAN BELT REMOVAL - CONTINUED

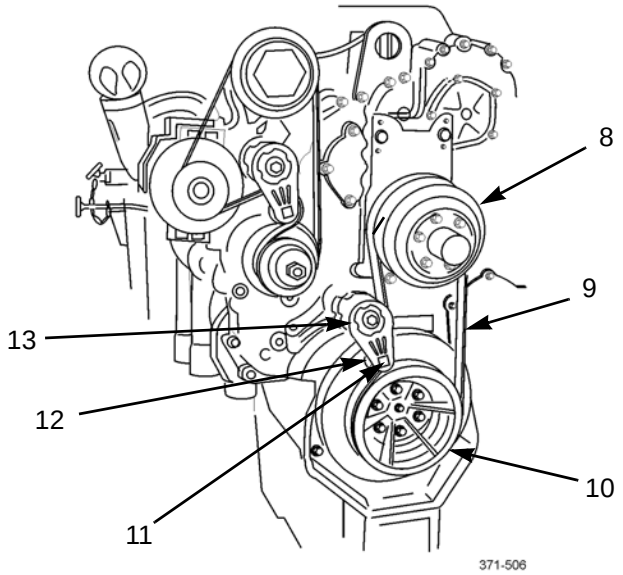

FAN BELT INSTALLATION

1. Position belt (9) loosely over fan and around lower half of vibration dampener (10).
2. Using ½ in drive handle with no socket, insert square shaft of drive handle into square hole (11) in belt tensioner (13).
3. While rotating belt tensioner (13) clockwise, position belt (9) to fan pulley (8).
4. Gradually allow belt tensioner roller (12) to contact belt (9). Remove drive handle from belt tensioner (13).
5. Close hood (TM 9-2320-302-10).

END OF WORK PACKAGE

ALTERNATOR AND FAN BELT TENSIONER REPLACEMENT (M915A3 NEW MODEL, M916A3, M917A2) 0064 00

THIS WORK PACKAGE COVERS

Alternator Belt Tensioner: Removal, Installation; Fan Belt Tensioner: Removal, Installation

INITIAL SETUP

Tools and Special Tools

Tool kit, general mechanic's (Item 50, WP 0306 00)

Wrench, torque, 15-75 lb-ft capacity (Item 57, WP 0306 00)

References

WP 0063 00

Equipment Condition

Engine cool

Hood opened (TM 9-2320-302-10)

ALTERNATOR BELT TENSIONER REMOVAL

1. Remove alternator belt (WP 0063 00).
2. Remove bolt (4), washer (3), and alternator belt tensioner (2) from alternator bracket (1) at front of engine.

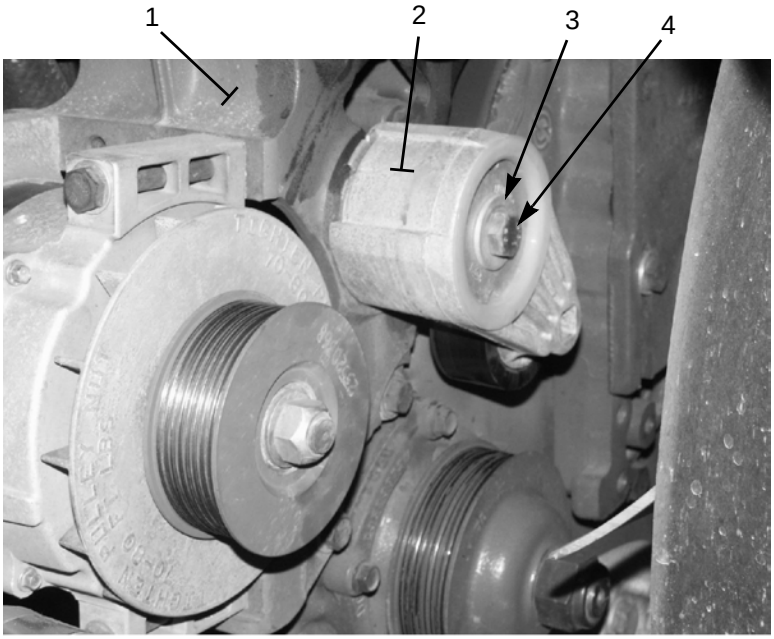

371-186

ALTERNATOR BELT TENSIONER INSTALLATION

1. Install alternator belt tensioner (2) to alternator bracket (1) with washer (3) and bolt (4).
2. Install alternator belt (WP 0063 00).

FAN BELT TENSIONER REMOVAL

1. Remove fan belt (WP 0063 00).
2. Remove bolt (9), washer (10), and fan belt tensioner (8) from tensioner bracket (5).
3. Remove two screws (11) and washers (12) from tensioner bracket (5).
4. Remove bolt (6), washer (7), and tensioner bracket (5) from front of engine.

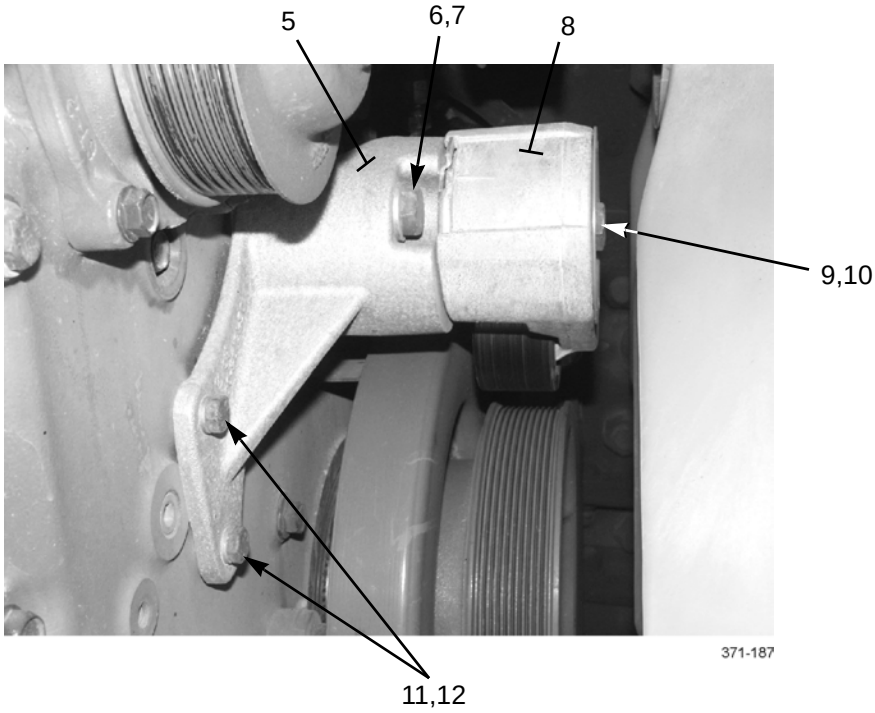

FAN BELT TENSIONER INSTALLATION

1. Install tensioner bracket (5) to front of engine with washer (7) and bolt (6). Do not fully tighten bolt.
2. Install two washers (12) and screws (11) to front of tensioner bracket (5). Tighten screws to 21 lb-ft (28 Nm).
3. Tighten bolt (6) to 75 lb-ft (102 Nm).
4. Install fan belt tensioner (8) to tensioner bracket (5) with washer (10) and bolt (9). Tighten bolt to 75 lb-ft (28 Nm).
5. Install fan belt (WP 0063 00).

END OF WORK PACKAGE

ALTERNATOR REPLACEMENT (M915A3 OLD MODEL) 0065 00

THIS WORK PACKAGE COVERS

Removal, Installation

INITIAL SETUP

Tools and Special Tools

Tool kit, general mechanic's (Item 50, WP 0306 00)

Materials/Parts

Nut, lock (P/N M45913/1-8CG5C)

Washer, lock (Din 127-B10.1-4310)

Tags, marker (Item 34, WP 0305 00)

Equipment Condition

Alternator belt removed (WP 0062 00)

Master battery switch OFF (TM 9-2320-302-10)

NOTE

Tag all electrical leads to aid in installation.

REMOVAL

1. Remove two nuts (1) and electrical leads (2) from alternator (3).
2. Remove two nuts (6), two washers (5), and two electrical leads (4) from alternator (3).

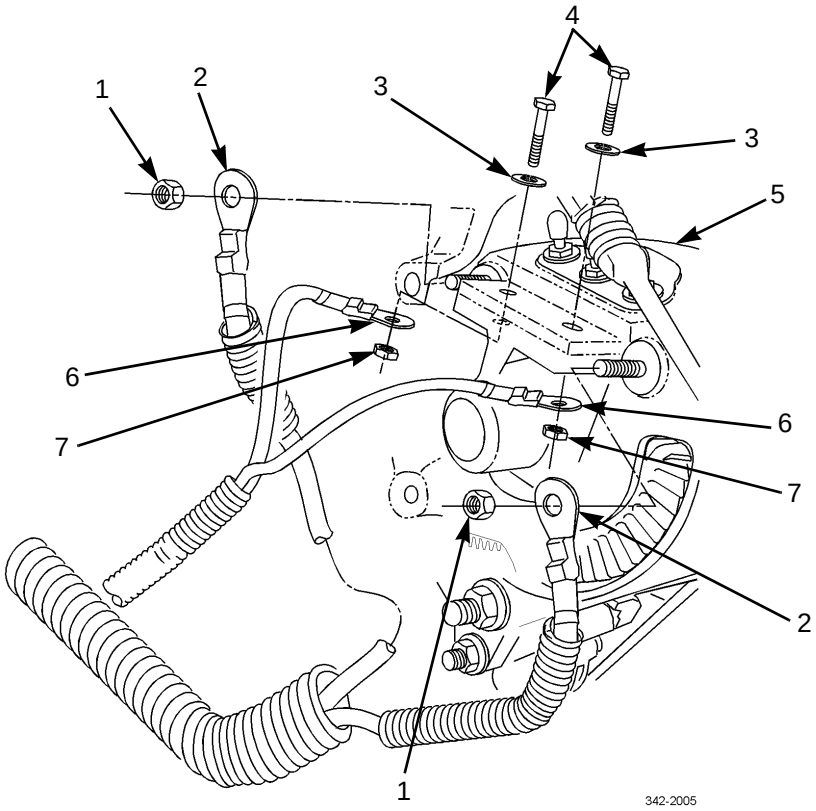

REMOVAL - CONTINUED

3. Remove cap screw (14), bearing washer (13), and adjusting rod link (8) from alternator (3).

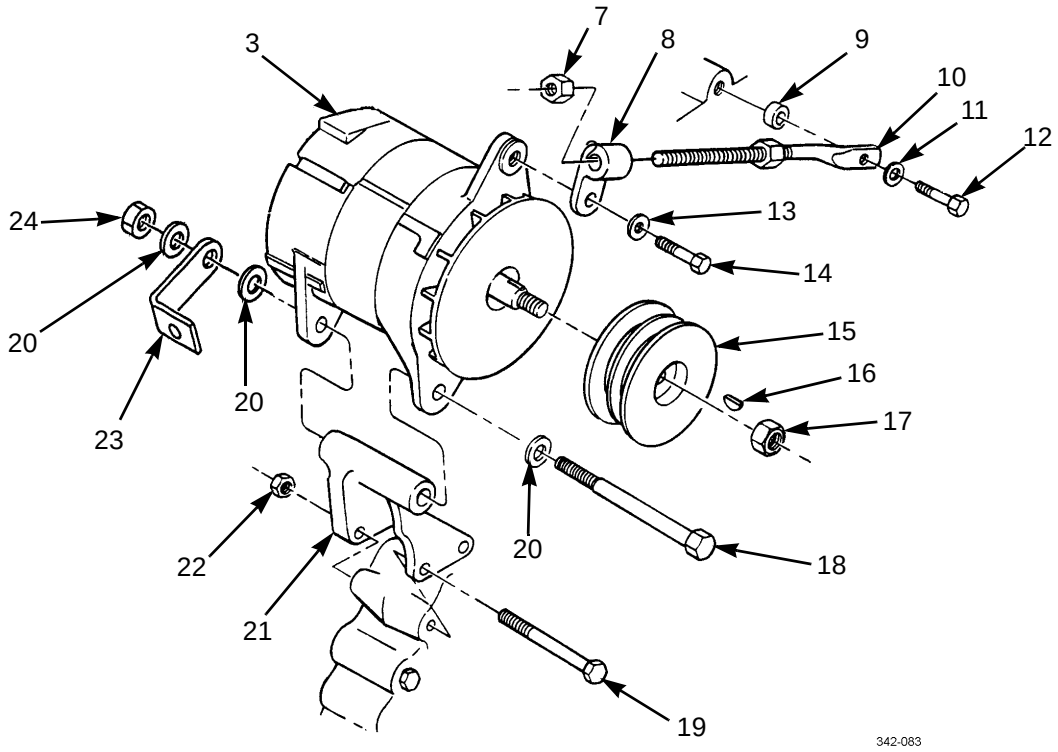

4. Support alternator (3) and remove locknut (24), cap screw (18), three bearing washers (20), alternator, and angle bracket (23) from lower mount (21). Discard locknut.
5. Hold alternator pulley (15) in vise and remove hex nut (17), key (16), and pulley from alternator (3). Retain pulley for use on new alternator.
6. Inspect lower mounting bracket (21) for damage. If damaged, remove two bolts (19), nuts (22) and lower mounting bracket.
7. Inspect adjusting rod (10) for damage. If damaged, remove cap screw (12), lockwasher (11), spacer (9), and adjusting rod. Discard lockwasher.
8. Remove two hex nuts (7) and adjusting rod link (8) from adjusting rod (10).

INSTALLATION

1. Install pulley (15) and key (16) on alternator (3) with hex nut (17).
2. If removed, install lower mounting bracket (21) with two bolts (19) and nuts (22).
3. If removed, install adjusting rod (10), with two hex nuts (7) and adjusting rod link (8), with new lockwasher (11), spacer (9), and cap screw (12).
4. Support alternator (3) and secure to lower mounting bracket (21) with cap screw (18), three bearing washers (20), angle bracket (23), and new locknut (24). Do not tighten at this time.
5. Install alternator (3) on adjusting rod link (8) with bearing washer (13) and cap screw (14).

INSTALLATION - CONTINUED.

6. Install two electrical leads (4) on alternator (3) with two washers (5), and nuts (6).
7. Install electrical leads (2) on alternator (3) with two nuts (1).

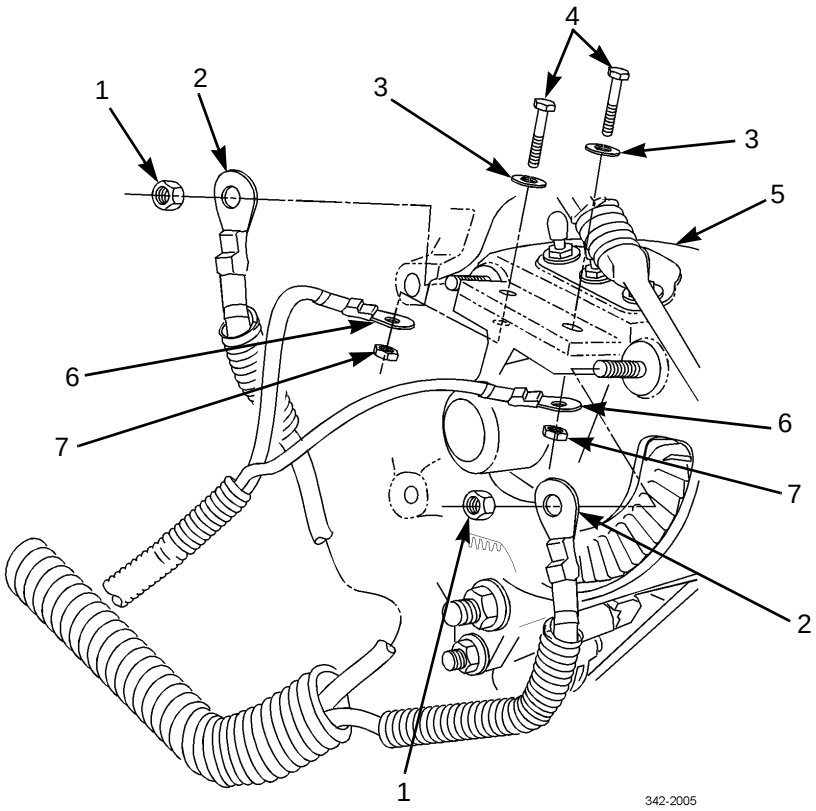

8. Install and adjust alternator belt (WP 0062 00).

END OF WORK PACKAGE

ALTERNATOR REPLACEMENT (M915A3 NEW MODEL, M916A3, M917A2) 0066 00

THIS WORK PACKAGE COVERS

Removal, Installation

INITIAL SETUP

Tools and Special Tools

Tool kit, general mechanic's (Item 50, WP 0306 00)

Vise, machinist's (Item 53, WP 0306 00)

Materials/Parts

Tags, marker (Item 34, WP 0305 00)

Equipment Condition

Alternator serpentine belt removed (WP 0063 00)

Master battery switch in OFF position (TM 9-2320-302-10)

Engine air intake tube and hoses removed at right side of engine (WP 0042 00)

REMOVAL

NOTE

Tag electrical cables to ensure correct installation.

1. Remove nut (1), lockwasher (2), and terminal of NEGATIVE cable (3) from rear of alternator (4).
2. Remove nut (6), lockwasher (7), and terminal of POSITIVE cable (5) from rear of alternator (4).

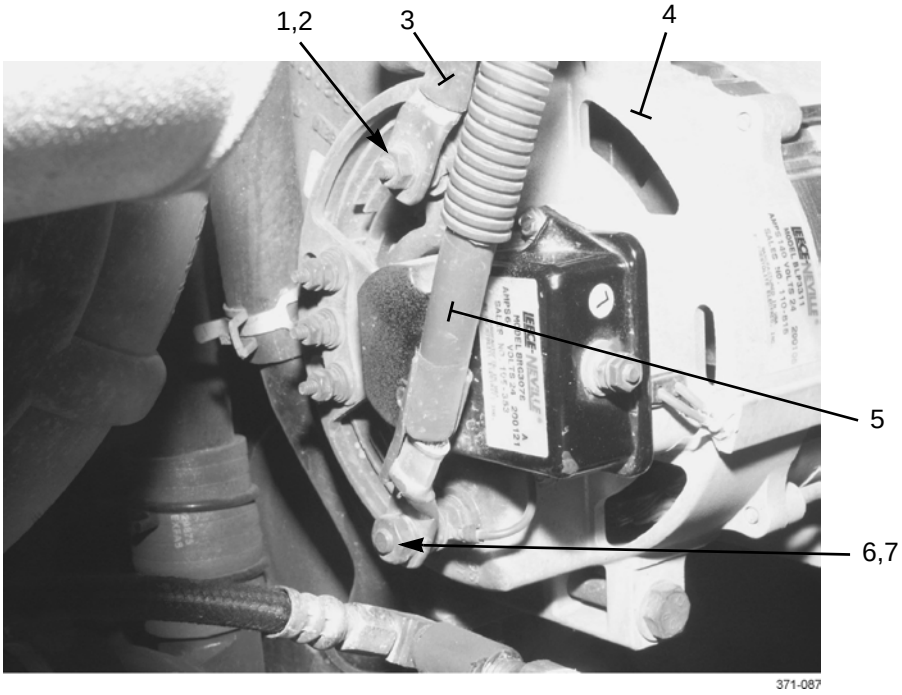

REMOVAL - CONTINUED

3. Remove four screws (8), washers (9), and alternator (4) from vehicle.
4. While holding alternator pulley (10) in a vise, remove nut (11) and washer (12).
5. Remove pulley (10) and key (3) from alternator (4). Retain pulley for use on new alternator.

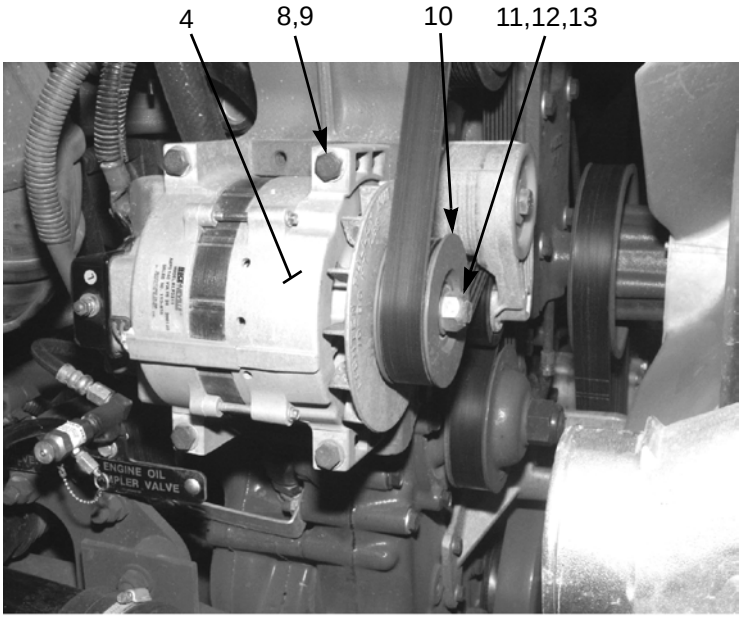

371-075

INSTALLATION

1. Position key (13) and pulley (10) to alternator (4).
2. While holding alternator pulley (10) in a vise, install washer (12) and nut (11).

INSTALLATION - CONTINUED

3. Install alternator (4) to vehicle with four washers (9) and screws (8).

CAUTION

To prevent damage to alternator, ensure that clear plastic insulator separates POSITIVE cable from rear of alternator.

4. Install terminal of POSITIVE cable (5) to rear of alternator (4) with lockwasher (7) and nut (6).
5. Install terminal of NEGATIVE cable (3) to rear of alternator (4) with lockwasher (2) and nut (1).

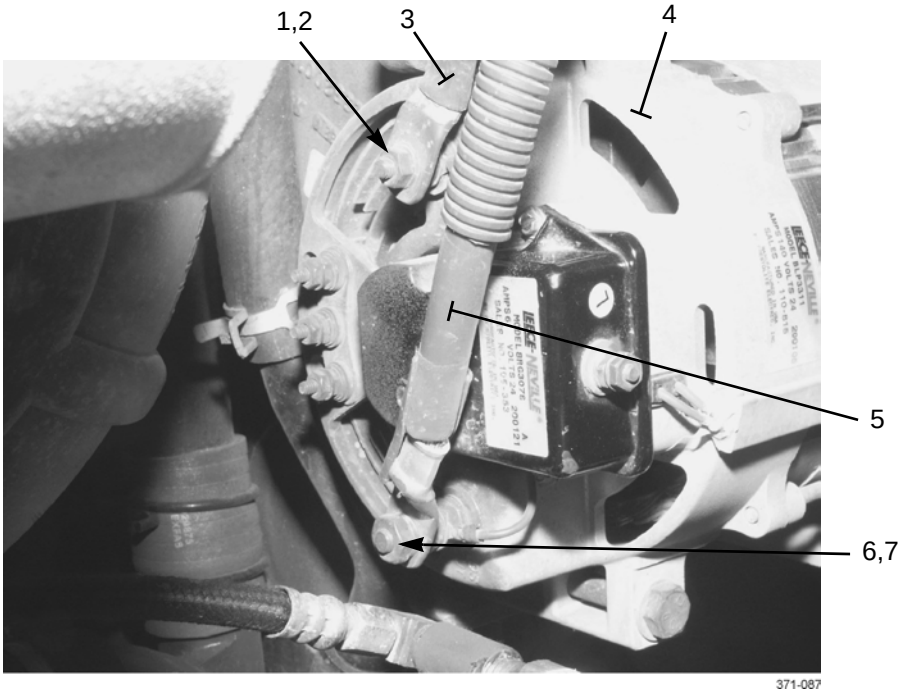

6. Install engine air intake tube and hoses at right side of engine (WP 0042 00).
7. Install alternator serpentine belt (WP 0063 00).

END OF WORK PACKAGE

STARTER REPLACEMENT (M915A3 OLD MODEL) 0067 00

THIS WORK PACKAGE COVERS

Removal, Installation

INITIAL SETUP

Tools and Special Tools

Tool kit, general mechanic's (Item 50, WP 0306 00)

Wrench, torque, 0-300 lb-in (Item 56, WP 0306 00)

Wrench, torque, 15-75 lb-ft (Item 57, WP 0306 00)

Wrench, torque, 50-250 lb-ft (Item 58, WP 0306 00)

Sling, nylon (Item 39, WP 0306 00)

Materials/Parts

Tag, marker (Item 34, WP 0305 00)

Personnel Required

Two

Equipment Condition

Master battery switch in OFF position (TM 9-2320-302-10)

Hood opened (TM 9-2320-302-10)

WARNING

Use extreme caution when handling heavy parts. Provide adequate support and use assistance during procedure. Ensure that any lifting device used is in good condition and of suitable load capacity. Keep clear of heavy parts supported only by lifting device. Failure to follow this warning may result in death or injury to personnel.

NOTE

Tag all cable and wires to ensure correct installation.

REMOVAL

1. Remove nut (4), washer (3), and cable (2), from threaded stud (1).
2. Remove nut (18), washer (19), cable (5), and three wires (6) from starter (9).
3. Remove nut (15), washer (16), and wire (17) from starter (9).
4. Remove nut (11), washer (12), cable (13), ground strap (14), and two wires (10) from starter (9).
5. While supporting starter (9), remove three screws (8). Remove starter from engine flywheel housing (7).

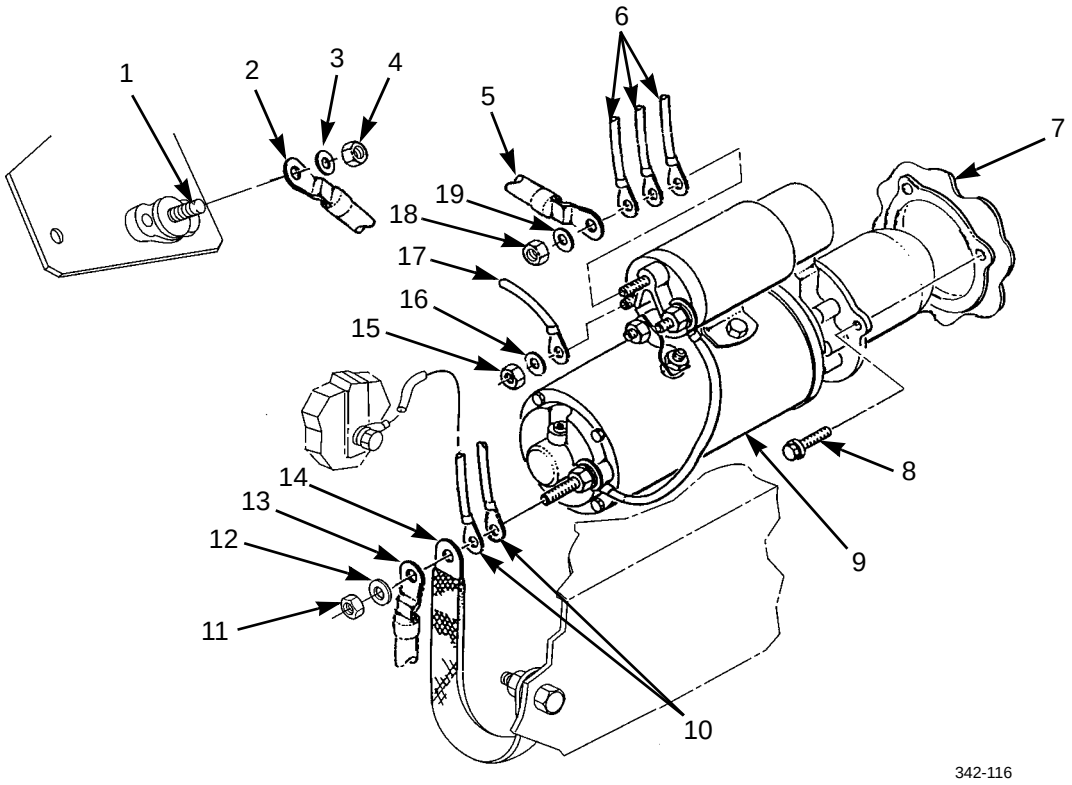

INSTALLATION

1. While supporting starter (9), install starter on engine flywheel housing (7) with three screws (8). Do not fully tighten screws.

NOTE

For aluminum flywheel housings, tighten screws to 138-154 lb-ft (187-209 Nm). For cast iron flywheel housings, tighten screws to 181-226 lb-ft (245-306 Nm).

2. Tighten three screws (8).
3. Install two wires (10), ground strap (14), cable (13), washer (12), and nut (11) on starter (9). Tighten nut to 20-25 lb-ft (27-34 Nm).

INSTALLATION - CONTINUED

4. Install wire (17), washer (16), and nut (15) on starter (9). Tighten nut to 16-30 lb-ft (1.8-3.4 Nm).
5. Install three wires (6), cable (5), washer (8), and nut (18) on starter (9). Tighten nut to 16-30 lb-ft (1.8-3.4 Nm).
6. Install cable (2), washer (3), and nut (4) on threaded stud (1). Tighten nut to 16-30 lb-ft (1.8-3.4 Nm).

END OF WORK PACKAGE

STARTER REPLACEMENT (M915A3 NEW MODEL, M916A3, M917A2) 0068 00

THIS WORK PACKAGE COVERS

Removal, Installation

INITIAL SETUP

Tools and Special Tools

Tool kit, general mechanic's (Item 50, WP 0306 00)

Wrench, torque, 50-250 lb-ft (Item 58, WP 0306 00)

Sling, nylon (Item 39, WP 0306 00)

Materials/Parts

Tags, marker (Item 34, WP 0305 00)

Wire, nonelectrical (Item 38, WP 0305 00)

Gasket (P/N 5130995)

Materials/Parts - Continued

Screw (P/N 941598) (3)

Personnel Required

Two

Equipment Condition

Master battery switch in OFF position (TM 9-2320-302-10)

Hood opened (TM 9-2320-302-10)

WARNING

Use extreme caution when handling heavy parts. Provide adequate support and use assistance during procedure. Ensure that any lifting device used is in good condition and of suitable load capacity. Keep clear of heavy parts supported only by lifting device. Failure to follow this warning may result in death or injury to personnel.

REMOVAL

NOTE

Perform steps 1 through 3 for easier access to starter.

1. Remove screw (2), washer (3), terminal plate (1), and hose bracket (4) from left side of engine.

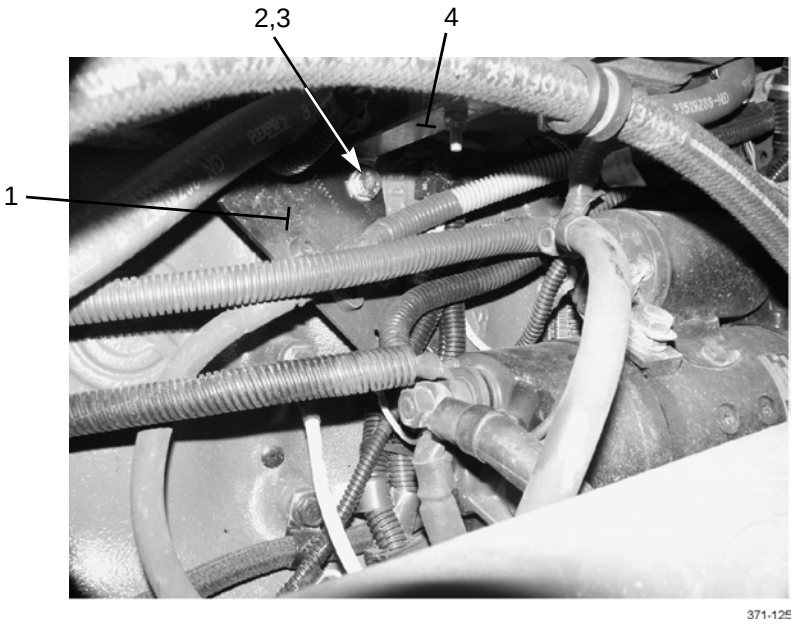

2. Remove locknut (5), two washers (6), screw (7), and clamp (9) from hose bracket (8).
3. Raise hose bracket (4) and hoses (10 and 11) and support from above with wire or twine.

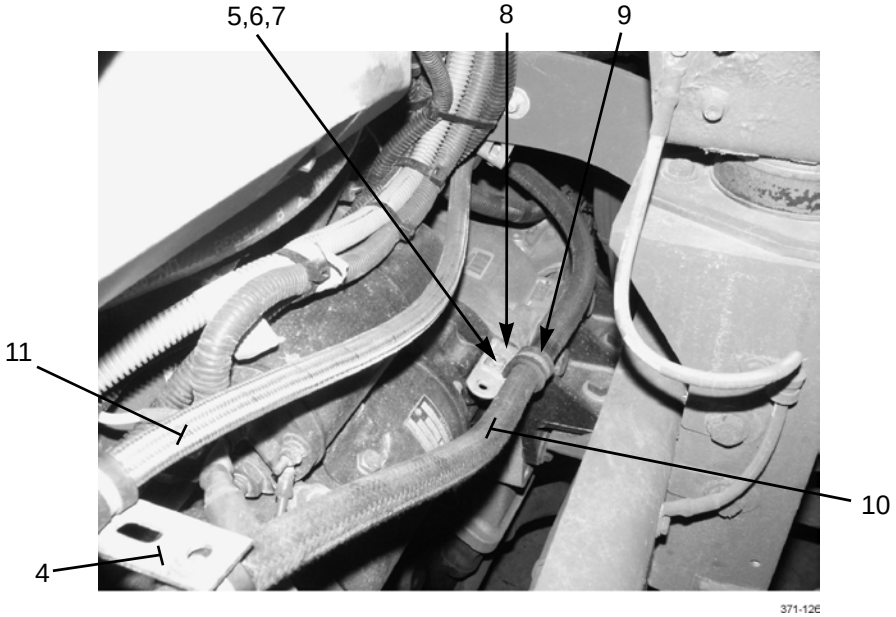

REMOVAL - CONTINUED

NOTE

Tag cables and wires to ensure correct installation.

4. At large terminal stud of solenoid (16), remove nut (13), washer (14), three cables (15), and white wire (12).
5. At small terminal stud toward back of solenoid (16), remove nut (18) and white wire (17).

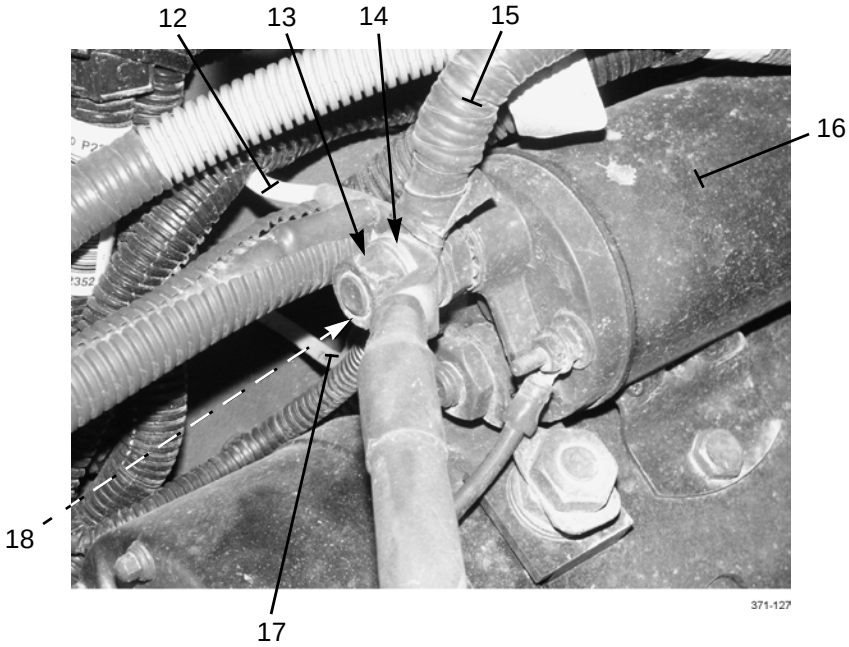

NOTE

Wire from solenoid to large terminal stud may remain attached.

6. At large terminal stud of starter (21), remove nut (19), four cables (20), and white wire (22).

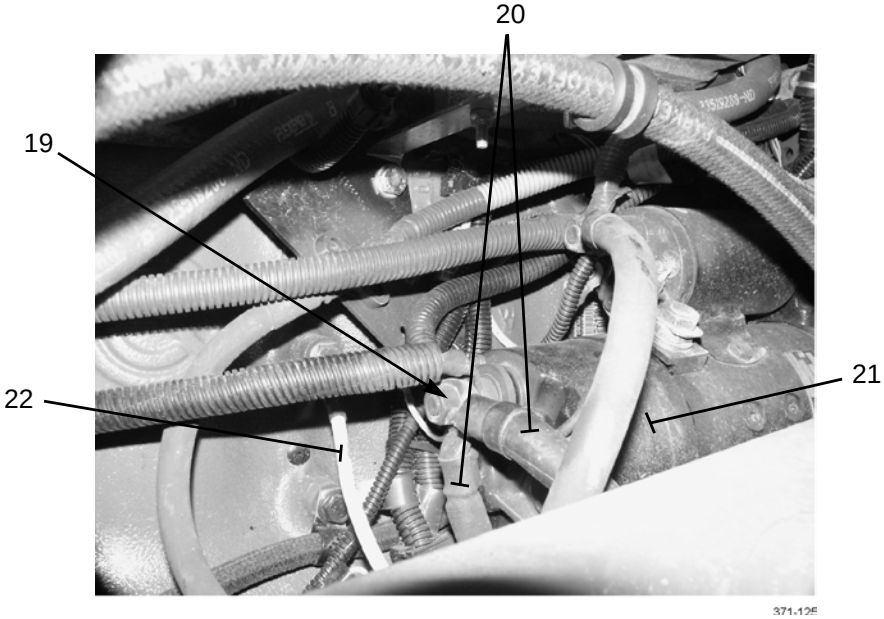

REMOVAL - CONTINUED

7. Install sling to starter (22) and attach sling to overhead lifting device. Take up slack in sling.
8. Remove three screws (24), hose bracket (8), starter (22), and gasket (23) from flywheel housing. Discard screws and gasket.

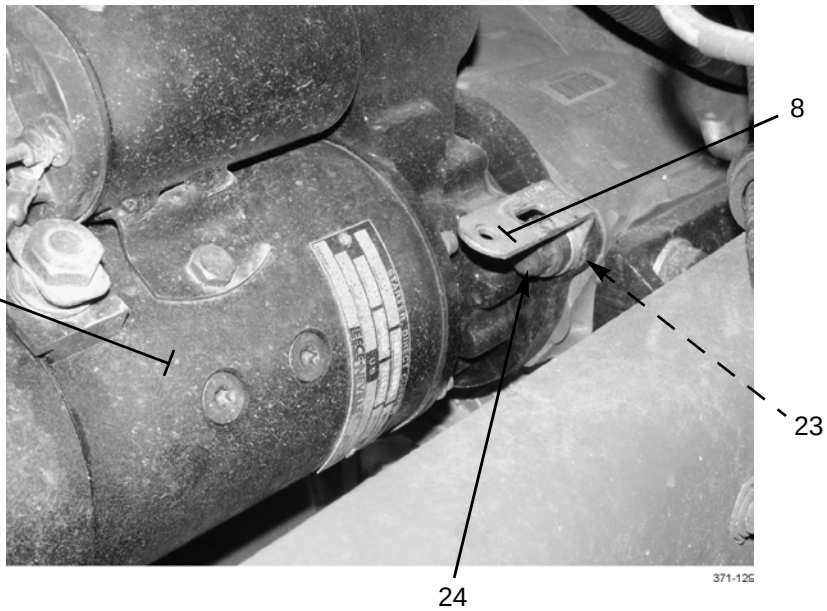

INSTALLATION

1. Install sling to starter (22) and attach sling to overhead lifting device.
2. Install new gasket (23), starter (22), and hose bracket (8) to flywheel housing with three new screws (24). Tighten screws to 138-154 lb-ft (181-209 Nm).
3. At large terminal stud of starter (21), install white wire (22) and four cables (20) with nut (19).

INSTALLATION - CONTINUED

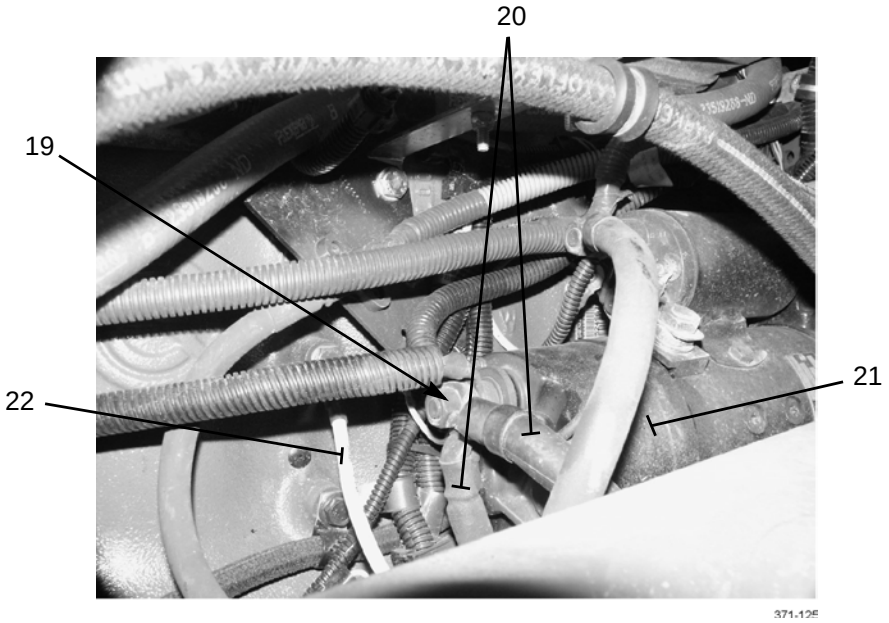

4. At small terminal stud toward back of solenoid (16), install white wire (17) with nut (18).

5. At large terminal stud of solenoid (16), install white wire (12) and three cables (15) with washer (14) and nut (13).

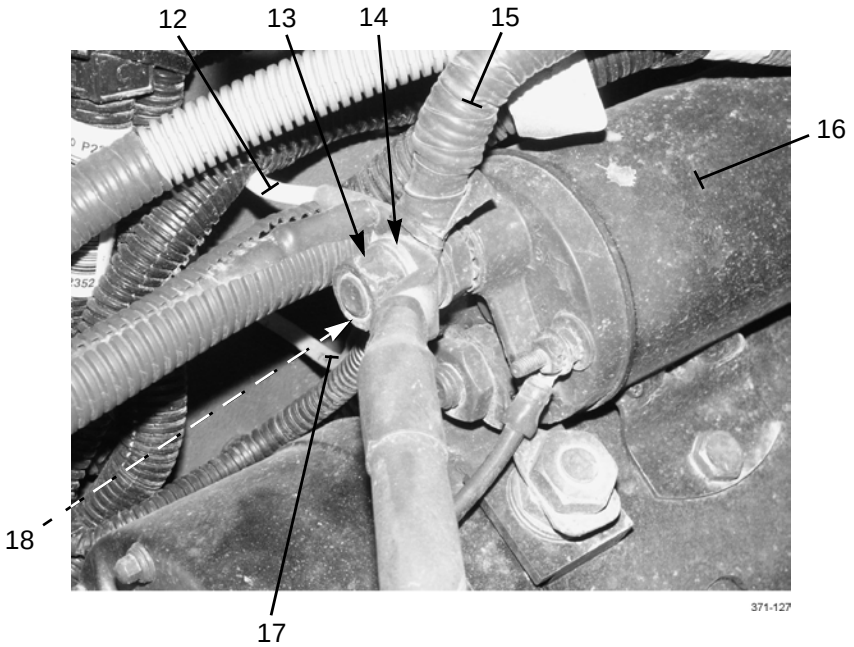

6. Lower hose bracket (4) and hoses (10 and 11).

7. Install clamp (9) to hose bracket (8) with screw (7), two washers (6), and locknut (5).

INSTALLATION - CONTINUED

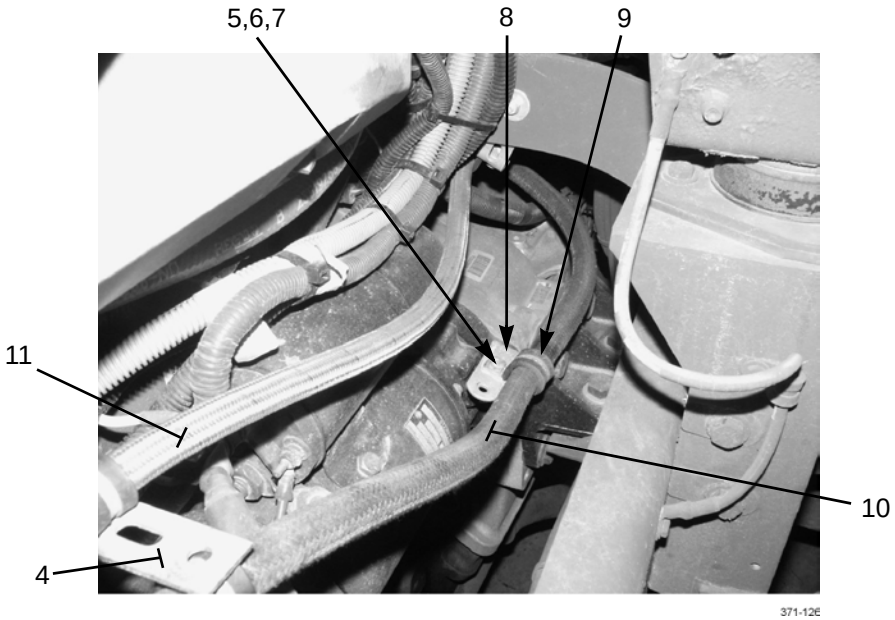

8. Install hose bracket (4) and terminal plate (1) to left side of engine with washer (3) and screw (2).

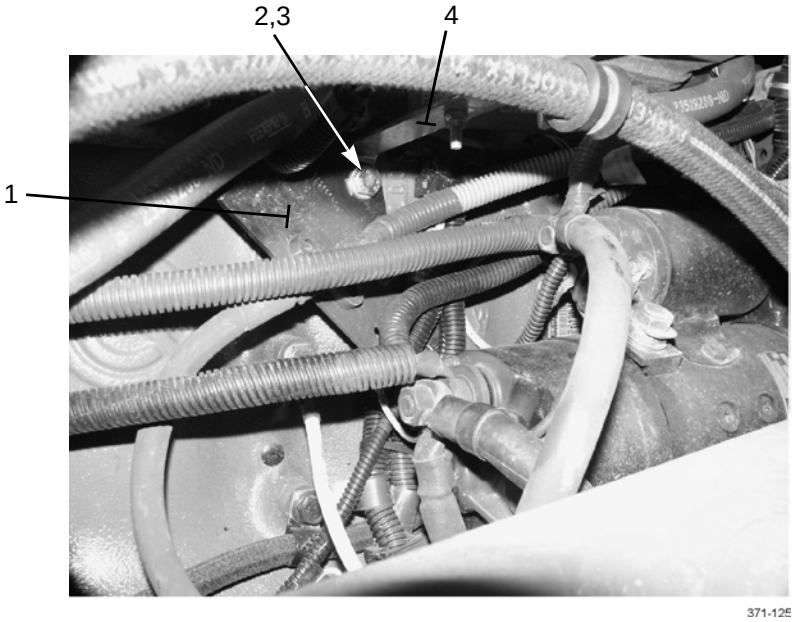

9. Start engine to check operation of starter (TM 9-2320-302-10).
10. Close hood (TM 9-2320-302-10).

END OF WORK PACKAGE

VOLTAGE REGULATOR REPLACEMENT (M915A3 OLD MODEL) 0069 00

THIS WORK PACKAGE COVERS

Removal, Installation

INITIAL SETUP

Tools and Special Tools

Tool kit, general mechanic's (Item 50, WP 0306 00)

Equipment Condition

Battery cables disconnected (WP 0145 00)

REMOVAL

1. Disconnect plug (4) from voltage regulator (1).
2. Remove six screws (3), six washers (2), six nuts (5), and voltage regulator (1).

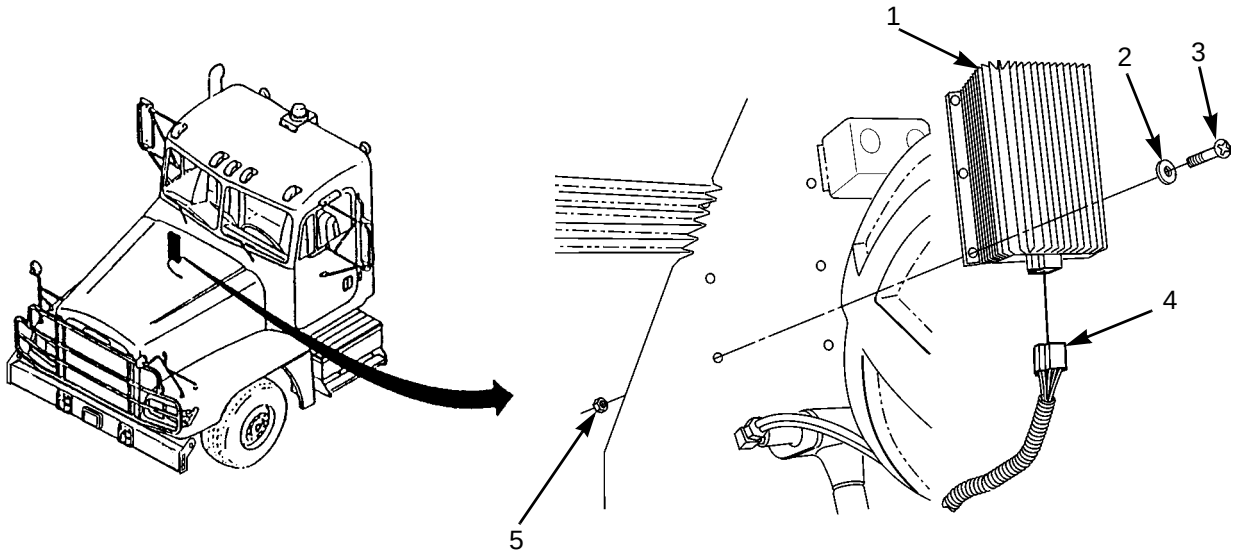

INSTALLATION

1. Install voltage regulator (1) with six washers (2), six screws (3), and six nuts (5).
2. Connect plug (4) on voltage regulator (1).
3. Connect battery cables (WP 0145 00).

END OF WORK PACKAGE

VOLTAGE REGULATOR REPLACEMENT (M915A3 NEW MODEL, M916A3, M917A2) 0070 00

THIS WORK PACKAGE COVERS

Removal, Installation

INITIAL SETUP

Tools and Special Tools

Tool kit, general mechanic's (Item 50, WP 0306 00)

References

TM 9-2320-302-10

Equipment Conditions

Master battery switch in OFF position (TM 9-2320-302-10)

REMOVAL

1. Remove nut (14), washer (15), red voltage regulator cable lead (10), nut (11), washer (12), and red cable lead (13) from bottom threaded stud (16).
2. Remove nut (2), washer (3), black voltage regulator cable lead (4), nut (5), and black cable lead (6) from top threaded stud (1).
3. Remove four screws (7) and voltage regulator (8) from alternator (9).

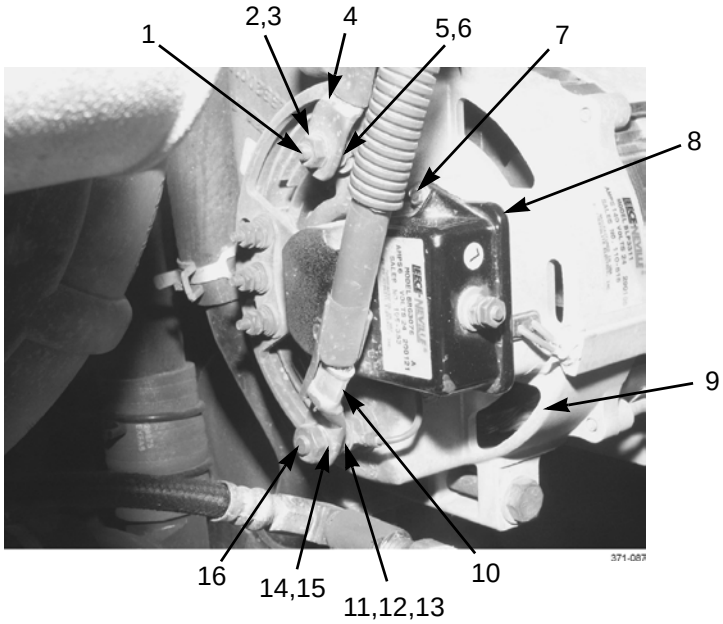

INSTALLATION

1. Position voltage regulator (8) on alternator pad with red lead (13) down.
2. Install four screws (7).
3. On top threaded stud (1), install black cable lead (6), nut (5), black voltage regulator cable lead (4), washer (3), and nut (2).
4. On bottom threaded stud (16), install red cable lead (13), washer (12), nut (11), red voltage regulator cable lead (10), washer (15), and nut (16).

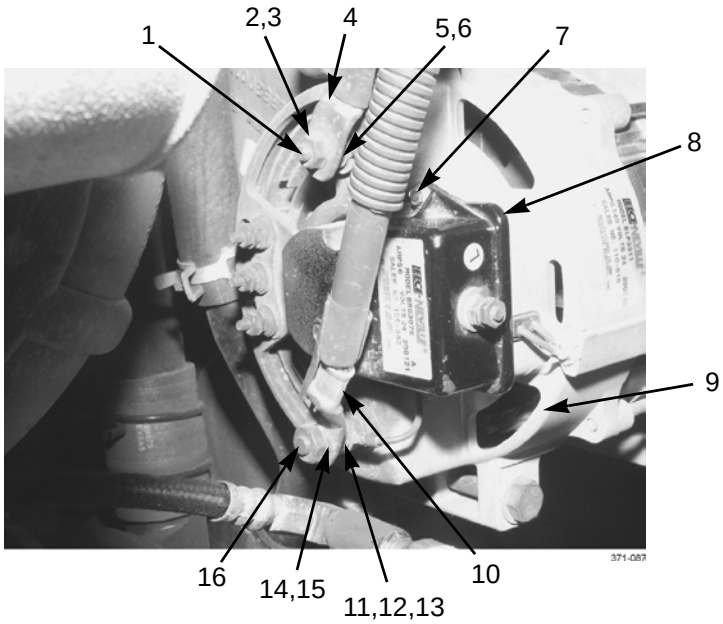

5. Start vehicle and check that voltmeter is in green band (TM 9-2320-302-10).

END OF WORK PACKAGE

BATTERY EQUALIZER REPLACEMENT 0071 00

THIS WORK PACKAGE COVERS

Removal, Installation, Test

INITIAL SETUP

Tools and Special Tools

Tool kit, general mechanic's (Item 50, WP 0306 00)

Wrench, torque, 0-300 lb-in (Item 56, WP 0306 00)

Materials/Parts

Tags, marker (Item 34, WP 0305 00)

Nut, lock (P/N M45913/1-4CGC) (8)

References

WP 0010 00

WP 0143 00

TM 9-2320-302-10

Equipment Condition

Master battery switch in OFF position (TM 9-2320-302-10)

NOTE

Battery equalizer on M916A3 and M917A2 vehicles is mounted with three terminals facing FRONT of vehicle. Terminals on M915A3 New Model equalizer face REAR of vehicle. Each is replaced the same way. M915A3 New Model is shown.

REMOVAL

NOTE

Tag cables to aid in installation.

1. Underneath battery box (14), remove nut (8), lockwasher (9), ground cable (11), and screw (10) from ground (GND) terminal of battery equalizer (1).
2. Remove nut (5), lockwasher (6), two cables (12), and screw (7) from 12V terminal.
3. Remove nut (2), lockwasher (3), two cables (13), and screw (4) from 24V terminal.

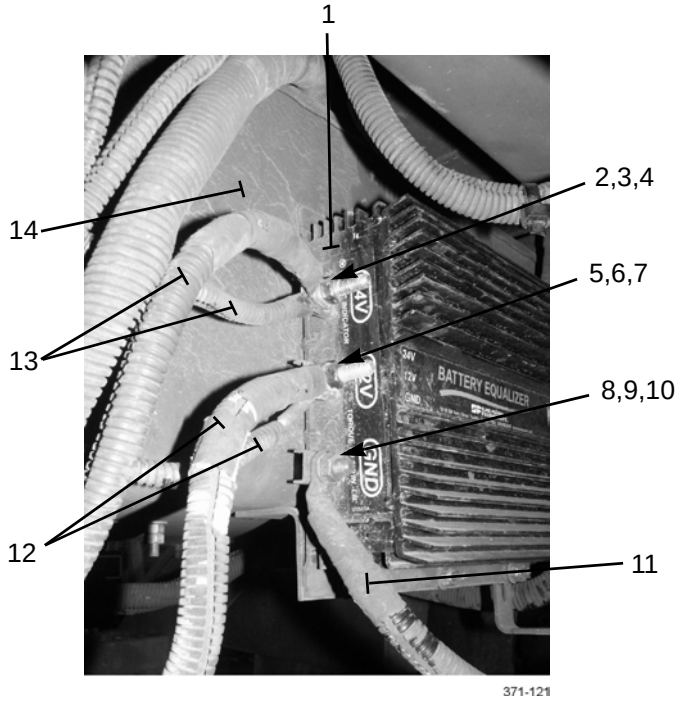

4. Remove six locknuts (16), 12 washers (17), six screws (18), cable bracket (15), and battery equalizer (1) from equalizer bracket (21) and battery box (14). Discard locknuts.

NOTE

Perform steps 5 and 6, only if bracket is damaged.

5. Remove batteries (WP 0143 00).
6. Remove two locknuts (19), four washers (20), two bolts (21), and equalizer bracket (22) from battery box (14). Discard locknuts.

BATTERY EQUALIZER REPLACEMENT - CONTINUED 0071 00

REMOVAL - CONTINUED

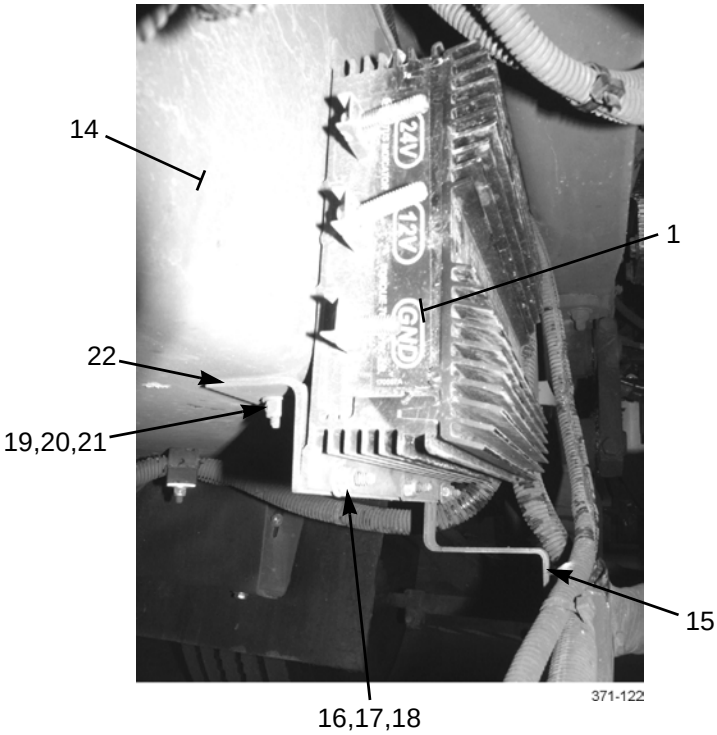

INSTALLATION

NOTE

Perform steps 1 and 2, only if bracket was removed.

1. Install equalizer bracket (22) to battery box (14) with four washers (20), two bolts (21), and two new locknuts (19).
2. Install batteries (WP 0143 00).

NOTE

Replacement battery equalizer comes with new mounting hardware for cable connections at GND, 12V, and 24V terminals.

3. Position screws (4, 7, and 10) at 24V, 12V, and GND equalizer terminals. Install battery equalizer (1) and cable bracket (15) to battery box (14) and equalizer bracket (21) with six screws (18), 12 washers (17), and six new locknuts (16).
4. Loosely install two cables (13), lockwasher (3), and nut (2) to screw (4) at 24V terminal of battery equalizer (1).
5. Loosely install two cables (12), lockwasher (6), and nut (5) to screw (7) at 12V terminal.
6. Loosely install ground cable (11), lockwasher (9), and nut (8) to screw (10) at ground (GND) terminal.
7. Tighten nuts (2, 5, and 8) to 110 lb-in (12.4 Nm).

TEST

1. Place master battery switch to ON position (TM 9-2320-302-10).
2. Place ignition switch to ON position (TM 9-2320-302-10).
3. Turn headlights or heater fan motor to HIGH position (TM 9-2320-302-10).
4. Green light on battery equalizer should come on immediately.
5. If green light does not come on immediately, refer to electrical troubleshooting (WP 0010 00).

END OF WORK PACKAGE

STARTER RELAY REPLACEMENT 0072 00

THIS WORK PACKAGE COVERS

Removal, Installation

INITIAL SETUP

Tools and Special Tools

Tool kit, general mechanic's (Item 50, WP 0306 00)

Materials/Parts

Tags, marker (Item 34, WP 0305 00)

Equipment Conditions

Master battery switch in OFF position (TM 9-2320-302-10)

REMOVAL

NOTE

Tag all wires to aid in installation.

1. Remove two nuts (1), two washers (2), and two leads (3) from starter relay (4).
2. Remove two nuts (5), two washers (6), and two leads (7) from starter relay (4).
3. Remove two bolts (8), lead (9), and starter relay (4).

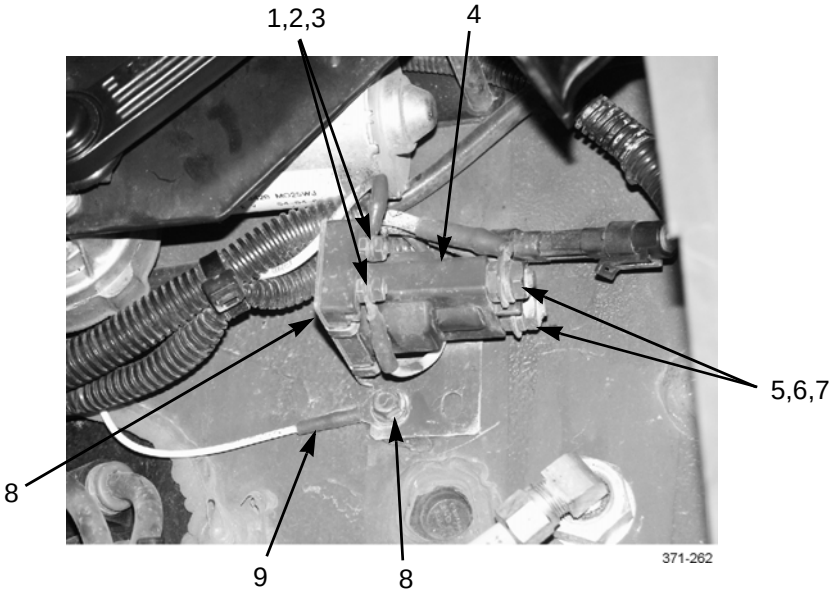

INSTALLATION

1. Position starter relay (4) on firewall and install lead (9) and two bolts (8).
2. Install two leads (7), two washers (6), and two nuts (5).
3. Install two leads (3), two washers (2), and two nuts (1).

END OF WORK PACKAGE

LEFT PANEL GAGES AND LAMPS REPLACEMENT 0073 00

THIS WORK PACKAGE COVERS

Removal, Installation

INITIAL SETUP

Tools and Special Tools

Tool kit, general mechanic's (Item 50, WP 0306 00)

Materials/Parts

Tags, marker (Item 34, WP 0305 00)

References

TM 9-2320-302-10

Equipment Condition

Air system drained (TM 9-2320-302-10)

Master battery switch in OFF position (TM 9-2320-302-10)

REMOVAL

1. Remove four screws (8) and pull panel (7) away from dashboard.
2. Remove three lamp holders (2) from engine oil pressure gage (9), engine water temperature gage (10), and voltmeter (11).

NOTE

Tag all plugs and tubes to aid in installation.

3. Remove two plugs (1), connector (13), and two tubes (3) from engine oil pressure gage (9), engine water temperature gage (10), and voltmeter (11). Remove panel (7).

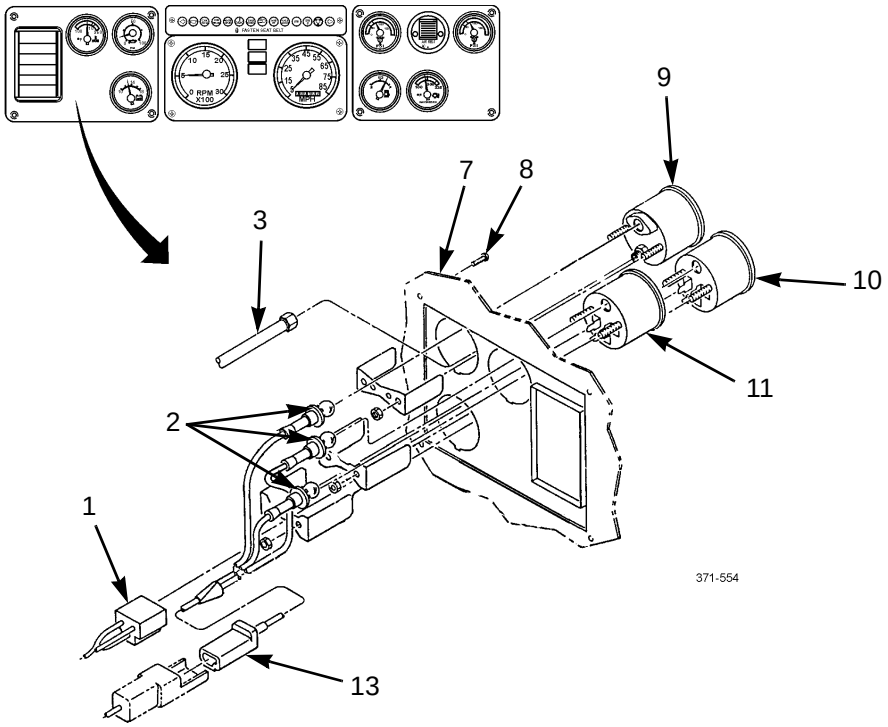

REMOVAL - CONTINUED

NOTE

Note location of gages to aid in installation.

4. Remove two locknuts (5), bracket (6), and engine oil pressure gage (9) from panel (7).
5. Repeat step 4 for engine water temperature gage (10) and voltmeter (11).
6. Remove air vent (12) from panel (7).
7. Turn three lamps (4) to left and remove from lamp holders (2).

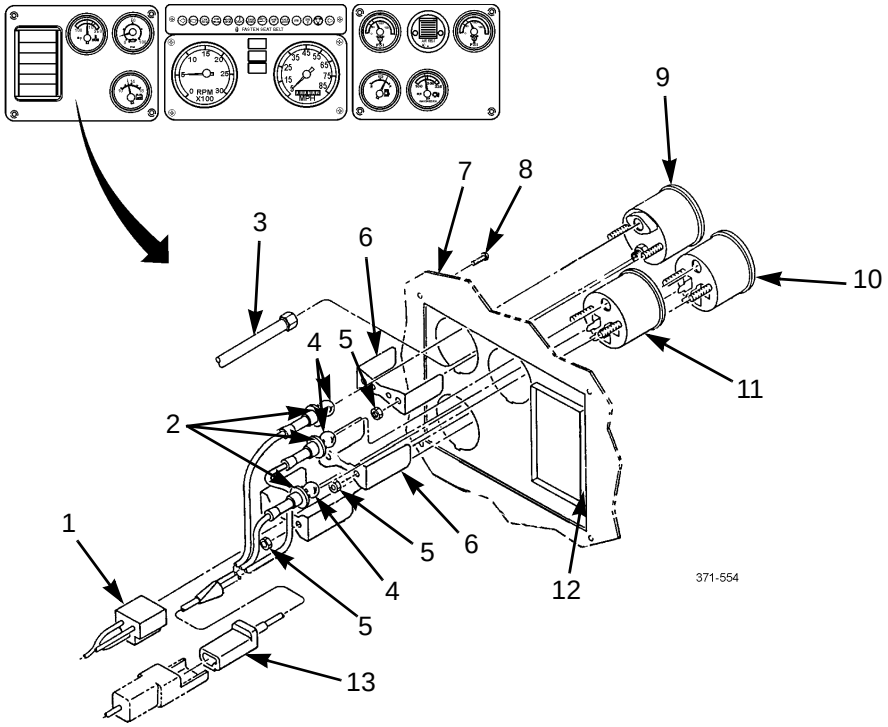

INSTALLATION

1. Install three lamps (4) in lamp holders (2). Turn lamps to right to lock in place.
2. Install air vent (12) on panel (7).
3. Install engine oil pressure gage (9) and bracket (6) on panel (7) with two locknuts (5).
4. Repeat step 3 for engine water temperature gage (10) and voltmeter (11).
5. Install three lamp holders (2) on engine oil pressure gage (9), engine water temperature gage (10), and voltmeter (11).
6. Install two tubes (3), connector (13), and two plugs (1) on engine oil pressure gage (9), engine water temperature gage (10), and voltmeter (11).
7. Install panel (7) on dashboard with four screws (8).
8. Run vehicle and build air pressure to proper level (TM 9-2320-302-10). Check operation of gages and check for air system leaks.

END OF WORK PACKAGE

CENTER PANEL GAGES REPLACEMENT 0074 00

THIS WORK PACKAGE COVERS

Removal, Installation

INITIAL SETUP

Tools and Special Tools

Tool kit, general mechanic's (Item 50, WP 0306 00)

Materials/Parts

Tags, marker (Item 34, WP 0305 00)

References

TM 9-2320-302-10

Equipment Condition

Master battery switch in OFF position (TM 9-2320-302-10)

REMOVAL

1. Remove four screws (7) and pull panel (6) away from dashboard.

NOTE

Tag connectors to aid in installation.

2. Disconnect two connectors (15) from cab wiring harness connectors (16).

NOTE

Depending on model, center gage panel has three, five or six indicator lights.

3. Remove cab wiring harness connectors (3) from indicator lights (10). Remove indicator lights.
4. Remove connector (2) from cab wiring harness connector (1). Remove panel (6).
5. Remove two screws (14), bracket (13), and tachometer (12) from panel (6). Remove lamp (11) from tachometer.
6. Remove two screws (4), bracket (5), and speedometer (9) from panel (6). Remove lamp (8) from speedometer.

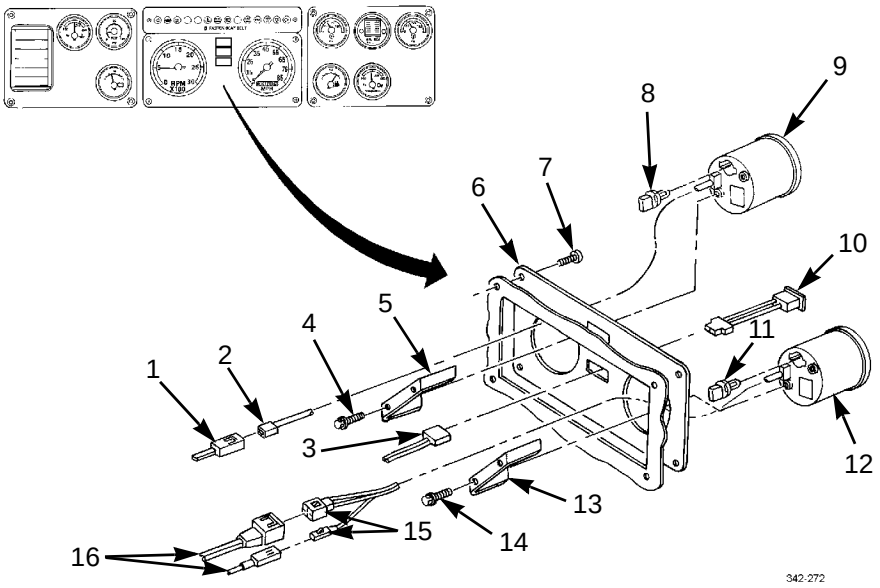

INSTALLATION

NOTE

Depending on model, center gage panel has three, five or six indicator lights.

1. Install indicator lights (10) on panel (6).
2. Install speedometer (9) on panel (6) with bracket (5) and two screws (4). Install lamp (8) in speedometer.
3. Install tachometer (12) to panel (6) with bracket (13) and two screws (14). Install lamp (11) in tachometer.
4. Install connector (2) on cab wiring harness connector (1).
5. Install cab wiring harness connectors (3) to indicator lights (10).
6. Connect two connectors (15) to cab wiring harness connectors (16).
7. Install panel (6) on dashboard with four screws (7).
8. Start vehicle (TM 9-2320-302-10). Check gages and lights for proper operation.

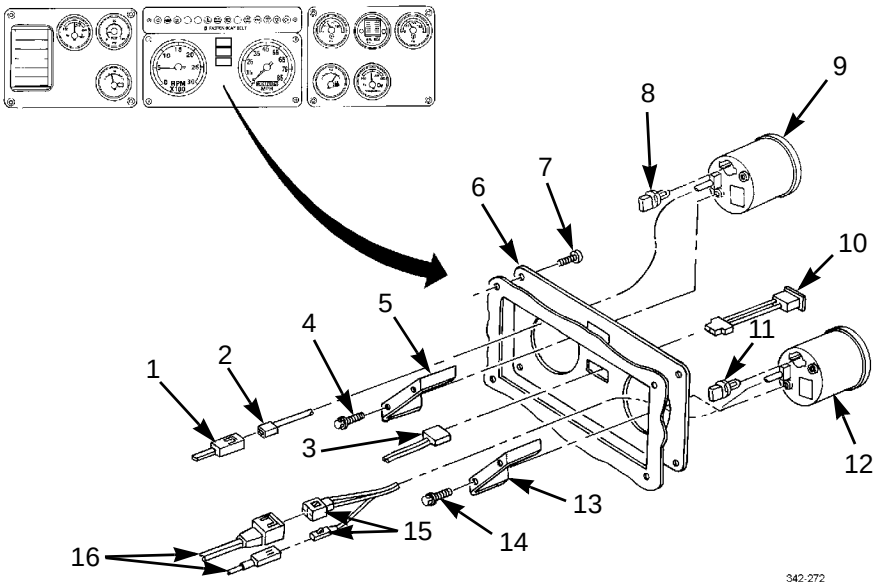

END OF WORK PACKAGE

RIGHT PANEL GAGES AND LAMPS REPLACEMENT 0075 00

THIS WORK PACKAGE COVERS

Removal, Installation

INITIAL SETUP

Tools and Special Tools

Tool kit, general mechanic's (Item 50, WP 0306 00)

Materials/Parts

Tags, marker (Item 34, WP 0305 00)

Equipment Condition

Air system drained (TM 9-2320-302-10)

Master battery switch in OFF position (TM 9-2320-302-10)

References

TM 9-2320-302-10

REMOVAL

1. Remove four screws (2) and pull panel (1) away from dashboard.

NOTE

Tag all air tubes, connectors, and gages prior to removal to aid in installation.

2. Remove connector (16) from cab wiring harness connector (17).

NOTE

M916A3 and M917A2 have a transfer case oil temperature gage next to the transmission oil temperature gage. Both gages are replaced the same way.

3. Remove two connectors (15) from fuel level gage (8) and transmission oil temperature gage (6).
4. Remove two tubes (9) from air pressure gages (3 and 7). Disconnect tube (18) from air cleaner restriction indicator gage (4).
5. Remove panel (1) from dashboard.

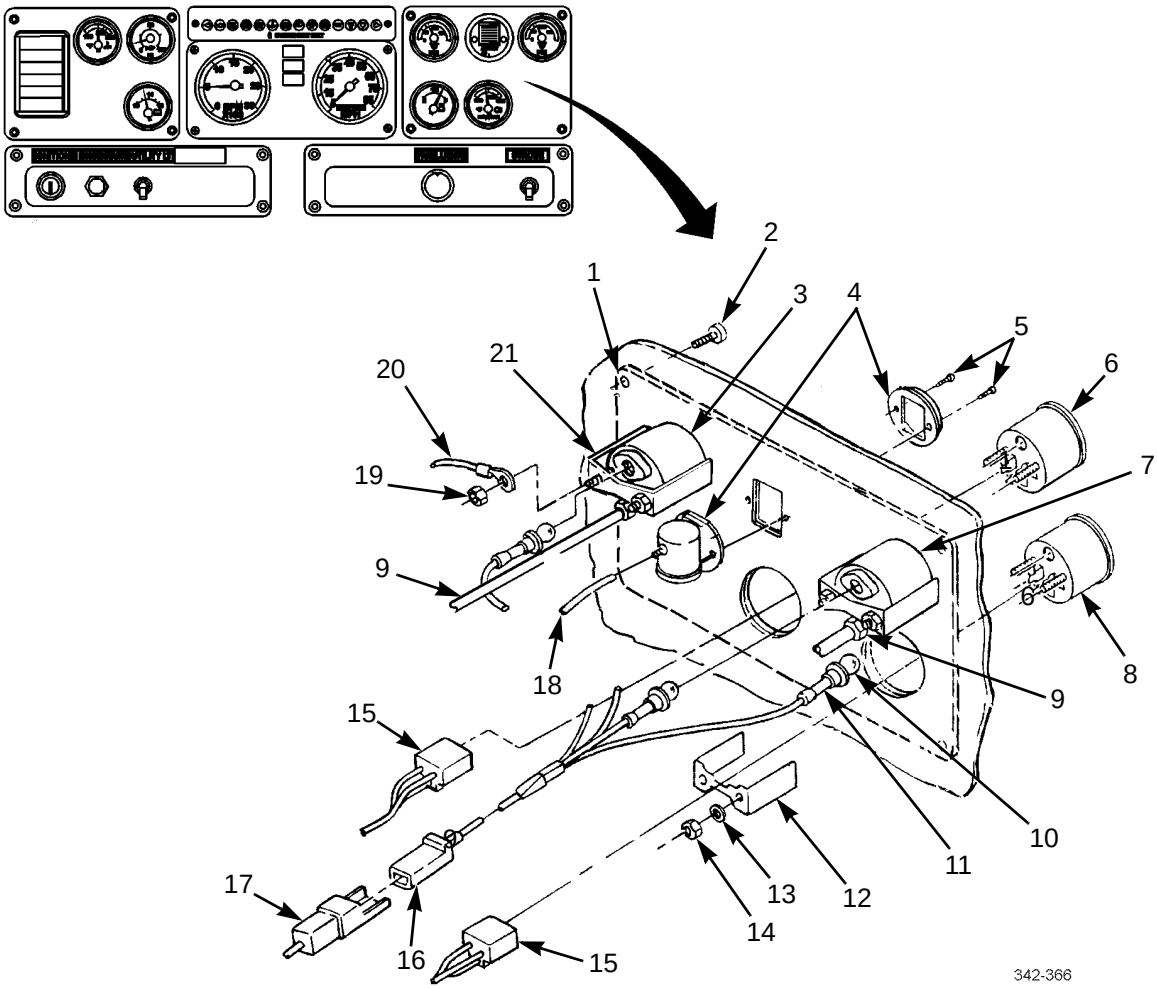

REMOVAL - CONTINUED

6. Remove four lamp holders (11) from fuel level gage (8), transmission oil temperature gage (6), and two air pressure gages (3 and 7).
7. Remove four locknuts (19), ground wire (20), two brackets (21), and two air pressure gages (3 and 7) from panel (1).
8. Remove four nuts (14), washers (13), two brackets (12), fuel level gage (8), and transmission oil temperature gage (6) from panel (1).
9. Remove two screws (5) and air cleaner restriction indicator gage (4) from panel (1).
10. Turn four lamps (10) to left and remove from lamp holders (11).

INSTALLATION

1. Install four lamps (10) in lamp holders (11). Turn lamps to right to lock in place.
2. Install air cleaner restriction indicator gage (4) on panel (1) with two screws (5).
3. Install fuel level gage (8) and transmission oil temperature gage (6) on panel (1) with two brackets (12), four washers (13), and nuts (14).
4. Install two air pressure gages (3 and 7) on panel (1) with two brackets (21), ground wire (20), and four new locknuts (19).
5. Install four lamp holders (11) on fuel level gage (8), transmission oil temperature gage (6), and two air pressure gages (3 and 7).
6. Install two tubes (9) to air pressure gages (3 and 7). Connect tube (18) to air cleaner restriction indicator gage (4).
7. Install two connectors (15) on fuel level gage (8) and transmission oil temperature gage (6).
8. Install connector (16) on cab wiring harness connector (17).
9. Install panel (1) on dashboard with four screws (2).
10. Start vehicle (TM 9-2320-302-10). Check gages and lights for proper operation.

END OF WORK PACKAGE

UPPER RIGHT DASH PANEL REPLACEMENT 0076 00

THIS WORK PACKAGE COVERS

Removal, Installation

INITIAL SETUP

Tools and Special Tools

Tool kit, general mechanic's (Item 50, WP 0306 00)

Materials/Parts

Compound, sealing, pipe (Item 13, WP 0305 00)

Tags, marker (Item 34, WP 0305 00)

Equipment Condition

Parking brake and trailer air supply valve removed (WP 0202 00)

Master battery switch in OFF position (TM 9-2320-302-10)

References

TM 9-2320-302-10

NOTE

Tag air tubes and electrical connectors to aid in installation.

REMOVAL

1. Remove five screws (8) and pull panel (7) away from dash enough to access rear of panel.

NOTE

Perform steps 2 and 3 on M916A3 and M917A2.

2. Remove connector (3) from PTO switch (10).
3. Depress tangs on PTO switch (10) and remove PTO switch from panel (7).

NOTE

Perform steps 4 through 6 on M915A3 New Model, M916A3, and M917A2.

4. Remove connector (31) from 12V power receptacle (13)
5. Remove 12V power receptacle (13) from cap assembly (12).
6. Remove cap assembly (12) from panel (7).
7. Remove connector (1) from light switch (2).
8. Remove four screws (11), and light switch (2) from panel (7).
9. As required, remove three screws (4), knobs (5), and washers (6) from light switch (2).
10. Remove two connectors (27) from switches (26).
11. Remove three fiber optic labels (25) from panel (7).
12. Remove three label holders (18), two nuts (17), and two switches (26) from panel (7).
13. Remove two tubes (22) and connector (24).

REMOVAL - CONTINUED

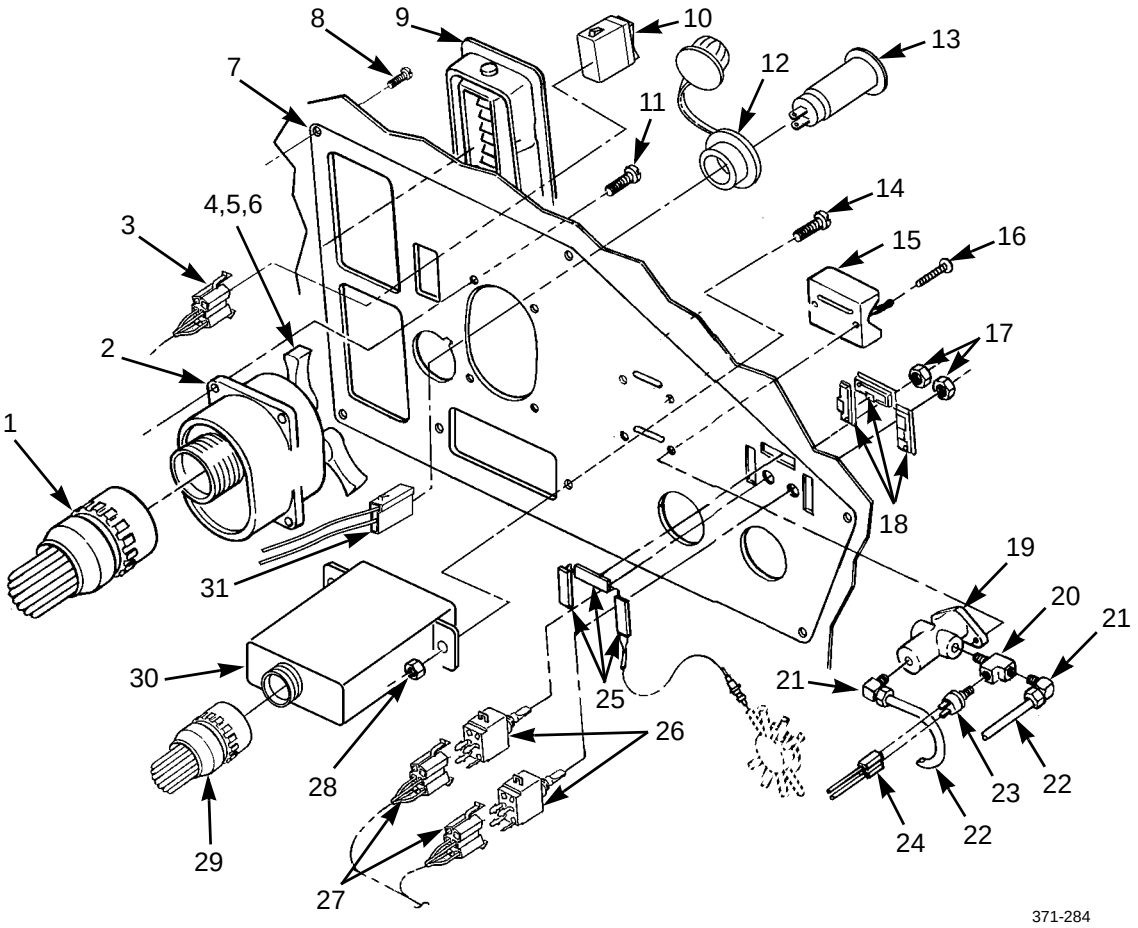

NOTE

Two control valves are removed the same way. One control valve is illustrated. Perform steps 14 and 15 for all control valves.

14. Remove two screws (16), guard (15), and control valve (19) from panel (7).
15. Remove two elbows (21), sending unit (23), and tee (20) from control valve (19).
16. Remove connector (29) from driver display unit (30).
17. Remove two screws (14), two nuts (28), and driver display unit (30) from panel (7).
18. Remove two air vents (9) from panel (7).
19. Remove panel (7) from dashboard.

INSTALLATION

1. Install two air vents (9) on panel (7).
2. Position panel (7) to dashboard.
3. Install driver display unit (30) to panel (7) with two screws (14) and two nuts (28).
4. Install connector (29) to driver display unit (30).

INSTALLATION - CONTINUED


WARNING

Adhesives and sealing compounds can burn easily, can give off harmful vapors, and are harmful to skin and clothing. To avoid injury or death, keep away from open fire and use in a well-ventilated area. If adhesive or sealing compound contacts skin or clothing, wash immediately with soap and water.

NOTE

- Two control valves are installed the same way. One control valve is illustrated. Perform steps 5 and 6 for all control valves.
- Apply pipe sealing compound to threads of all fittings before installation.

5. Install tee (20), two elbows (21), and sending unit (23) on control valve (19).
6. Install control valve (19) and guard (15) on panel (7) with two screws (16).
7. Install two tubes (22). Install connector (24) on sending unit (23).
8. Install three label holders (18) on panel (7).
9. Install two switches (26) on panel (7) with two nuts (17).
10. Install three fiber optic labels (25) on panel (7).
11. Install two connectors (27) on switches (26).
12. If removed, install three washers (6), knobs (5), and screws (4) on light switch (2).
13. Install light switch (2) on panel (7) with four screws (11).
14. Install connector (1) on light switch (2).

NOTE

Perform steps 15 through 17 on M915A3 New Model, M916A3, and M917A2.

15. Install cap assembly (12) on panel (7).
16. Install 12V power receptacle (13) in cap assembly (12).
17. Connect connector (31) to 12V power receptacle (13).

NOTE

Perform steps 18 and 19 on M916A3 and M917A2.

18. Install PTO switch (10) on panel (7). Ensure tangs on switch snap into place on panel.
19. Connect connector (3) to PTO switch (10).
20. Position panel (7) on dash and install five screws (8).

INSTALLATION - CONTINUED

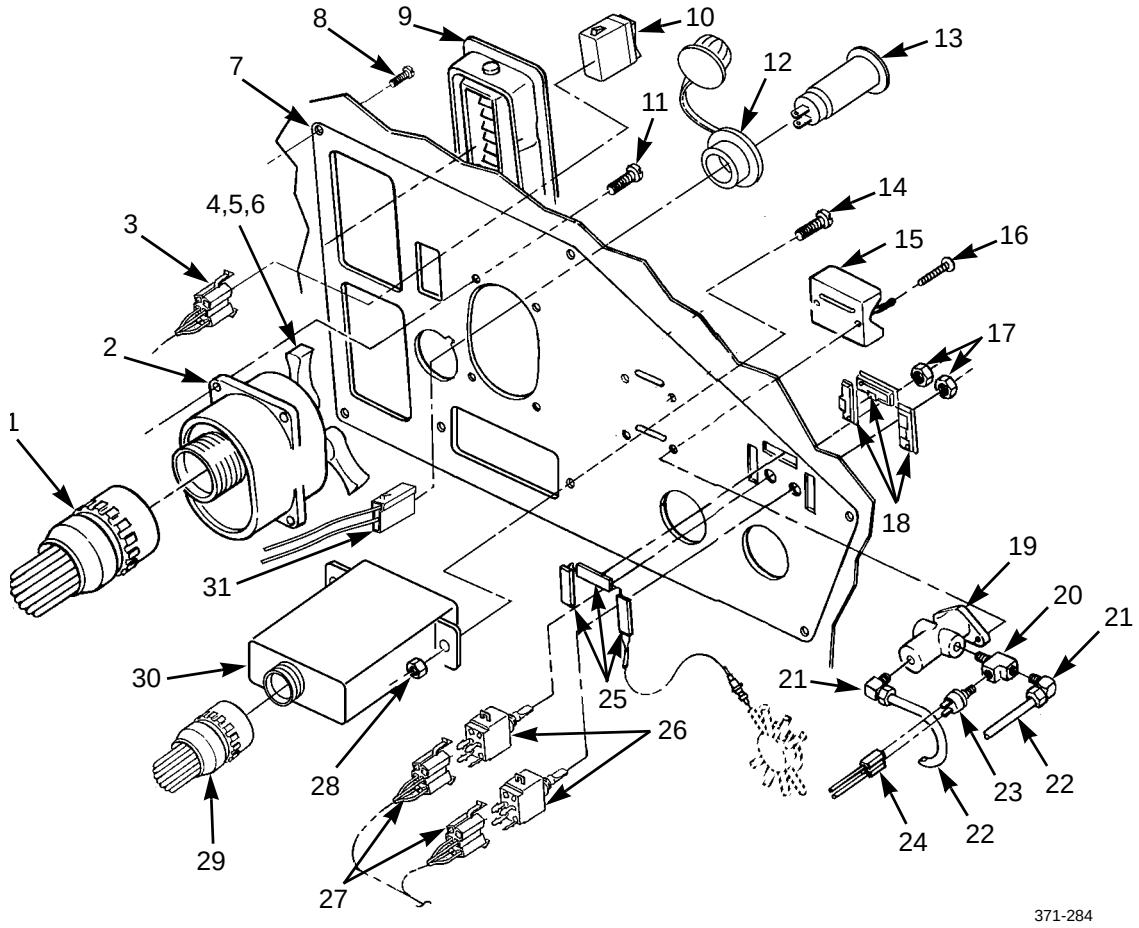

21. Install parking brake and trailer air supply valve (WP 0202 00).
22. Start vehicle and check all dash panel functions (TM 9-2320-302-10).

END OF WORK PACKAGE

LEFT HAND SWITCH PANEL REPLACEMENT 0077 00

THIS WORK PACKAGE COVERS

Removal, Installation

INITIAL SETUP

Tools and Special Tools

Tool kit, general mechanic's (Item 50, WP 0306 00)

Materials/Parts

Tags, marker (Item 34, WP 0305 00)

Equipment Condition

Master battery switch in OFF position (TM 9-2320-302-10)

References

TM 9-2320-302-10

NOTE

Tag all connectors to aid in installation.

REMOVAL

1. Remove four screws (1) and pull panel (2) out of dashboard.

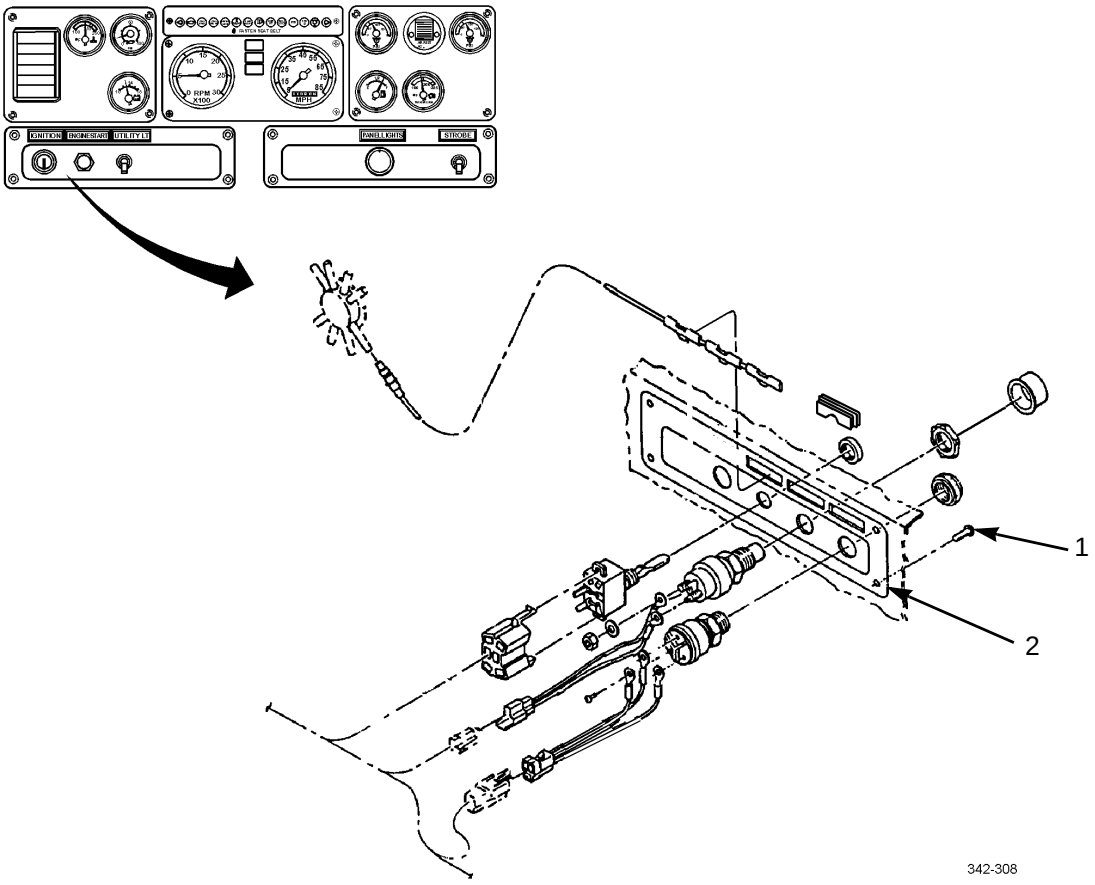

LEFT HAND SWITCH PANEL REPLACEMENT- CONTINUED 0077 00

REMOVAL - CONTINUED

2. Remove plug (4) and two connectors (3) and remove panel (2).
3. Remove three fiber optic labels (8) and label holders (9) from panel (2).
4. Remove three screws (12), pigtail (14), two nuts (5), washers (6), and pigtail (13) from panel (2).
5. Remove boot (11), three nuts (10), and switches (7) from panel (2).

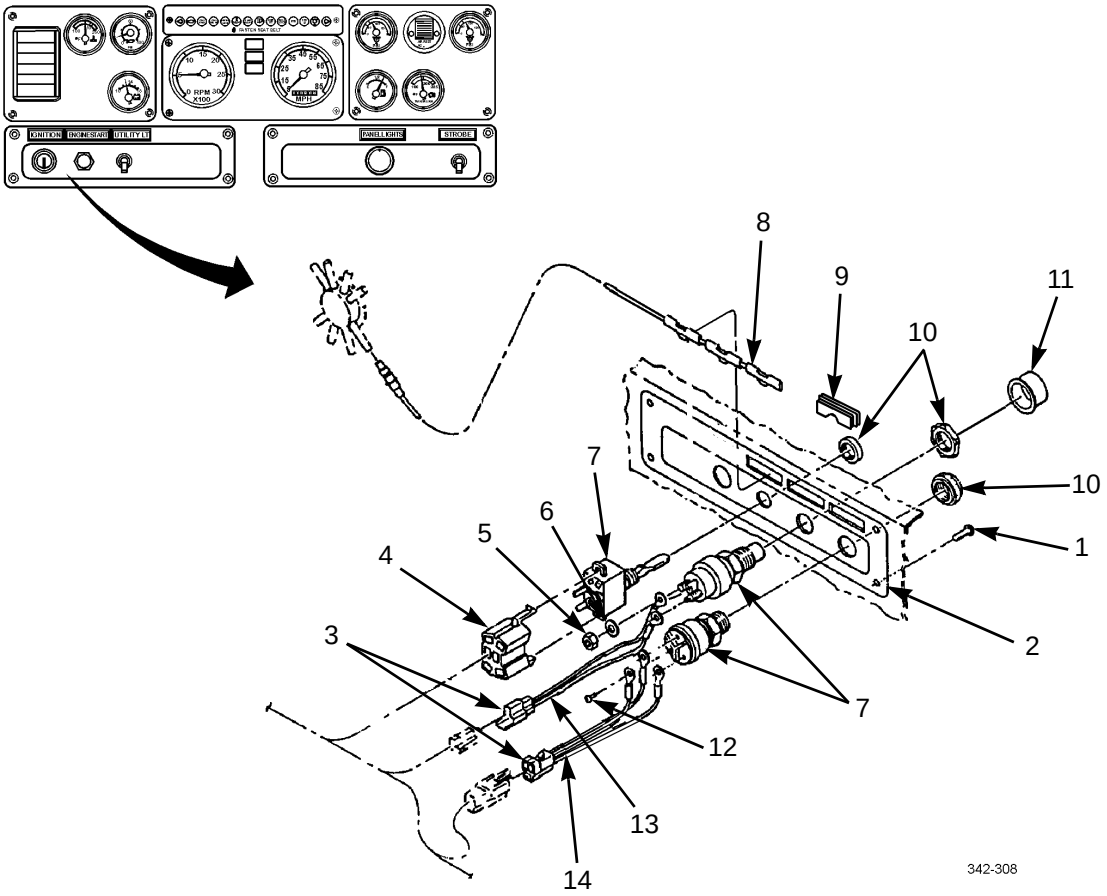

INSTALLATION

1. Install three switches (8) on panel (2) with three nuts (10) and boot (11).
2. Install pigtail (13), two washers (6), nuts (5), pigtail (14), and three screws (12) on panel (2).
3. Install two connectors (3) and plug (4).
4. Install three label holders (9) and fiber optic labels (8) on panel (2).
5. Install panel (2) on dashboard with four screws (1).
6. Start vehicle and check all switch panel functions (TM 9-2320-302-10).

END OF WORK PACKAGE

RIGHT HAND SWITCH PANEL REPLACEMENT 0078 00

THIS WORK PACKAGE COVERS

Removal, Installation

INITIAL SETUP

Tools and Special Tools

Tool kit, general mechanic's (Item 50, WP 0306 00)

Materials/Parts

Tags, marker (Item 34, WP 0305 00)

Equipment Condition

Master battery switch in OFF position (TM 9-2320-302-10)

References

TM 9-2320-302-10

NOTE

Tag all wires and connectors to aid in installation.

REMOVAL

1. Remove four screws (8) and pull panel (3) away from dashboard.
2. Disconnect four plugs (1) and connector (10) from five switches (2).
3. Loosen two setscrews (6) and remove knob (7), five nuts (5), and five switches (2) from panel (3).
4. Remove four fiber optic labels (9) and label holders (4) from panel (3).

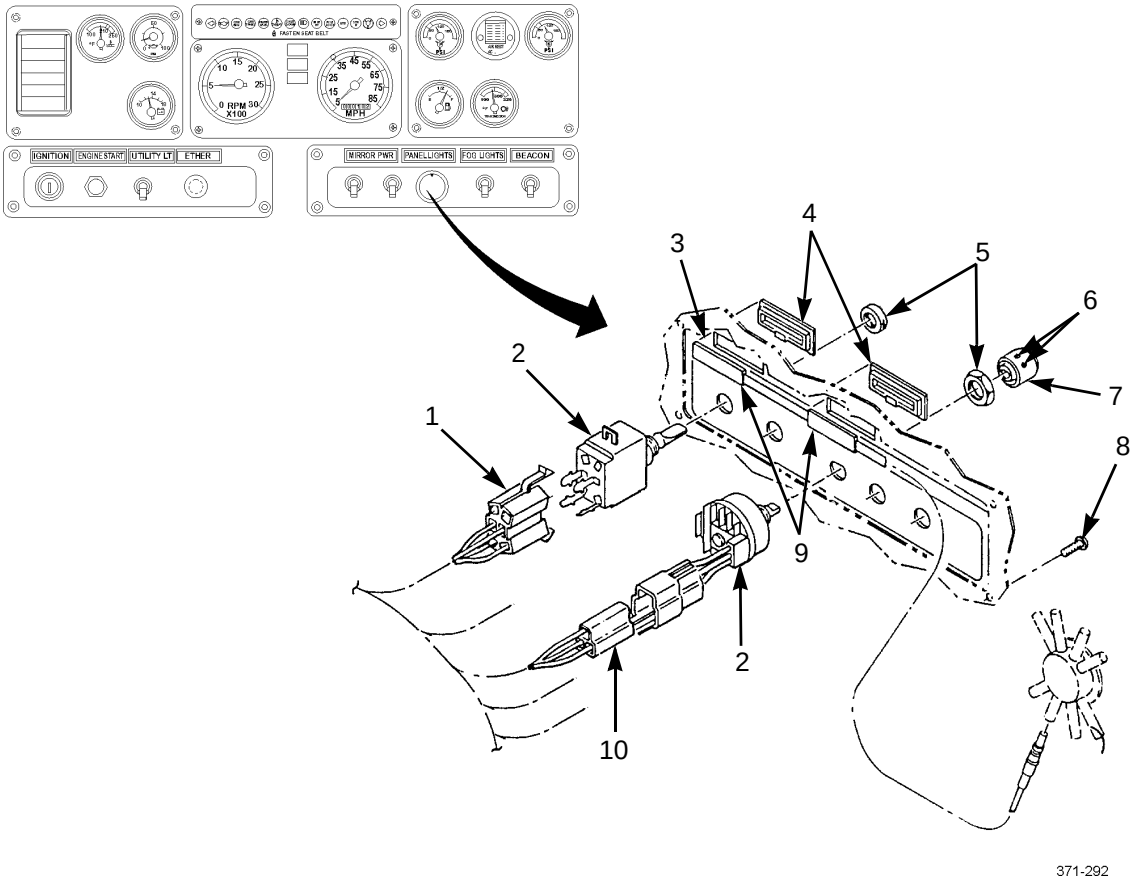

RIGHT HAND SWITCH PANEL REPLACEMENT - CONTINUED 0078 00

INSTALLATION

1. Install four label holders (4) and fiber optic labels (9) on panel (3).
2. Install five switches (2) on panel (3) with five nuts (5).
3. Install knob (7) on panel (3) and tighten two setscrews (6).
4. Install connector (10) and four plugs (1) on five switches (2).
5. Install panel (3) on dashboard with four screws (8).

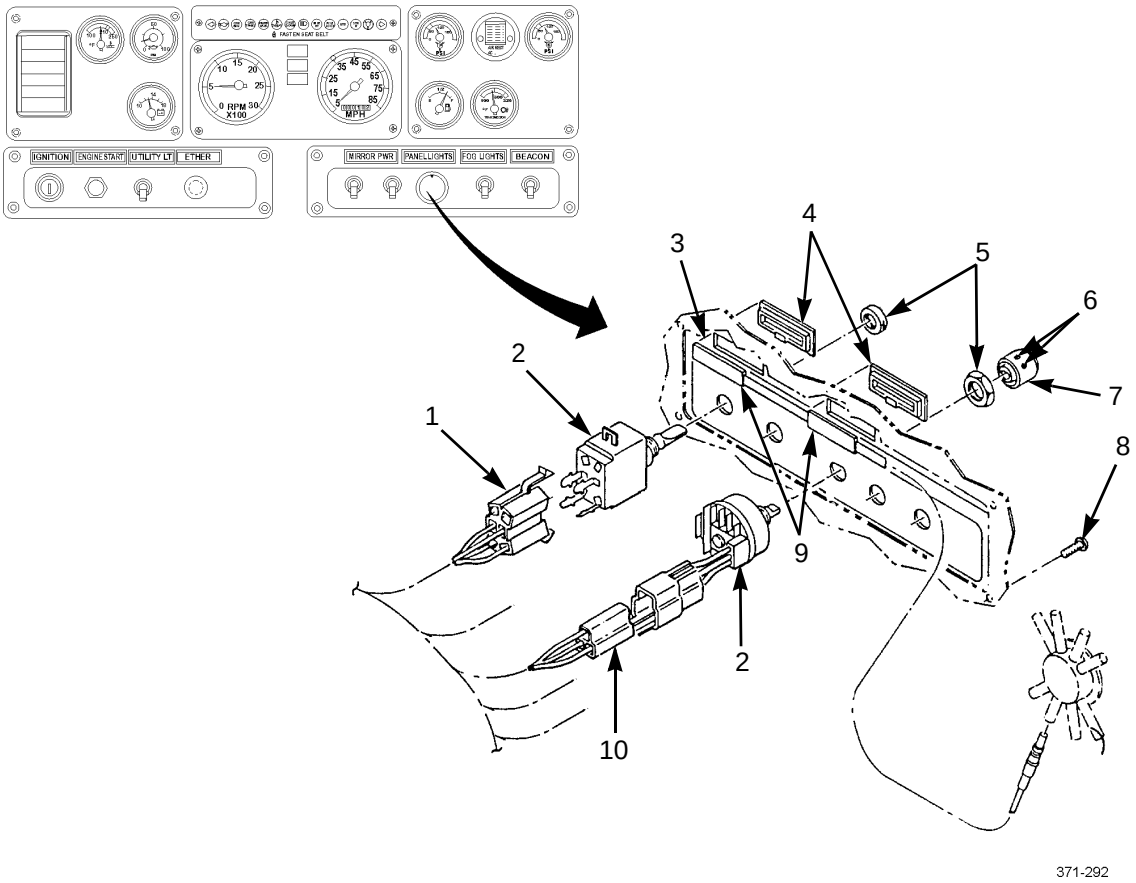

6. Start vehicle and check all switch panel functions (TM 9-2320-302-10).

END OF WORK PACKAGE

CONTROL MODULE REPLACEMENT 0079 00

THIS WORK PACKAGE COVERS

Removal, Installation

INITIAL SETUP

Tools and Special Tools

Tool kit, general mechanic's (Item 50, WP 0306 00)

Equipment Condition

Master battery switch in OFF position (TM 9-2320-302-10)

References

TM 9-2320-302-10

REMOVAL

1. Remove two screws (3), cover (4), and control module (5) from dashboard.
2. Remove plug (1) from control module (4).
3. Remove buzzer alarm (2) from control module (5).

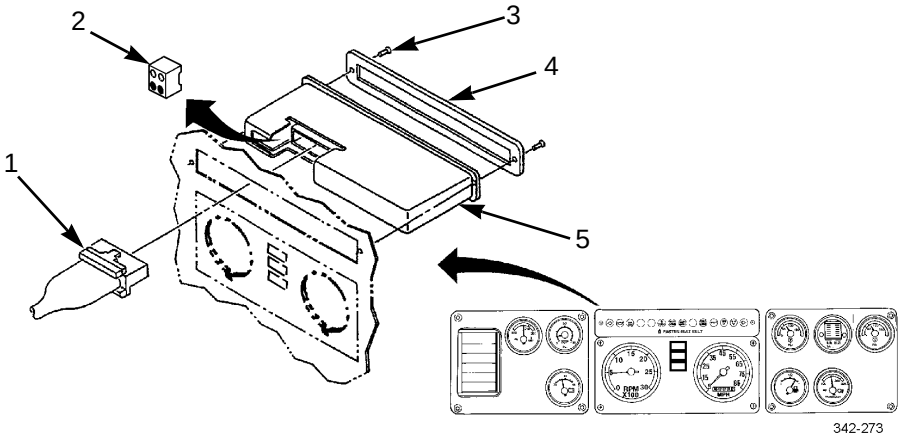

INSTALLATION

NOTE

Observe keyways and guide pins on plug when making connection. DO NOT force connection.

1. Install buzzer alarm (2) on control module (5).
2. Install plug (1) on control module (5).
3. Position control module (5) on dashboard and install cover (4) with two screws (3).
4. Start vehicle and check control module lights (TM 9-2320-302-10).

END OF WORK PACKAGE

HEATER AND AIR CONDITIONING CONTROL PANEL REPLACEMENT 0080 00

THIS WORK PACKAGE COVERS

Removal, Installation

INITIAL SETUP

Tools and Special Tools

Tool kit, general mechanic's (Item 50, WP 0306 00)

Materials/Parts

Compound, sealing, pipe (Item 13, WP 0305 00)

Tags, marker (Item 34, WP 0305 00)

Equipment Condition

Air system drained (TM 9-2320-302-10)

Master battery switch in OFF position (TM 9-2320-302-10)

References

TM 9-2320-302-10

REMOVAL

1. Remove two heater control knobs (3) and six screws (1). Pull control panel (2) out from dashboard.
2. Remove fiber optic labels (13).

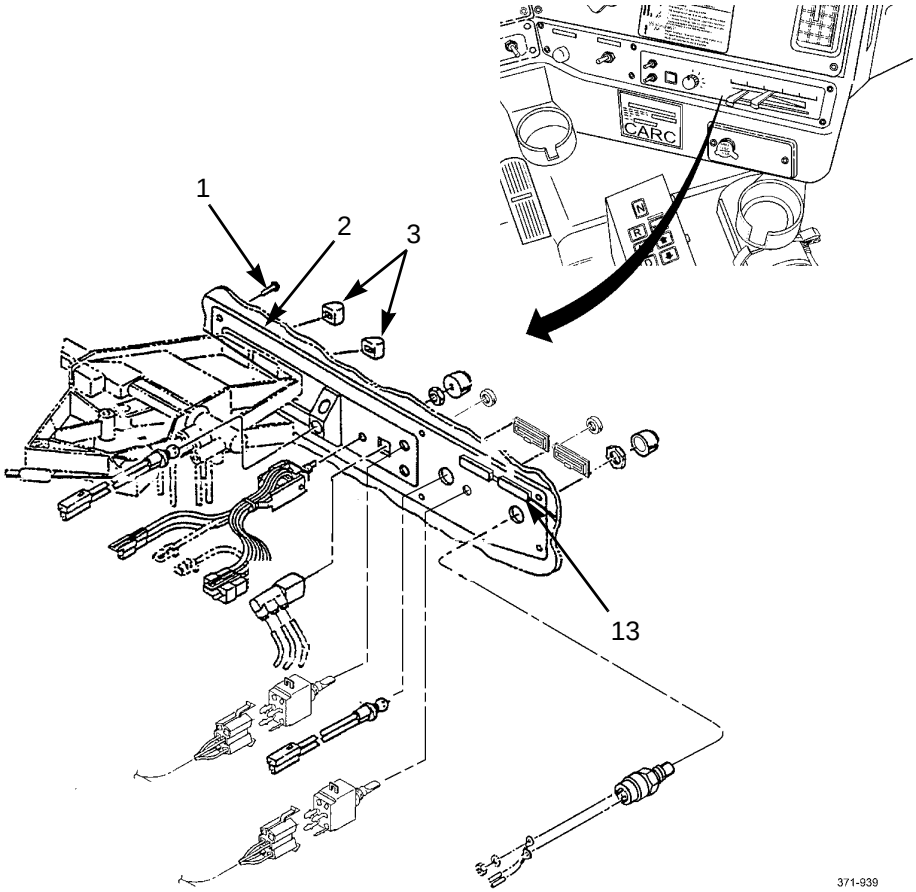

REMOVAL - CONTINUED

NOTE

Tag tubes and wire connectors prior to removal to aid in installation.

3. Remove two nuts (17), two washers (16), and two terminal lugs (15) from switch (14).
4. Loosen two setscrews (10) and remove knob (11), nut (12), and switch (14) from control panel (2).
5. Disconnect six connectors (19).
6. Remove nut (9) and mirror heat switch (18) from control panel (2).

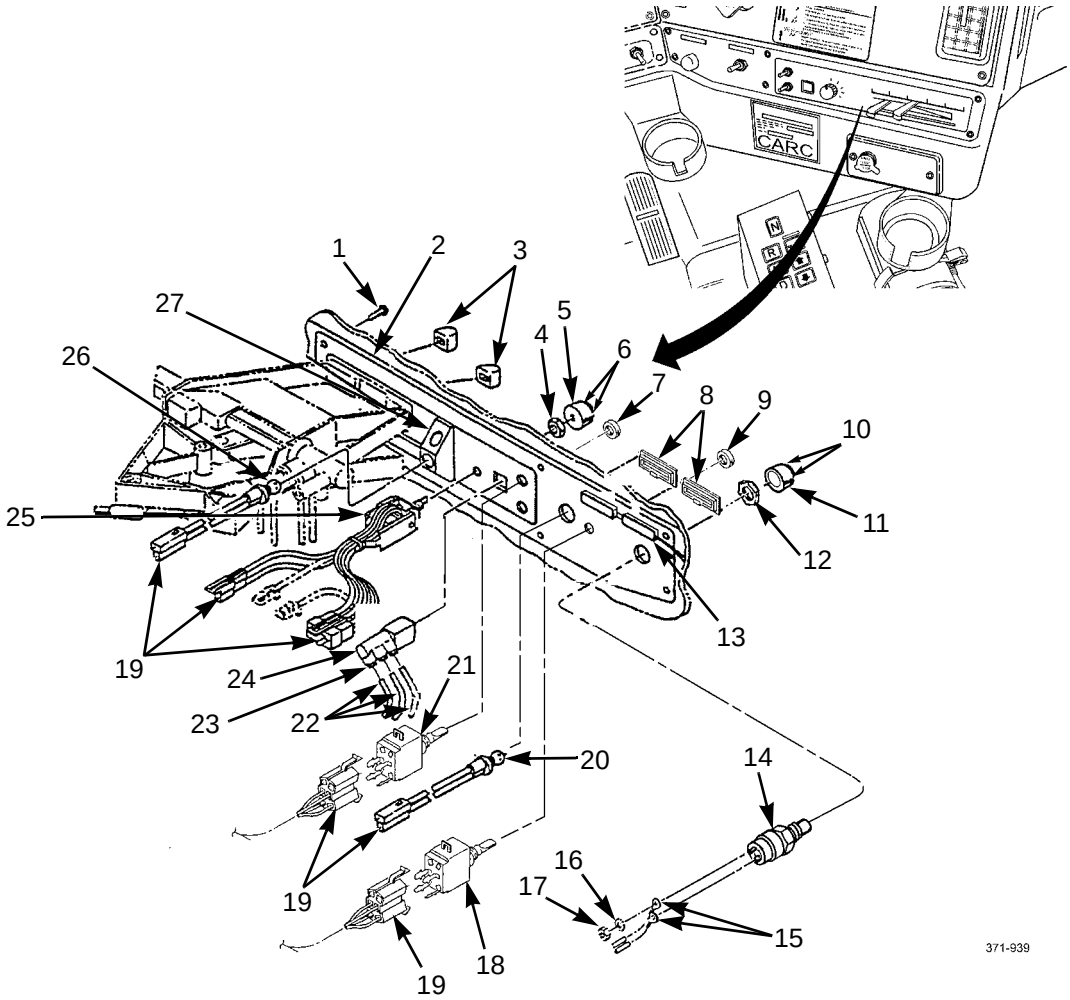

7. Remove heater indicator light (20).
8. Remove two nuts (7) and auxiliary heater switches (21).
9. Press three plastic discs (23) and disconnect three tubes (22) from air switch (24).
10. Remove air switch (24).
11. Loosen two setscrews (6) and remove knob (5), nut (4), and fan speed switch (25).
12. Remove indicator light (26).

REMOVAL - CONTINUED

13. Remove ac/heater panel (27) and two label holders (8) from control panel (2).

INSTALLATION

1. Install two label holders (8) and ac/heater panel (27) to control panel (2).
2. Install indicator light (26).
3. Install fan speed switch (25), nut (4), and knob (5). Tighten two setscrews (6).
4. Install air switch (24).
5. Press three plastic discs (23) and connect three tubes (22) to air switch (24).
6. Install two auxiliary heater switches (21) with two nuts (7).
7. Install heater indicator light (20).
8. Install mirror heat switch (18) with nut (9).
9. Connect six connectors (19).
10. Install switch (14), nut (12), and knob (11). Tighten two setscrews (10).
11. Install two terminal lugs (15), two washers (16), and two nuts (17) on switch (14).
12. Install fiber optic labels (13).
13. Install control panel (2) to dashboard with six screws (1). Install two heater control knobs (3).
14. Start vehicle and check all control panel functions (TM 9-2320-302-10).

END OF WORK PACKAGE

12V POWER RECEPTACLE REPLACEMENT (M915A3 OLD MODEL) 0081 00

THIS WORK PACKAGE COVERS

Removal, Installation

INITIAL SETUP

Tools and Special Tools

Tool kit, general mechanic's (Item 50, WP 0306 00)

Equipment Condition

Master battery switch in OFF position (TM 9-2320-302-10)

REMOVAL

1. Remove wiring harness connector (1) from 12V power receptacle (2).
2. Remove 12V power receptacle (2) from cap assembly (3).
3. Remove cap assembly (3) from auxiliary panel (4).

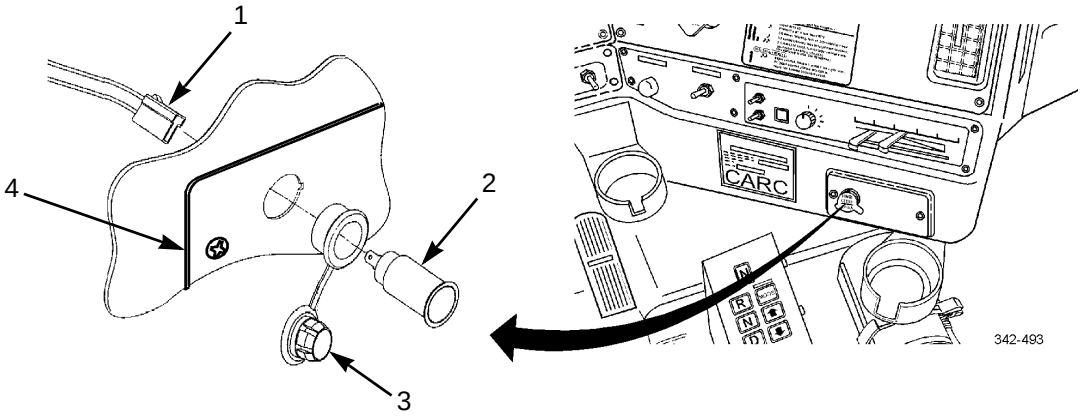

INSTALLATION

1. Install cap assembly (3) on auxiliary panel (4).
2. Install 12V power receptacle (2) on cap assembly (3).
3. Install wiring harness connector (1) on 12V power receptacle (2).

END OF WORK PACKAGE

FIBER OPTIC LIGHT SOURCE REPLACEMENT 0082 00

THIS WORK PACKAGE COVERS

Removal, Installation

INITIAL SETUP

Tools and Special Tools

Tool kit, general mechanic's (Item 50, WP 0306 00)

Wrench set, socket attachment (Item 61, WP 0306 00)

Materials/Parts

Straps, tiedown (Item 33, WP 0305 00)

Equipment Condition

Center gage panel removed (WP 0074 00)

REMOVAL

1. Remove nut (1), torx screw (2), and fiber optic light source (6).
2. Turn light socket (4) to left and remove from fiber optic light source (6).
3. Remove tiedown strap (5) and discard.

CAUTION

Do not crimp fiber optic lines. Crimping could cause lines to break internally, resulting in instrument light failure.

4. Release two latches (3) on rear of fiber optic light source (6) and remove four fiber optic lines (7).

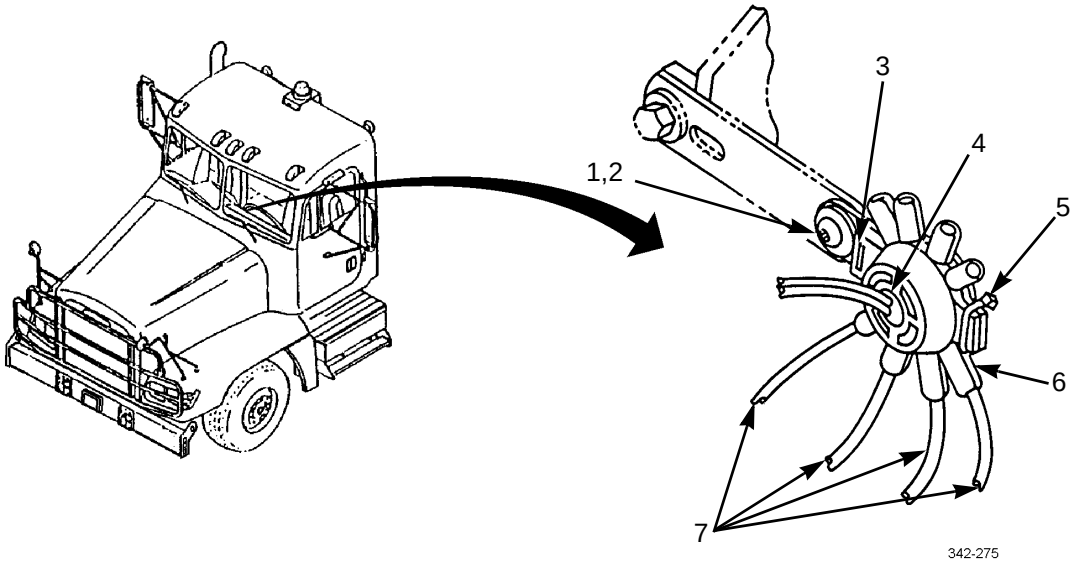

INSTALLATION

CAUTION

Do not crimp fiber optic lines. Crimping could cause lines to break internally, resulting in instrument light failure.

1. Position four fiber optic lines (7) on rear of fiber optic light source (6) and engage two latches (3).
2. Install new tiedown strap (5).
3. Install light socket (4) on fiber optic light source (6) and turn light socket to right.
4. Install fiber optic light source (6) with torx screw (2) and nut (1).

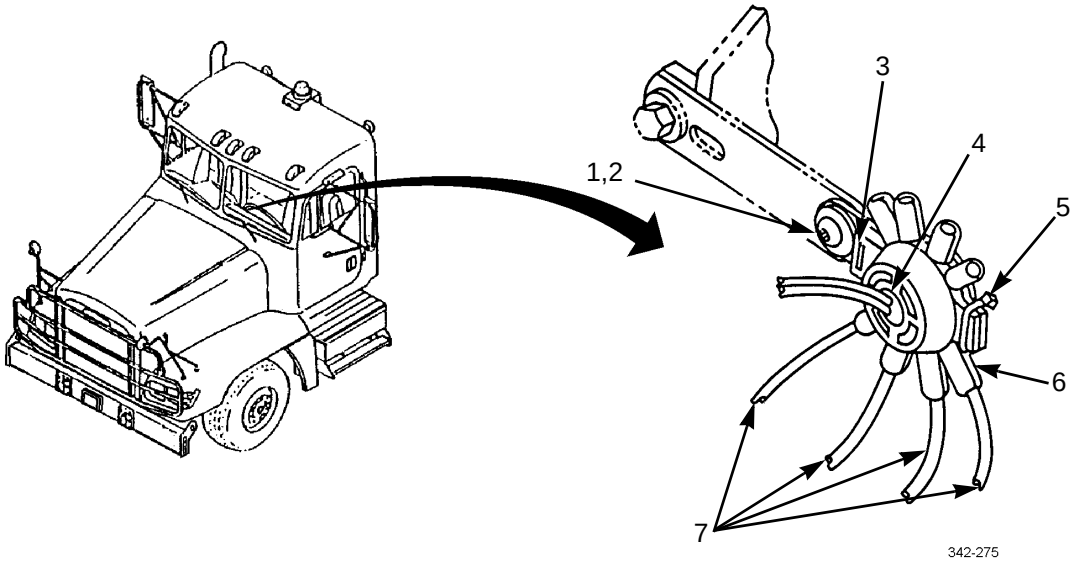

5. Install center gage panel (WP 0074 00).

END OF WORK PACKAGE

CHECK ENGINE SWITCH REPLACEMENT 0083 00

THIS WORK PACKAGE COVERS

Removal, Installation

INITIAL SETUP

Tools and Special Tools

Tool kit, general mechanic's (Item 50, WP 0306 00)

Materials/ Parts

Tags, marker (Item 33, WP 0305 00)

Equipment Condition

Master battery switch in OFF position (TM 9-2320-302-10)

REMOVAL

1. Remove three screws (1) and washers (2) to separate lower dash cover (3) from dashboard.
2. Pull lower dash cover (3) downward for access to rear of lower dash cover.

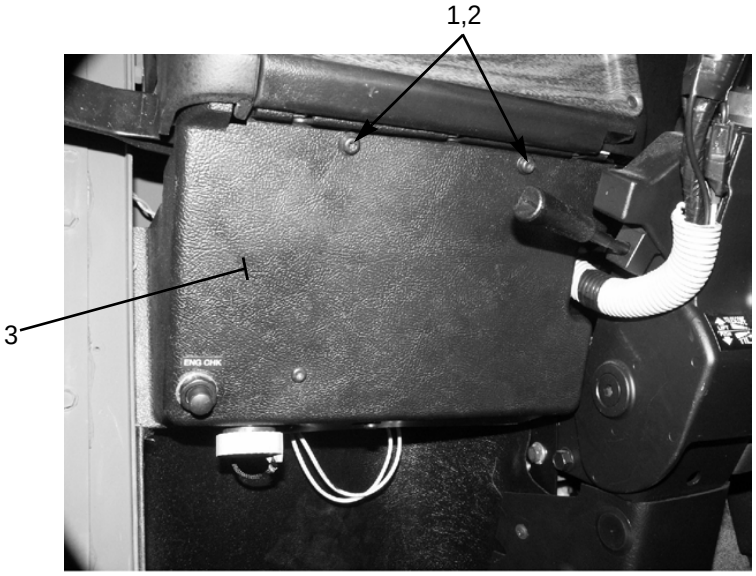

371-137

REMOVAL - CONTINUED

NOTE

Tag wires to aid in installation.

3. Remove two nuts (5) and disconnect two wires (4) from rear of check engine switch (6).
4. Remove plastic nut (7), lockwasher (8), and check engine switch (6) from lower dash cover (3).

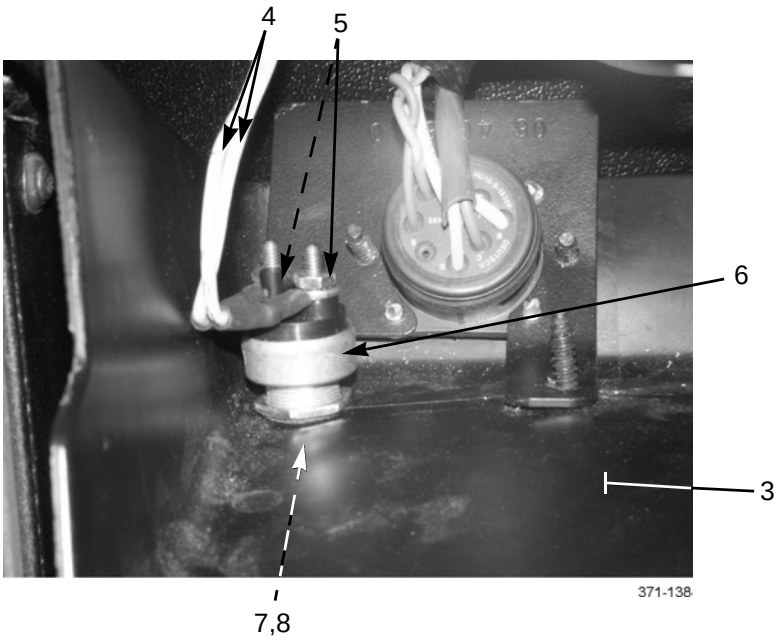

INSTALLATION

1. Install check engine switch (6) to lower dash cover (3) with lockwasher (8) and plastic nut (7).
2. Connect two wires (4) to rear of check engine switch (6) with two nuts (4).
3. Position lower dash cover (3) to dashboard.
4. Install lower dash cover (3) to dashboard with three washers (2) and screws (1).

INSTALLATION - CONTINUED

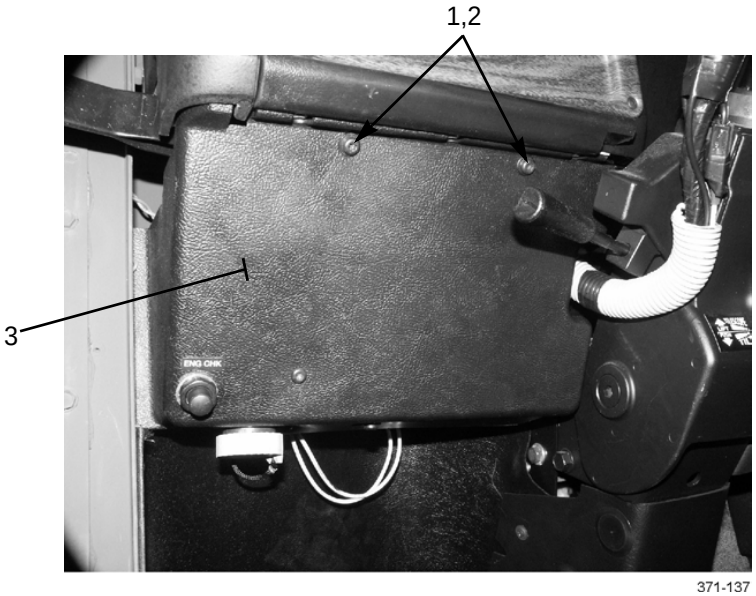

371-137

END OF WORK PACKAGE

FUSE, RELAY, CIRCUIT BREAKER, AND HOLDER REPLACEMENT 0084 00

THIS WORK PACKAGE COVERS

Fuse Removal, Relay Removal, Circuit Breaker Removal, Holder Removal, Holder Installation, Circuit Breaker Installation, Relay Installation, Fuse Installation

INITIAL SETUP

Tools and Special Tools

Tool kit, general mechanic's (Item 50, WP 0306 00)

Materials/Parts

Tags, marker (Item 34, WP 0305 00)

Equipment Condition

Master battery switch in OFF position (TM 9-2320-302-10)

NOTE

- For identification of fuses, relays, and circuit breakers, refer to page 0084 00-4 or 0084 00-5.
- Tag or note position of all fuses, relays, circuit breakers, and connectors to aid in installation.

FUSE REMOVAL

1. Rotate three turnlock fasteners (1) and remove cover (2) from cab.

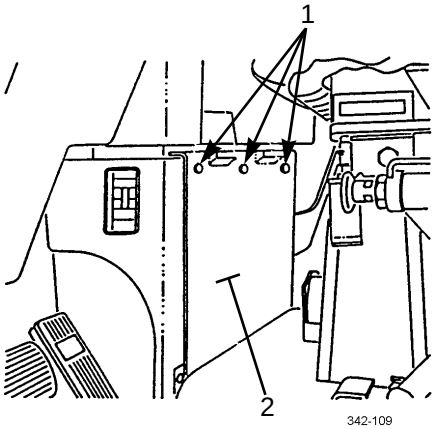

2. Remove fuses (4) from holder (3).

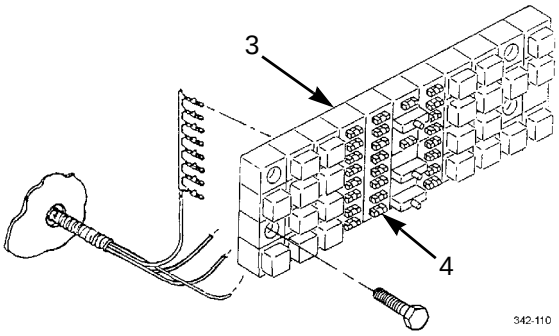

RELAY REMOVAL

Remove relays (6) from holder (3).

CIRCUIT BREAKER REMOVAL

Remove circuit breakers (7) from holder (3).

HOLDER REMOVAL

1. Remove four screws (8) and holder (3) from cab.
2. Remove connectors (5) from holder (3).

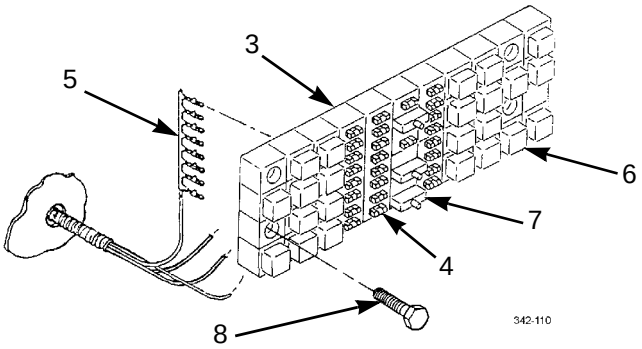

HOLDER INSTALLATION

1. Install connectors (5) on holder (3).
2. Install holder (3) on cab with four screws (8).

CIRCUIT BREAKER INSTALLATION

Install circuit breakers (7) on holder (3).

RELAY INSTALLATION

Install relays (6) on holder (3).

FUSE INSTALLATION

WARNING

When replacing fuses, ensure that replacement fuses are correct amperage. Fuses with incorrect amperage could result in injury to personnel or damage to equipment.

1. Install fuses (4) on holder (3).

FUSE INSTALLATION - CONTINUED

2. Position cover (2) in cab and rotate three turnlock fasteners (1).

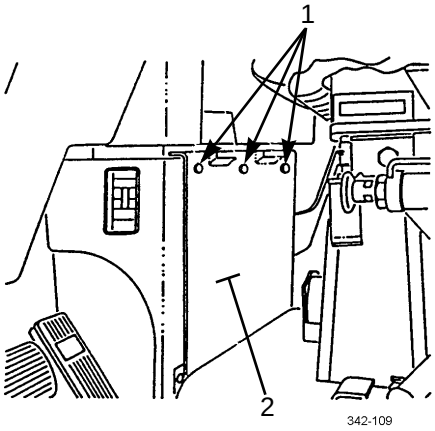

FUSE INSTALLATION - CONTINUED

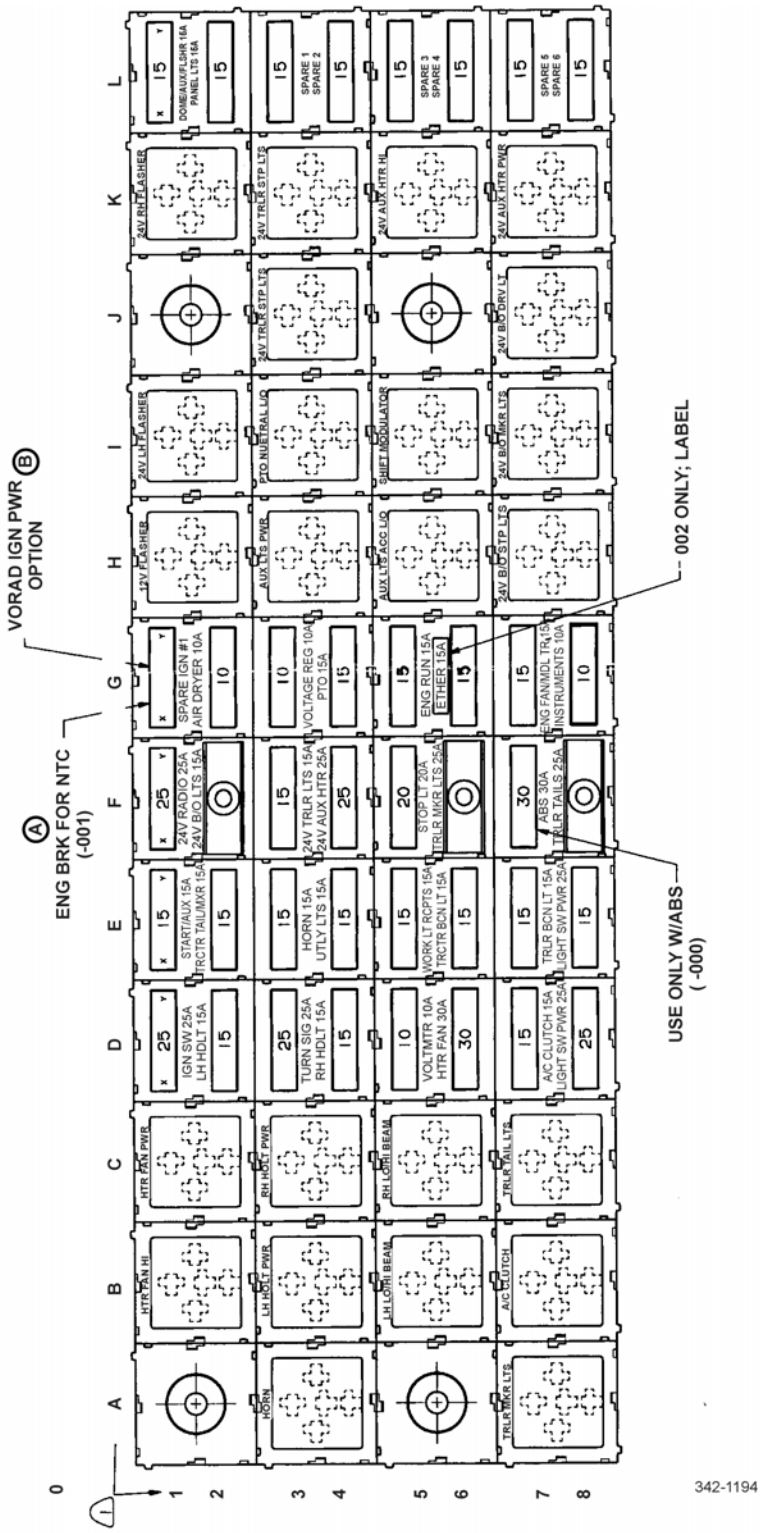

M915A3 OLD MODEL

FUSE, RELAY, CIRCUIT BREAKER, AND HOLDER REPLACEMENT - CONTINUED 0084 00

FUSE INSTALLATION - CONTINUED

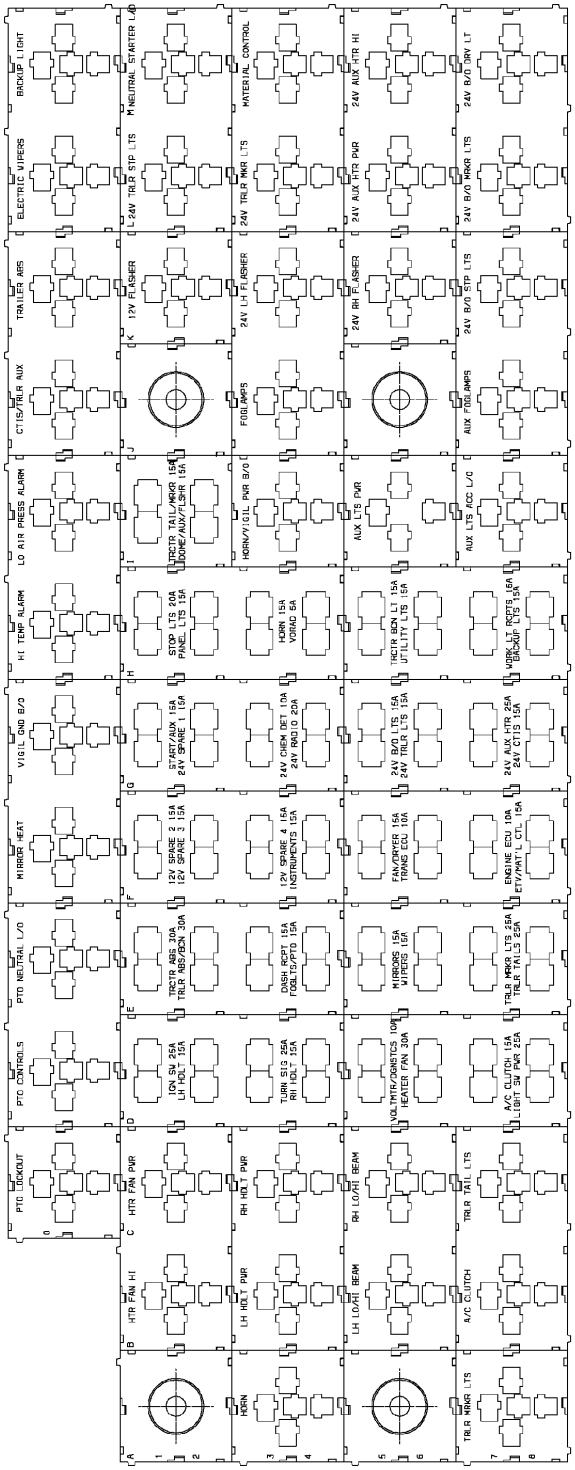

M915A3 NEW MODEL, M916A3, M917A2

END OF WORK PACKAGE

ENGINE AND TRANSMISSION ECU FUSES AND WIRES REPLACEMENT 0085 00

THIS WORK PACKAGE COVERS

Fuse Replacement; Engine ECU Fuse Wire: Removal, Installation; Transmission ECU Fuse Wire: Removal, Installation

INITIAL SETUP

Tools and Special Tools

Tool kit, general mechanic's (Item 50, WP 0306 00)

Wrench, torque, 0-300 lb-in (Item 56, WP 0306 00)

Materials/Parts

Straps, tiedown (Item 33, WP 0305 00)

Tags, marker (Item 34, WP 0305 00)

Tape, insulation, electrical (Item 37, WP 0305 00)

Equipment Condition

Master battery switch in OFF position (TM 9-2320-302-10)

Battery box cover removed (TM 9-2320-302-10)

FUSE REPLACEMENT

NOTE

- Engine ECU 15-amp fuse and transmission ECU 15-amp fuse are located inside the battery box and are replaced the same way.
- Note amperage of fuse to ensure correct installation.

1. Remove fuse cover (1) from fuse connector (2) of ECU fuse wire (3).

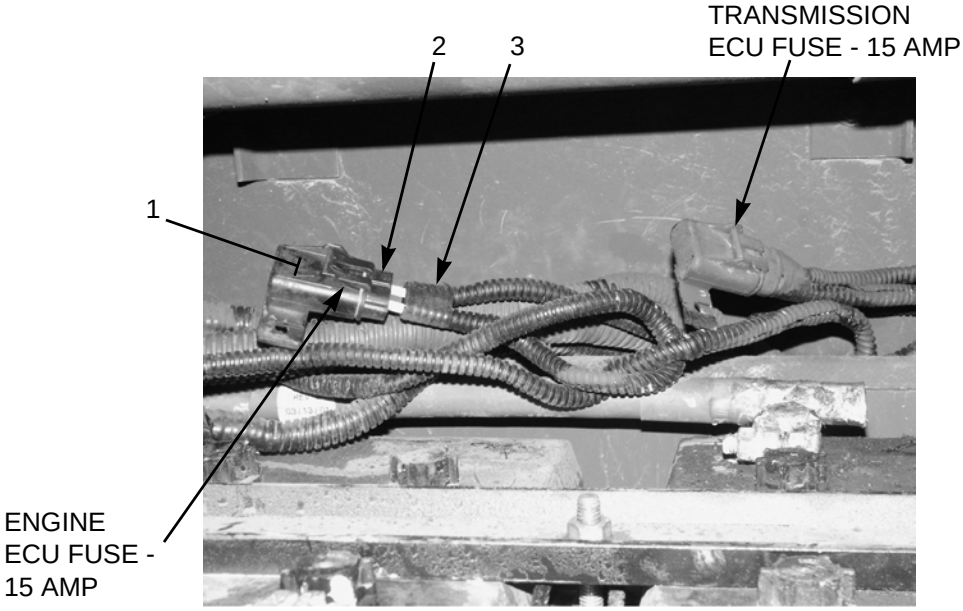

371-140

FUSE REPLACEMENT - CONTINUED

2. Remove fuse (4) from fuse connector (2).

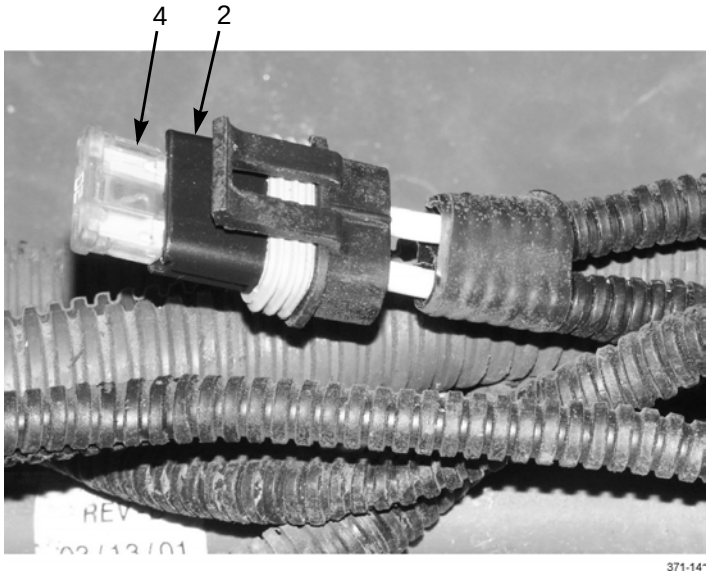

3. Install new fuse (4) into fuse connector (2).
4. Install fuse cover (1) to fuse connector (2).

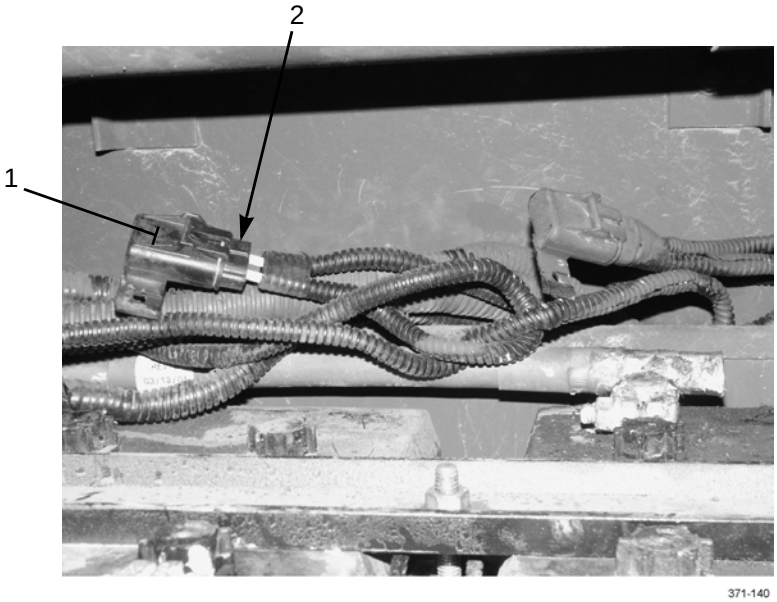

5. Install battery box cover (TM 9-2320-302-10).

ENGINE ECU FUSE WIRE REMOVAL

NOTE

- Remove and discard tiedown straps and electrical tape as necessary.
- Tag wires to ensure correct installation.
- Battery cable, battery equalizer ground cable, and a wire will remain attached to negative battery cable.

1. Lift cap (5) and remove nut (7) and two wires of engine ECU fuse wire (8) from negative battery cable (6).

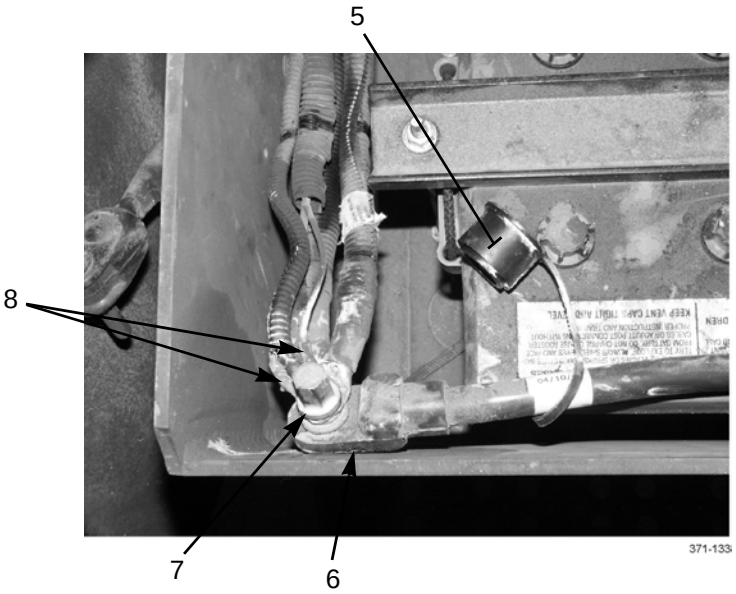

ENGINE ECU FUSE WIRE REMOVAL - CONTINUED

NOTE

- Battery equalizer on M916A3 and M917A2 vehicles is mounted with three terminals facing FRONT of vehicle. Terminals on M915A3 (New Model) face REAR of vehicle. M915A3 (New Model) is shown.
- Equalizer cable, to master battery switch, will remain attached to 24V terminal.

2. At battery equalizer (11), remove nut (9), lockwasher (10), and engine ECU fuse wire (8) from 24V terminal.

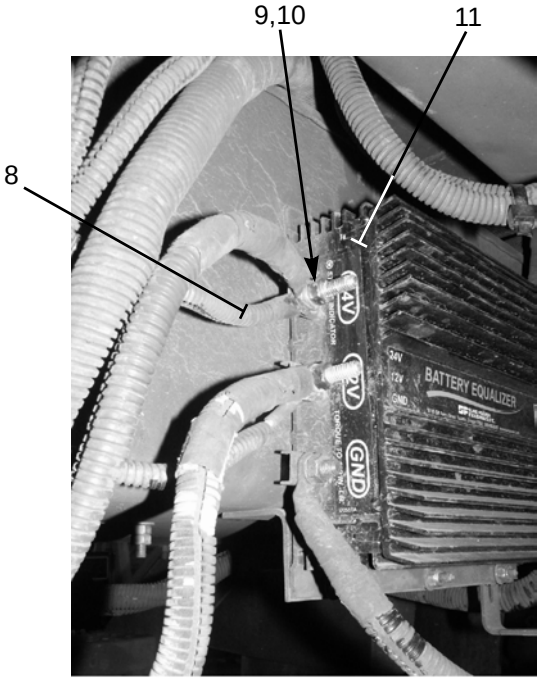

3. At engine ECU (14), disconnect connector (13) of engine ECU fuse wire (8) from upper connector of engine ECU.
4. Disconnect connector (12) of engine ECU fuse wire (8) from connector of chassis wiring harness (15).
5. Remove engine ECU fuse wire (8) from vehicle.
6. Remove conduit from engine ECU fuse wire (8).

ENGINE ECU FUSE WIRE REMOVAL - CONTINUED

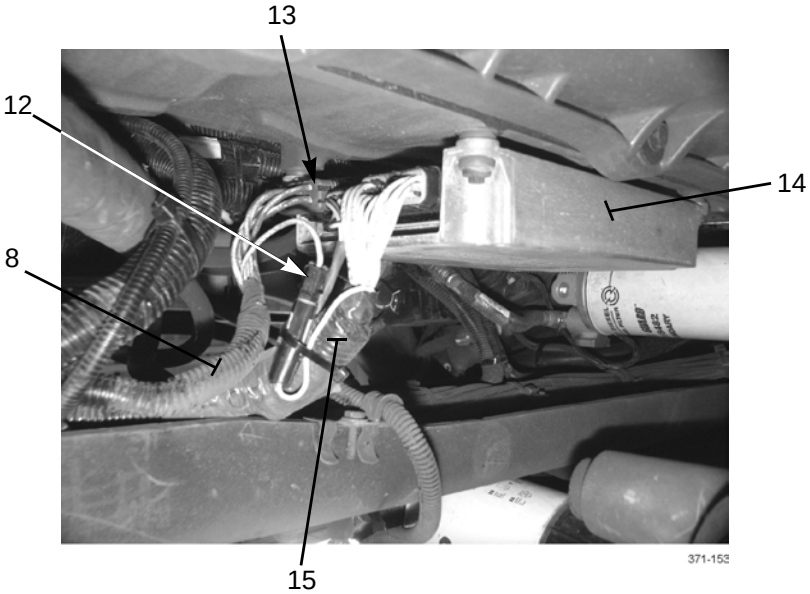

ENGINE ECU FUSE WIRE INSTALLATION

NOTE

Install new tiedown straps and electrical tape as necessary.

1. Install conduit to engine ECU fuse wire (8).
2. Position engine ECU fuse wire (8) to vehicle.
3. At engine ECU (14), connect connector (12) of engine ECU fuse wire (8) to connector of chassis wiring harness (15).
4. Connect connector (13) of engine ECU fuse wire (8) to upper connector of engine ECU (14).
5. At battery equalizer (11), install engine ECU fuse wire (8) to 24V terminal with lockwasher (10) and nut (9). Tighten nut to 110 lb-in (12.4 Nm).
6. Install two wires of engine ECU fuse wire (8) to negative battery cable (6) with nut (7). Install cap (5).
7. Install battery box cover (TM 9-2320-302-10).

TRANSMISSION ECU FUSE WIRE REMOVAL

NOTE

- Remove and discard tiedown straps and electrical tape as necessary.
- Tag wires to aid in installation.
- Battery cable, battery equalizer ground cable, and two wires will remain attached to negative battery cable.

1. Lift cap (5) and remove nut (7) and wire of transmission ECU fuse wire (16) from negative battery cable (6).

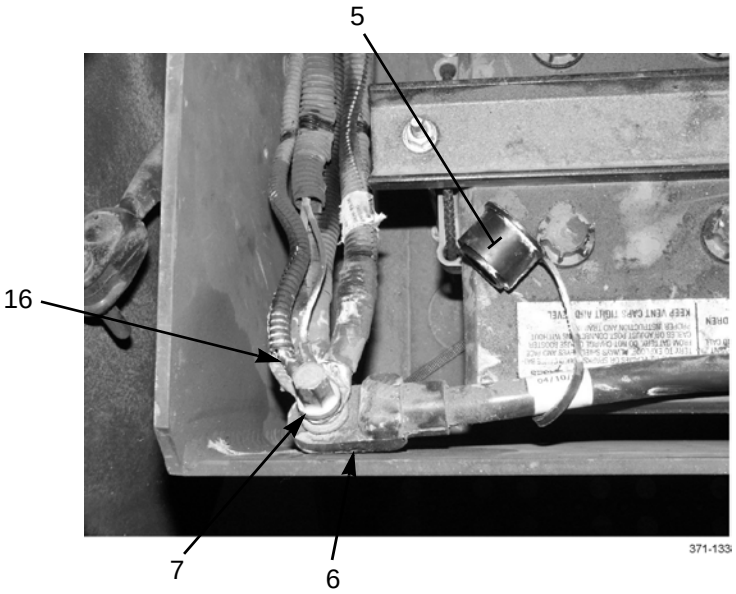

NOTE

- Battery equalizer on M916A3 and M917A2 vehicles is mounted with three terminals facing FRONT of vehicle. Terminals on M915A3 New Model face REAR of vehicle. M915A3 New Model is shown.
- Equalizer cable, to master battery switch, will remain attached to 12V terminal.

2. At battery equalizer (11), remove nut (17), lockwasher (18), and transmission ECU fuse wire (16) from 12V terminal.

TRANSMISSION ECU FUSE WIRE REMOVAL - CONTINUED

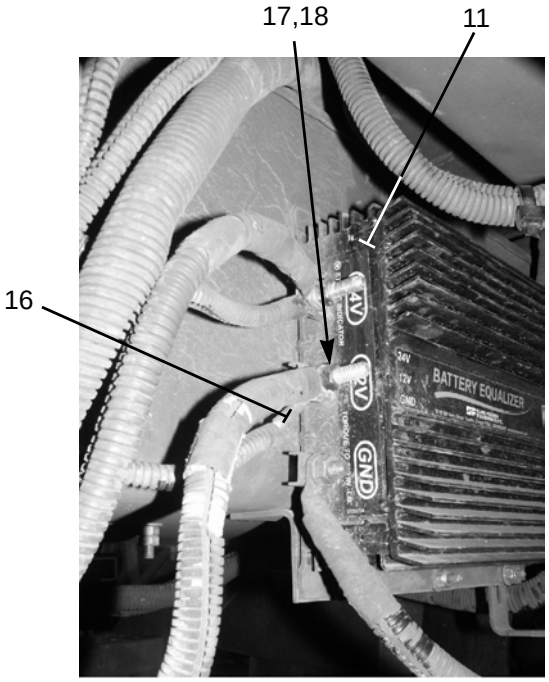

3. At transmission wiring harness (19), disconnect connector (20) of transmission ECU fuse wire (16) from connector of transmission wiring harness.
4. Remove transmission ECU fuse wire (16) from vehicle.
5. Remove conduit from transmission ECU fuse wire (16).

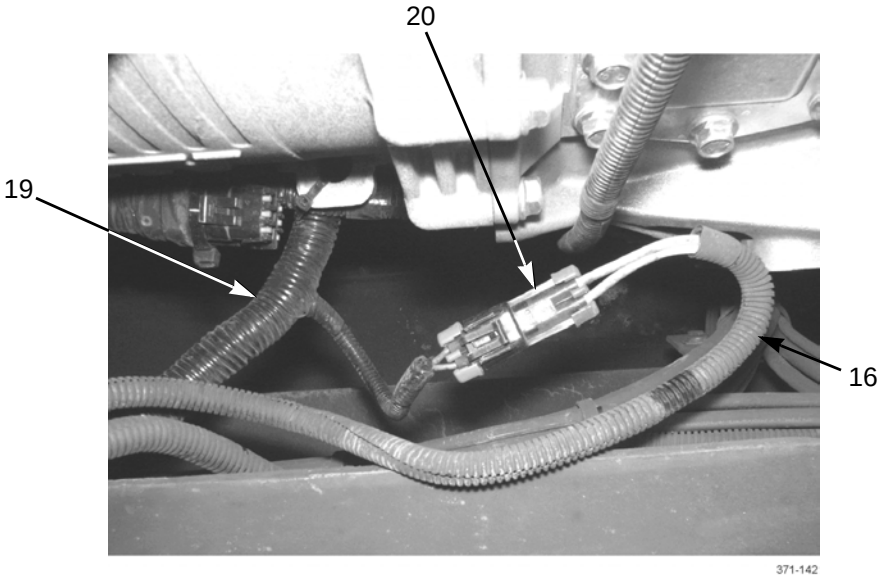

TRANSMISSION ECU FUSE WIRE INSTALLATION

NOTE

Install new tiedown straps and electrical tape as necessary.

1. Install conduit to transmission ECU fuse wire (16).
2. Position transmission ECU fuse wire (16) to vehicle.
3. At transmission wiring harness (19), connect connector (20) of transmission ECU fuse wire (16) to connector of transmission wiring harness.

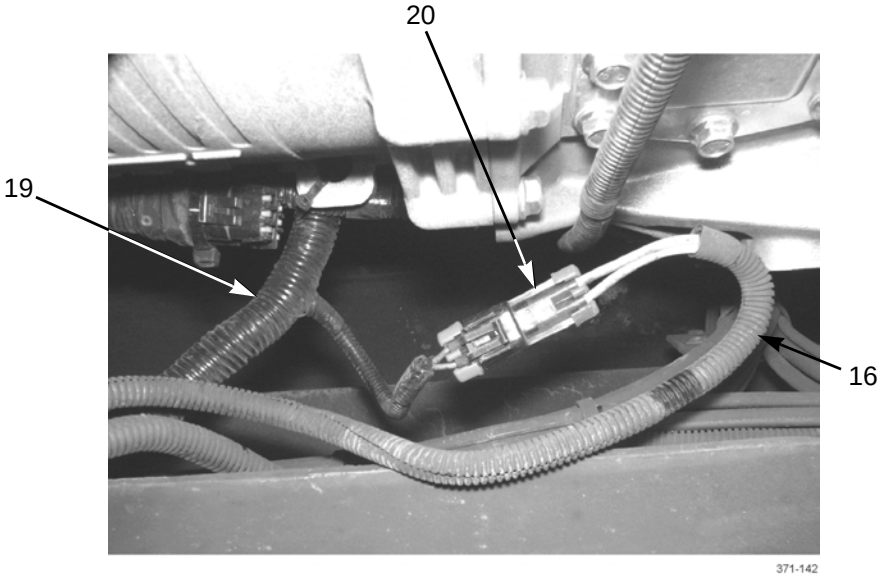

4. At battery equalizer (11), install transmission ECU fuse wire (16) to 12V terminal with lockwasher (18) and nut (17). Tighten nut to 110 lb-in (12.4 Nm).

TRANSMISSION ECU FUSE WIRE INSTALLATION - CONTINUED

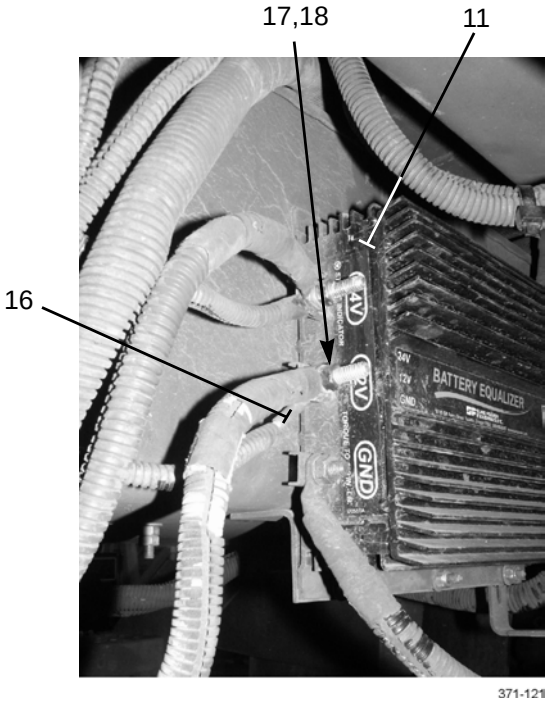

5. Install wire of transmission ECU fuse wire (16) to negative battery cable (6) with nut (7). Install cap (5).

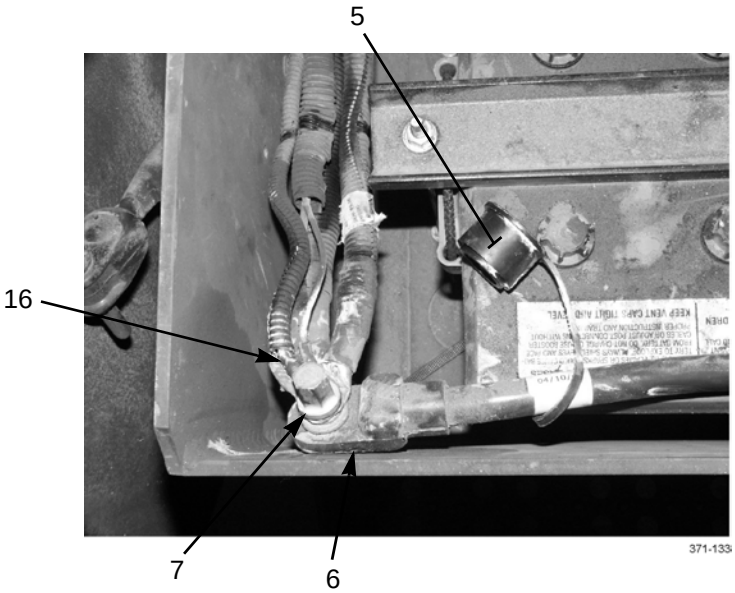

6. Install battery box cover (TM 9-2320-302-10).

END OF WORK PACKAGE

MASTER BATTERY SWITCH REPLACEMENT 0086 00

THIS WORK PACKAGE COVERS

Removal, Installation

INITIAL SETUP

Tools and Special Tools

Tool kit, general mechanic's (Item 50, WP 0306 00)

Materials/Parts

Tags, marker (Item 34, WP 0305 00)

Nut, lock (P/N M45913/1-4CG5C) (6)

Washer, lock (P/N MS35338-48) (4)

Washer, lock (P/N 23-00702-025) (2)

References

TM 9-2320-302 -10

Equipment Condition

Battery cables disconnected (WP 0145 00 or WP 0146 00)

NOTE

Master battery switch is located at FRONT of battery box on M916A3 and M917A2 vehicles and at REAR of battery box on M915A3 vehicles. Each is replaced the same way. M915A3 (New Model) is shown.

REMOVAL

1. Rotate knob (1) at upper and lower covers (3) of master battery switch (4) and remove two knobs, lockwashers (2), and covers. Discard lockwashers.

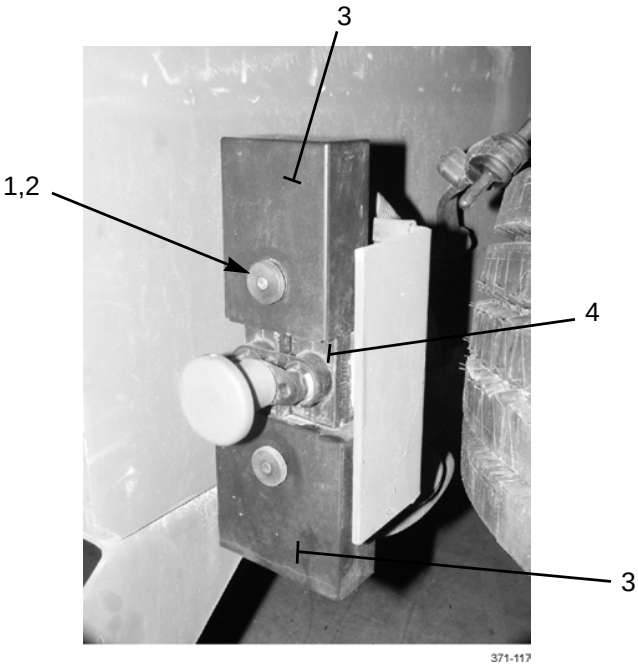

REMOVAL - CONTINUED

NOTE

- Tag cables to ensure correct installation.
- Each terminal at bottom of master battery switch has TWO cables attached.

2. Remove four nuts (5), lockwashers (6), and six cables (8) from four screws (7) at terminals of master battery switch (4). Discard lockwashers.

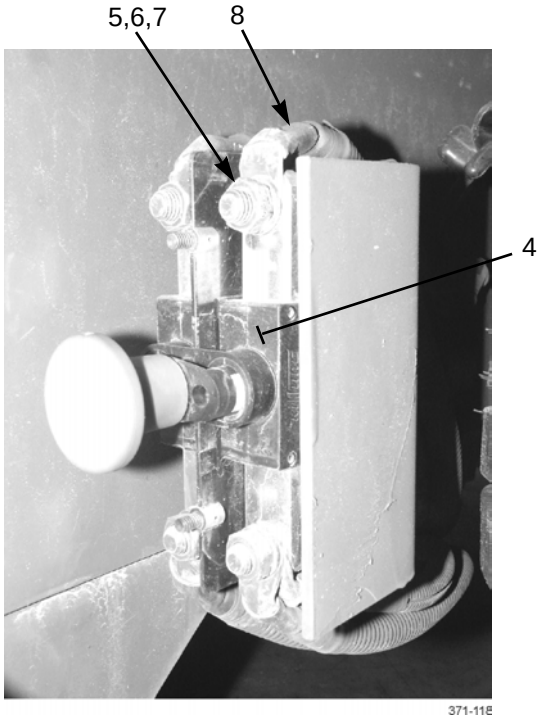

NOTE

Note position of master battery switch for installation.

3. Remove four locknuts (13), eight washers (14), four screws (15), master battery switch (4), and four screws (7) from bracket (16). Discard locknuts.

NOTE

Perform steps 4 through 6 to remove bracket.

4. Remove two insulators (17) from bracket (16).
5. Remove cover from battery box (TM 9-2320-302-10).
6. Remove two locknuts (9), four washers (10), two screws (11), and bracket (16) from side of battery box (12). Discard locknuts.

REMOVAL - CONTINUED

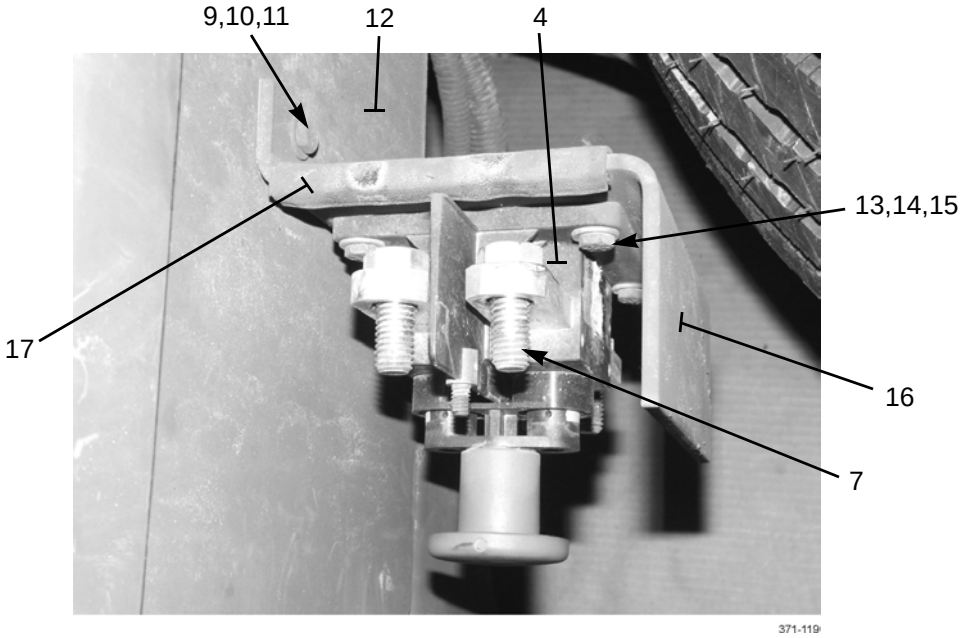

INSTALLATION

NOTE

Perform steps 1 through 3 to install bracket.

1. Install bracket (16) to side of battery box (12) with two screws (11), four washers (10), and two new locknuts (9).
2. Install cover to battery box (TM 9-2320-302-10).
3. Install two insulators (17) to bracket (16).
4. Position four screws (7) through rear of master battery switch (4). Install master battery switch to bracket (16) with four screws (15), eight washers (14), and four new locknuts (13).
5. Install six cables (8) to terminals of master battery switch (4) with four new lockwashers (6) and nuts (5) on screws (7).

INSTALLATION - CONTINUED

6. Install two covers (3) to master battery switch (4) with two new lockwashers (2) and knobs (1).

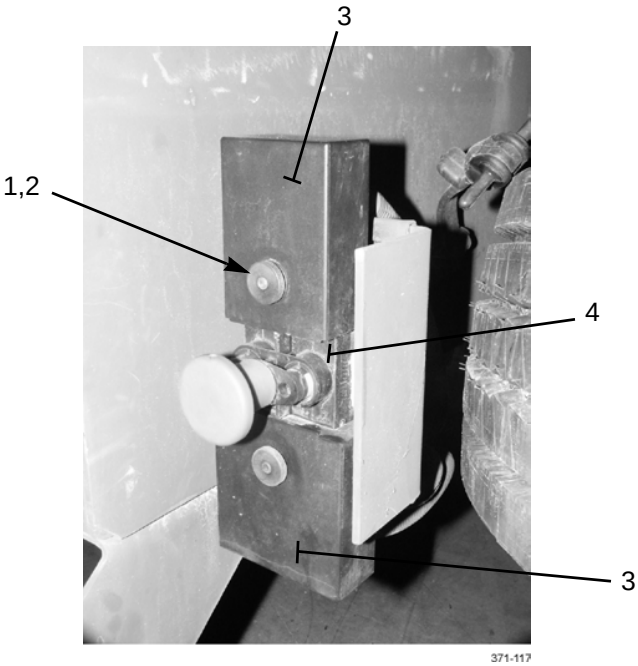

7. Install battery cables (WP 0145 00 or WP 0146 00).

END OF WORK PACKAGE

TURN SIGNAL SWITCH REPLACEMENT 0087 00

THIS WORK PACKAGE COVERS

Removal, Installation

INITIAL SETUP

Tools and Special Tools

Tool kit, general mechanic's (Item 50, WP 0306 00)

Materials/Parts

Tape, electrical (Item 37, WP 0305 00)

Equipment Condition

Master battery switch in OFF position (TM 9-2320-302-10)

REMOVAL

1. Remove electrical tape (1) from cable (8) and cover (2).
2. On cover (2), remove screw (6) and clip (7).
3. Slide cover (2) onto cable (8) and unplug cable connector (5) from turn signal assembly (3).
4. Remove clamp (4) and turn signal assembly (3) from steering column.

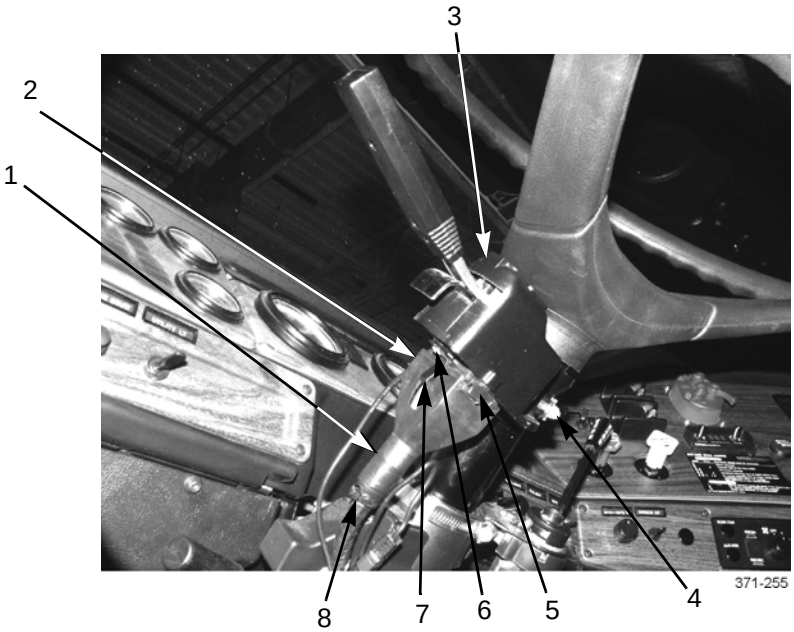

INSTALLATION

1. Position clamp (4) and turn signal assembly (3) onto steering column. Tighten clamp.
2. Plug cable connector (5) into turn signal assembly (3).
3. Slide cover (2) over cable connector (5) and install clip (7) and screw (6).
4. Install electrical tape (1) onto cable (8) and cover (2).

END OF WORK PACKAGE

ELECTRONIC THROTTLE REPLACEMENT 0088 00

THIS WORK PACKAGE COVERS

Removal, Installation

INITIAL SETUP

Tools and Special Tools

Tool kit, general mechanic's (Item 50, WP 0306 00)

Materials/Parts

Nut, lock (M45913/1-4CG5C) (3)

Equipment Conditions

Master battery switch in OFF position (TM 9-2320-302-10)

REMOVAL

1. Remove screw (5) and clamp (6) from cable (4).
2. Unplug cable (4) from connector on electronic throttle (1).
3. Remove three locknuts (3), washers (2), and electronic throttle (1) from vehicle. Discard locknuts.

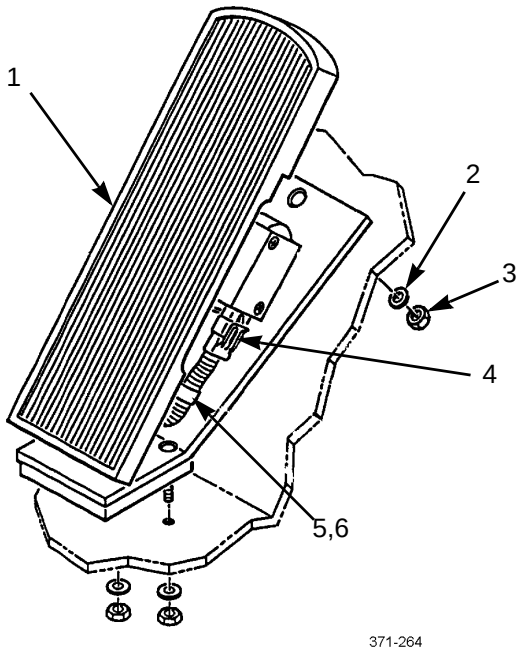

INSTALLATION

1. Install electronic throttle (1), washers (2), and three new locknuts (3).
2. Plug cable (4) into connector on electronic throttle control (1).
3. Install clamp (6) and screw (5) on cable (4).

END OF WORK PACKAGE

ELECTRONIC CONTROL MODULE REPLACEMENT 0089 00

THIS WORK PACKAGE COVERS

Removal, Installation

INITIAL SETUP

Tools and Special Tools

Tool kit, general mechanic's (Item 50, WP 0306 00)

Materials/Parts

Tags, marker (Item 34, WP 0305 00)

Equipment Condition

Master battery switch in OFF position (TM 9-2320-302-10)

NOTE

Tag all connectors to aid in installation.

REMOVAL

1. On each side of electronic control module (5), loosen one screw (6) and unplug three connectors (1).
2. Remove four bolts (2), electronic control module (5), four isolators (3), and spacers (4) from engine.
3. Remove four isolators (3) from bolts (2).

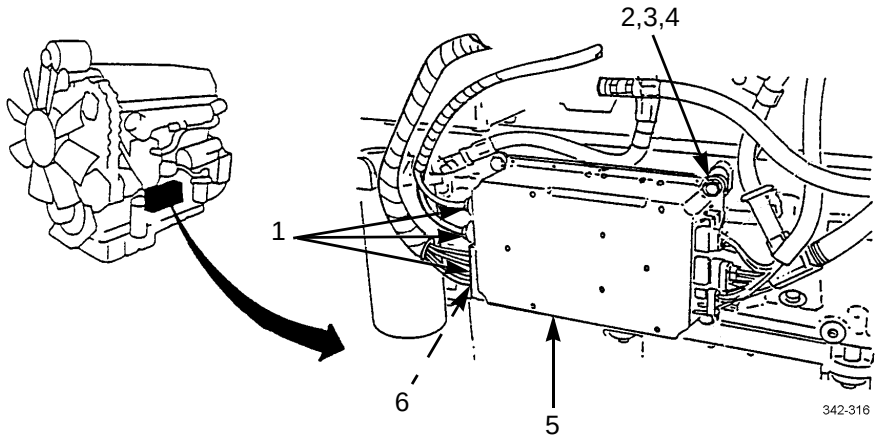

INSTALLATION

1. Install four isolators (3) on bolts (2).
2. Install four spacers (4), isolators (3), and electronic control module (5) on engine with four bolts (2).
3. On each side of electronic control module (5), connect three connectors (1) and install one screw (6).

END OF WORK PACKAGE

NATO SLAVE RECEPTACLE REPLACEMENT 0090 00

THIS WORK PACKAGE COVERS

Removal, Installation

INITIAL SETUP

Tools and Special Tools

Tool kit, general mechanic's (Item 50, WP 0306 00)

Materials/Parts

Nut, lock (P/N 23-09336-005) (4)

Tags, marker (Item 34, WP 0305 00)

References

WP 0143 00

Equipment Condition

Battery cables disconnected (WP 0145 00 or WP 0146 00)

NOTE

Tag cables prior to removal to aid in installation.

REMOVAL

1. Remove two screws (4), lockwashers (3), and cables (2) from NATO slave receptacle (5).
2. Remove four locknuts (9), washers (8), screws (6), cap (7) and NATO slave receptacle (5) from angle bracket (1). Discard locknuts.

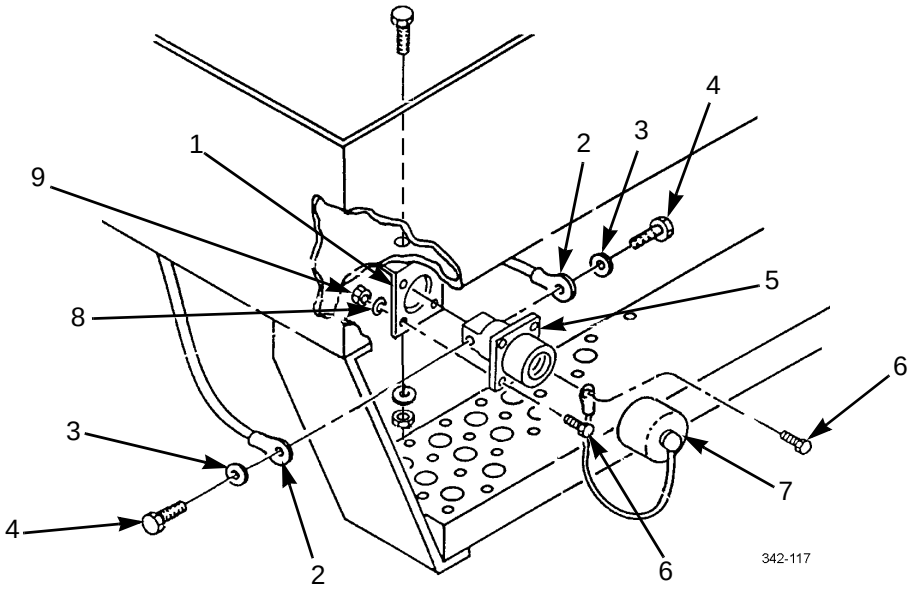

REMOVAL - CONTINUED

NOTE

Perform steps 3 and 4 only if angle bracket is damaged.

3. Remove batteries (WP 0143 00).
4. Remove three nuts (13), washers (12), screws (10), and angle bracket (1) from battery box (11).

INSTALLATION

NOTE

Perform steps 1 and 2 only if angle bracket was removed.

1. Install angle bracket (1) on battery box (11) with three screws (10), washers (12), and new locknuts (13).
2. Install batteries (WP 0143 00).
3. Install NATO slave receptacle (5) and cap (7) on angle bracket (1) with four screws (6), washers (8), and nuts (9).
4. Install two cables (2) on NATO slave receptacle (5) with two lockwashers (3) and screws (4).

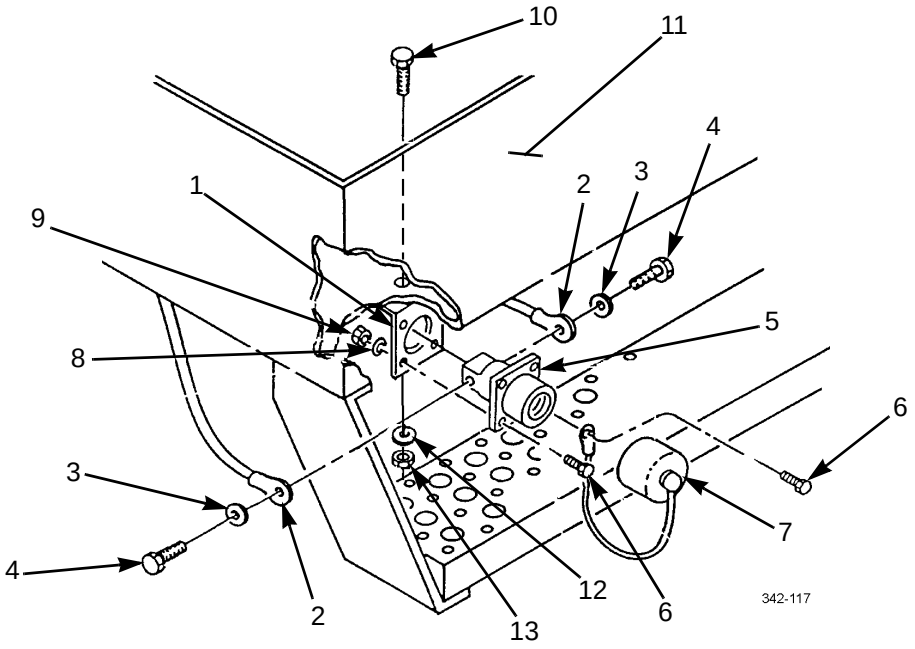

END OF WORK PACKAGE

UTILITY POWER RECEPTACLE REPLACEMENT 0091 00

THIS WORK PACKAGE COVERS

Removal, Installation

INITIAL SETUP

Tools and Special Tools

Tool kit, general mechanic's (Item 50, WP 0306 00)

Riveter, blind, hand (Item 38, WP 0306 00)

Materials/Parts

Rivet, blind (P/N 23-101624-01) (2)

Washer, lock (P/N MS35338-135) (2)

Materials/Parts - Continued

Adhesive (Item 1, WP 0305 00)

Tags, marker (Item 34, WP 0305 00)

Equipment Condition

Cab liners removed (WP 0264 00)

Master battery switch in OFF position (TM 9-2320-302-10)

NOTE

- Cab has two exterior utility power receptacles.
- Tag wires prior to removal to aid in installation.

REMOVAL

1. Remove two screws (1), wires (2), and four lockwashers (3) from receptacle (4). Discard lockwashers.
2. Remove cover (6) from receptacle (4).

NOTE

Note position of receptacle for installation.

3. Remove two rivets (5), receptacle (4), and chain (7) from cab. Discard rivets.

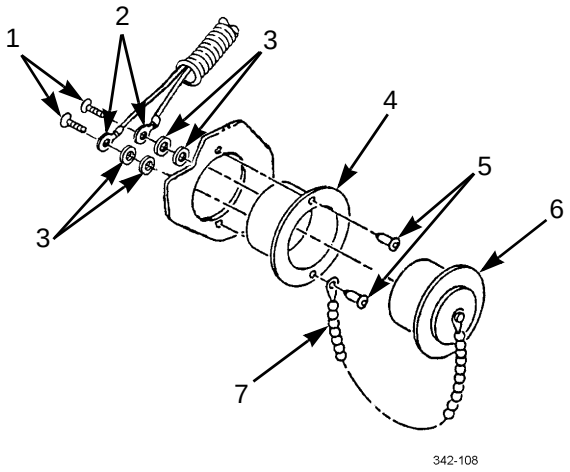

INSTALLATION


WARNING

Adhesives and sealing compounds can burn easily, can give off harmful vapors, and are harmful to skin and clothing. To avoid injury or death, keep away from open fire and use in a well-ventilated area. If adhesive or sealing compound contacts skin or clothing, wash immediately with soap and water.

1. Lightly coat mating surfaces of receptacle (4) and cab with adhesive.
2. Install receptacle (4) and chain (7) on cab with two new rivets (5).
3. Install cover (6) on receptacle (4).
4. Install four new lockwashers (3) and two wires (2) on receptacle (4) with two screws (1).
5. Install cab liners (WP 0264 00).

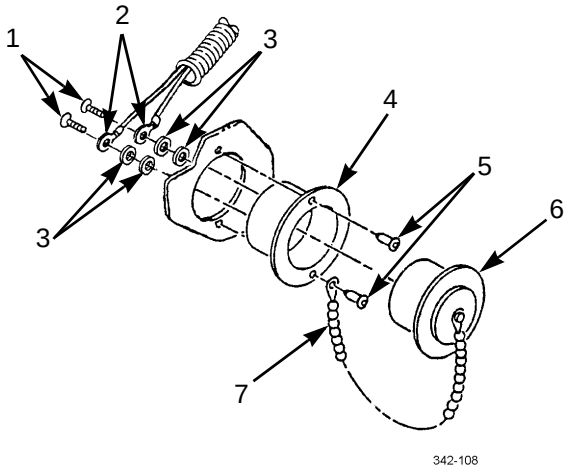

END OF WORK PACKAGE

TRAILER ELECTRICAL RECEPTACLES REPLACEMENT (M915A3, M916A3) 0092 00

THIS WORK PACKAGE COVERS

Removal, Installation

INITIAL SETUP

Tools and Special Tools

Tool kit, general mechanic's (Item 50, WP 0306 00)

References

WP 0151 00

Equipment Condition

Master battery switch in OFF position (TM 9-2320-302-10)

REMOVAL

1. Remove four nuts (1), washers (6), and screws (7) from trailer electrical receptacle (4).
2. Remove trailer electrical receptacle (4) and cover (5) from bracket (3).

NOTE

- Other two electrical receptacles use two nuts, washers, and screws.
- Although each panel is slightly different in configuration for each model, all receptacles are replaced the same way.

3. Repeat steps 1 and 2 for each of two other electrical receptacles (2).
4. Refer to WP 0151 00 to remove electrical receptacles (2 or 4) from electrical cable.

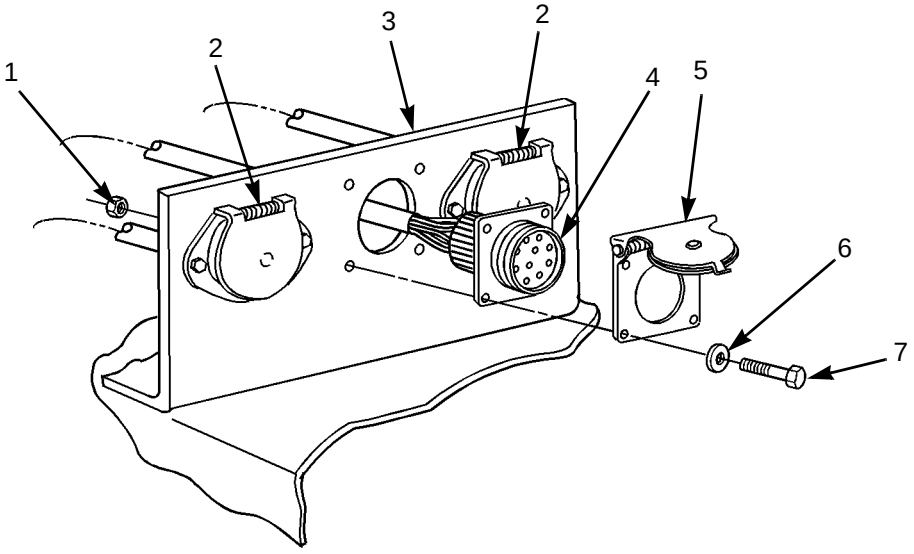

342-130

INSTALLATION

1. Refer to WP 0151 00 to install electrical receptacles (2 or 4) on electrical cable.
2. Install electrical receptacle (4) and cover (5) on bracket (3) with four screws (7), washers (6), and nuts (1).

NOTE

Other two electrical receptacles use two nuts, washers, and screws.

3. Repeat step 2 for each of two other electrical receptacles (2).

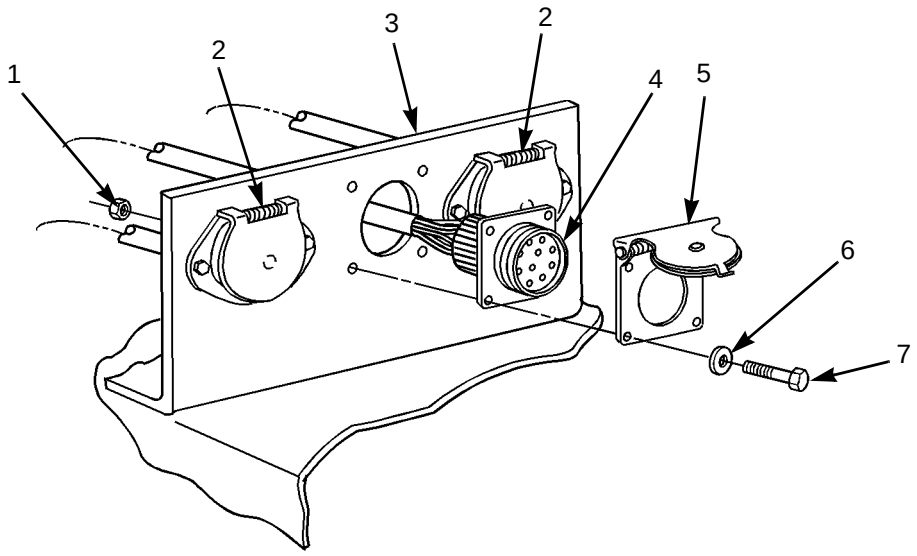

342-130

END OF WORK PACKAGE

PARKING BRAKE PRESSURE SWITCH REPLACEMENT 0093 00

THIS WORK PACKAGE COVERS

Removal, Installation

INITIAL SETUP

Maintenance Level

Unit

Tools and Special Tools

Tool kit, general mechanic's (Item 102, WP 0333 00)

Goggles, industrial (Item 30, WP 0333 00)

Wrench set, socket attachment (Item 114, WP 0333 00)

Materials/Parts

Compound, sealing, pipe (Item 17, WP 0332 00)

References

TM 9-2320-303-10

Equipment Condition

Air system drained (TM 9-2320-303-10)

Master battery switch in OFF position (TM 9-2320-303-10)

REMOVAL

1. Remove six torx screws (1), defroster vent (2), and dashboard cover (3) from dashboard.

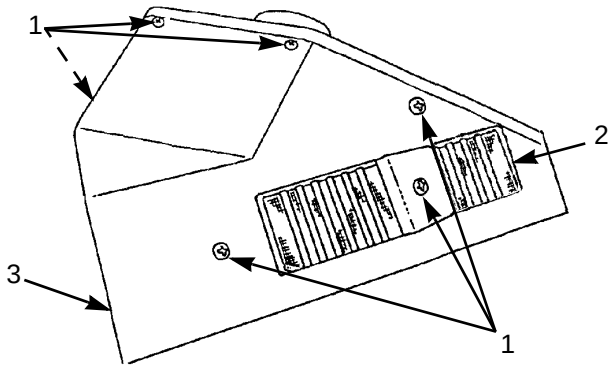

2. Remove wiring harness connector (4) from parking brake pressure switch (5).

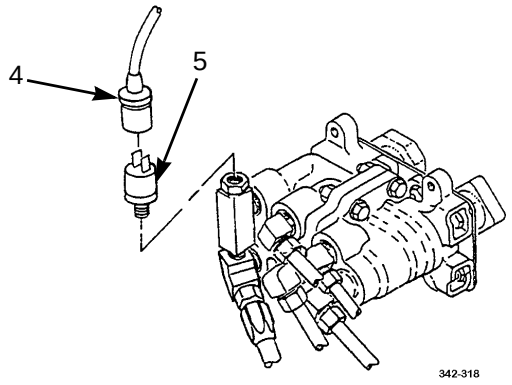

REMOVAL - CONTINUED

WARNING

- DO NOT disconnect any air system lines or fittings unless vehicle engine is shut down and air system pressure is relieved. Failure to follow this warning could result in serious injury to personnel.
- Always wear eye protection when disconnecting air lines. Residual air will be expelled. Failure to follow this warning may result in serious eye injury.

3. Remove parking brake pressure switch (5) from adapter fitting (6).

INSTALLATION


WARNING

- Adhesives and sealing compounds can burn easily, can give off harmful vapors, and are harmful to skin and clothing. To avoid injury or death, keep away from open fire and use in a well-ventilated area. If adhesives or sealing compound gets on skin or clothing, wash immediately with soap and water.
- Ensure that all air lines and fittings are clear of debris and excess pipe sealing compound does not enter air lines or fittings. Failure to follow this warning could result in injury to personnel and damage to equipment.

1. Lightly coat threads on parking brake pressure switch (5) with pipe sealing compound.
2. Install parking brake pressure switch (5) on adapter fitting (6).
3. Install wiring harness connector (4) on parking brake pressure switch (5).

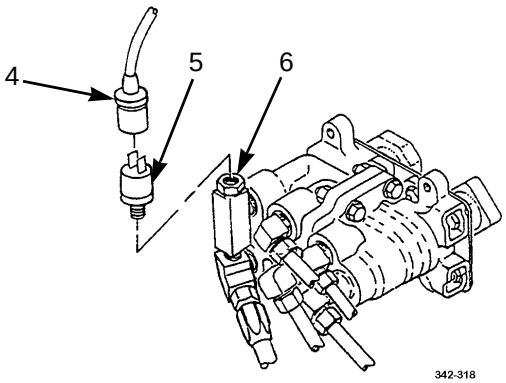

4. Start vehicle, pressurize air system, apply parking brake and check for air leaks (TM 9-2320-303-10).

NOTE

Ensure that parking brake light illuminates when parking brake is applied.

INSTALLATION - CONTINUED

5. Shut vehicle off (TM 9-2320-303-10).
6. Install dash panel cover (3) and defroster vent (2) with six torx screws (1).

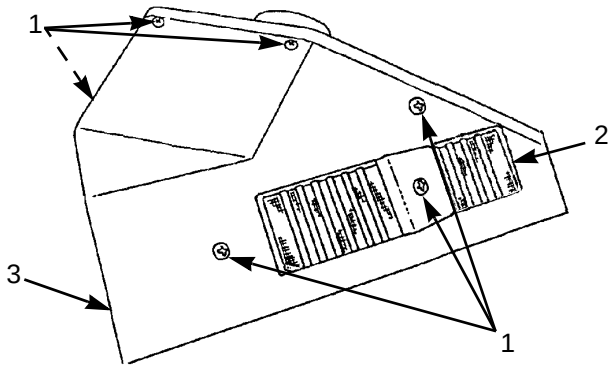

371-265

END OF WORK PACKAGE

ELECTRONIC DATA MONITOR REPLACEMENT 0094 00

THIS WORK PACKAGE COVERS

Removal, Installation

INITIAL SETUP

Tools and Special Tools

Tool kit, general mechanic's (Item 50, WP 0306 00)

Equipment Condition

Master battery switch in OFF position (TM 9-2320-302-10)

REMOVAL

1. Unlock three fasteners (1) and remove cover (2).
2. Remove two screws (5) and electronic data monitor (4) from firewall (6).
3. Disconnect two connectors (3) from electronic data monitor (4).

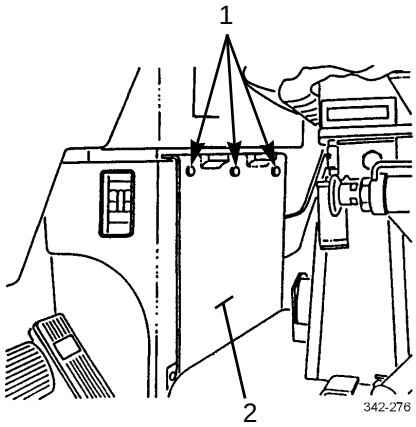

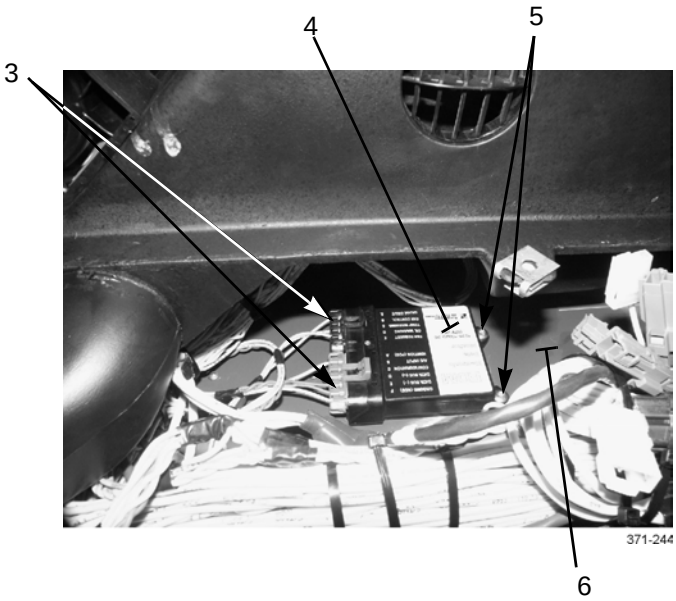

INSTALLATION

1. Install electronic data monitor (4) on firewall (6) with two screws (5).
2. Connect two connectors (3) to electronic data monitor (4).
3. Install cover (2) and lock three fasteners (1).

END OF WORK PACKAGE

WATER LEVEL PROBE REPLACEMENT 0095 00

THIS WORK PACKAGE COVERS

Removal, Installation

INITIAL SETUP

Tools and Special Tools

Tool kit, general mechanic's (Item 50, WP 0306 00)

Materials/Parts

Compound, sealing, pipe (Item 13, WP 0305 00)

Equipment Condition

Cooling system drained (WP 0046 00)

Master battery switch in OFF position (TM 9-2320-302-10)

REMOVAL

1. Disconnect wiring harness connector (1) from water level probe (2).
2. Remove water level probe (2) and bushing (3) (M915A3 Old Model) from tank (4).

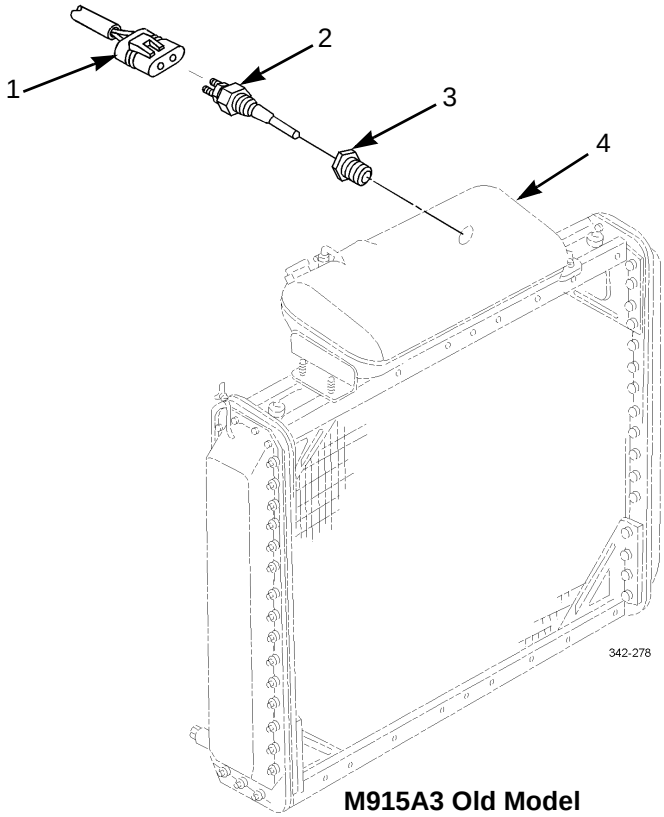

M915A3 Old Model

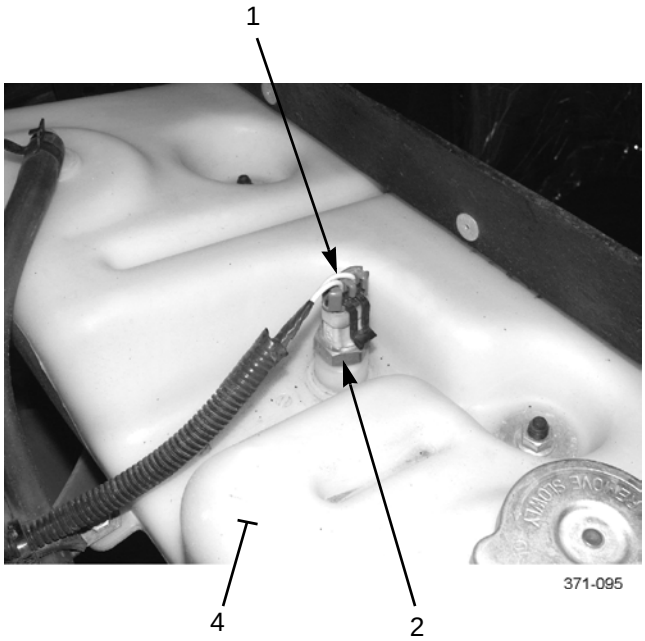

M915A3 New Model, M916A3, M917A2

INSTALLATION


WARNING

Adhesives and sealing compounds can burn easily, can give off harmful vapors, and are harmful to skin and clothing. To avoid injury or death, keep away from open fire and use in a well-ventilated area. If adhesives or sealing compound contacts skin or clothing, wash immediately with soap and water.

1. Lightly coat threads of bushing (3) (M915A3 Old Model) and water level probe (2) with pipe sealing compound. Install bushing and water level probe on tank (4).
2. Connect wiring harness connector (1) to water level probe (2).

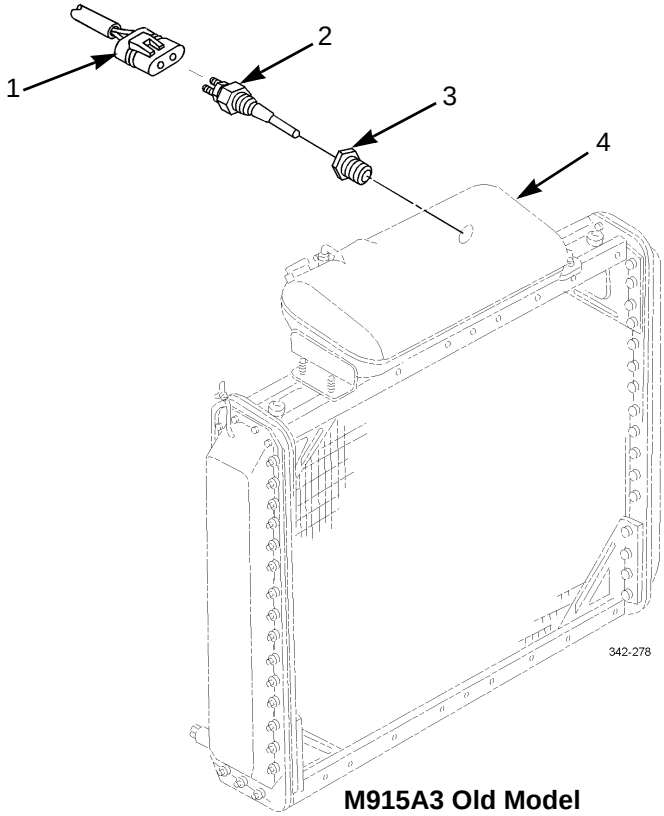

M915A3 Old Model

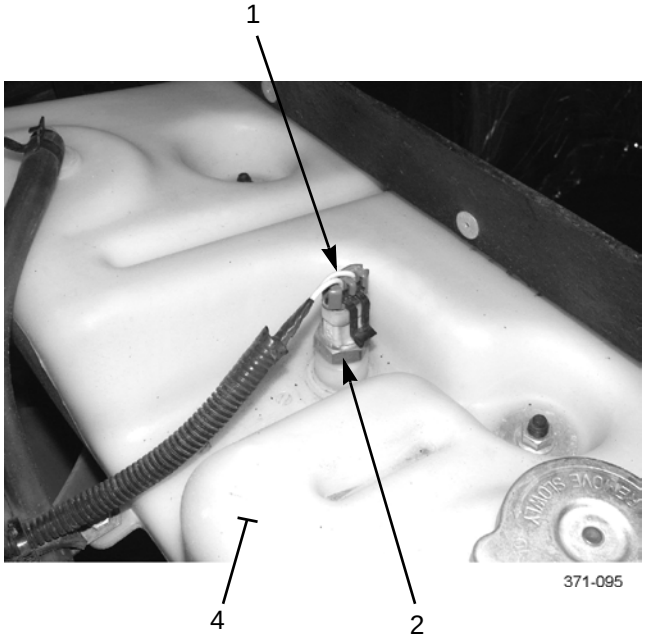

M915A3 New Model, M916A3, M917A2

3. Fill cooling system (WP 0046 00).

END OF WORK PACKAGE

HEADLAMP ADJUSTMENT 0096 00

THIS WORK PACKAGE COVERS

Adjustment

INITIAL SETUP

Tools and Special Tools

Tool kit, general mechanic's (Item 50, WP 0306 00)

Tape, measuring, 50 feet (Item 45, WP 0306 00)

Equipment Condition

Tires inflated to recommended pressure (TM 9-2320-302-10)

Headlights in ON position (TM 9-2320-302-10)

NOTE

Perform adjustment procedures with no load on vehicle.

ADJUSTMENT

1. Determine center of vehicle by measuring distance between two tow brackets (2) and dividing distance by 2.
2. Measure distance determined in step 1 from either of two tow brackets (2) to center of bumper (1). Mark bumper.

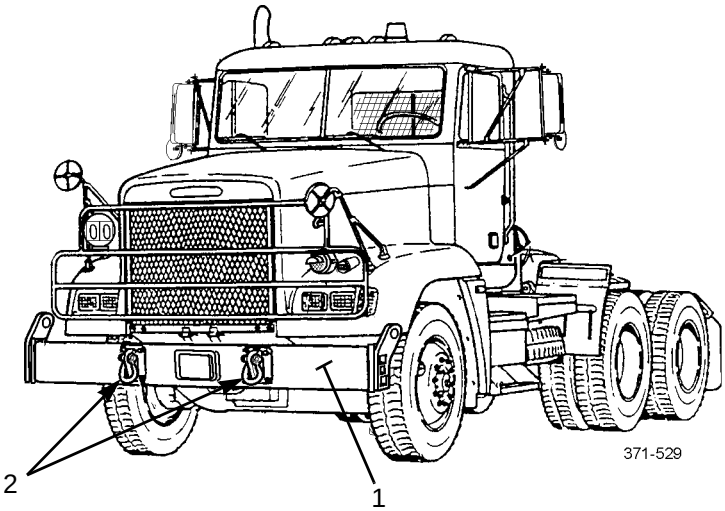

3. Drive vehicle close to a light-colored wall with front bumper (1) parallel to wall.
4. Transfer center mark of bumper (1) to wall.

ADJUSTMENT - CONTINUED

5. Back vehicle in a STRAIGHT line away from wall until vehicle is 25 ft (7.63 m) from wall. Park vehicle.
6. Extend mark on wall upward and downward to floor. Ensure that line is vertical. This is vehicle centerline.
7. On vehicle centerline, measure upward 41 in (104.1 cm) from floor. Make a horizontal line parallel to floor.
8. Determine low-beam headlight center by measuring outward 36.5 in (92.7 cm) on each side of vehicle centerline. Mark center.
9. Measure 4 in (10.2 cm) in all four directions from mark to make an 8 in (20.3 cm) square.
10. Repeat step 9 on other side of vehicle centerline.
11. Determine high-beam headlamp center by measuring inward 7.5 in (19.1 cm) on each side of vehicle center line. Mark center.

NOTE

Low-beam and high-beam squares will overlap slightly.

12. Measure 4 in (10.2 cm) in all four directions from each mark to make two more 8 in (20.3 cm) squares.

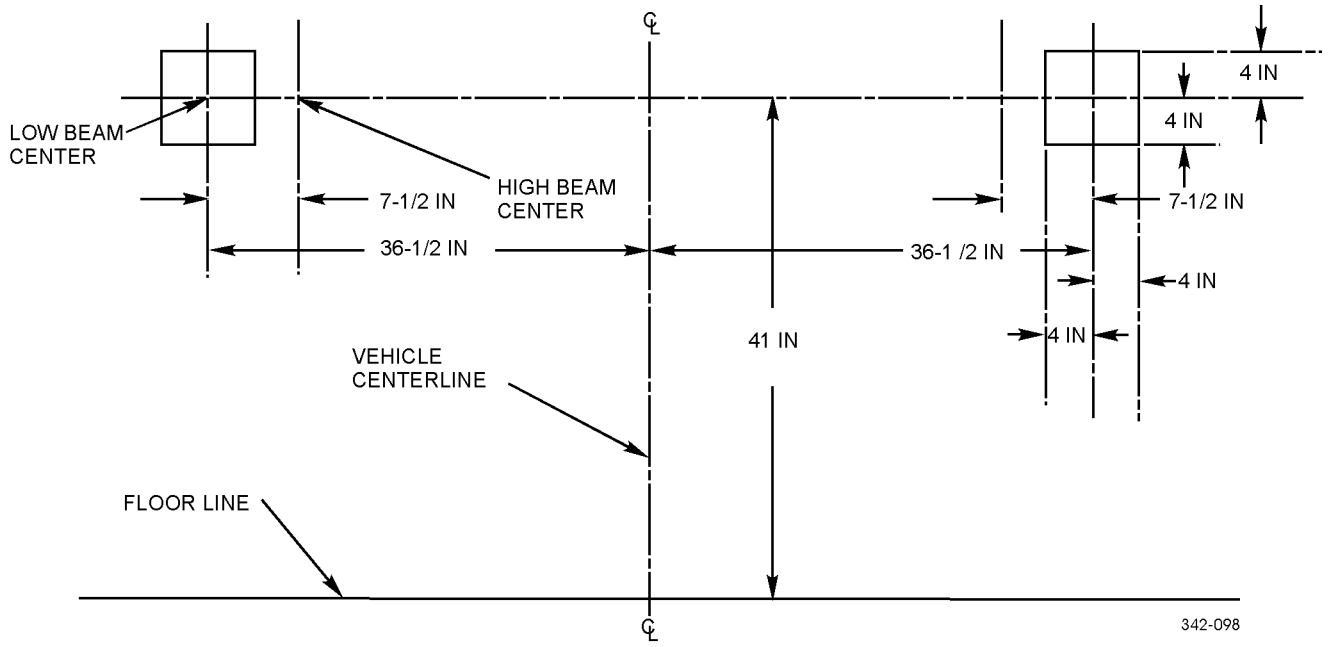

ADJUSTMENT - CONTINUED

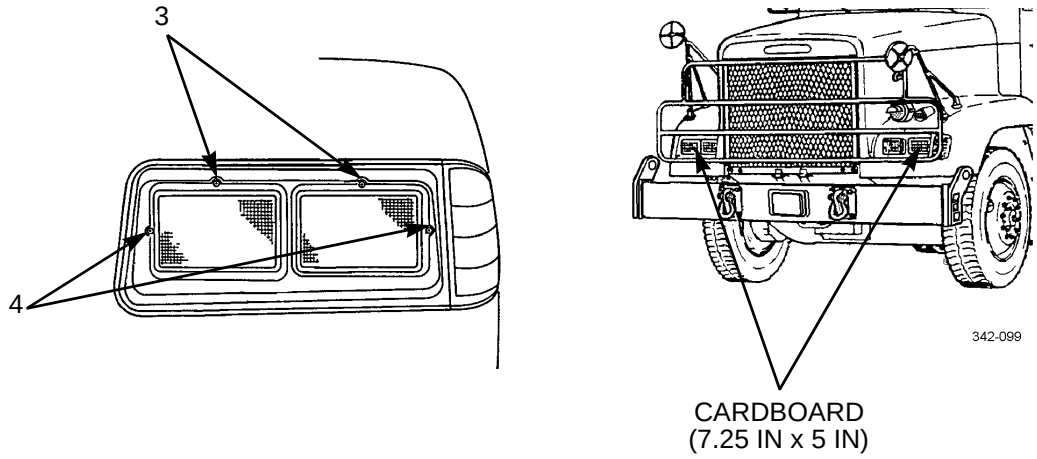

13. With low-beam headlamps on, adjust each headlamp until highest intensity point is slightly to right and slightly below headlamp centerlines +/- 4 in (+/- 10.2 cm). To adjust intensity point up or down, rotate center adjusting screw (3) left or right. To adjust intensity point left or right, rotate side adjusting screw (4) left or right.
14. With high-beam headlamps on, cover each low-beam headlamp with cardboard cut to 7.25 in x 5 in (18.4 cm x 13 cm).
15. Adjust each headlamp until highest intensity point is over centerline mark +/- 4 in (+/- 10.2 cm). To adjust intensity point up or down, rotate center adjusting screw (3) left or right. To adjust intensity point left or right, rotate side adjusting screw (4) left or right.

END OF WORK PACKAGE

HEADLAMP AND HEADLIGHT REPLACEMENT 0097 00

THIS WORK PACKAGE COVERS

Headlamp Removal, Headlight Removal, Headlight Installation, Headlamp Installation

INITIAL SETUP

Tools and Special Tools

Tool kit, general mechanic's (Item 50, WP 0306 00)

Materials/Parts

Nut, lock (P/N MS23-11488-110)

Adhesive, silicone rubber (Item 5, WP 0305 00)

References

WP 0096 00

Equipment Condition

Master battery switch in OFF position (TM 9-2320-302-10)

HEADLAMP REMOVAL

NOTE

Left and right headlamps are replaced the same way. Left headlamp is illustrated.

1. Remove four screws (5) from bezel (6) and pull bezel outward from front of vehicle.
2. Disconnect connector (4) from turn signal/marker light and remove bezel (6) from vehicle.
3. Remove four screws (1) and headlamp retainers (2) from headlamps (3).
4. Disconnect and remove headlamps (3) from vehicle.

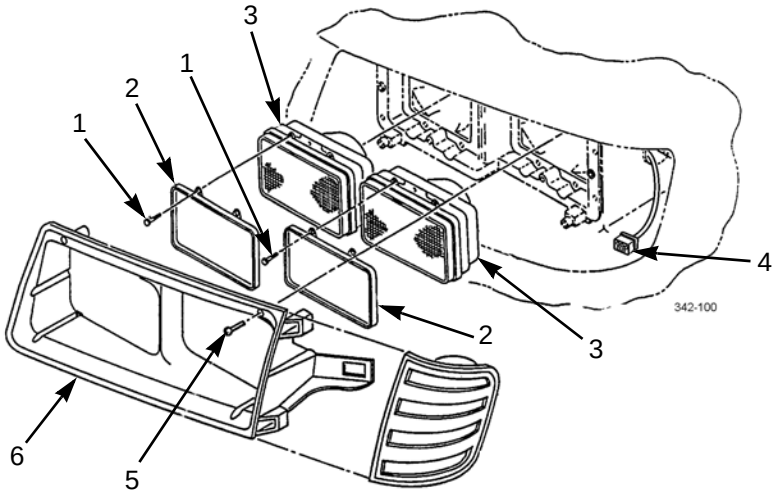

HEADLIGHT REMOVAL

1. Remove connector (9) from wiring harness (7).
2. Remove locknut (13), screw (10), washer (11), and clamp (12) from bracket (9). Discard locknut.
3. Remove screw (8) and clamp (17) from headlight assembly (16).
4. Remove eight screws (15) and headlight assembly (16) from vehicle.

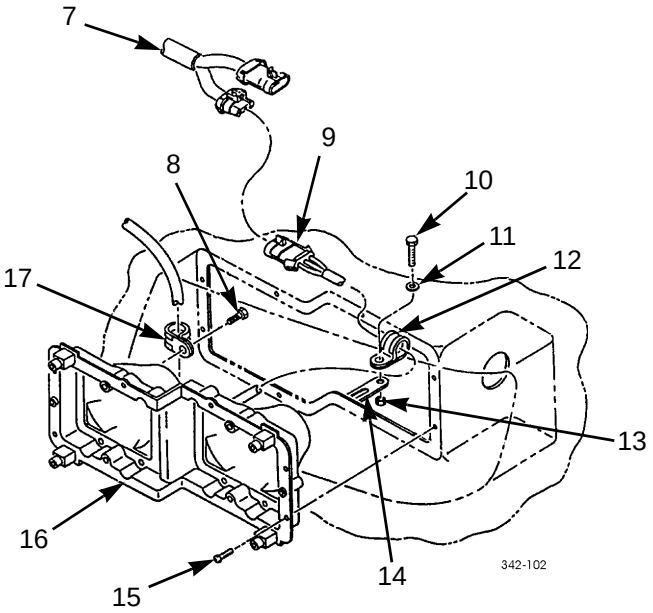

5. Remove four grommets (18) from headlight assembly (16).

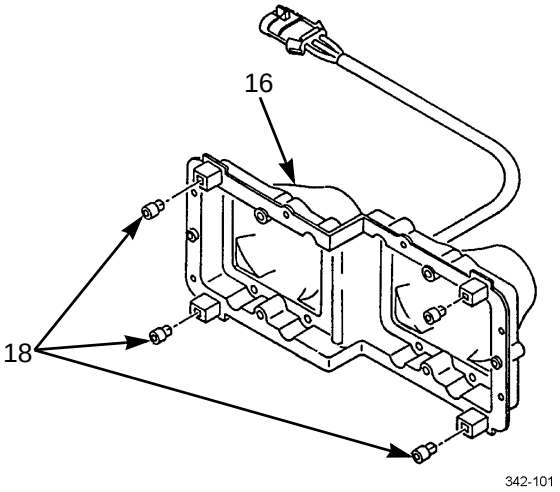

HEADLIGHT INSTALLATION

1. Install four grommets (18) on headlight assembly (16).

HEADLIGHT INSTALLATION - CONTINUED

WARNING

Adhesives and sealing compounds can burn easily, can give off harmful vapors, and are harmful to skin and clothing. To avoid injury or death, keep away from open fire and use in a well-ventilated area. If adhesives or sealing compound contacts skin or clothing, wash immediately with soap and water.

2. Apply adhesive to mating surface of headlight assembly (16). Install headlight assembly on vehicle with eight screws (15).
3. Install clamp (17) and screw (8) on headlight assembly (16).
4. Install clamp (12) on bracket (14) with washer (11), screw (10), and new locknut (13).
5. Connect connector (9) on wiring harness (7).

HEADLAMP INSTALLATION

NOTE

Procedure is the same for all headlamps.

1. Connect and install headlamps (3) on vehicle.
2. Install headlamp retainers (2) on headlamps (3) and four screws (1).
3. Connect connector (4) of cab wiring harness to rear of bezel (6) and position bezel on vehicle.
4. Install four screws (5) on bezel (6).
5. Adjust headlamps (3) (WP 0096 00).

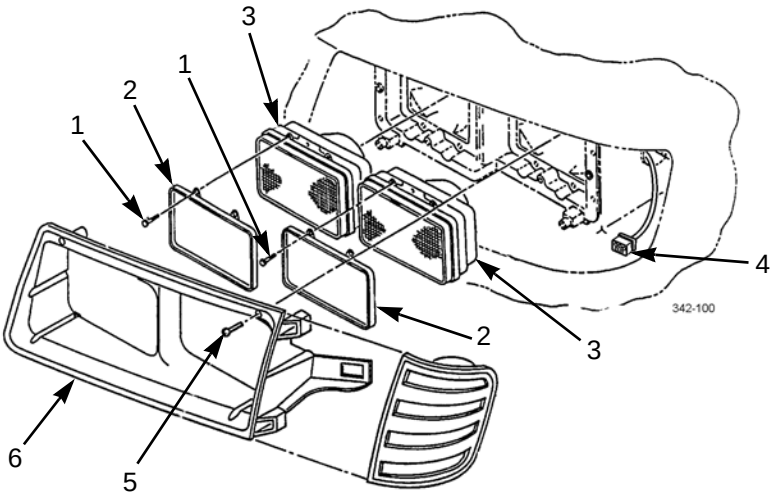

END OF WORK PACKAGE

FRONT BLACKOUT DRIVE LIGHT REPLACEMENT 0098 00

THIS WORK PACKAGE COVERS

Removal, Installation

INITIAL SETUP

Tools and Special Tools

Tool kit, general mechanic's (Item 50, WP 0306 00)

Materials/Parts

Straps, tiedown (Item 33, WP 0305 00)

Tags, marker (Item 34, WP 0305 00)

Tape, insulation, electrical (Item 37, WP 0305 00)

Nut, lock (P/N M45913/1-4CG5C) (3)

Materials/Parts - Continued

Washer, lock (P/N 004-003005-055)

References

WP 0151 00

Equipment Condition

Master battery switch in OFF position (TM 9-2320-302-10)

Hood opened (TM 9-2320-302-10)

REMOVAL

NOTE

- Remove tiedown straps as required and discard. Use new tiedown straps on installation.
- Tag connectors to ensure correct installation.

1. Disconnect blackout marker light connector (2) from wiring harness connector (3).
2. Disconnect blackout marker light (single-wire) connector (4) from wiring harness connector (7).
3. Disconnect blackout drive light (2-wire) connector (5) from wiring harness connector (6).
4. Remove electrical tape and wire looms. Separate blackout marker light wires from blackout drive light wires. Remove connectors (2, 4, and 5) from ends of wires (WP 0151 00).

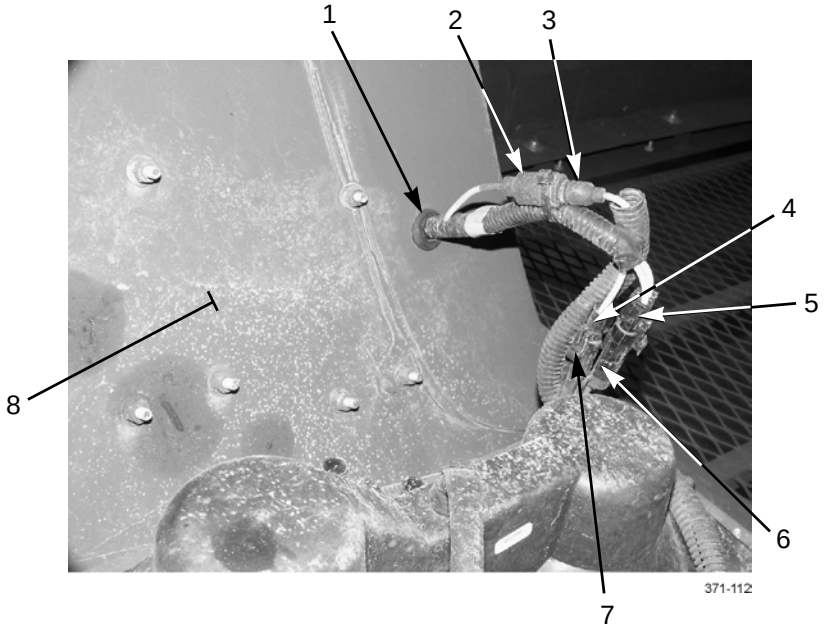

FRONT BLACKOUT DRIVE LIGHT REPLACEMENT - CONTINUED 0098 00

REMOVAL - CONTINUED

5. Remove nut (11), lockwasher (12), ground wire (10), and blackout drive light (9) from mounting bracket (13). Discard lockwasher.
6. Remove grommet (1) and pull blackout drive and marker light wires through fender (8) while removing blackout drive light (9).
7. If damaged, remove three locknuts (14) washers (15), screws (16), and mounting bracket (13) from fender (8). Discard locknuts.

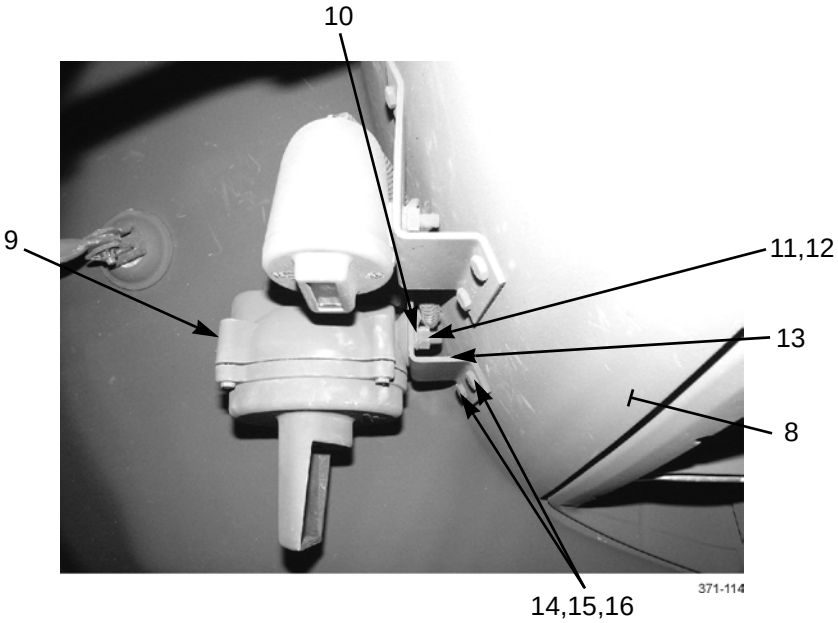

INSTALLATION

1. If removed, install mounting bracket (13) to fender (8) with three screws (16), washers (15), and new locknuts (14).

NOTE

Ensure that wire loom is installed over wires before wires are fed through fender.

2. Feed blackout drive and marker light wires through grommet (1) and fender (8). Seat grommet in fender.
3. Install blackout drive light (9) and ground wire (10) to mounting bracket (13) with new lockwasher (12) and nut (11).

INSTALLATION - CONTINUED

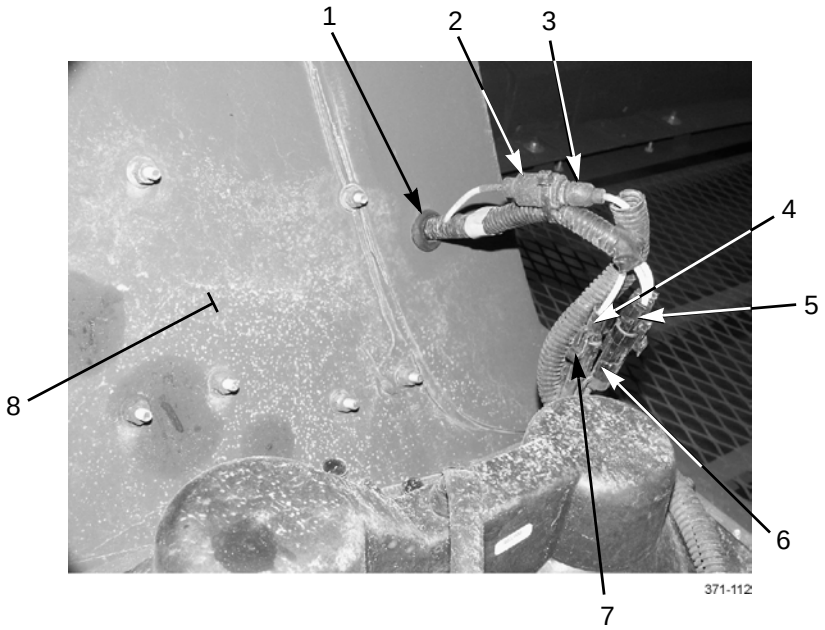

4. Install connectors (2, 4, and 5) on wires (WP 0151 00).
5. Connect blackout drive light (2-wire) connector (5) to wiring harness connector (6).
6. Connect blackout marker light (single-wire) connector (4) to wiring harness connector (7).
7. Connect blackout marker light connector (2) to wiring harness connector (3).
8. Install wire looms around wires and secure wire looms with electrical tape.

END OF WORK PACKAGE

FRONT BLACKOUT MARKER LIGHT REPLACEMENT 0099 00

THIS WORK PACKAGE COVERS

Removal, Installation

INITIAL SETUP

Tools and Special Tools

Tool kit, general mechanic's (Item 50, WP 0306 00)

Materials/Parts

Straps, tiedown (Item 33, WP 0305 00)

Tags, marker (Item 34, WP 0305 00)

Tape, insulation, electrical (Item 37, WP 0305 00)

Nut, lock (P/N M45913/1-4CG5C) (3)

Materials/Parts - Continued

Washer, lock (P/N MS35338-140)

References

WP 0151 00

Equipment Condition

Master battery switch in OFF position (TM 9-2320-302-10)

Hood opened (TM 9-2320-302-10)

NOTE

- Replacement of right- and left-front blackout marker lights is the same except that left-front blackout marker light wires must be separated from blackout drive light wires during replacement procedure, by removing electrical tape and wire looms. Blackout drive light wires must also be removed from fender as blackout marker light wires are removed.
- Left-front blackout marker light is illustrated.

REMOVAL

NOTE

- Remove tiedown straps as required and discard.
- Tag connectors to ensure correct installation.

1. Disconnect blackout marker light connector (2) from wiring harness connector (3).
2. Disconnect blackout marker light (single-wire) connector (4) from wiring harness connector (7).
3. Disconnect blackout drive light (2-wire) connector (5) from wiring harness connector (6).
4. If removing left-front blackout marker light, remove electrical tape and wire looms. Separate blackout marker light wires from blackout drive light wires. Remove connectors (2, 4, and 5) from ends of wires (WP 0151 00).

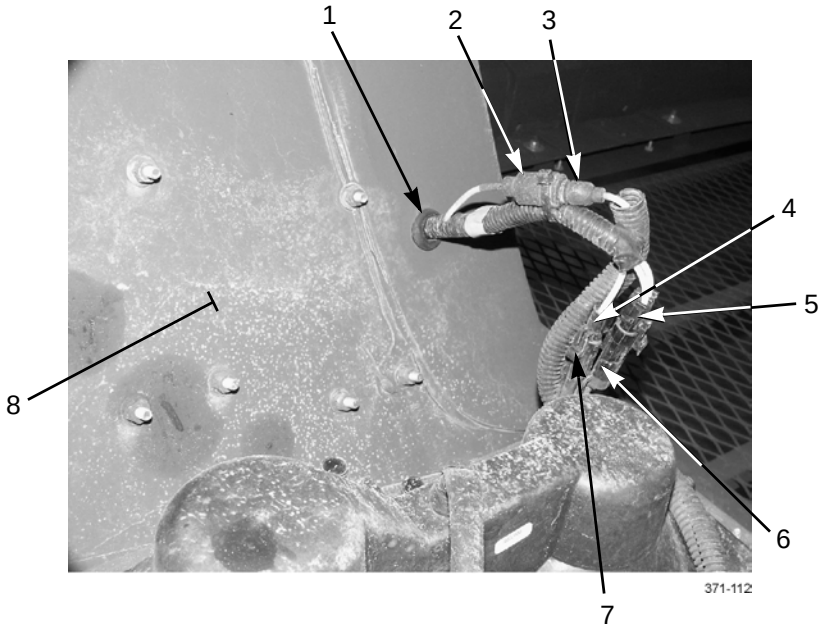

5. Remove nut (14), lockwasher (15), ground wire (13), and blackout marker light (9) from mounting bracket (16). Discard lockwasher.
6. Remove grommet (1) and pull blackout marker and drive light wires through fender (8) while removing blackout marker light (9).
7. If damaged, remove three locknuts (10) washers (11), screws (12), and mounting bracket (16) from fender (8). Discard locknuts.

REMOVAL - CONTINUED

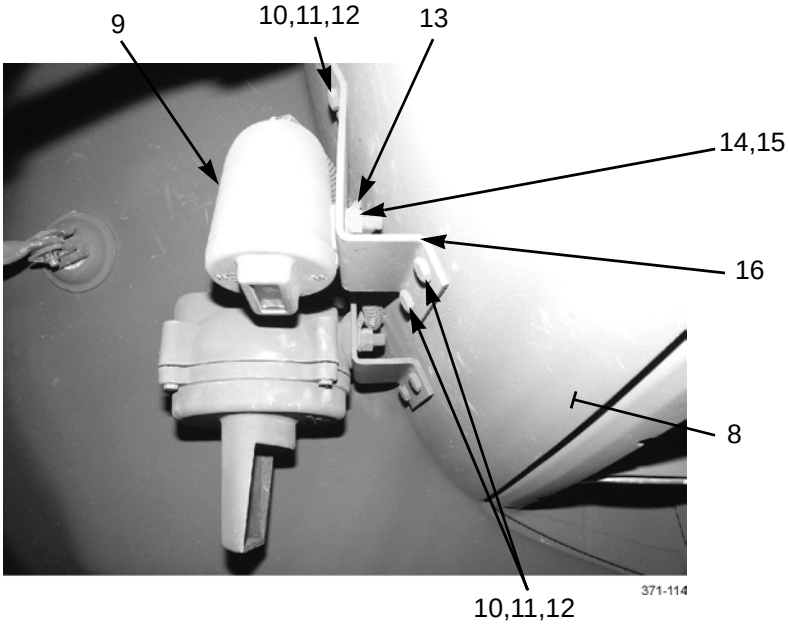

INSTALLATION

1. If removed, install mounting bracket (16) to fender (8) with three screws (12), washers (11), and new locknuts (10).

NOTE

Ensure that wire loom is installed over wires before wires are fed through fender.

2. Feed blackout marker and drive light wires through grommet (1) and fender (8). Seat grommet in fender.
3. Install blackout marker light (9) and ground wire (13) to mounting bracket (16) with new lockwasher (15) and nut (14).
4. Install connectors (2, 4, and 5) on wires (WP 0151 00).
5. Connect blackout drive light (2-wire) connector (5) to wiring harness connector (6).
6. Connect blackout marker light (single-wire) connector (4) to wiring harness connector (7).
7. Connect blackout marker light connector (2) to wiring harness connector (3).
8. If installing left-front blackout marker light, install wire looms around wires and secure wire looms with electrical tape.

END OF WORK PACKAGE

REAR BLACKOUT MARKER LIGHT REPLACEMENT (M915A3 OLD MODEL) 0100 00

THIS WORK PACKAGE COVERS

Removal, Installation

INITIAL SETUP

Tools and Special Tools

Tool kit, general mechanic's (Item 50, WP 0306 00)

Materials/Parts

Nut, lock (P/N 23-09336-005) (2)

Tags, marker (Item 34, WP 0305 00)

Equipment Condition

Master battery switch in OFF position (TM 9-2320-302-10)

NOTE

Rear blackout marker lights are replaced the same. Perform procedure for each rear blackout marker as required.

REMOVAL

NOTE

Tag connectors to aid in installation.

1. Disconnect two connectors (1).
2. Remove nut (2), washer (3), and clamp (6).
3. Remove two locknuts (4) and blackout marker (5). Discard locknuts.

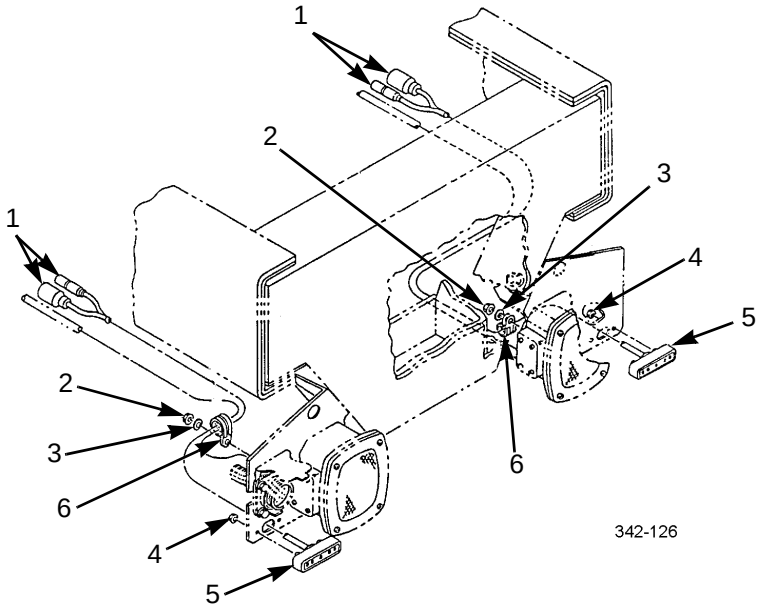

INSTALLATION

1. Install blackout marker (5) with two new locknuts (4).
2. Install clamp (6), washer (3), and nut (2).
3. Connect two connectors (1).

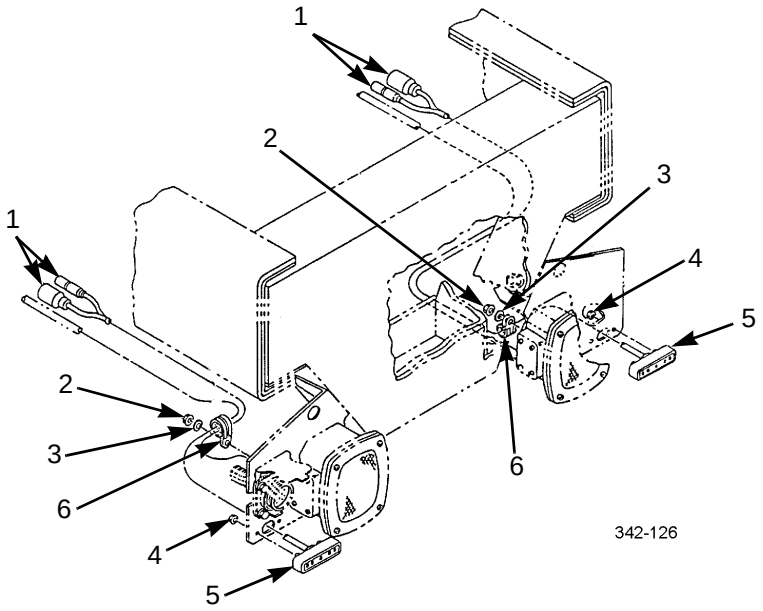

END OF WORK PACKAGE

TAILLIGHT MAINTENANCE (M915A3 OLD MODEL) 0101 00

THIS WORK PACKAGE COVERS

Lamp Replacement, Removal, Installation

INITIAL SETUP

Tools and Special Tools

Tool kit, general mechanic's (Item 50, WP 0306 00)

Materials/Parts

Nut, lock (P/N 23-09336-005) (3)

Equipment Condition

Master battery switch in OFF position (TM 9-2320-302-10)

LAMP REPLACEMENT

1. Remove four screws (4) and lens (5) from taillight housing (1).
2. Inspect gasket (3) for damage. Replace gasket if damaged.
3. Remove lamps (2 and 6) by pushing in and turning counter-clockwise.
4. Install lamps (2 and 6) by pushing in and turning clockwise.
5. Install lens (5) on taillight housing (1) with four screws (4).

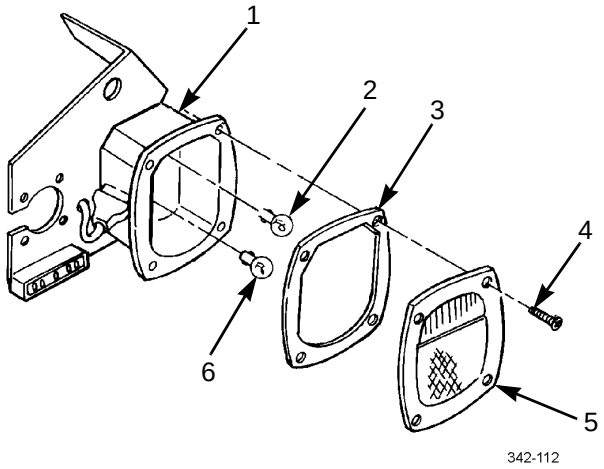

NOTE

Left and right taillights are replaced the same way. Left taillight is shown.

REMOVAL

1. Disconnect taillight wiring harness connector (9) from taillight housing (1).
2. Remove three locknuts (10), washers (7), and taillight housing (1) from bracket (8). Discard locknuts.

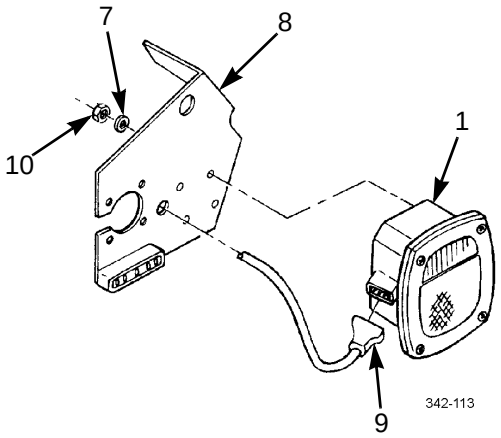

INSTALLATION

1. Install taillight housing (1) on bracket (8) with three washers (7) and new locknuts (10).
2. Connect taillight wiring harness connector (9) to taillight housing (1).

END OF WORK PACKAGE

TAILLIGHT REPLACEMENT (M915A3 NEW MODEL, M916A3, M917A2) 0102 00

THIS WORK PACKAGE COVERS

Removal, Installation

INITIAL SETUP

Tools and Special Tools

Tool kit, general mechanic's (Item 50, WP 0306 00)

Wrench set, socket attachment, screwdriver, torx (Item 61, WP 0306 00)

Materials/Parts

Straps, tiedown (Item 33, WP 0305 00)

Tags, marker (Item 34, WP 0305 00)

Nut, lock (P/N 23-09336-005) (6)

Equipment Condition

Master battery switch in OFF position (TM 9-2320-302-10)

REMOVAL

NOTE

- Cut tiedown straps and discard. Use new tiedown straps on installation.
- Tag connectors to ensure correct installation.

1. Disconnect five taillight connectors (1) from wiring harness connectors (2).
2. Remove six locknuts (5), washers (6), torx screws (7), taillight (3), and gasket (8) from bracket (4). Discard locknuts.

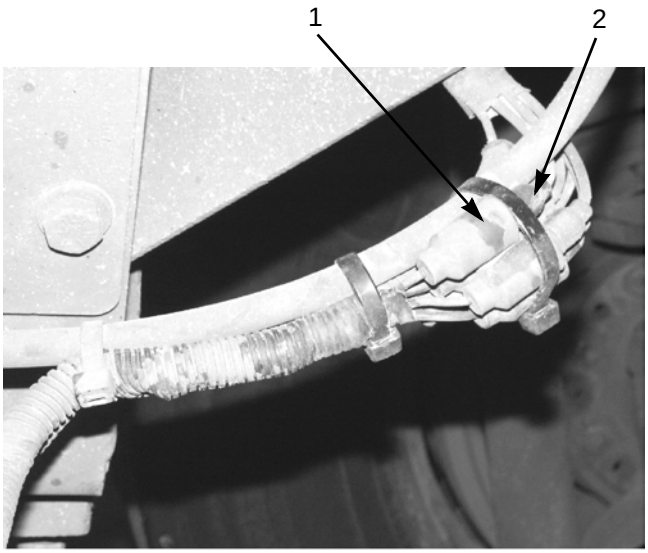

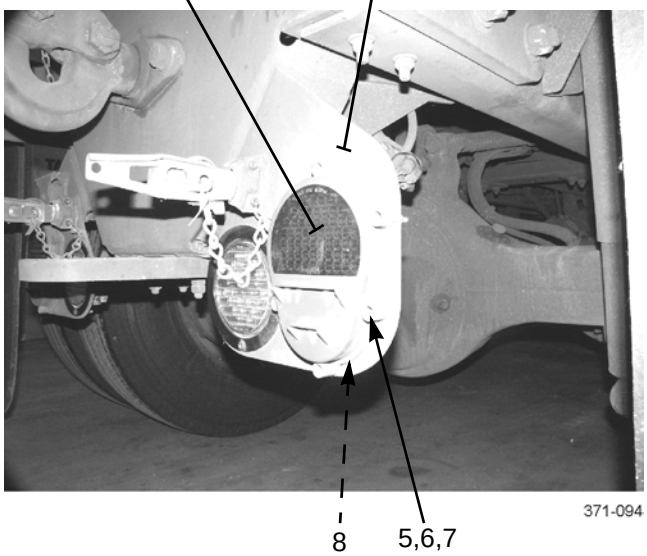

INSTALLATION

NOTE

- Replacement taillight comes with a gasket.
- Ensure that mounting surface for taillight is clean and free of old gasket material.

1. Install gasket (8) and taillight (3) to bracket (4) with six torx screws (7), washers (6), and new locknuts (5).
2. Connect five taillight connectors (1) to wiring harness connectors (2). Install new tiedown straps.

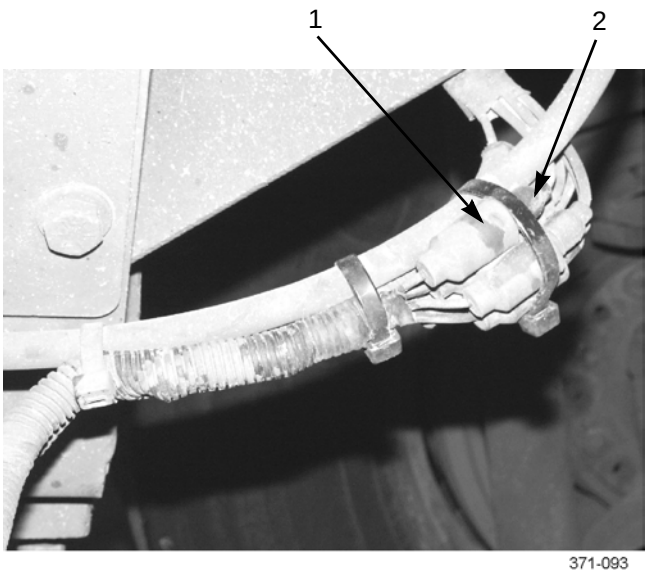

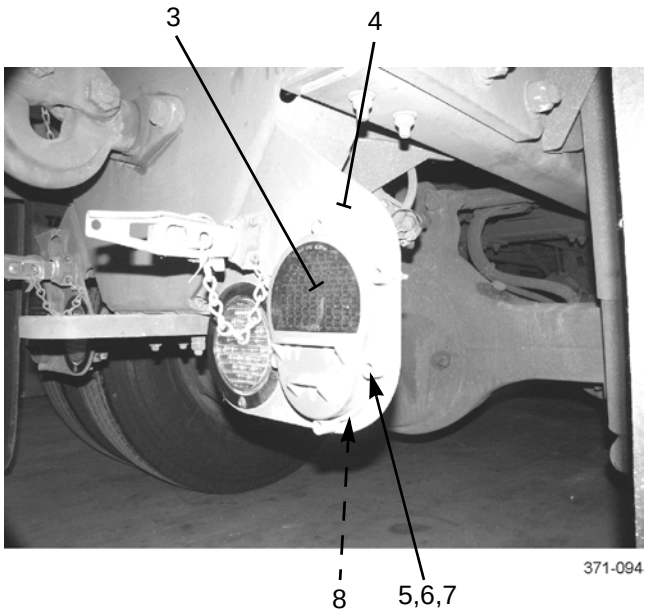

END OF WORK PACKAGE

SIDE MARKER/TURN SIGNAL LIGHT REPLACEMENT (M915A3 OLD MODEL) 0103 00

THIS WORK PACKAGE COVERS

Removal, Installation

INITIAL SETUP

Tools and Special Tools

Tool kit, general mechanic's (Item 50, WP 0306 00)

Materials/Parts

Gasket (P/N GNI 9700G1)

Nut, lock (P/N 23-09336-005) (2)

Equipment Condition

Master battery switch in OFF position (TM 9-2320-302-10)

NOTE

Left and right side marker/turn signal lights are replaced the same way. Left side marker/turn signal light is shown.

REMOVAL

1. Remove two locknuts (2), washers (3), clamp (4), two screws (8), lens cover (7), and gasket (6) from side marker/turn signal light (5). Discard locknuts and gasket.
2. Remove lamp (9) from side marker/turn signal light (5).
3. Disconnect connector (1) from side marker/turn signal light (5). Remove side marker/turn signal light from vehicle.

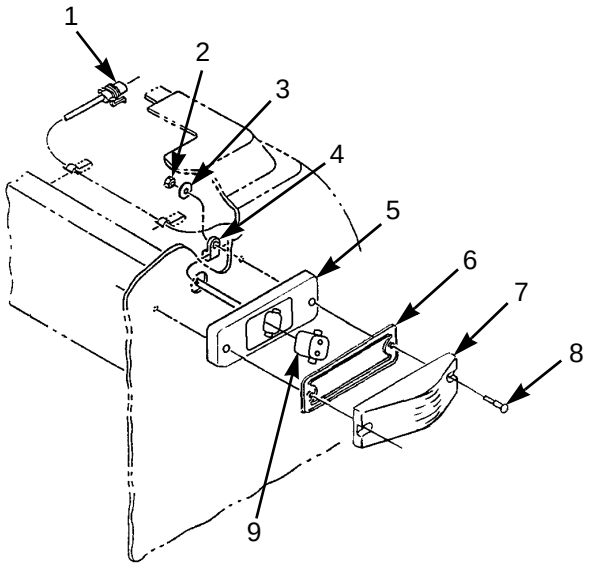

INSTALLATION

1. Position side marker/turn signal light (5) on vehicle and connect connector (1).
2. Install lamp (9) on side marker/turn signal light (5).
3. Install new gasket (6), lens cover (7), and clamp (4) on side marker/turn signal light (5) with two screws (8), washers (3), and new locknuts (2).

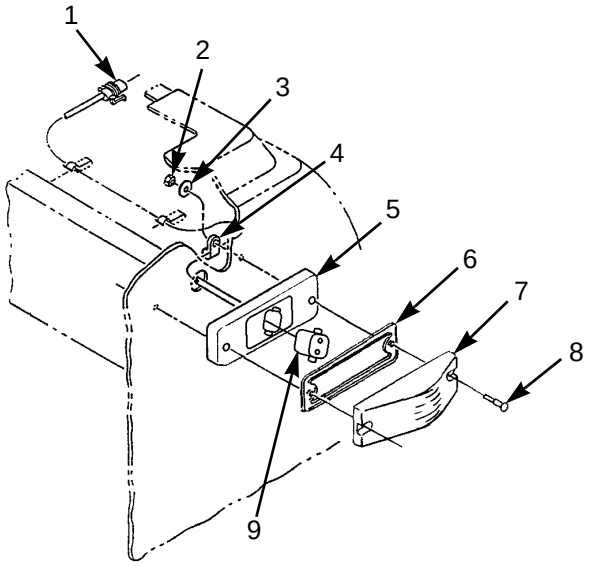

END OF WORK PACKAGE

SIDE MARKER/TURN SIGNAL LIGHT REPLACEMENT (M915A3 NEW MODEL, M916A3, M917A2) 0104 00

THIS WORK PACKAGE COVERS

Removal, Installation

INITIAL SETUP

Tools and Special Tools

Tool kit, general mechanic's (Item 50, WP 0306 00)

Equipment Condition

Master battery switch in OFF position (TM 9-2320-302-10)

REMOVAL

NOTE

Note orientation of side marker/turn signal light to ensure correct installation.

1. Remove two nuts (1) and washers (2). Push outward on side marker/turn signal light (3) and remove from front fender extension (4).
2. Disconnect jumper harness connector (5) from back of side marker/turn signal light (3) and remove light and gasket (6) from front fender extension (4).

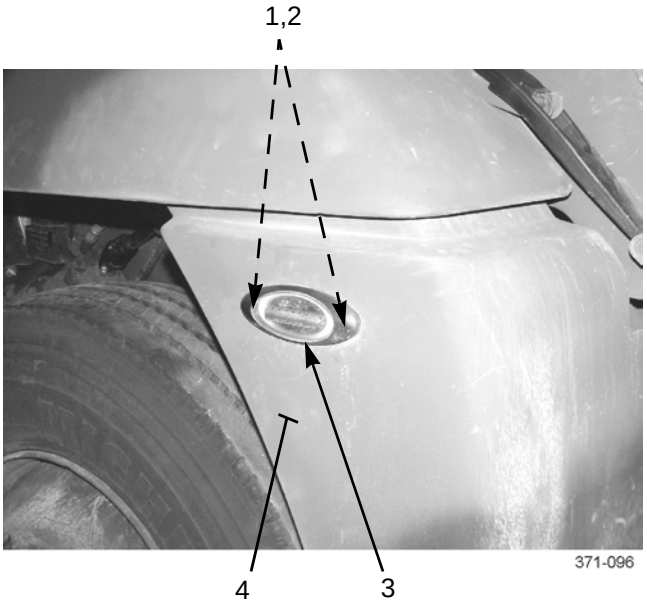

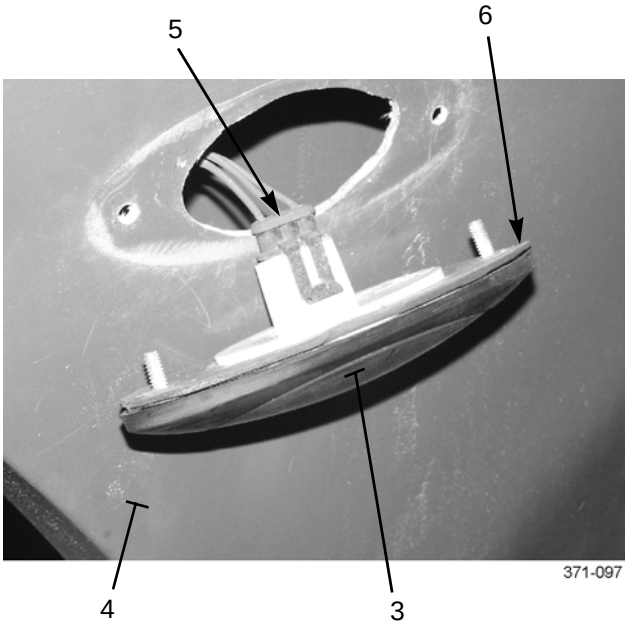

INSTALLATION

NOTE

- Replacement side marker/turn signal light comes with a gasket.
- Ensure that mounting surface for side marker/turn signal light is clean and free of old gasket material.

1. Position gasket (6) and side marker/turn signal light (3) at front fender extension (4). Connect jumper harness connector (5) to back of light.
2. Install side marker/turn signal light (3) to front fender extension (4) with two washers (2) and nuts (1).

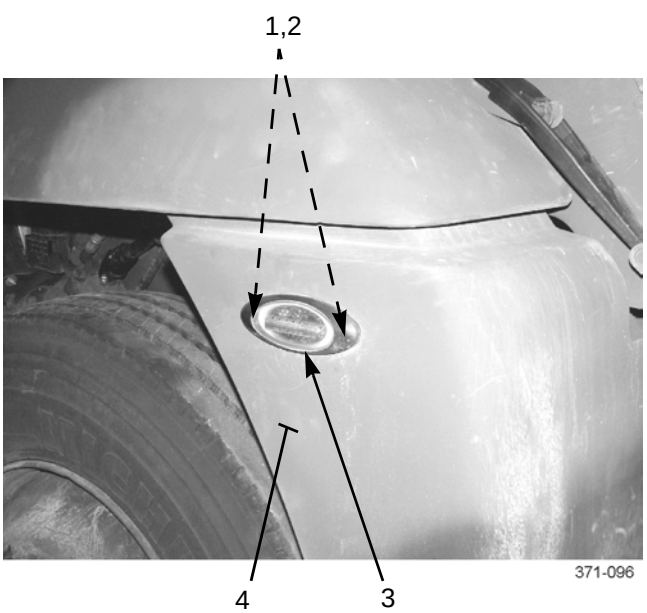

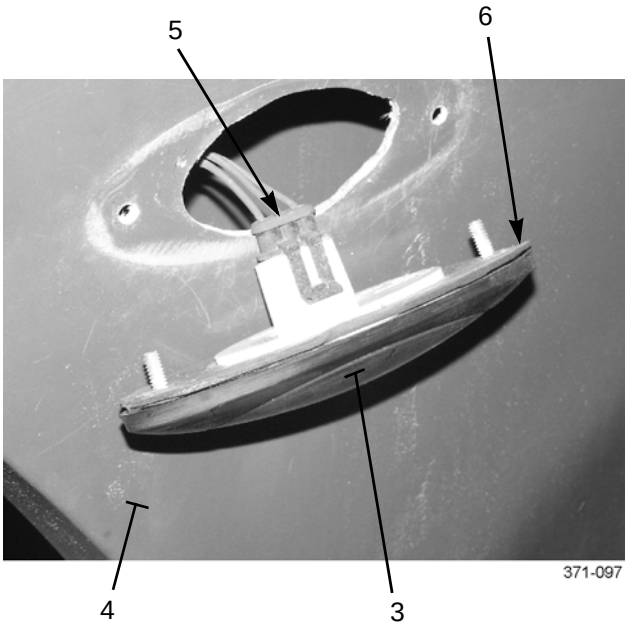

END OF WORK PACKAGE

CLEARANCE LIGHT REPLACEMENT (M915A3 OLD MODEL) 0105 00

THIS WORK PACKAGE COVERS

Removal, Installation

INITIAL SETUP

Tools and Special Tools

Tool kit, general mechanic's (Item 50, WP 0306 00)

Equipment Condition

Head liners removed (WP 0264 00)

Master battery switch in OFF position (TM 9-2320-302-10)

NOTE

Five clearance lights are replaced the same way. One clearance light is shown.

REMOVAL

1. Remove lens cover (1), lamp (2), two screws (9), and washers (8) from clearance light (3).
2. Remove clearance light (3).
3. Disconnect connector (6) and pull harness (5) through hole in cab (7).
4. Remove grommet (4) from cab (7).

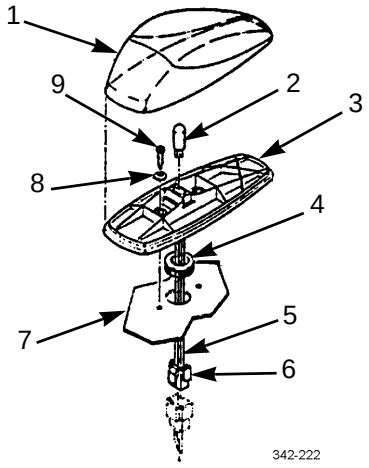

INSTALLATION

1. Install grommet (4) on cab (7).
2. Feed harness (5) through hole in cab (7).
3. Connect connector (6).
4. Install clearance light (3), two washers (8), screws (9), lamp (2), and lens cover (1).
5. Install head liners (WP 0264 00).

END OF WORK PACKAGE

CLEARANCE LIGHT REPLACEMENT (M915A3 NEW MODEL, M916A3, M917A2) 0106 00

THIS WORK PACKAGE COVERS

Removal, Installation

INITIAL SETUP

Tools and Special Tools

Tool kit, general mechanic's (Item 50, WP 0306 00)

Personnel Required

Two

Equipment Condition

Master battery switch in OFF position (TM 9-2320-302-10)

Headliner(s) removed (WP 0264 00)

REMOVAL

1. From inside cab, disconnect wiring harness connector from clearance light connector (9).
2. Remove screw (1) from lens assembly (2).
3. Remove lens assembly (2) from lens base (4) feeding clearance light connector (9) through grommet (8).
4. With assistance, remove two threaded inserts (7), screws (3), lens base (4), and gasket (5) from cab roof (6).
5. Remove grommet (7) from cab roof (6).

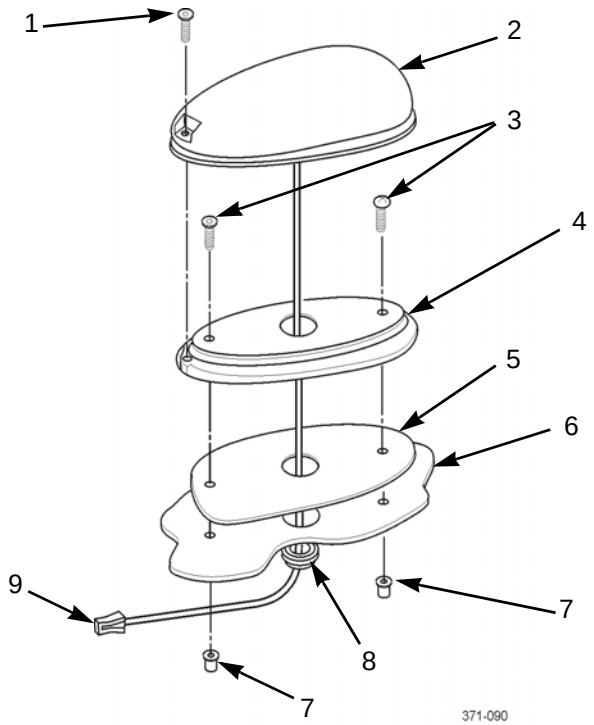

INSTALLATION

NOTE

Clearance light must be positioned with “FRONT” printed on base facing front of vehicle.

1. Position grommet (8), gasket (5), and lens base (4) on cab roof (6) with clearance light connector (9) from lens assembly (2) through opening in roof. Seat grommet in opening in roof.
2. Install two screws (3) and threaded inserts (7).
3. Connect wiring harness connector to clearance light connector (9).
4. Position lens assembly (2) on lens base (4) and install screw (1).

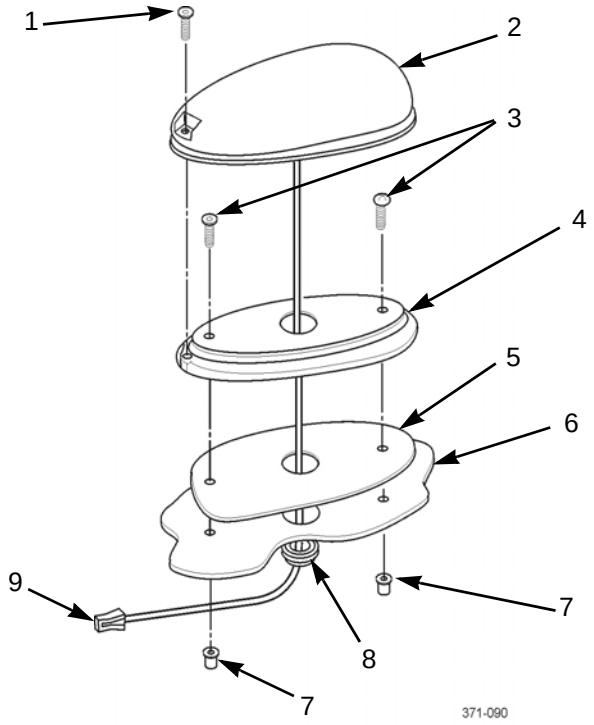

5. Install headliner(s) (WP 0264 00).

END OF WORK PACKAGE

BACKUP LIGHT REPLACEMENT (M915A3 NEW MODEL, M916A3, M917A2) 0107 00

THIS WORK PACKAGE COVERS

Removal, Installation

INITIAL SETUP

Tools and Special Tools

Tool kit, general mechanic's (Item 50, WP 0306 00)

Wrench set, socket attachment, screwdriver, torx (Item 61, WP 0306 00)

Materials/Parts

Nut, lock (P/N 23-09336-005) (3)

Equipment Condition

Master battery switch in OFF position (TM 9-2320-302-10)

REMOVAL

1. Disconnect wiring harness connector (1) from rear of backup light (2).
2. Remove three locknuts (3), washers (4), torx screws (5), and backup light (2) from bracket (6). Discard locknuts.

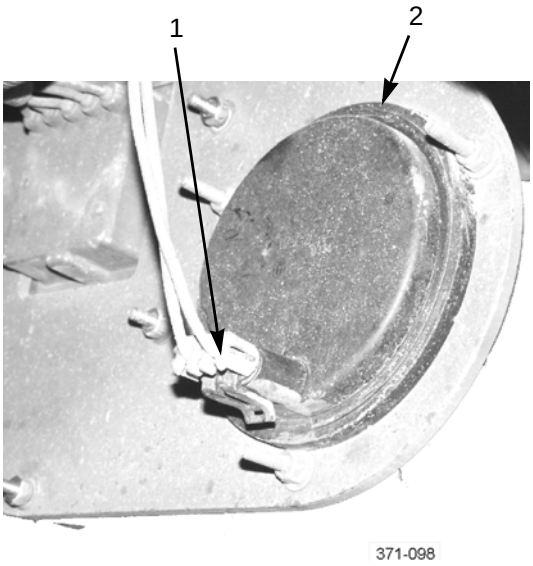

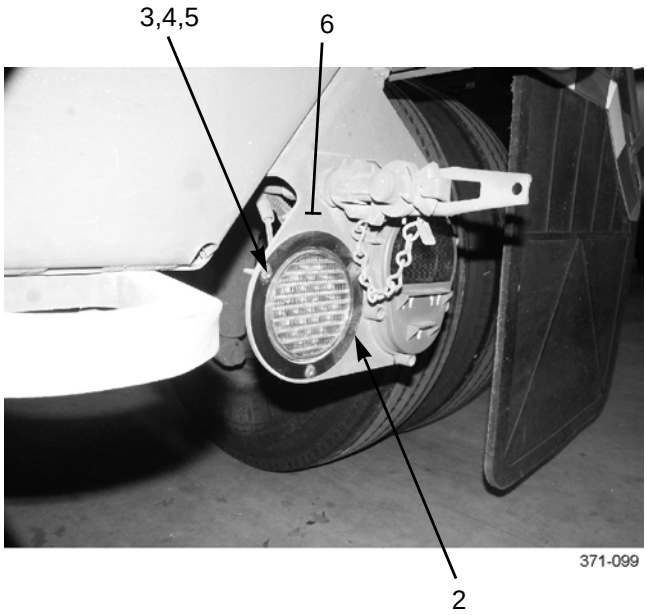

INSTALLATION

1. Install backup light (2) to bracket (6) with three torx screws (5), washers (4), and new locknuts (3).
2. Connect wiring harness connector (1) to rear of backup light (2).

END OF WORK PACKAGE

UTILITY LIGHT MAINTENANCE (M915A3 OLD MODEL) 0108 00

THIS WORK PACKAGE COVERS

Lamp Removal, Light Removal, Light Installation, Lamp Installation

INITIAL SETUP

Tools and Special Tools

Tool kit, general mechanic's (Item 50, WP 0306 00)

Materials/Parts

Nut, lock (P/N 115307A)

Nut, lock (P/N M45913/1-4CG5C) (6)

Washer, lock (P/N MS35335-36)

Personnel Required

Two

Equipment Conditions

Cab and head liners removed, if replacing light assembly bracket (WP 0264 00)

Master battery switch in OFF position (TM 9-2320-302-10)

NOTE

Right and left side utility lights are maintained the same way. Right side utility light is shown.

LAMP REMOVAL

1. Roll back rubber seal (2) edge and remove lens retainer (4) from utility light assembly (1).
2. Roll back rubber seal (2) and remove lamp (3), with two wires (5) attached, from utility light assembly (1).
3. Disconnect two wires (5) from lamp (3).

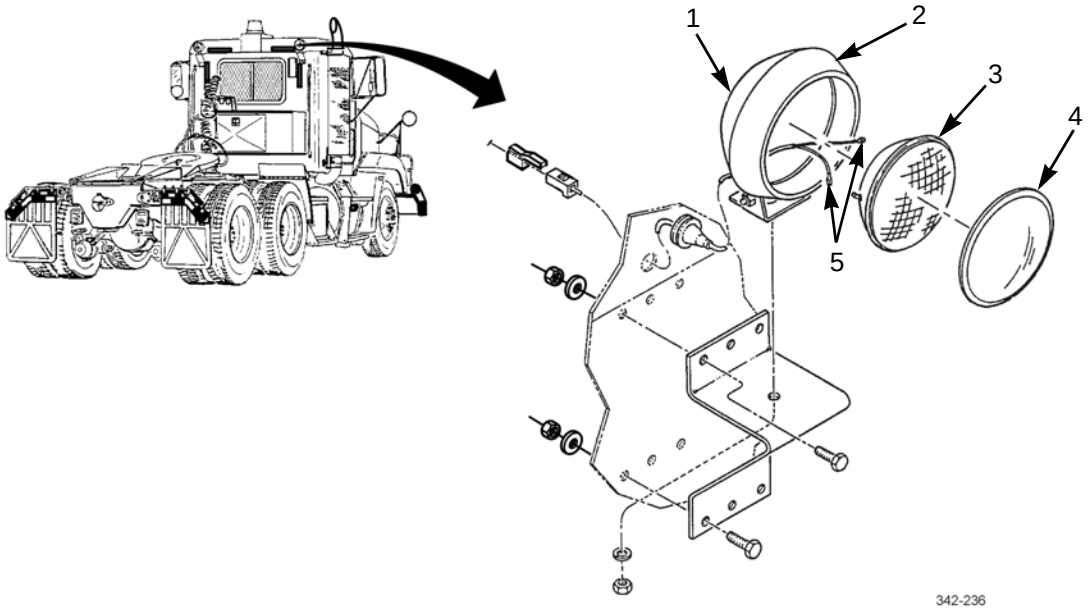

LIGHT REMOVAL

1. Disconnect utility light wiring connector (7) from cab wiring connector (6).
2. Remove rubber grommet (8) and pull utility light wiring out from inside cab.
3. Remove locknut (11), lockwasher (12), and utility light (1) from mounting bracket (10). Discard locknut and lockwasher.

NOTE

Perform step 4 only if bracket is damaged.

4. Remove six screws (9), washers (13), locknuts (14), and mounting bracket (10) from cab. Discard locknuts.

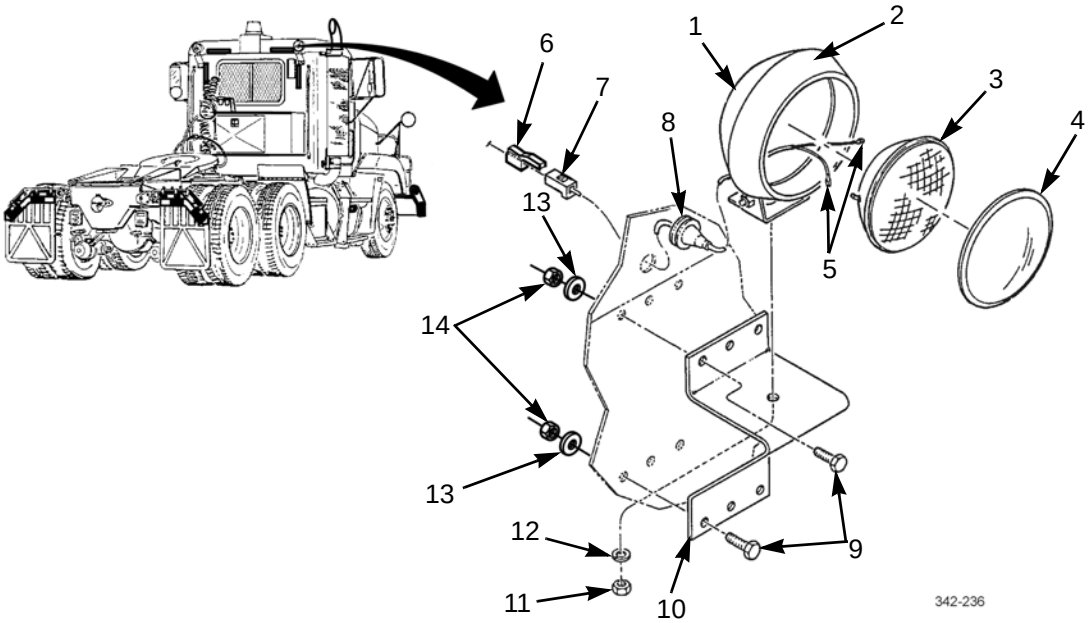

LIGHT INSTALLATION

NOTE

Perform step 1 only if mounting bracket was removed.

1. Install mounting bracket (10) on cab with six screws (9), washers (13), and new locknuts (14).
2. Install light (1) on mounting bracket (10) with new locknut (11) and lockwasher (12).
3. Feed utility light connector (7) through cab access and connect to cab wiring harness (6). Install grommet (8).

LAMP INSTALLATION

1. Connect two wires (5) to lamp (3). Position lamp in utility light assembly (1) and roll rubber seal (2) over lamp.
2. Install lens retainer (4) on utility light assembly (1) by rolling back rubber seal (2) edge around edge of lens retainer.
3. If removed, install cab and head liners (WP 0264 00).

END OF WORK PACKAGE

UTILITY LIGHT MAINTENANCE (M915A3 NEW MODEL, M916A3, M917A2) 0109 00

THIS WORK PACKAGE COVERS

Lamp: Removal, Installation

Light Assembly: Removal, Installation

INITIAL SETUP

Tools and Special Tools

Tool kit, general mechanic's (Item 50, WP 0306 00)

Materials/Parts

Caulk, strip (Item 8, WP 0305 00)

Nut, lock (P/N 115307A)

Equipment Condition

Master battery switch in OFF position (TM 9-2320-302-10)

Cab and head liners removed, if replacing light assembly bracket (WP 0264 00)

LAMP REMOVAL

1. Remove lens retainer (1) from utility light assembly (4).
2. Roll back rubber seal (3) and remove lamp (2), with two wires (5) attached, from light assembly (4).
3. Disconnect two wires (5) from rear of lamp (2) and remove lamp.

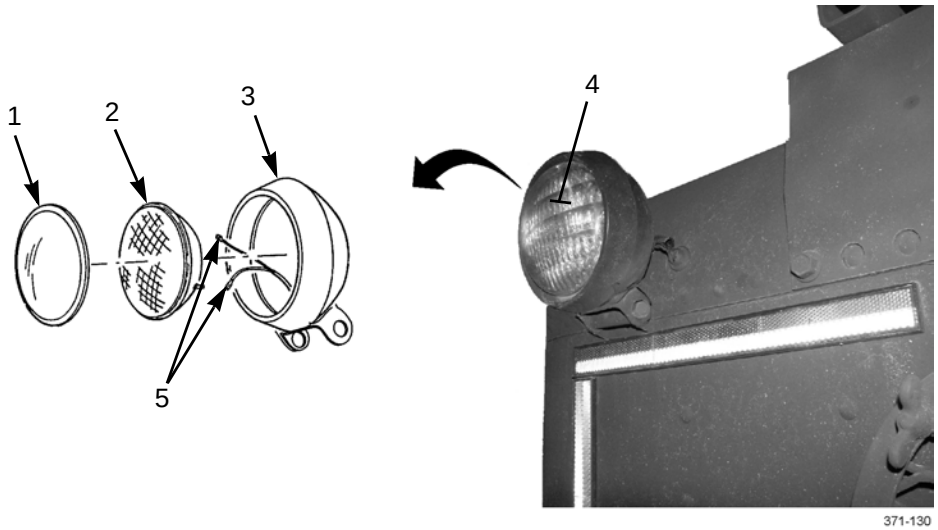

LAMP INSTALLATION

1. Connect two wires (5) to rear of lamp (2).
2. Position lamp (2) in light assembly (4) and roll rubber seal (3) over lamp.
3. Install lens retainer (1).

LIGHT ASSEMBLY REMOVAL

1. Disconnect light assembly connector (8) from wiring harness connector (9).
2. Remove grommet (6) and pull light assembly wiring out from inside cab.
3. Remove locknut (15), bolt (12), spacer (13), and light assembly (4) from bracket (7). Discard locknut.
4. If bracket (7) is damaged, remove nut (10), flatwasher (11), bolt (14), and bracket from rear of cab.

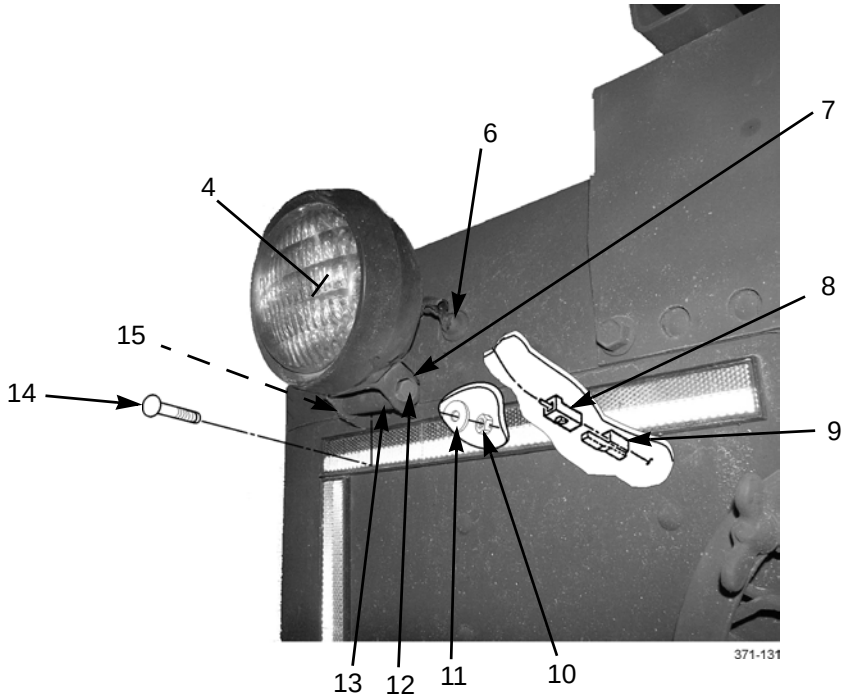

LIGHT ASSEMBLY INSTALLATION

1. If bracket (7) was removed, install bracket to rear of cab with bolt (14), flatwasher (11), and nut (10).
2. Feed light assembly connector (8) into cab.
3. Connect light assembly connector (8) to wiring harness connector (9). Seat grommet (6).
4. Position light assembly (4) on bracket (7) and install spacer (13), bolt (12), and new locknut (15).
5. As required, adjust angle of utility light assembly (4) by loosening locknut (15), adjusting position of light, then tightening locknut.
6. Apply caulk strip to provide weather tight seal for grommet (6) and wiring.
7. Install cab and head liners (WP 0264 00) if removed.

END OF WORK PACKAGE

INTERIOR LIGHT UNIT AND BULB REPLACEMENT 0110 00

THIS WORK PACKAGE COVERS

Removal, Installation

INITIAL SETUP

Tools and Special Tools

Tool kit, general mechanic's (Item 50, WP 0306 00)

Materials/Parts

Lamp, incandescent (P/N 561)

Lamp, incandescent (P/N AN3121-1816)

Equipment Condition

Master battery switch in OFF position (TM 9-2320-302-10)

REMOVAL

1. Remove two covers (7) and incandescent lamps (3 and 6) from light unit (2).
2. Remove two screws (1) and light unit (2) from mounting bracket (5).
3. Pull light unit (2) down and disconnect connector (4) from cab wiring harness.

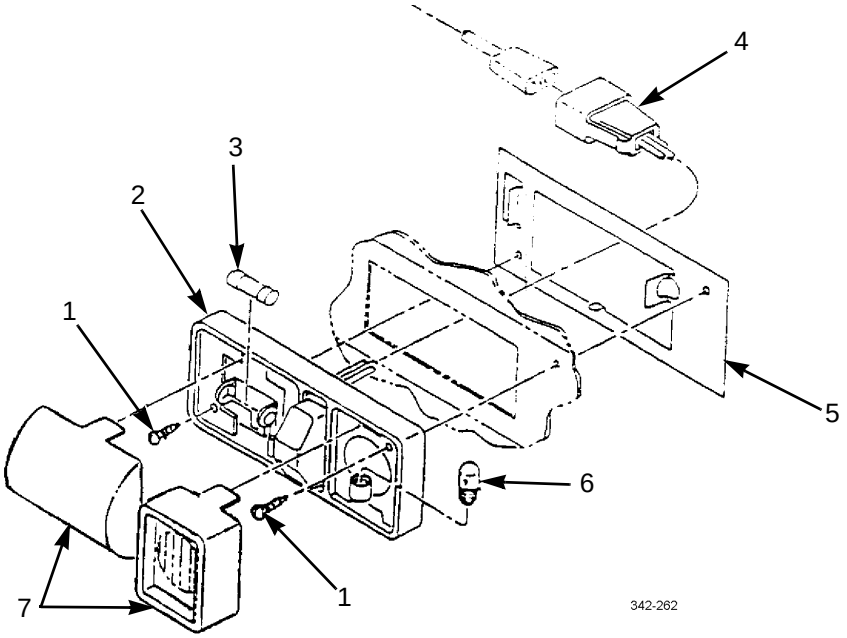

INSTALLATION

1. Connect connector (4) to cab wiring harness.
2. Install light unit (2) on mounting bracket (5) with two screws (1).
3. Install two incandescent lamps (3 and 6) on light unit (2).
4. Install two covers (7) on light unit (2).

END OF WORK PACKAGE

FUEL TEMPERATURE SENSOR REPLACEMENT 0111 00

THIS WORK PACKAGE COVERS

Removal, Installation

INITIAL SETUP

Tools and Special Tools

Tool kit, general mechanic's (Item 50, WP 0306 00)

Materials/Parts

Compound, sealing, pipe (Item 13, WP 0305 00)

Equipment Condition

Master battery switch in OFF position (TM 9-2320-302-10)

REMOVAL

1. Disconnect engine wiring harness connector (1) from fuel temperature sensor (2).
2. Remove fuel temperature sensor (2) from fitting (3).

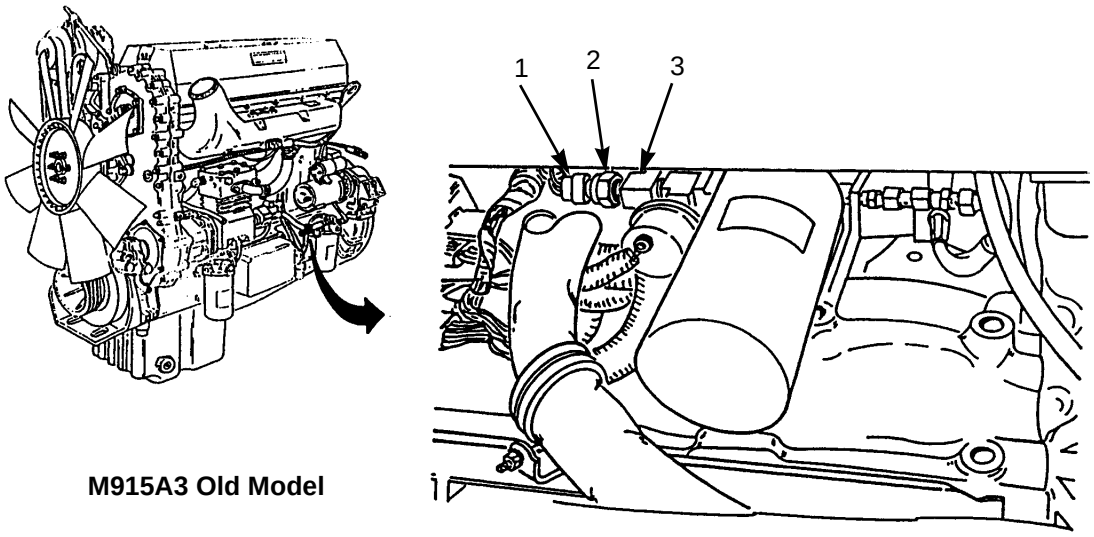

M915A3 Old Model

M915A3 New Model, M916A3, M917A2

INSTALLATION


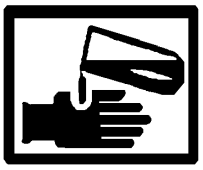

WARNING

Adhesives and sealing compounds can burn easily, can give off harmful vapors, and are harmful to skin and clothing. To avoid injury or death, keep away from open fire and use in a well-ventilated area. If adhesives or sealing compound contacts skin or clothing, wash immediately with soap and water.

CAUTION

Ensure that all fittings are clear of debris and excess pipe sealing compound does not enter fittings or fuel lines. Failure to follow this caution could result in damage to equipment.

1. Lightly coat threads of fuel temperature sensor (2) with pipe sealing compound. Install fuel temperature sensor on fitting (3).
2. Connect engine wiring harness connector (1) to fuel temperature sensor (2).

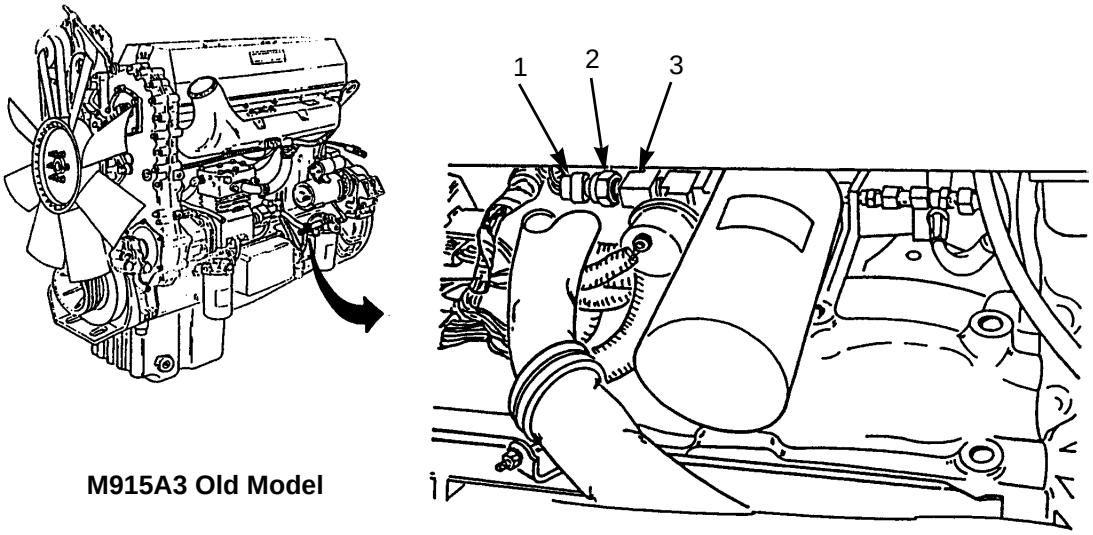

M915A3 Old Model

M915A3 New Model, M916A3, M917A2

END OF WORK PACKAGE

FUEL LEVEL SENDING UNIT REPLACEMENT 0112 00

THIS WORK PACKAGE COVERS

Removal, Installation

INITIAL SETUP

Tools and Special Tools

Tool kit, general mechanic's (Item 50, WP 0306 00)

Materials/Parts

Seal (P/N 22-27156-000)

Tags, marker (Item 34, WP 0305 00)

Equipment Condition

Master battery switch in OFF position (TM 9-2320-302-10)

REMOVAL

WARNING

- DO NOT perform fuel system checks, inspections or maintenance while smoking or near fire, flames or sparks. Fuel may ignite, causing injury or death to personnel and damage to vehicle.
- Fuel vapors are toxic. Avoid prolonged exposure or breathing of fumes. Work in a well-ventilated area. Failure to follow this warning could result in serious injury to personnel.
- Personnel must wear fuel-resistant gloves when handling fuels. If exposed to fuel, promptly wash exposed skin and change fuel-soaked clothing.

NOTE

Tag wires to aid in installation.

1. Remove screw (4), washer (5), and wire lead (6) from fuel level sending unit (9).

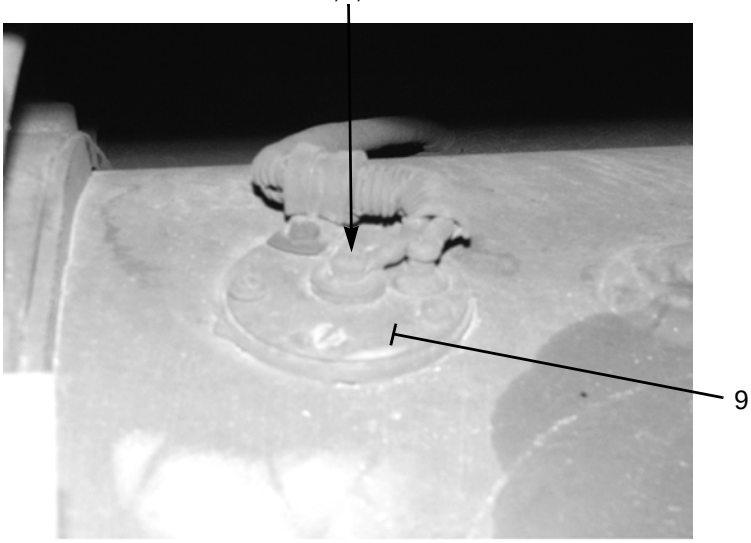

371-256

REMOVAL - CONTINUED

NOTE

Note cable and clamp position and tag wire lead to aid in installation.

2. Remove screw (7) and ground lead (8) from fuel level sending unit (9).
3. Remove screw (1), clamp (2), and cable (3) from fuel level sending unit (9).
4. Remove four remaining screws (10), fuel level sending unit (9), and seal (11). Discard seal.

INSTALLATION

1. Install new seal (11) and fuel level sending unit (9) with float toward rear of vehicle.
2. Install four screws (10).
3. Install ground lead (8) with screw (7).
4. Install wire lead (6) with washer (5) and screw (4).
5. Install clamp (2) on cable (3) and secure clamp to fuel sending unit (9) with screw (1).

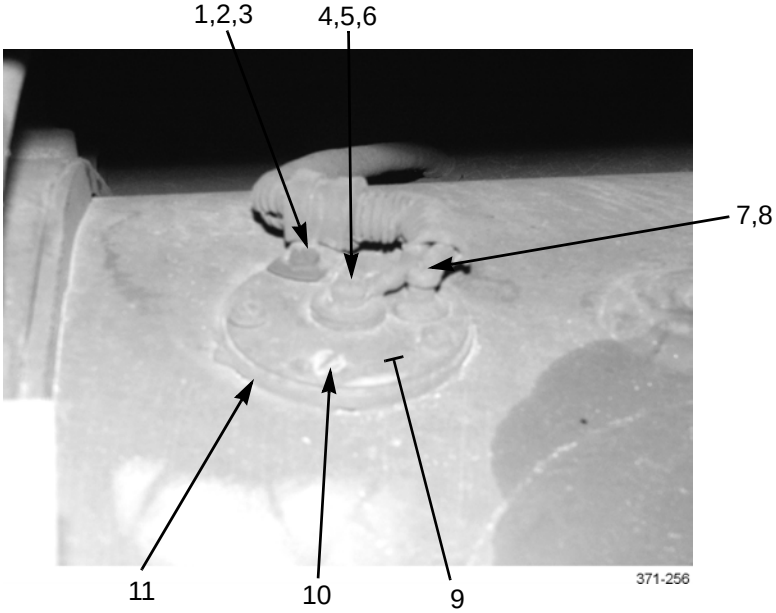

END OF WORK PACKAGE

OIL PRESSURE SENSOR REPLACEMENT 0113 00

THIS WORK PACKAGE COVERS

Removal, Installation

INITIAL SETUP

Tools and Special Tools

Tool kit, general mechanic's (Item 50, WP 0306 00)

Materials/Parts

Compound, sealing, pipe (Item 13, WP 0305 00)

Equipment Condition

Master battery switch in OFF position (TM 9-2320-302-10)

REMOVAL

1. Disconnect engine wiring harness connector (1) from oil pressure sensor (2) on left-rear side of engine.
2. Remove oil pressure sensor (2) from engine block (3).

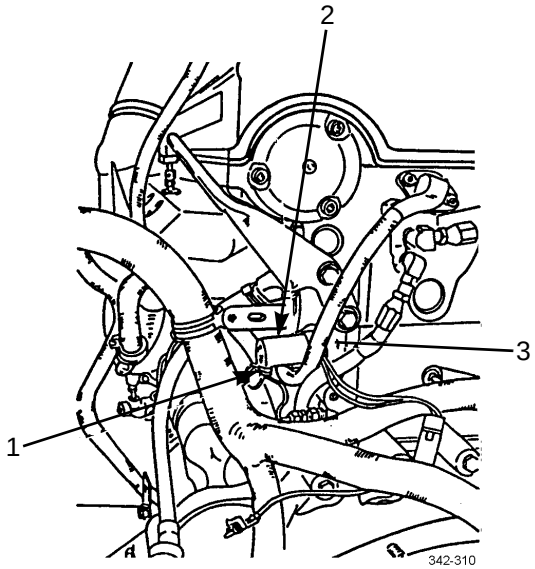

INSTALLATION


WARNINGS

Adhesives and sealing compounds can burn easily, can give off harmful vapors, and are harmful to skin and clothing. To avoid injury or death, keep away from open fire and use in a well-ventilated area. If adhesives or sealing compound contacts skin or clothing, wash immediately with soap and water.

CAUTION

Ensure that all fittings are clear of debris and excess pipe sealing compound does not enter fittings or lines. Failure to follow this caution could result in damage to equipment.

1. Lightly coat threads of oil pressure sensor (2) with pipe sealing compound. Install oil pressure sensor in engine block (3).
2. Connect engine wiring harness connector (1) to oil pressure sensor (2).

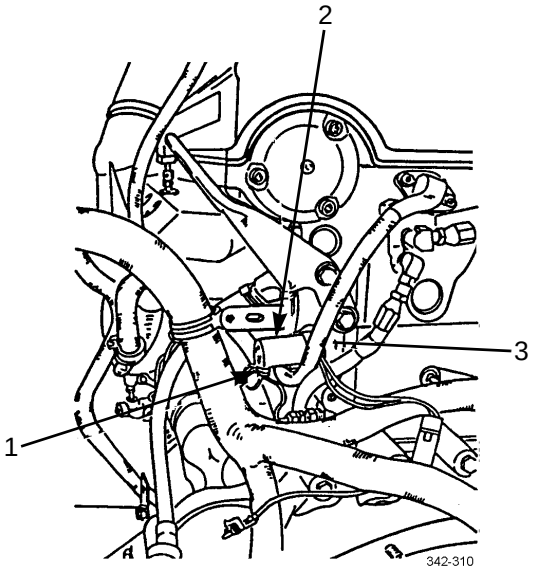

END OF WORK PACKAGE

OIL TEMPERATURE SENSOR REPLACEMENT 0114 00

THIS WORK PACKAGE COVERS

Removal, Installation

INITIAL SETUP

Tools and Special Tools

Tool kit, general mechanic's (Item 50, WP 0306 00)

Materials/Parts

Compound, sealing, pipe (Item 13, WP 0305 00)

Equipment Condition

Master battery switch in OFF position (TM 9-2320-302-10)

REMOVAL

1. Disconnect engine wiring harness connector (1) from oil temperature sensor (2) one left-rear side of engine.
2. Remove oil temperature sensor (2) from engine block (3).

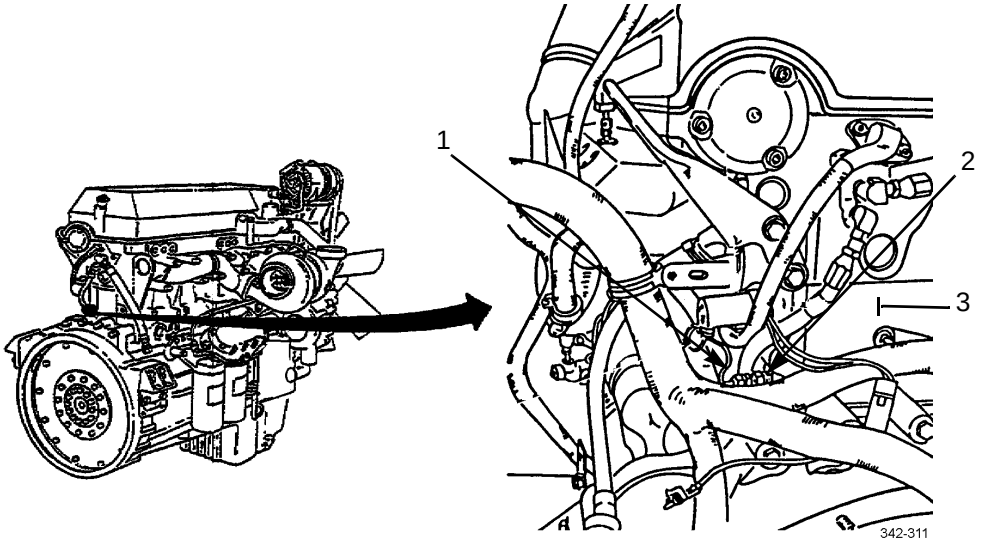

INSTALLATION


WARNING

Adhesives and sealing compounds can burn easily, can give off harmful vapors, and are harmful to skin and clothing. To avoid injury or death, keep away from open fire and use in a well-ventilated area. If adhesives or sealing compound contacts skin or clothing, wash immediately with soap and water.

CAUTION

Ensure that fittings are clear of debris and excess pipe sealing compound does not enter fittings or lines. Failure to follow this caution could result in damage to equipment.

1. Lightly coat threads of oil temperature sensor (2) with pipe sealing compound. Install oil temperature sensor on engine block (3).
2. Connect engine wiring harness connector (1) to oil temperature sensor (2).

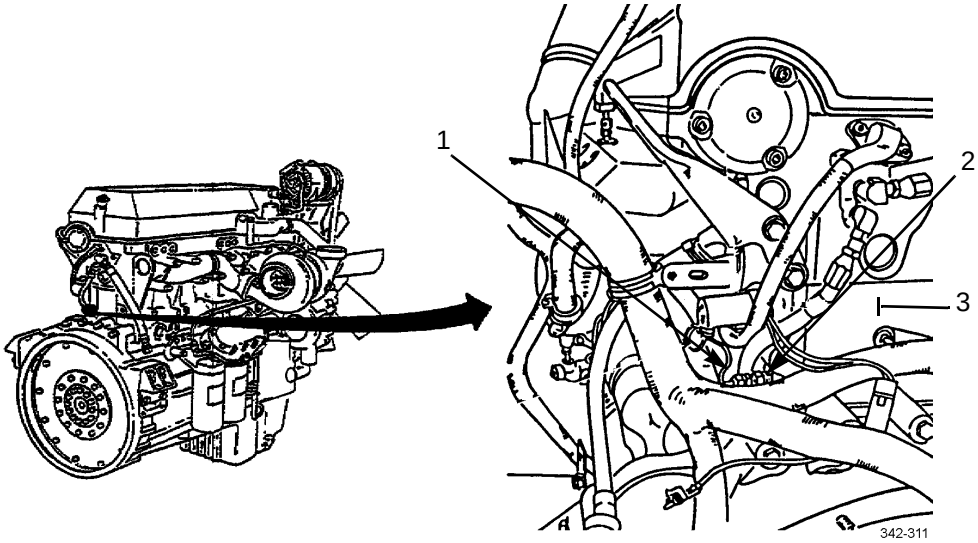

END OF WORK PACKAGE

OIL PRESSURE SENDING UNIT REPLACEMENT 0115 00

THIS WORK PACKAGE COVERS

Removal, Installation

INITIAL SETUP

Tools and Special Tools

Tool kit, general mechanic's (Item 50, WP 0306 00)

Materials/Parts

Compound, sealing, pipe (Item 13, WP 0305 00)

Equipment Condition

Cab air junction block removed (WP 0191 00)

Master battery switch in OFF position (TM 9-2320-302-10)

REMOVAL

1. Depress collar (6) and remove air line (5) from fitting (1).
2. Remove fitting (1) from cab air junction block (2).
3. Disconnect electrical connector (4) from oil pressure sending unit (3).
4. Remove oil pressure sending unit (3) from cab air junction block (2).

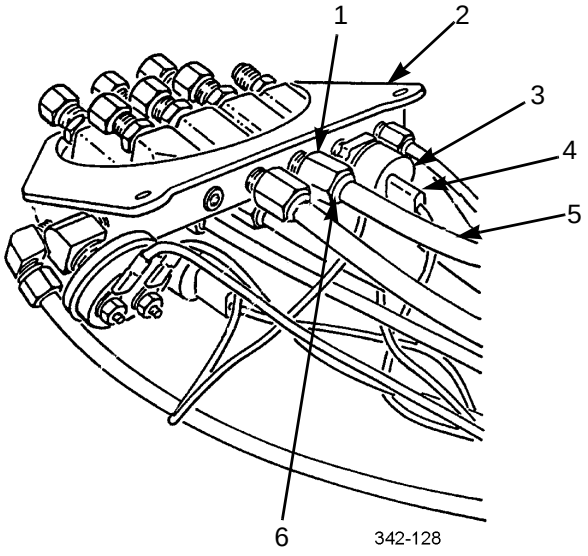

INSTALLATION

- Adhesives and sealing compounds can burn easily, can give off harmful vapors, and are harmful to skin and clothing. To avoid injury or death, keep away from open fire and use in a well-ventilated area. If adhesives or sealing compound contacts skin or clothing, wash immediately with soap and water.
- Ensure that all air lines and fittings are clear of debris and excess pipe sealing compound does not enter air lines or fittings. Failure follow this warning could result in injury to personnel or damage to equipment.

1. Lightly coat threads of oil pressure sending unit (3) with pipe sealing compound. Install sending unit on cab air junction block (2).
2. Connect electrical connector (4) to oil pressure sending unit (3).
3. Lightly coat threads of fitting (1) with sealing compound. Install fitting on cab air junction block (2).
4. Install air line (5) on fitting (1), completely in collar (6).

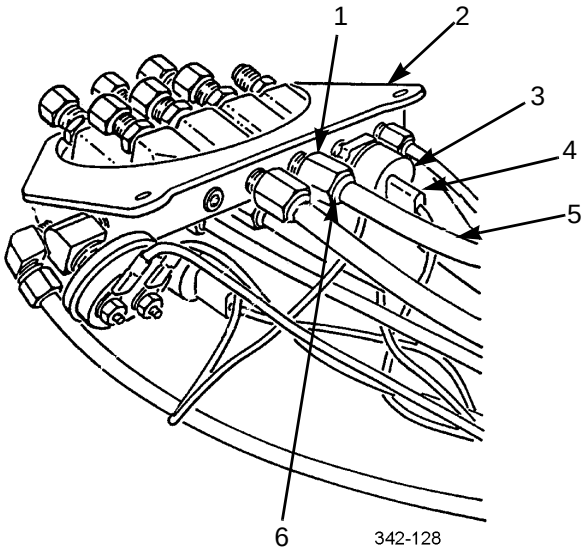

5. Install cab air junction block (WP 0191 00).

END OF WORK PACKAGE

COOLANT TEMPERATURE SENSOR REPLACEMENT 0116 00

THIS WORK PACKAGE COVERS

Removal, Installation

INITIAL SETUP

Tools and Special Tools

Tool kit, general mechanic's (Item 50, WP 0306 00)

Materials/Parts

Compound, pipe sealing (Item 13, WP 0305 00)

Straps, tiedown (Item 33, WP 0305 00)

Equipment Condition

Cooling system drained (WP 0046 00)

Master battery switch in OFF position (TM 9-2320-302-10)

REMOVAL

NOTE

Cut tiedown strap and discard. Use a new tiedown strap on installation.

1. On right-rear side of engine block (3), disconnect wiring harness connector (1) from coolant temperature sensor (2).
2. Remove coolant temperature sensor (2) from engine block (3).

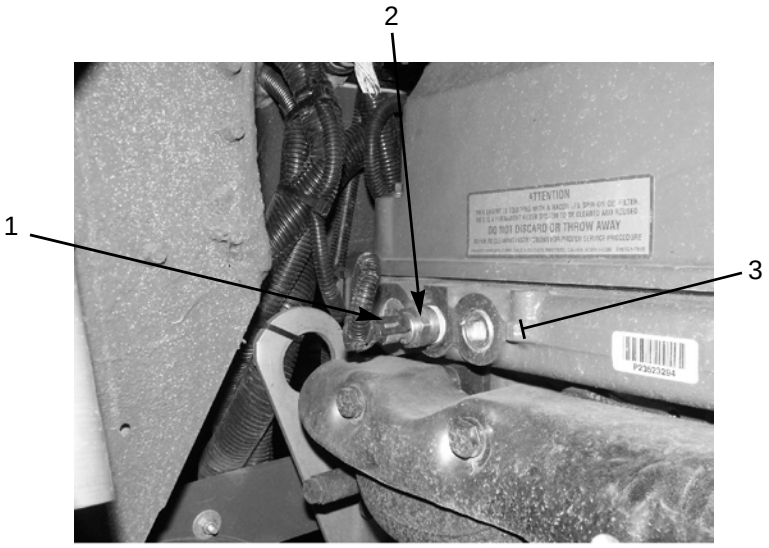

371-101

INSTALLATION

WARNING

Adhesives and sealing compounds can burn easily, can give off harmful vapors, and are harmful to skin and clothing. To avoid injury or death, keep away from open fire and use in a well-ventilated area. If adhesives or sealing compound contacts skin or clothing, wash immediately with soap and water.

NOTE

Apply a thin coat of pipe sealing compound to male threads of sensor before sensor is installed.

1. Install coolant temperature sensor (2) to engine block (3).
2. Connect wiring harness connector (1) to coolant temperature sensor (2).

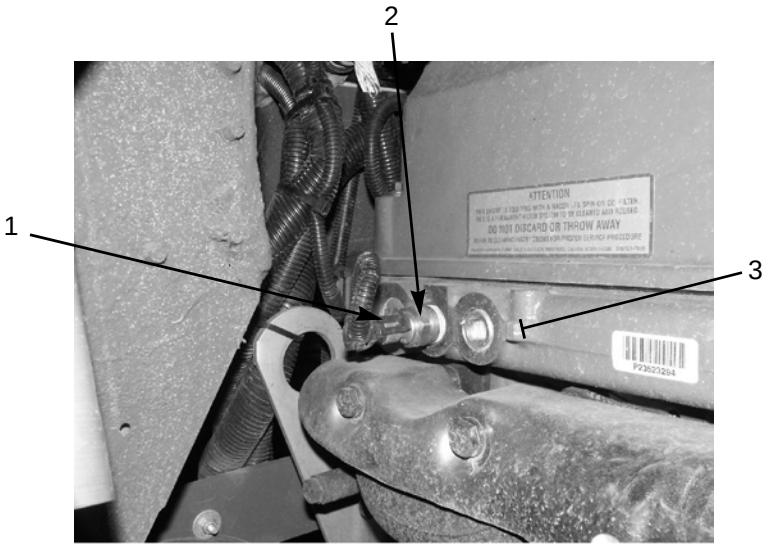

371-101

3. Fill cooling system (WP 0046 00).

END OF WORK PACKAGE

AIR TEMPERATURE SENSOR REPLACEMENT 0117 00

THIS WORK PACKAGE COVERS

Removal, Installation

INITIAL SETUP

Tools and Special Tools

Tool kit, general mechanic's (Item 50, WP 0306 00)

Materials/Parts

Compound, sealing, pipe (Item 13, WP 0305 00)

Equipment Condition

Master battery switch in OFF position (TM 9-2320-302-10)

REMOVAL

1. On left side of engine, disconnect wiring harness connector (1) from sensor (2).
2. Remove sensor (2) from intake manifold (3).

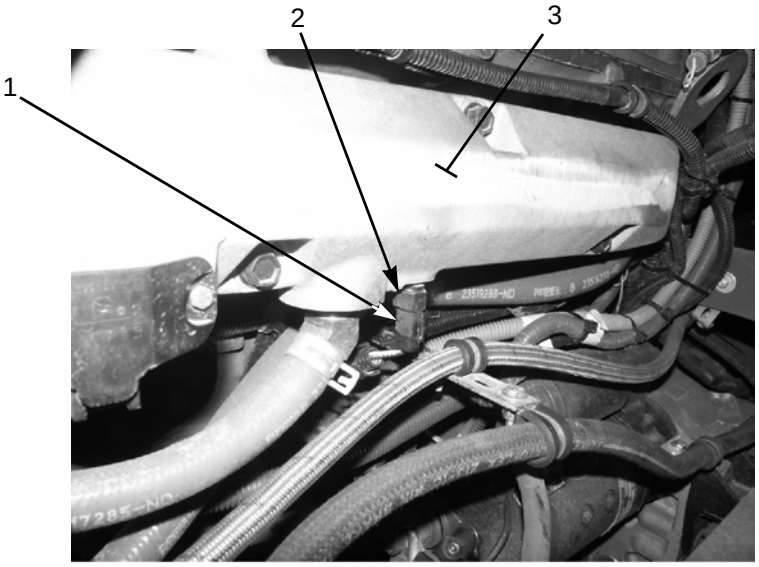

371-143

INSTALLATION


WARNING

Adhesives and sealing compounds can burn easily, can give off harmful vapors, and are harmful to skin and clothing. To avoid injury or death, keep away from open fire and use in a well-ventilated area. If adhesives or sealing compound contacts skin or clothing, wash immediately with soap and water.

1. Lightly coat threads of sensor (2) with pipe sealing compound.
2. Install sensor (2) on intake manifold (3).
3. Connect wiring harness connector (1) to sensor (2).

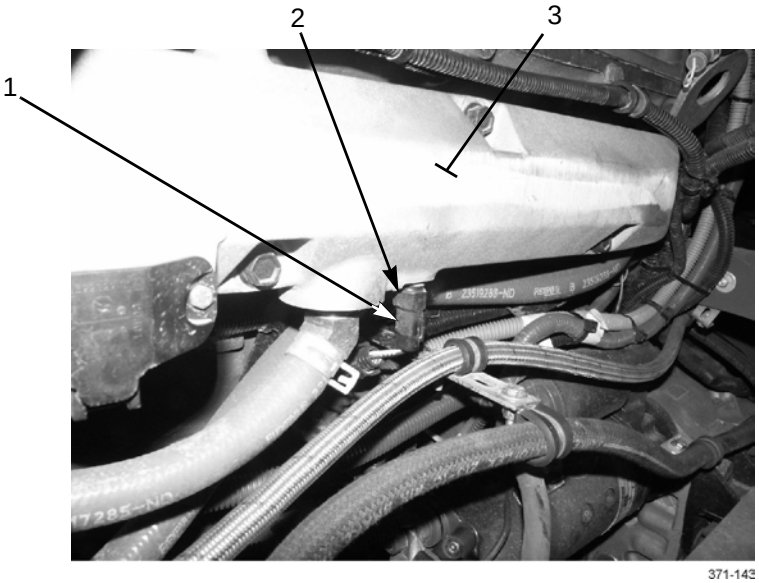

END OF WORK PACKAGE

TURBO BOOST SENSOR REPLACEMENT 0118 00

THIS WORK PACKAGE COVERS

Removal, Installation

INITIAL SETUP

Tools and Special Tools

Tool kit, general mechanic's (Item 50, WP 0306 00)

Wrench, torque, 0-200 lb-in (Item 55, WP 0306 00)

Materials/Parts

Seal (P/N 5182977)

Equipment condition

Master battery switch in OFF position (TM 9-2320-302-10)

REMOVAL

1. On left side of engine, disconnect engine wiring harness connector (1) from turbo boost sensor (2).
2. Remove two capscrews (3), turbo boost sensor (2), and seal (4) from intake manifold (5).

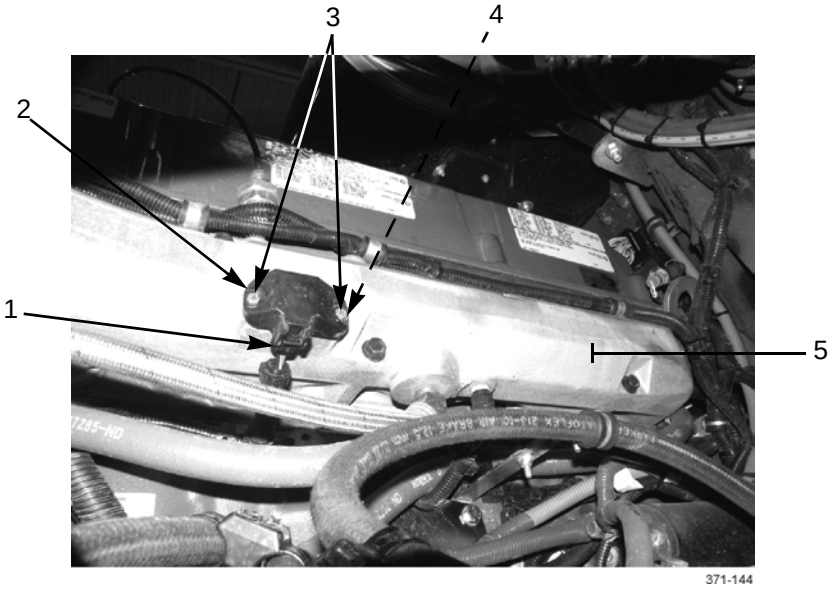

INSTALLATION

1. Install new seal (4) and turbo boost sensor (2) on intake manifold (5) with two capscrews (3). Torque capscrews to 21-26 lb-in (2.4-3.0 Nm).
2. Connect engine wiring harness connector (1) to turbo boost sensor (2).

END OF WORK PACKAGE

SYNCHRONOUS REFERENCE SENSOR REPLACEMENT 0119 00

THIS WORK PACKAGE COVERS

Removal, Installation

INITIAL SETUP

Tools and Special Tools

Tool kit, general mechanic's (Item 50, WP 0306 00)

Wrench, torque, 15-75 lb-ft (Item 57, WP 0306 00)

Equipment Condition

Master battery switch in OFF position (TM 9-2320-302-10)

Coolant hose disconnected from engine block (WP 0031 00)

REMOVAL

1. On forward left side of engine, disconnect engine wiring harness connector (1) from synchronous reference sensor (2).
2. Remove capscrew (4) and synchronous reference sensor (2) from gear housing assembly (3).

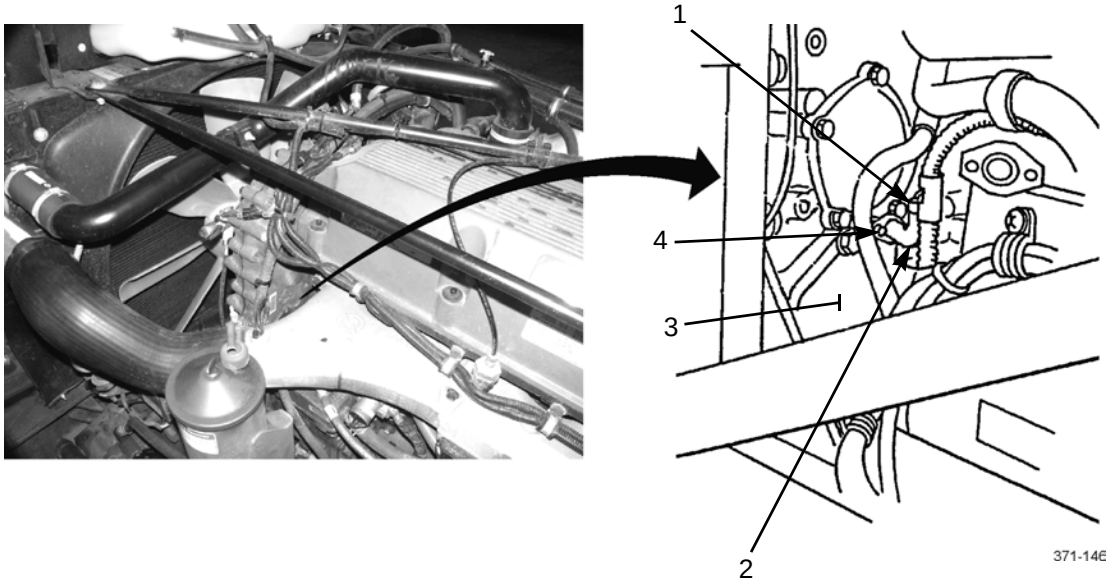

INSTALLATION

1. Install synchronous reference sensor (2) in gear housing assembly (3) with capscrew (4). Tighten capscrew to 22-28 lb-ft (30-38 Nm).
2. Connect engine wiring harness connector (1) to synchronous reference sensor (2).
3. Connect coolant hose to engine block (WP 0031 00).

END OF WORK PACKAGE

TIMING REFERENCE SENSOR REPLACEMENT 0120 00

THIS WORK PACKAGE COVERS

Removal, Installation

INITIAL SETUP

Tools and Special Tools

Tool kit, general mechanic's (Item 50, WP 0306 00)

Wrench, torque, 15-75 lb-ft (Item 57, WP 0306 00)

Equipment Condition

Master battery switch in OFF position (TM 9-2320-302-10)

REMOVAL

1. On forward left side of engine, disconnect engine wiring harness connector (1) from timing reference sensor (2).
2. Remove capscrew (3) and timing reference sensor (2) from gear housing assembly (4).

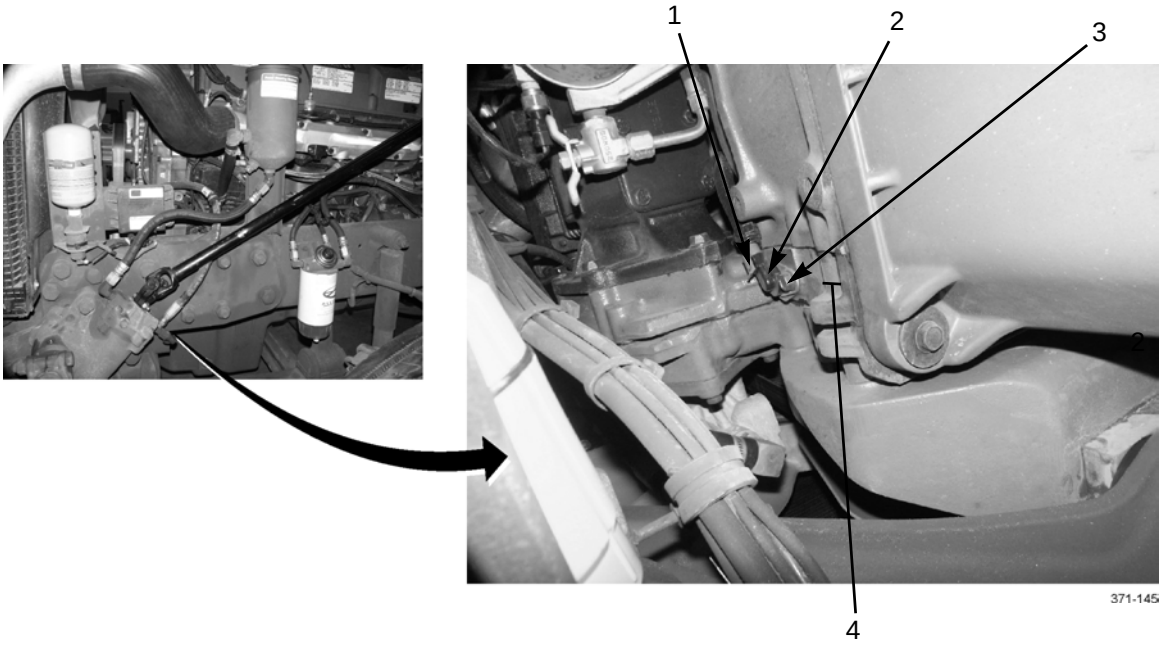

INSTALLATION

1. Install timing reference sensor (2) in gear housing assembly (4) with capscrew (3). Tighten capscrew to 22-28 lb-ft (30-38 Nm).
2. Connect engine wiring harness connector (1) to timing reference sensor (2).

END OF WORK PACKAGE

AIR PRESSURE SENDING UNITS (PRIMARY/SECONDARY) REPLACEMENT 0121 00

THIS WORK PACKAGE COVERS

Removal, Installation

INITIAL SETUP

Tools and Special Tools

Tool kit, general mechanic's (Item 50, WP 0306 00)

Materials/Parts

Compound, sealing, pipe (Item 13, WP 0305 00)

Tags, marker (Item 34, WP 0305 00)

Equipment Condition

Air system drained (TM 9-2320-302-10)

Master battery switch in OFF position (TM 9-2320-302-10)

REMOVAL

NOTE

Tag air lines and wires to aid in installation.

1. Remove three screws (1) and washers (2) to separate lower dash cover (3) from dashboard.
2. Remove five screws (4), washers (5), and cover (6).

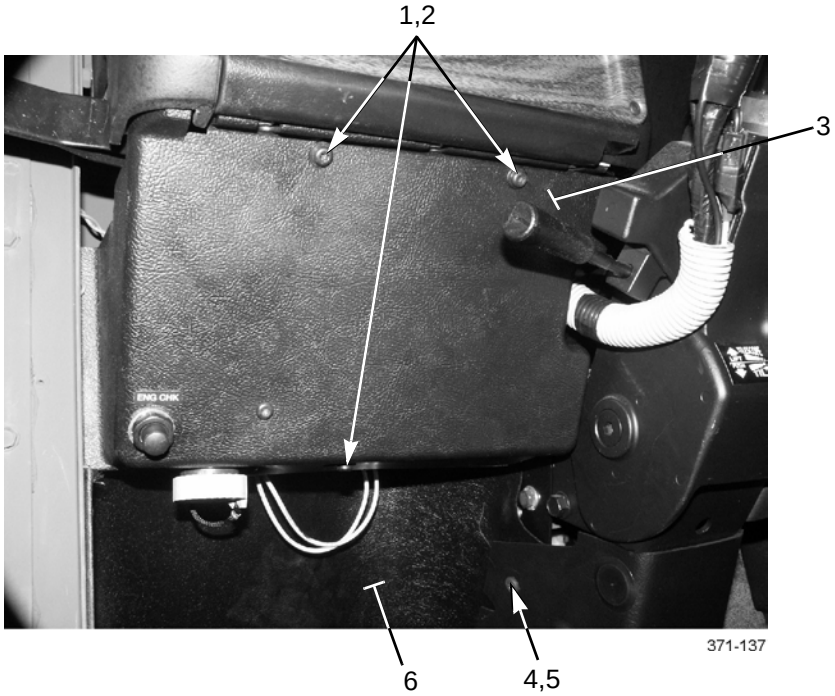

NOTE

If necessary, remove cab air junction block (WP 0191 00) for access to sensors.

REMOVAL - CONTINUED

NOTE

Perform steps 3 through 5 to remove primary air pressure sending unit.

3. Remove two air lines (10) and fittings (15) from cab air junction block (14).
4. Disconnect two electrical connectors (11 and 12) from primary air pressure sending unit (13).
5. Remove primary air pressure sending unit (13) from cab air junction block (14).

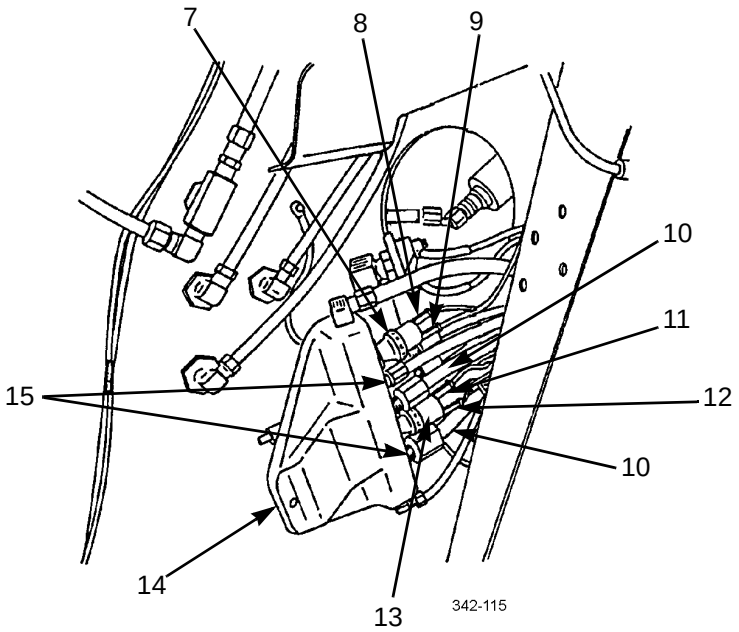

NOTE

Perform steps 6 and 7 to remove secondary air pressure sending unit.

6. Disconnect two electrical connectors (8 and 9) from secondary air pressure sending unit (7).
7. Remove secondary air pressure sending unit (7) from cab air junction block (14).

INSTALLATION


WARNING

- Adhesives and sealing compounds can burn easily, can give off harmful vapors, and are harmful to skin and clothing. To avoid injury or death, keep away from open fire and use in a well-ventilated area. If adhesives or sealing compound gets on skin or clothing, wash immediately with soap and water.
- Ensure that all air lines and fittings are clear of debris and excess pipe sealing compound does not enter air lines or fittings. Failure to follow this warning could result in injury to personnel or damage to equipment.

INSTALLATION - CONTINUED

NOTE

Perform steps 1 and 2 to install secondary air pressure sending unit.

1. Lightly coat threads of secondary air pressure sending unit (7) with pipe sealing compound. Install sending unit on cab air junction block (14).
2. Connect two electrical connectors (8 and 9) to secondary air pressure sending unit (7).

NOTE

Perform steps 3 through 6 to install primary air pressure sending unit.

3. Lightly coat threads of primary air pressure sending unit (13) with pipe sealing compound. Install sending unit on air junction block (14).
4. Connect two electrical connectors (11 and 12) to primary air pressure sending unit (13).
5. Lightly coat threads of two fittings (15) with pipe sealing compound. Install fittings on cab air junction block (14).
6. Install two air lines (10) on fittings (15).
7. If removed, install cab air junction block (WP 0191 00).
8. Install cover (6) with five washers (5) and screws (4).
9. Install cover (3) with three washers (2) and screws (1).

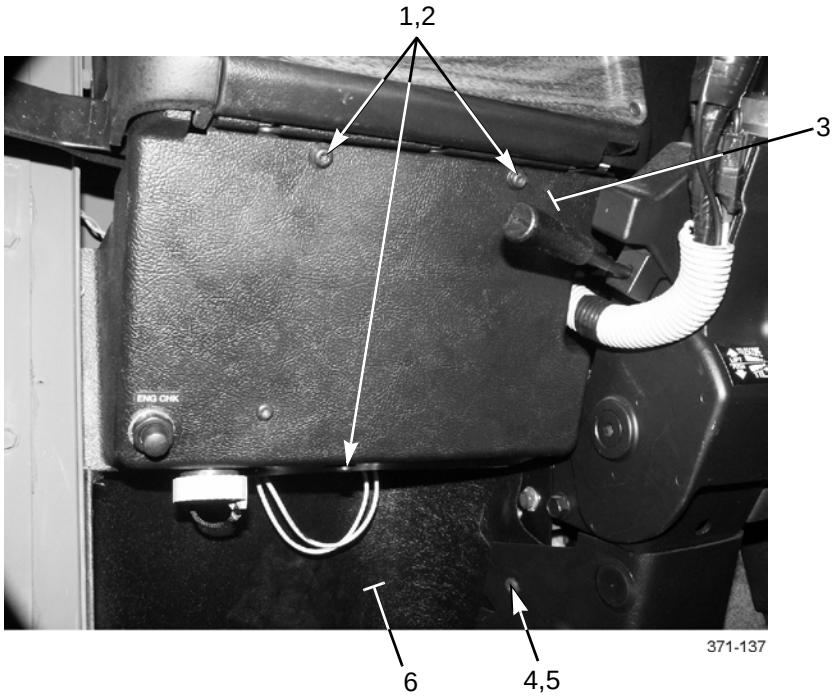

END OF WORK PACKAGE

FRONT ANTI-LOCK BRAKE SYSTEM (ABS) SENSOR REPLACEMENT 0122 00

THIS WORK PACKAGE COVERS

Removal, Installation (M915A3); Removal, Installation (M916A3, M917A2)

INITIAL SETUP

Tools and Special Tools

Tool kit, general mechanic's (Item 50, WP 0306 00)

Materials/Parts

Grease, molybdenum disulfide (Item 20, WP 0305 00)

Straps, tiedown (Item 33, WP 0305 00)

Bushing (P/N 10-12332-000)

Equipment Condition

Master battery switch in OFF position (TM 9-2320-302-10)

Hood opened (TM 9-2320-302-10)

Front hub and drum removed (M916A3, M917A2) (WP 0208 00)

NOTE

- Right- and left-front ABS sensors are replaced the same way. Left-front ABS sensor is shown.
- Note location of tiedown straps to aid in installation.

REMOVAL (M915A3)

1. Trace ABS sensor cable (2) from wheel to other end of cable and remove all tiedown straps (1). Discard tiedown straps.

REMOVAL (M915A3) - CONTINUED

2. Remove clamp (4) from ABS sensor connector (5) and wiring harness connector (3).
3. Disconnect ABS sensor connector (5) from wiring harness connector (3).

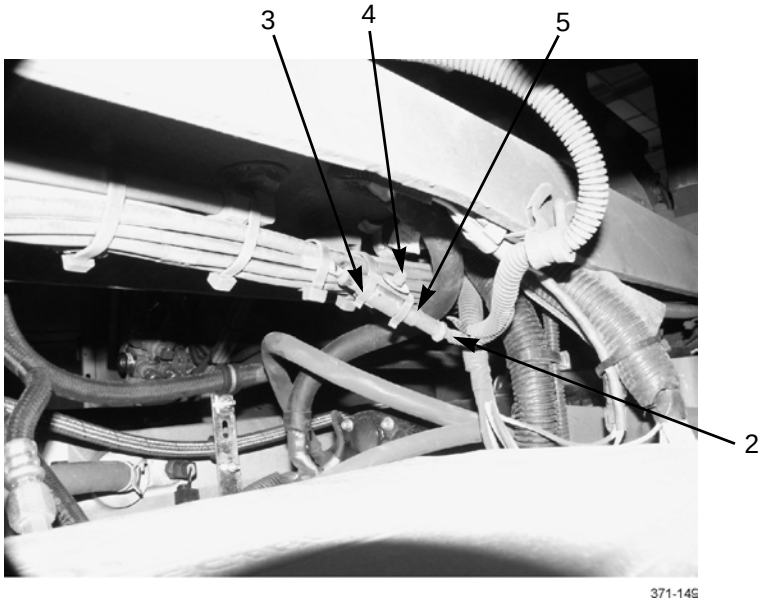

4. At wheel, carefully pull body of ABS sensor (8) from steering knuckle (7) and remove sensor with ABS sensor cable (2) from vehicle.
5. Remove bushing (6) from steering knuckle (7). Discard bushing.

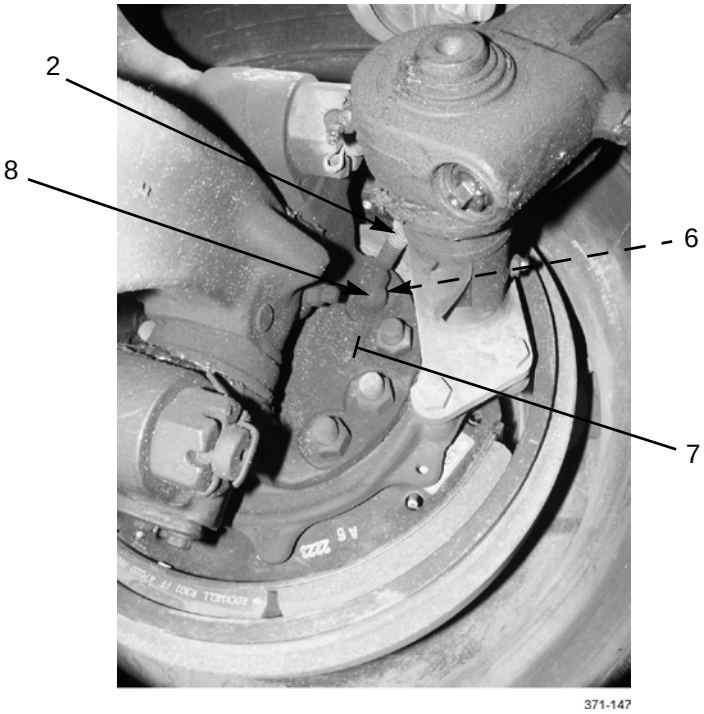

INSTALLATION (M915A3)

WARNING

Brakeshoe linings and inside drum friction surface must be free of all oil/grease and other contaminants prior to assembly to ensure maximum braking capability. Oil/grease and other contaminants may compromise braking that could lead to a serious accident resulting in injury and/or death.

1. Install new bushing (6) to steering knuckle (7).
2. Lightly coat outside of ABS sensor (8) with grease.
3. Carefully push body of ABS sensor (8) on steering knuckle (7) until sensor is stopped by ABS tone ring.

NOTE

Ensure that wire loom is installed around ABS sensor cable.

4. At other end of ABS sensor cable (2), connect ABS sensor connector (5) to wiring harness connector (3).
5. Install clamp (4) over ABS sensor connector (5) and wiring harness connector (3).
6. Along routing of ABS sensor cable (2), install new tiedown straps (1) to secure cable in position.

REMOVAL (M916A3, M917A2)

1. Trace ABS Sensor cable (1) to opposite end and remove all tiedown straps. Discard tiedown straps.
2. Disconnect connector at other end of ABS sensor cable (1).
3. Pull body of ABS sensor (2) from bracket (6) and sensor bushing (5).
4. Remove sensor bushing (5) from bracket (6).
5. Remove two bolts (4) and bracket (6) from brake spider (3).

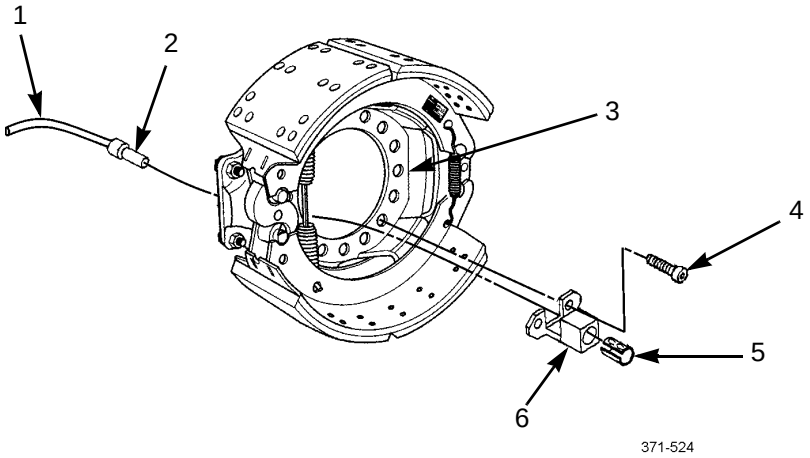

INSTALLATION (M916A3, M917A2)

WARNING

Brakeshoe linings and inside drum friction surface must be free of all oil/grease and other contaminants prior to assembly to ensure maximum braking capability. Oil/grease and other contaminants may compromise braking that could lead to a serious accident resulting in injury and/or death.

1. Position bracket (6) on brake spider (3) and install two bolts (4).
2. Install sensor bushing (5) on bracket (6).
3. Lightly coat outside of ABS sensor (2) with grease.
4. Press body of ABS sensor (2) into bracket (6).
5. Route and connect opposite end of ABS sensor cable (1).
6. Install tiedown straps in same position as removal.
7. Install front hub and drum (WP 0208 00).

END OF WORK PACKAGE

REAR ANTI-LOCK BRAKE SYSTEM (ABS) SENSOR REPLACEMENT 0123 00

THIS WORK PACKAGE COVERS

Removal, Installation

INITIAL SETUP

Tools and Special Tools

Tool kit, general mechanic's (Item 50, WP 0306 00)

Materials/Parts

Grease, molybdenum disulfide (Item 20, WP 0305 00)

Straps, tiedown (Item 33, WP 0305 00)

Personnel Required

Two

Equipment Condition

Master battery switch in OFF position (TM 9-2320-302-10)

Rear dual wheels removed (TM 9-2320-302-10)

NOTE

- Rear ABS sensors are located on rear-rear axle only.
- Right- and left-rear ABS sensors are replaced the same way. Left-rear ABS sensor is shown.
- Note location of tiedown straps to aid in installation.

REMOVAL

1. Trace ABS sensor cable (1) from wheel to other end of cable and remove all tiedown straps (6). Discard tiedown straps.
2. Remove nut (3), screw (4), clamp (2), and release ABS sensor cable (1) from air lines (5).

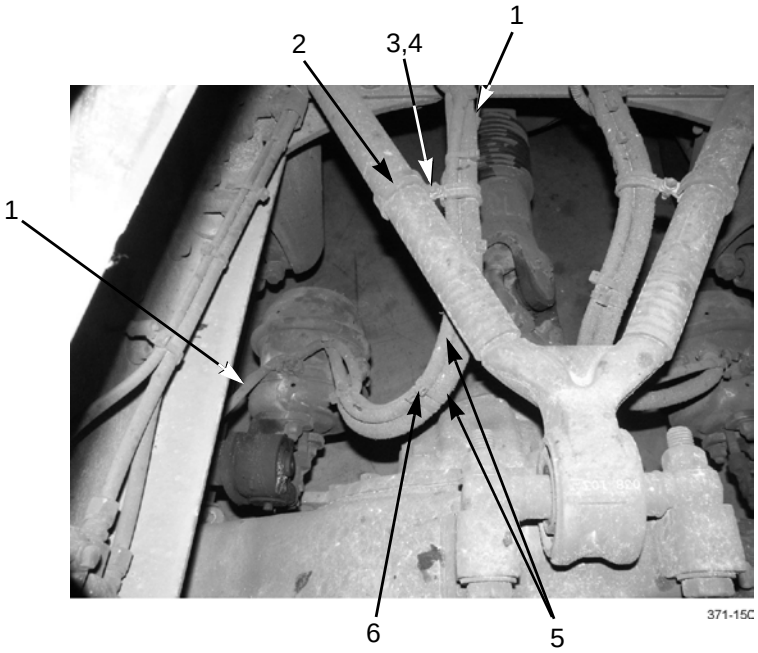

REMOVAL - CONTINUED

3. Remove clamp (8) from ABS sensor connector (9) and wiring harness connector (7).
4. Disconnect ABS sensor connector (9) from wiring harness connector (7).

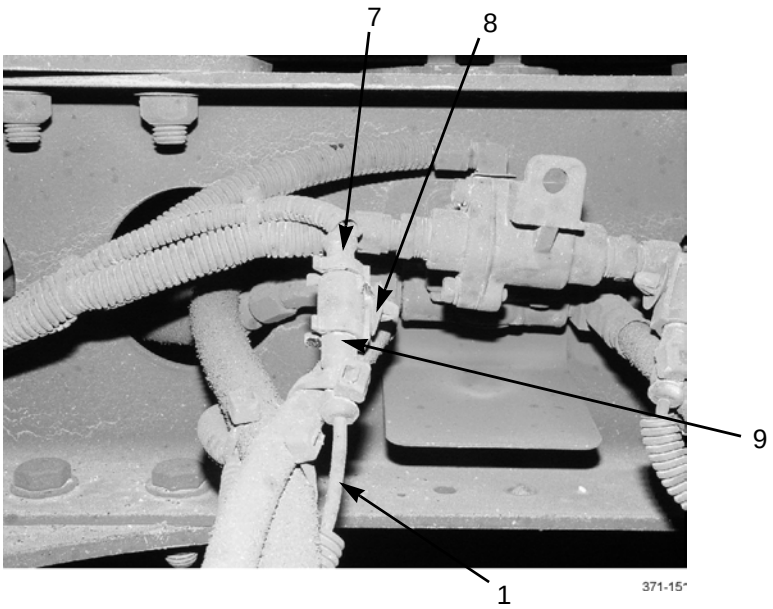

5. With assistance, remove drum (11) from axle (10).

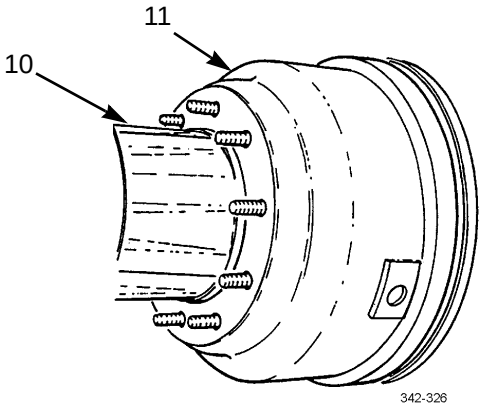

6. Remove ABS sensor (13) from mounting bracket (14).
7. Remove ABS sensor (13) with ABS sensor cable (1) through brake spider (12) and remove from vehicle.

REMOVAL - CONTINUED

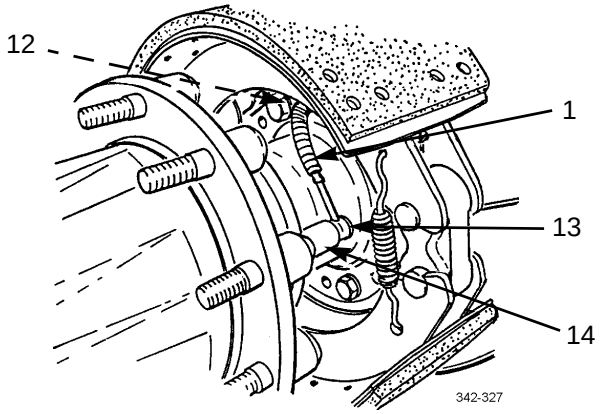

INSTALLATION

WARNING

Brakeshoe linings and inside drum friction surface must be free of all oil/grease and other contaminants prior to assembly to ensure maximum braking capability. Oil/grease and other contaminants may compromise braking that could lead to a serious accident resulting in injury and/or death.

NOTE

Ensure that wire loom is installed around ABS sensor cable.

1. Position ABS sensor (13) and feed ABS sensor cable (1) through brake spider (12).
2. Lightly coat outside of ABS sensor (13) with grease.
3. Carefully install ABS sensor (13) on mounting bracket (14) until sensor is stopped by ABS tone ring.
4. Install drum (11) on axle (10).
5. At other end of ABS sensor cable (1), connect ABS sensor connector (9) to wiring harness connector (7).
6. Install clamp (8) over ABS sensor connector (9) and wiring harness connector (7).

INSTALLATION - CONTINUED

7. Secure ABS sensor cable (1) to air lines (5) with clamp (2), screw (4), and nut (3).
8. Along ABS sensor cable (1), install new tiedown straps (6) to secure cable in position.

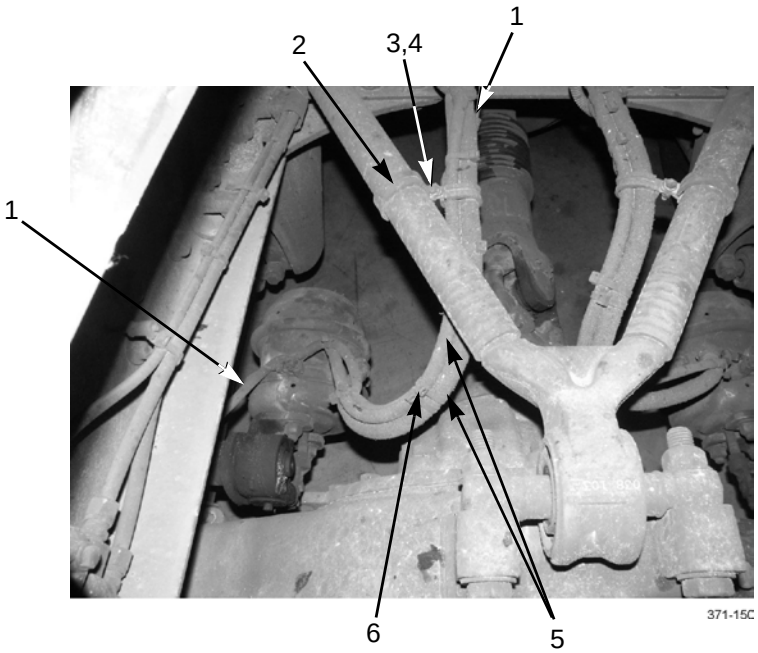

9. Install rear dual wheels (TM 9-2320-302-10).

END OF WORK PACKAGE

DAYTIME RUNNING LIGHTS (DRL) CONTROL MODULE REPLACEMENT (M915A3 NEW MODEL, M916A3, M917A2) 0124 00

THIS WORK PACKAGE COVERS

Removal, Installation

INITIAL SETUP

Tools and Special Tools

Tool kit, general mechanic's (Item 50, WP 0306 00)

Wrench set, socket attachment, screwdriver, torx (Item 61, WP 0306 00)

Equipment Condition

Master battery switch in OFF position (TM 9-2320-302-10)

Passenger seat as far forward as possible (TM 9-2320-302-10)

REMOVAL

1. Behind passenger seat, remove two screws (3), washers (4), and plastic cover (1) from plate (2).

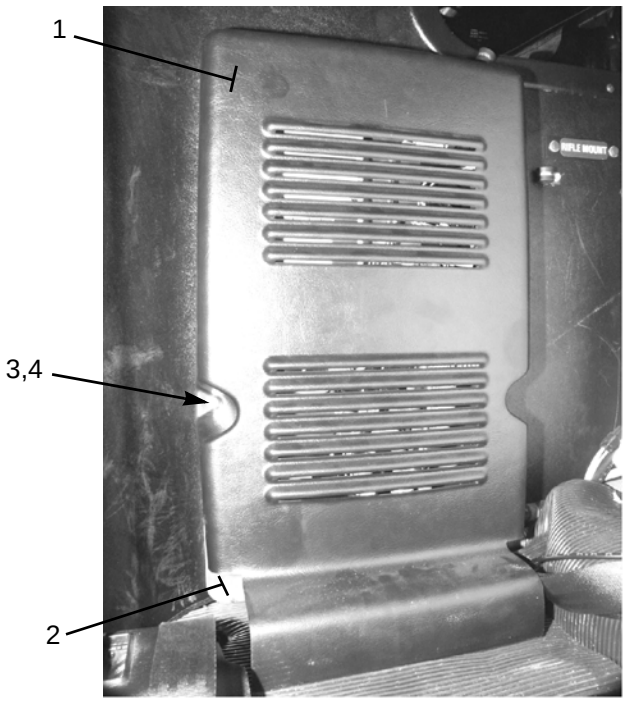

371-160

DAYTIME RUNNING LIGHTS (DRL) CONTROL MODULE REPLACEMENT (M915A3 NEW MODEL, M916A3, M917A2) - CONTINUED

0124 00

REMOVAL - CONTINUED

2. At bottom of DRL control (7), disconnect connector (8) of wiring harness (9).
3. Remove two screws (5), washers (6), and DRL control (7) from plate (2).

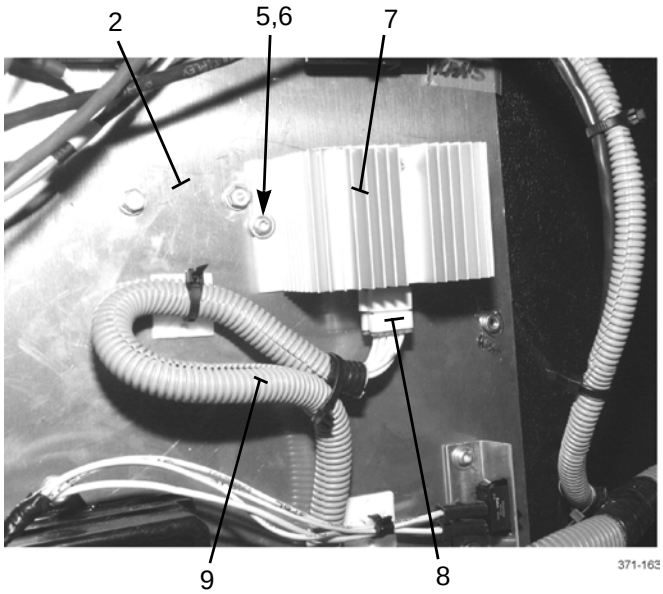

INSTALLATION

1. Install DRL control (7) to plate (2) with two washers (6) and screws (5).
2. Connect connector (8) of wiring harness (9) to bottom of DRL control (7).
3. Install plastic cover (1) to plate (2) with two washers (4) and screws (3).

INSTALLATION - CONTINUED

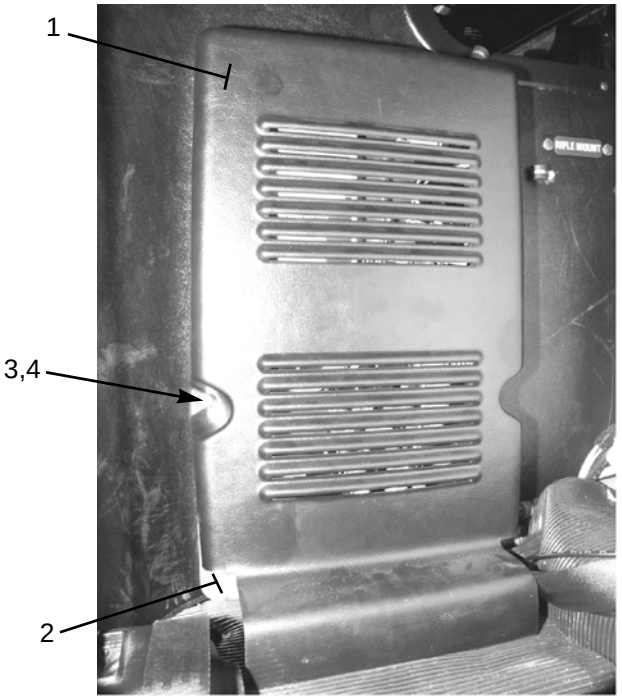

371-160

END OF WORK PACKAGE

DAYTIME RUNNING LIGHTS (DRL) WIRING HARNESS REPLACEMENT (M915A3 NEW MODEL, M916A3, M917A2) 0125 00

THIS WORK PACKAGE COVERS

Removal, Installation

INITIAL SETUP

Tools and Special Tools

Tool kit, general mechanic's (Item 50, WP 0306 00)

Wrench set, socket attachment, screwdriver, torx (Item 61, WP 0306 00)

Materials/Parts

Straps, tiedown (Item 33, WP 0305 00)

Tape, insulation, electrical (Item 37, WP 0305 00)

Equipment Condition

Master battery switch in OFF position (TM 9-2320-302-10)

Passenger seat as far forward as possible (TM 9-2320-302-10)

REMOVAL

NOTE

Remove and discard tiedown straps and electrical tape as necessary.

1. Behind passenger seat, remove two screws (3), washers (4), and plastic cover (1) from plate (2).

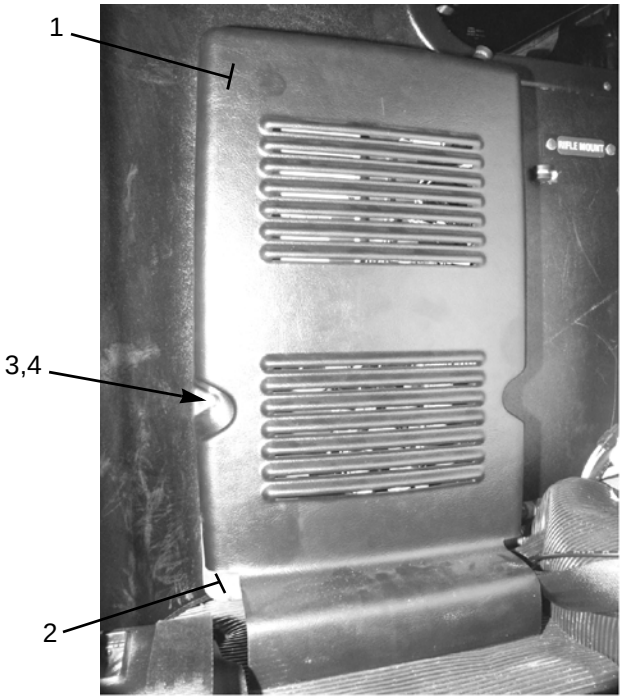

371-160

REMOVAL - CONTINUED

2. At bottom of DRL control (5), disconnect connector (6) of DRL wiring harness (7).

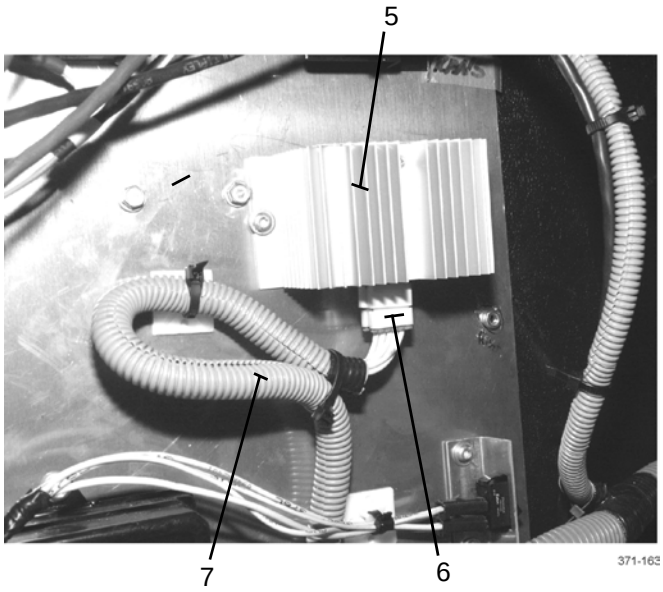

3. Remove three screws (8) and access cover (9) at passenger side of cab floor.

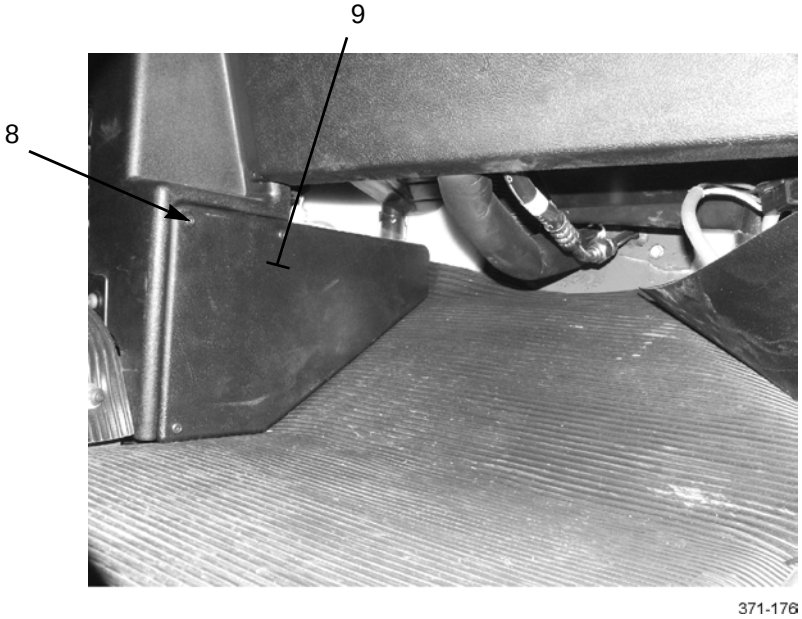

4. Trace DRL wiring harness (7) forward through transmission access tunnel (12).
5. Disconnect DRL wiring harness connector (11) from wiring harness (10).
6. Tie a suitable lacing wire or rope to DRL wiring harness (7) connector (11). Remove wiring harness from vehicle by pulling harness rearward through transmission access tunnel (12). DO NOT remove lacing wire or rope from tunnel.

REMOVAL - CONTINUED

7. As required, remove conduit from DRL wiring harness (7).

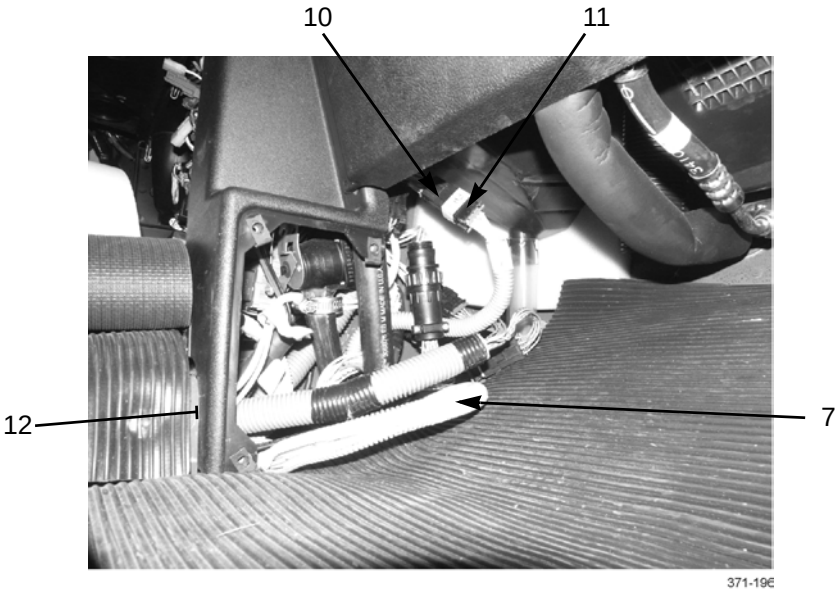

INSTALLATION

NOTE

Install new tiedown straps and electrical tape as required.

1. If removed, install conduit to DRL wiring harness (7).
2. Position DRL wiring harness (7) between points of connection.
3. Tie lacing wire or rope to DRL wiring harness (7) connector (11). Pull wiring harness forward through transmission access tunnel (12).
4. Connect DRL wiring harness connector (11) to wiring harness (10).
5. Install access cover (9) with three screws (8).
6. Connect connector (6) of DRL wiring harness (7) to bottom of DRL control (5).

INSTALLATION - CONTINUED

7. Install plastic cover (1) to plate (2) with two washers (4) and screws (3).

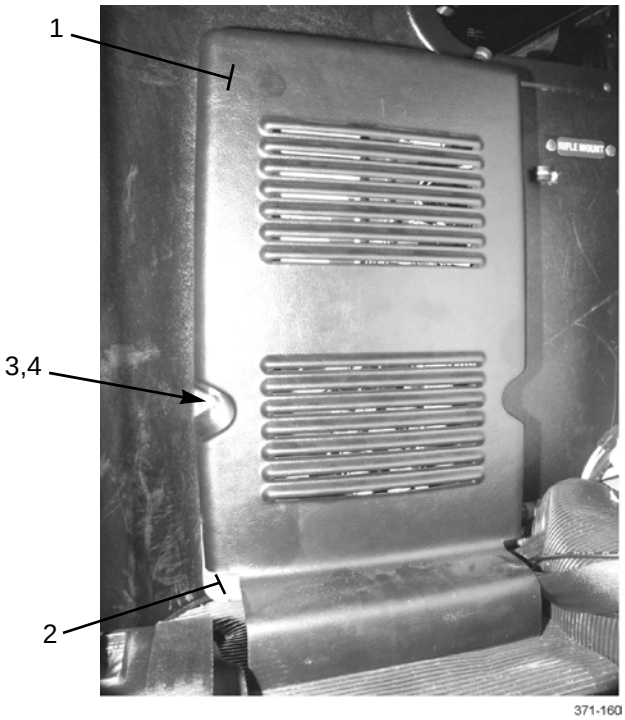

END OF WORK PACKAGE

ANTI-LOCK BRAKE SYSTEM (ABS) ELECTRONIC CONTROL UNIT (ECU) REPLACEMENT (M915A3 OLD MODEL) 0126 00

THIS WORK PACKAGE COVERS

Removal, Installation

INITIAL SETUP

Tools and Special Tools

Tool kit, general mechanic's (Item 50, WP 0306 00)

Materials/Parts

Tags, marker (Item 33, WP 0305 00)

Equipment Condition

Master battery switch in OFF position (TM 9-2320-302-10)

Passenger seat as far forward as possible (TM 9-2320-302-10)

REMOVAL

NOTE

Tag all cables to aid in installation.

1. Remove two screws (1) and cover (4).
2. Remove cable connectors (5) from electronic control unit (3).
3. Remove four screws (2) and electronic control unit (3).

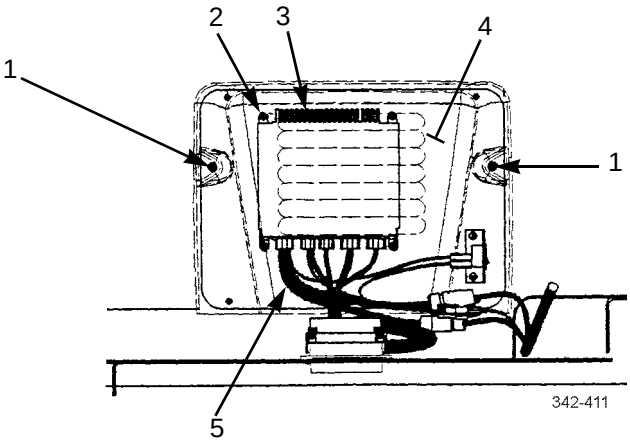

INSTALLATION

1. Install electronic control unit (3) with four screws (2).
2. Install cable connectors (5) on electronic control unit (3).
3. Install cover (4) with two screws (1).

END OF WORK PACKAGE

ANTI-LOCK BRAKE SYSTEM (ABS) ELECTRONIC CONTROL UNIT (ECU) AND ECU WIRING HARNESS REPLACEMENT (M915A3 NEW MODEL, M916A3, M917A2) 0127 00

THIS WORK PACKAGE COVERS

Removal, Installation

INITIAL SETUP

Tools and Special Tools

Tool kit, general mechanic's (Item 50, WP 0306 00)

Drill, electric, portable (Item 9, WP 0306 00)

Drill set, twist (Item 10, WP 0306 00)

Riveter, blind, hand (Item 38, WP 0306 00)

Wrench set, socket attachment, screwdriver, torx (Item 61, WP 0306 00)

Materials/Parts

Straps, tiedown (Item 33, WP 0305 00)

Tags, marker (Item 34, WP 0305 00)

Tape, insulation, electrical (Item 37, WP 0305 00)

Rivet, blind (P/N 23-10000-601) (2)

Equipment Condition

Master battery switch in OFF position (TM 9-2320-302-10)

Passenger seat as far forward as possible (TM 9-2320-302-10)

REMOVAL

NOTE

- To remove ABS ECU only, perform steps 1 through 3.
- Remove and discard tiedown straps and electrical tape as necessary.
- Tag electrical connectors to ensure correct installation.

ANTI-LOCK BRAKE SYSTEM (ABS) ELECTRONIC CONTROL UNIT (ECU) AND ECU WIRING HARNESS REPLACEMENT (M915A3 NEW MODEL, M916A3, M917A2) - CONTINUED 0127 00

REMOVAL - CONTINUED

1. Behind passenger seat, remove two screws (3), washers (4), and plastic cover (1) from plate (2).

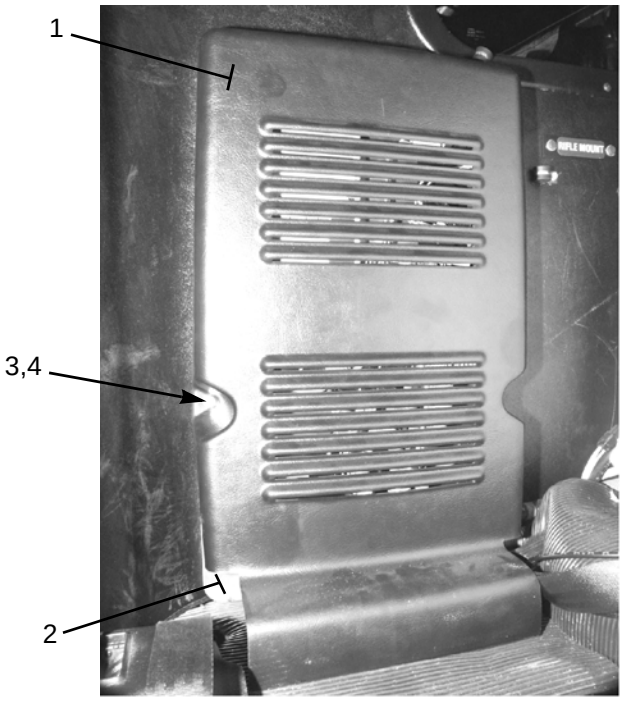

2. At bottom of ABS ECU (5), disconnect two connectors (9) of ECU wiring harness (8).
3. Remove three screws (6), washers (7), and ABS ECU (5) from plate (2).

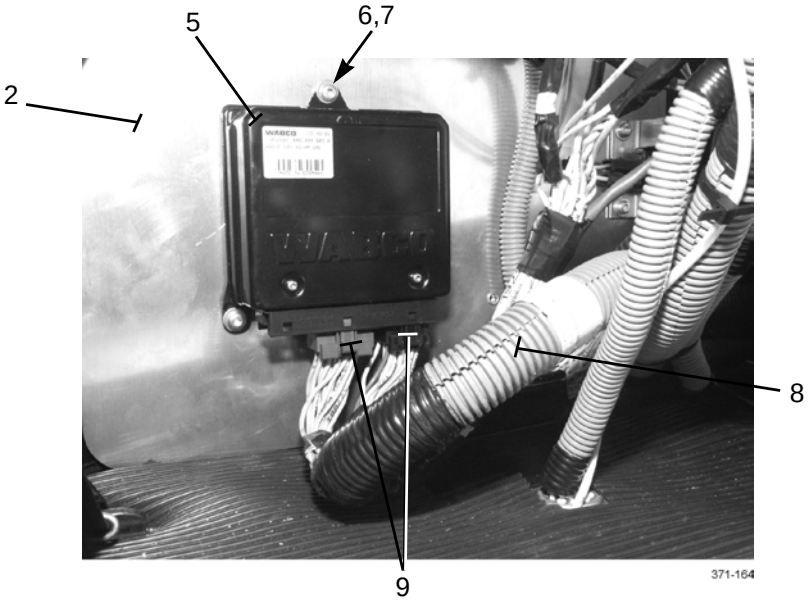

ANTI-LOCK BRAKE SYSTEM (ABS) ELECTRONIC CONTROL UNIT (ECU) AND ECU WIRING HARNESS REPLACEMENT (M915A3 NEW MODEL, M916A3, M917A2) - CONTINUED 0127 00

REMOVAL - CONTINUED

4. Trace wires (12) near end of ECU wiring harness (8). Disconnect three connectors (11) of ECU wiring harness from ABS floor wiring harness (10).

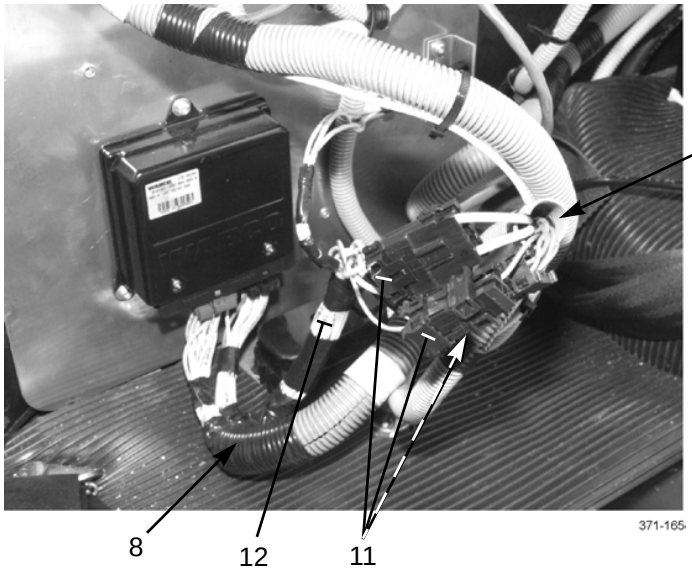

5. Trace wire (15) near end of ECU wiring harness (8) upward to ABS bus connector (13) and disconnect connector (16) from bus connector.

NOTE

Note orientation of locating arrow on ABS bus connector to ensure correct installation.

6. If ABS bus connector (13) is damaged, disconnect connector (14) and remove ABS bus connector.

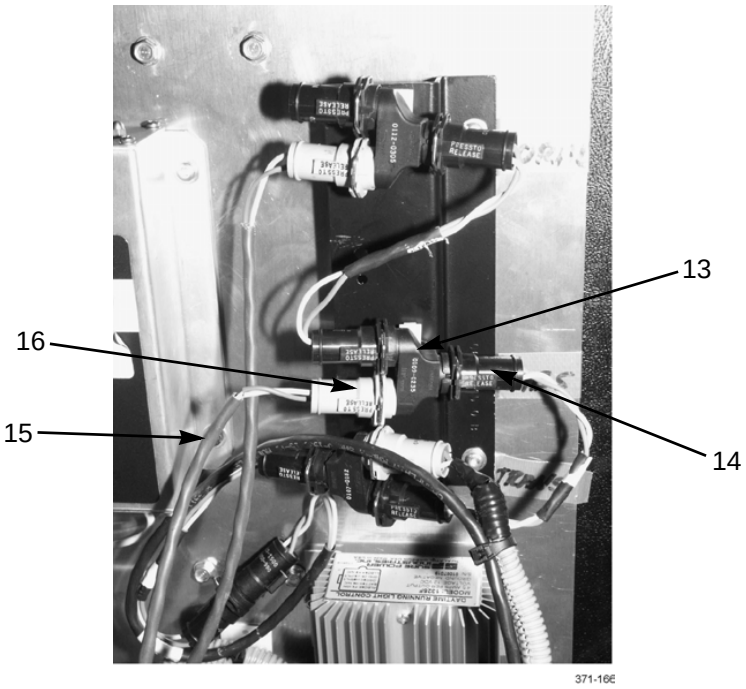

REMOVAL - CONTINUED

7. Trace wires (17) of ECU wiring harness (8) and disconnect two connectors (18) from rear of ABS check switch (22).

8. Remove ABS check switch (22) from mounting bracket (21).

9. If damaged, remove two screws (19), washers (20), and mounting bracket (21) from plate (2).

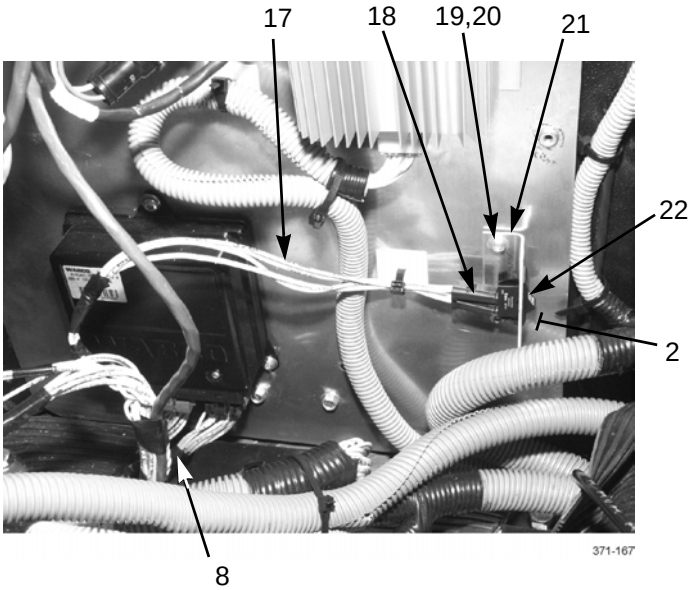

10. Underneath right rear of cab, loosen screw (25) at center of connector (24) and remove connector from underside of cab floor (23).

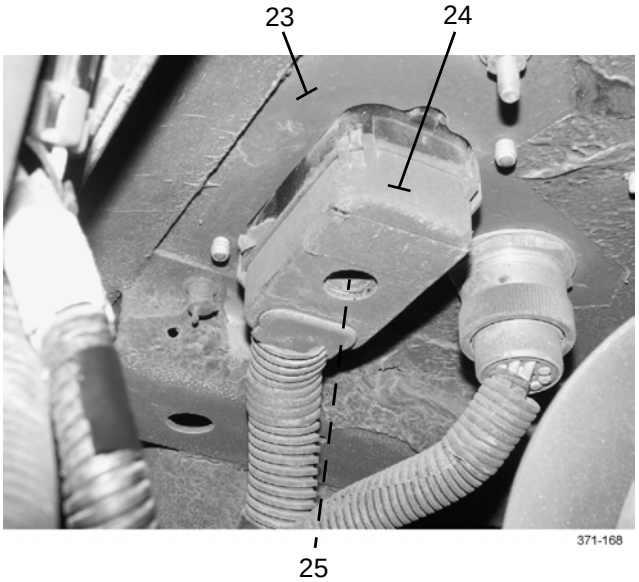

REMOVAL - CONTINUED

11. Inside cab, move rubber floor mat (28) aside to expose base of connector (26).
12. Drill through center of two rivets (27) and remove connector (26) with ECU wiring harness (8) from cab floor (23). Discard rivets.

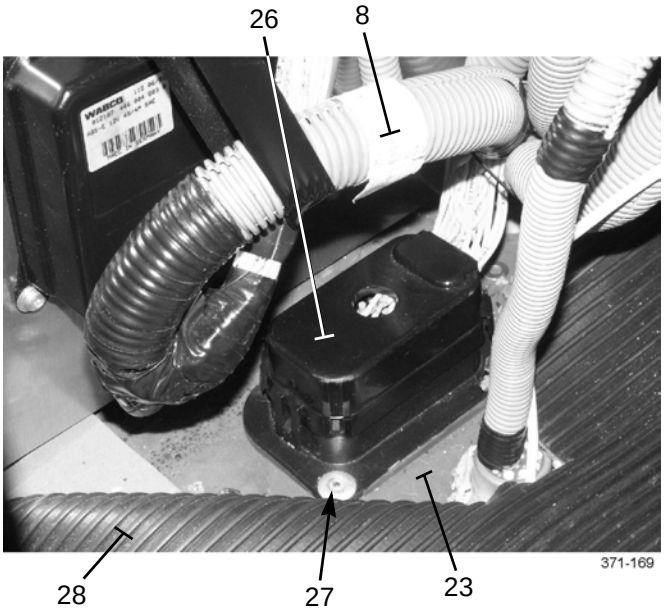

INSTALLATION

NOTE

- To install ABS ECU only, perform steps 10 through 12.
- Ensure that conduit is installed around ABS ECU wiring harness.
- Install new tiedown straps and electrical tape as necessary.

1. Inside cab, install ECU wiring harness (8) with connector (26) to cab floor (23) with two new rivets (27).
2. Move rubber floor mat (28) back to original position.
3. Underneath right rear of cab, install connector (24) to underside of cab floor (23) and tighten screw (25).

INSTALLATION - CONTINUED

4. If removed, install mounting bracket (21) to plate (2) with two washers (20) and screws (19).
5. Install ABS check switch (22) to mounting bracket (21).
6. Connect two connectors (18) of ECU wiring harness (8) to rear of ABS check switch (22).

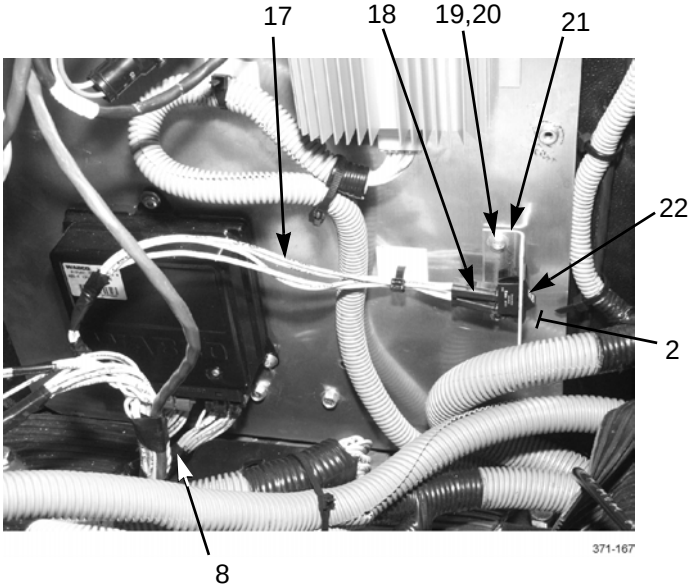

7. If removed, install ABS bus connector (13). Connect connector (14) to bus connector.
8. Position wire (15) near end of ECU wiring harness (8) upward and connect connector (16) to ABS bus connector (13).

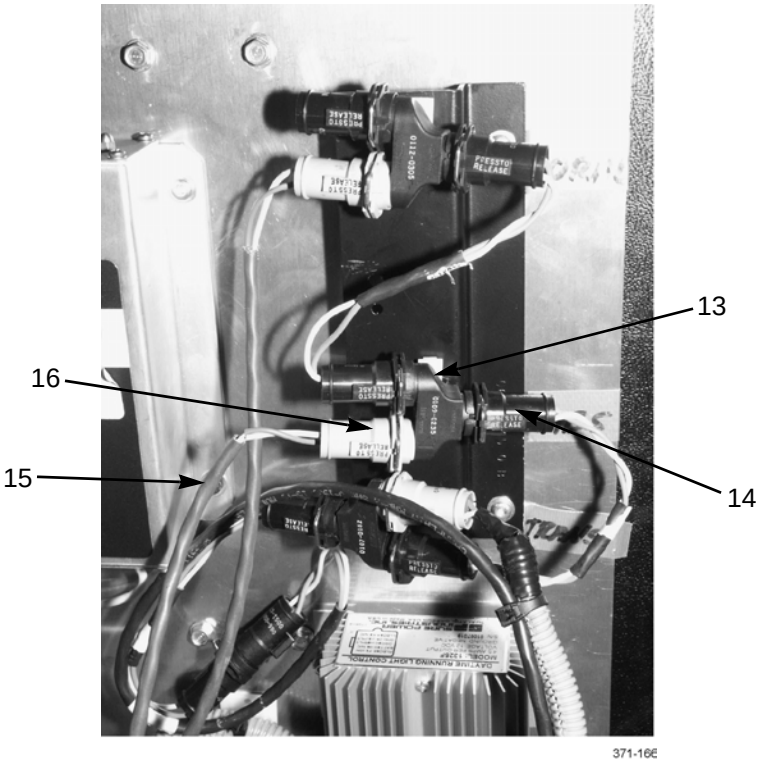

INSTALLATION - CONTINUED

9. Position wires (12) of ECU wiring harness (8) and connect three connectors (11) of ECU wiring harness to ABS floor wiring harness (10).

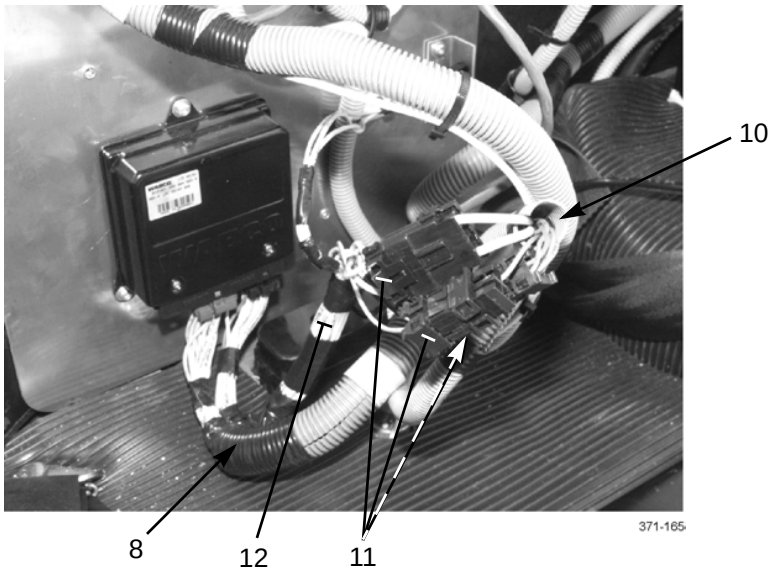

10. Install ABS ECU (5) to plate (2) with three washers (7) and screws (6).
11. At bottom of ABS ECU (5), connect two connectors (9) of ECU wiring harness (8).

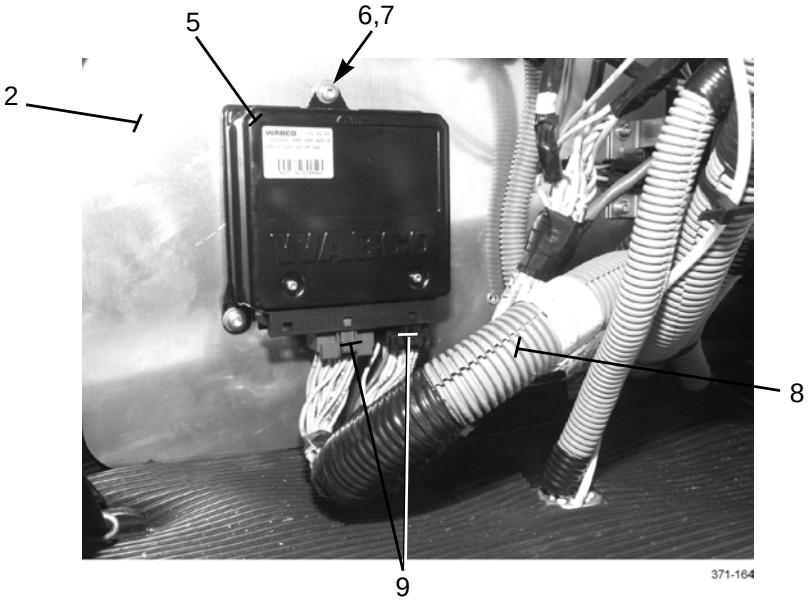

INSTALLATION - CONTINUED

12. Install plastic cover (1) to plate (2) with two washers (4) and screws (3).

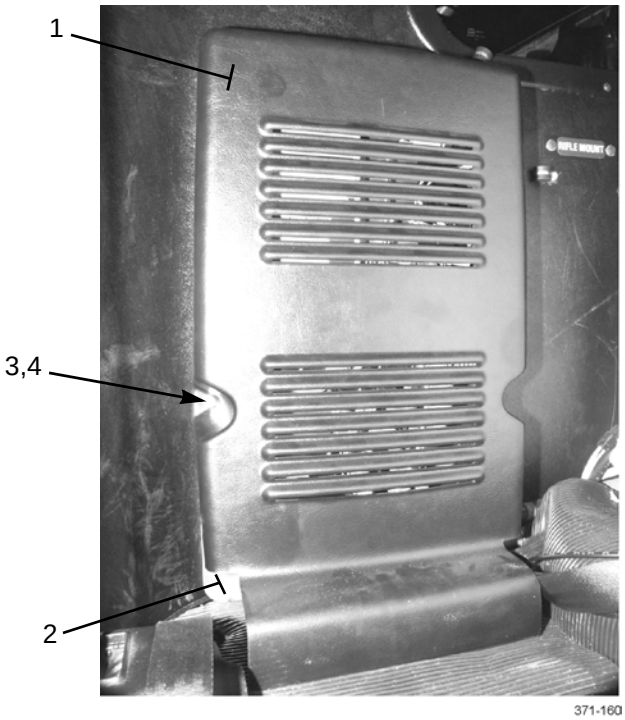

END OF WORK PACKAGE

ANTI-LOCK BRAKE SYSTEM (ABS) FLOOR WIRING HARNESS REPLACEMENT (M915A3 NEW MODEL, M916A3, M917A2) 0128 00

THIS WORK PACKAGE COVERS

Removal, Installation

INITIAL SETUP

Tools and Special Tools

Tool kit, general mechanic's (Item 50, WP 0306 00)

Wrench set, socket attachment, screwdriver, torx (Item 61, WP 0306 00)

Materials/Parts

Straps, tiedown (Item 33, WP 0305 00)

Tags, marker (Item 34, WP 0305 00)

Tape, insulation, electrical (Item 37, WP 0305 00)

References

WP 0084 00

WP 0151 00

Equipment Condition

Master battery switch in OFF position (TM 9-2320-302-10)

NOTE

Replacement of ABS floor wiring harness involves pulling harness through transmission access tunnel. It may be necessary to remove connectors from ends of harness to facilitate this procedure. Refer to WP 0151 00 for electrical connector maintenance procedures.

ANTI-LOCK BRAKE SYSTEM (ABS) FLOOR WIRING HARNESS REPLACEMENT (M915A3 NEW MODEL, M916A3, M917A2) - CONTINUED

0128 00

REMOVAL

NOTE

- Remove and discard tiedown straps and electrical tape as necessary.
- Tag wires and electrical connectors to ensure correct installation.

1. Behind passenger seat, remove two screws (3), washers (4), and plastic cover (1) from plate (2).

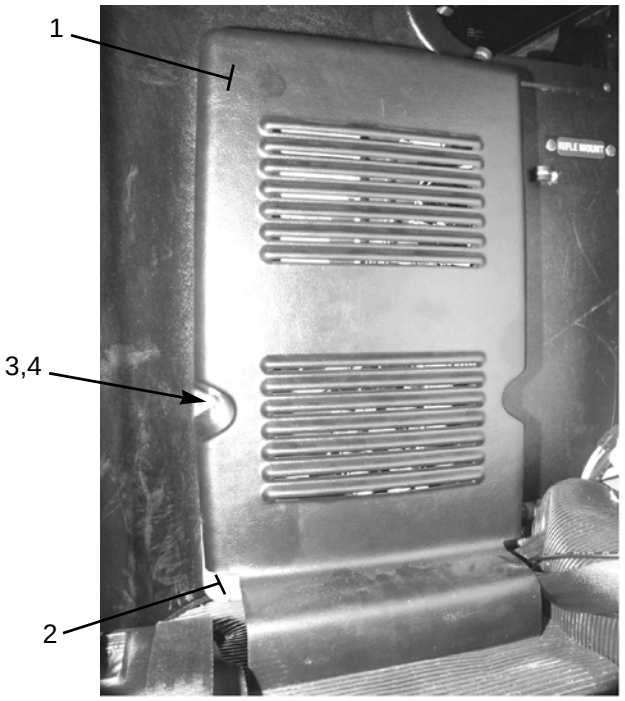

371-160

2. Trace ABS ECU wiring harness (8) back to three connectors (5). Disconnect connectors (5) from connectors (6) of ABS floor wiring harness (7).
3. Trace ABS floor wiring harness (7) to point where it enters transmission access tunnel near back wall of cab.

REMOVAL - CONTINUED

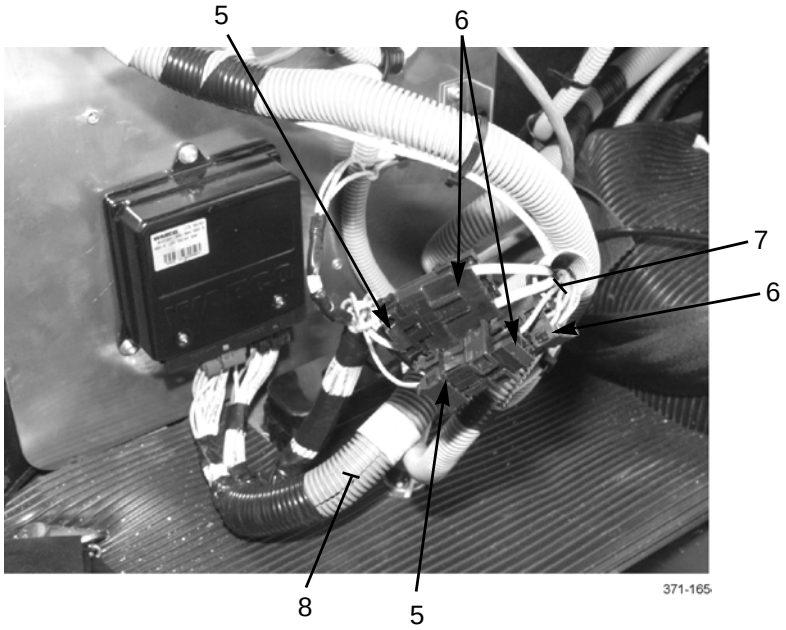

4. To assist in gaining access to wiring, remove three screws (9) and access cover (10) at floor on passenger side.

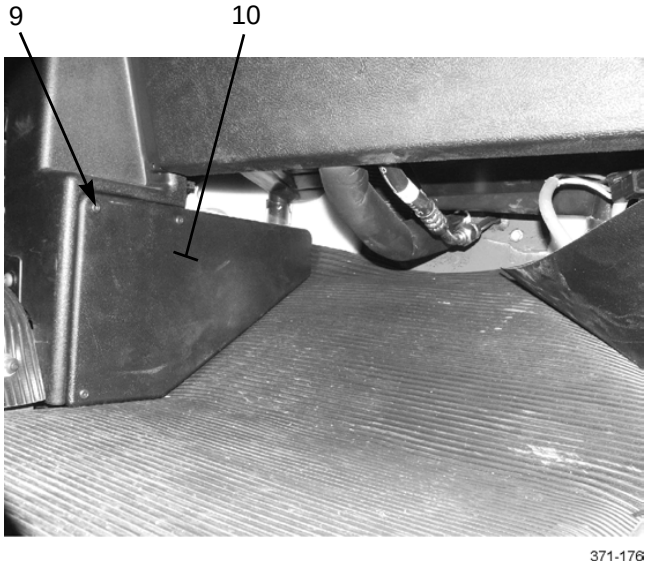

ANTI-LOCK BRAKE SYSTEM (ABS) FLOOR WIRING HARNESS REPLACEMENT (M915A3 NEW MODEL, M916A3, M917A2) - CONTINUED

0128 00

REMOVAL - CONTINUED

5. Remove fuse panel cover at floor between driver and passenger seats (WP 0084 00).

6. Trace ABS floor wiring harness (7) as it exits transmission access tunnel (11) and is routed upward toward fuse panel.

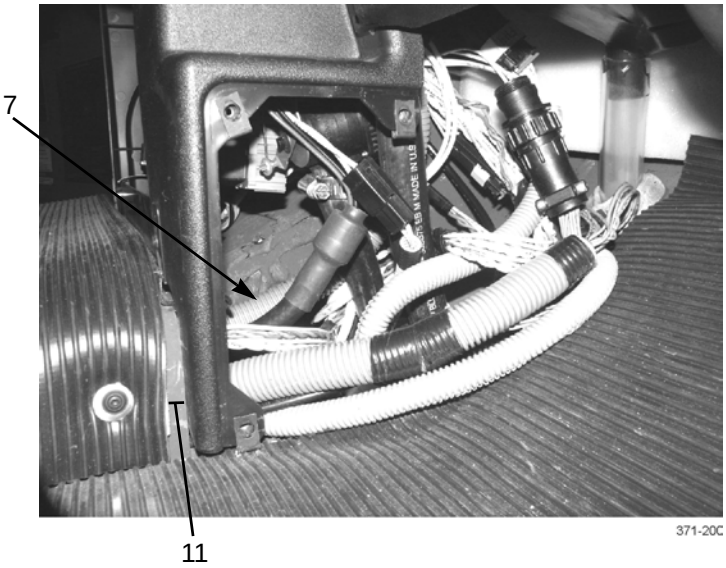

7. Disconnect two ABS floor wiring harness connectors (13) from wiring harness connectors (12).

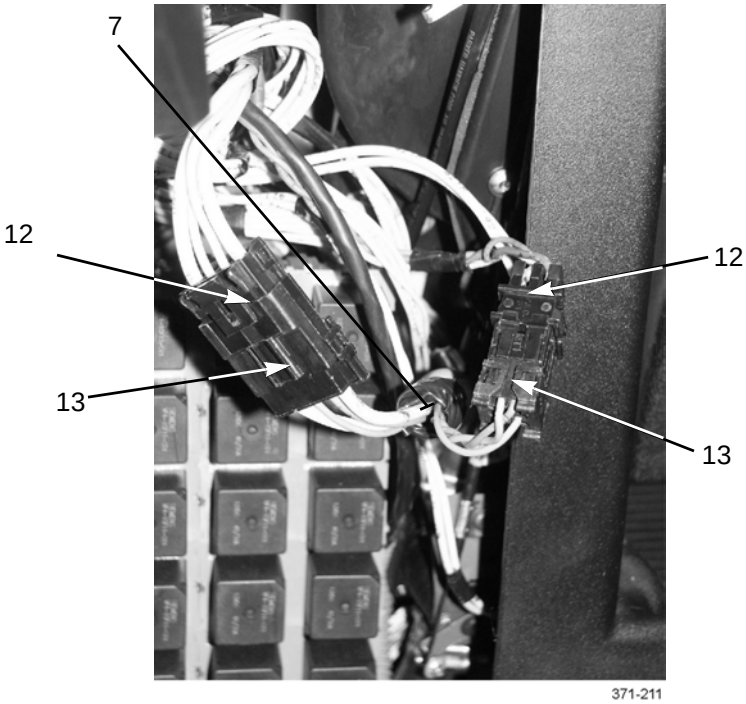

REMOVAL - CONTINUED

8. Tie a suitable lacing wire or rope to ABS floor wiring harness (7). Remove wiring harness from vehicle by pulling harness rearward through transmission access tunnel (11). DO NOT remove lacing wire or rope from tunnel.
9. As required, remove conduit from ABS floor wiring harness (7).

INSTALLATION

NOTE

Install new tiedown straps and electrical tape as necessary.

1. If removed, install conduit to ABS floor wiring harness (7).
2. Position ABS floor wiring harness (7) between points of connection.
3. Tie lacing wire or rope to ABS floor wiring harness (7). Pull wiring harness forward through transmission access tunnel (11).
4. Route ABS floor wiring harness (7) upward toward connection points.
5. Connect two ABS floor wiring harness connectors (13) to wiring harness connectors (12).
6. Install access cover (10) with three screws (9).

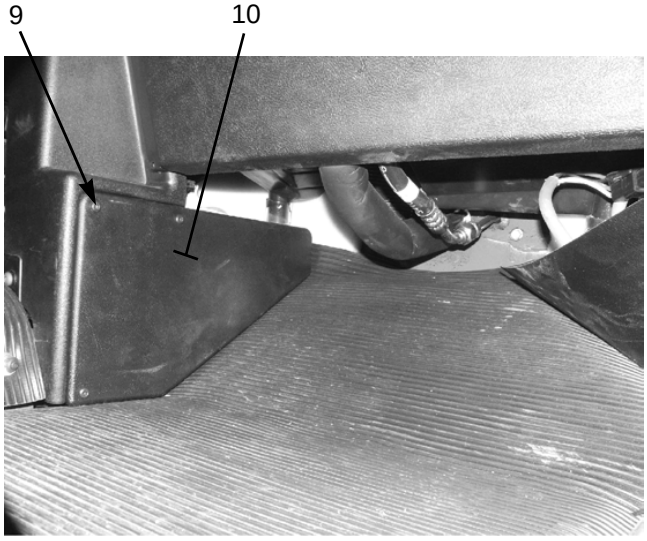

371-176

INSTALLATION - CONTINUED

7. Install fuse panel cover (WP 0084 00).
8. Connect three connectors (6) of ABS floor wiring harness (7) to connectors (5) of ABS ECU wiring harness (8).

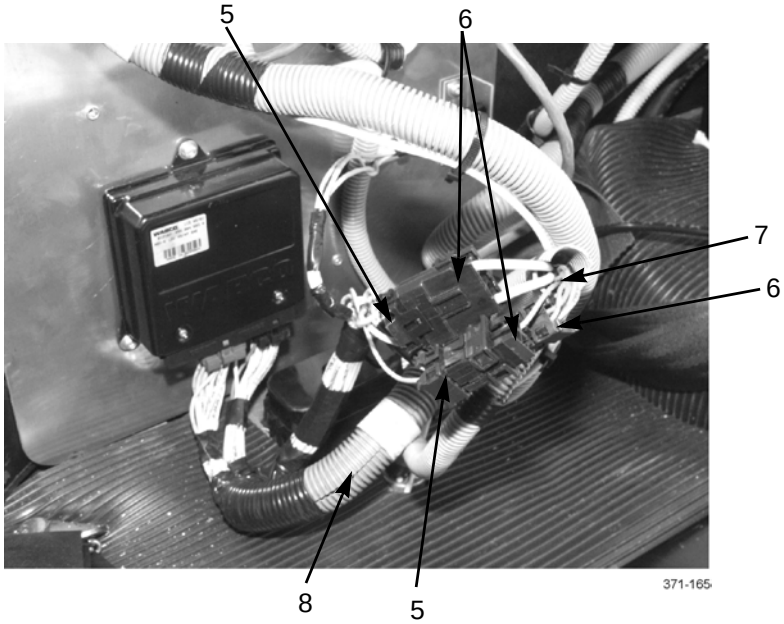

9. Install plastic cover (1) to plate (2) with two washers (4) and screws (3).

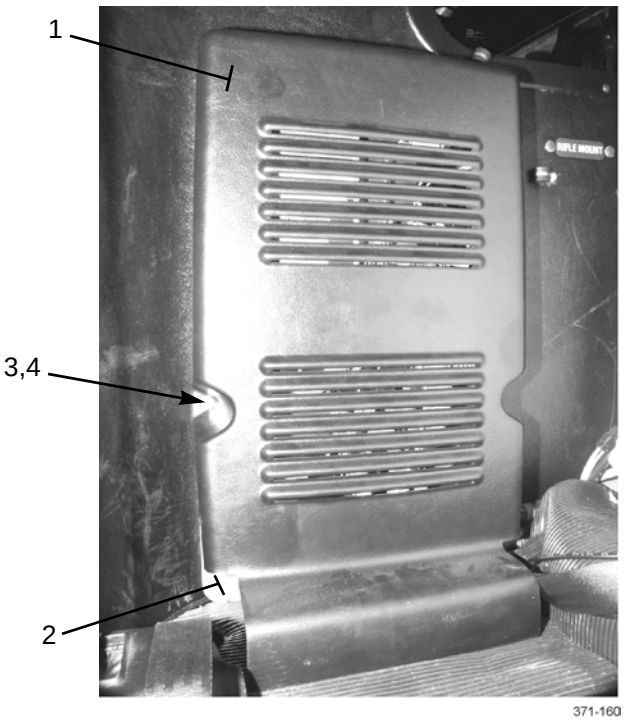

END OF WORK PACKAGE

CAB ANTI-LOCK BRAKE SYSTEM (ABS) ECU WIRING HARNESS REPLACEMENT (M915A3 OLD MODEL) 0129 00

THIS WORK PACKAGE COVERS

Removal, Installation

INITIAL SETUP

Tools and Special Tools

Tool kit, general mechanic's (Item 50, WP 0306 00)

Materials/Parts

Straps, tiedown (Item 33, WP 0305 00)

Tags, marker (Item 34, WP 0305 00)

Equipment Condition

Master battery switch in OFF position (TM 9-2320-302-10)

REMOVAL

NOTE

- Note number and location of tiedown straps to aid in installation.
- Tag wiring harness and leads prior to removal to aid in installation.

1. Remove tiedown straps securing cab ABS wiring harness. Discard tiedown straps.
2. Disconnect ABS wiring harness connections, using illustration as a guide.

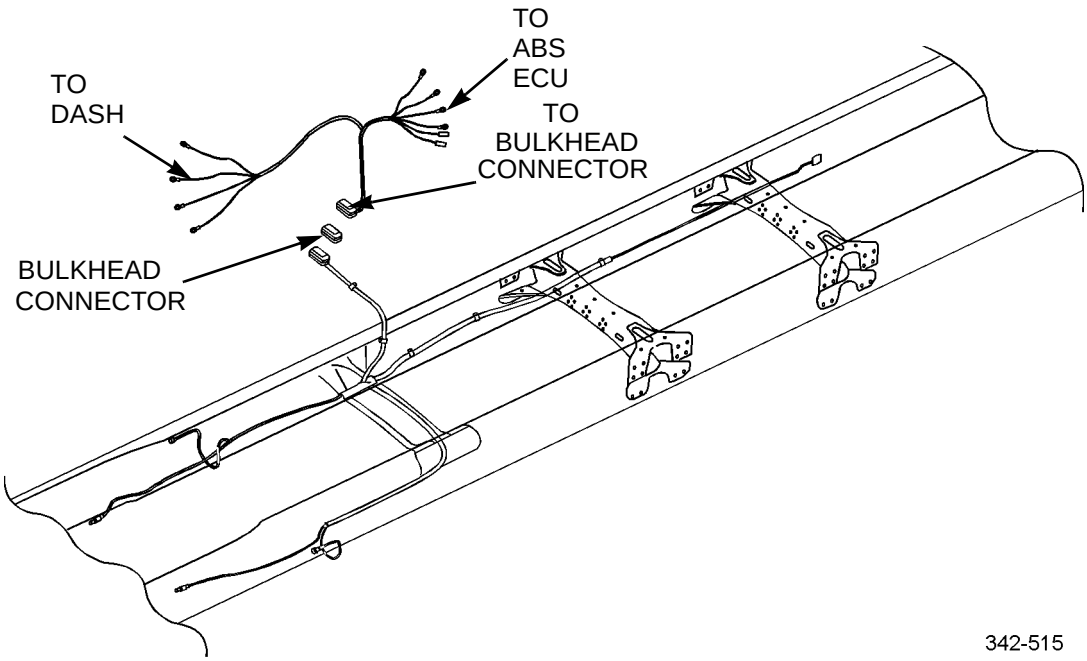

CAB ANTI-LOCK BRAKE SYSTEM (ABS) ECU WIRING HARNESS REPLACEMENT (M915A3 OLD MODEL) - CONTINUED

0129 00

INSTALLATION

1. Connect ABS wiring harness connections, using illustration as a guide.
2. Install same number of new tiedown straps as were removed, to secure cab ABS wiring harness.

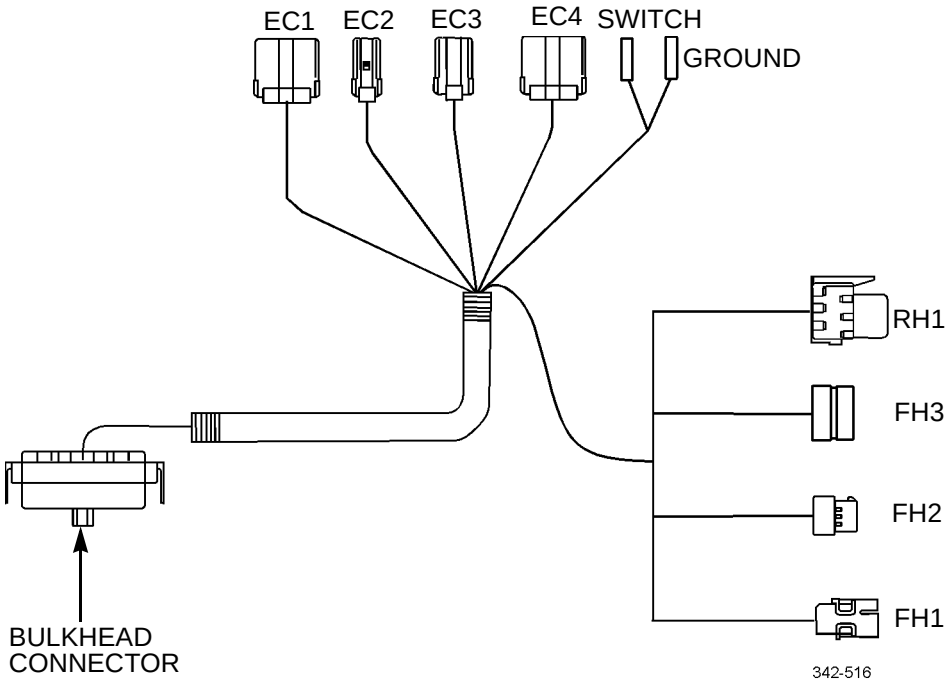

END OF WORK PACKAGE

BRAKE LIGHT/TRAILER BRAKE LIGHT SENDING UNIT REPLACEMENT 0130 00

THIS WORK PACKAGE COVERS

Removal, Installation

INITIAL SETUP

Tools and Special Tools

Tool kit, general mechanic's (Item 50, WP 0306 00)

Materials/Parts

Compound, sealing, pipe (Item 33, WP 0305 00)

Tags, marker (Item 34, WP 0305 00)

Equipment Condition

Air system drained (TM 9-2320-302-10)

Check engine switch removed (WP 0083 00)

REMOVAL

1. Remove three screws (1) and cover (2).

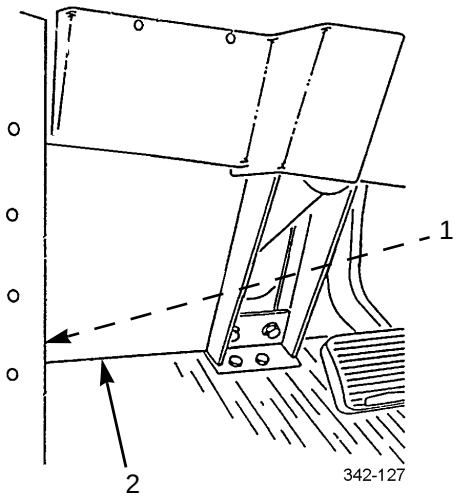

2. If necessary, remove cab air junction block (WP 0191 00) to access brake light/trailer brake light sending unit.

NOTE

Tag electrical wires to aid in installation.

REMOVAL - CONTINUED

3. Remove two locknuts (5) and electrical wires (6 and 7) from brake light/trailer brake light sending unit (4). Discard locknuts.
4. Remove brake light/trailer brake light sending unit (4) from elbow (3).

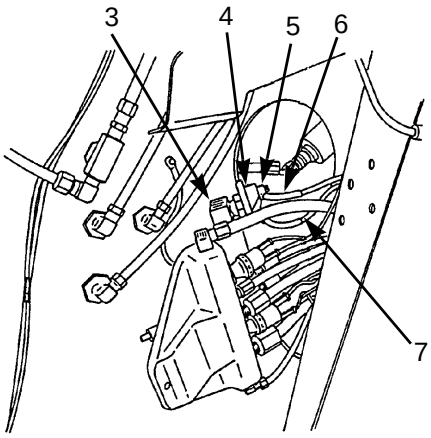

INSTALLATION

- Adhesives and sealing compounds can burn easily, can give off harmful vapors, and are harmful to skin and clothing. To avoid injury or death, keep away from open fire and use in a well-ventilated area. If adhesives or sealing compound gets on skin or clothing, wash immediately with soap and water.
- Ensure that all air lines and fittings are clear of debris and excess pipe sealing compound does not enter air lines or fittings. Failure to follow this warning could result in injury to personnel or damage to equipment.

1. Lightly coat threads of brake light/trailer brake light sending unit (4) with pipe sealing compound. Install sending unit on elbow (3).
2. Install two electrical wires (6 and 7) on brake light/trailer brake light sending unit (4) with two new locknuts (5).

INSTALLATION - CONTINUED

3. If removed, install cab air junction block (WP 0191 00).
4. Install cover (2) with three screws (1).

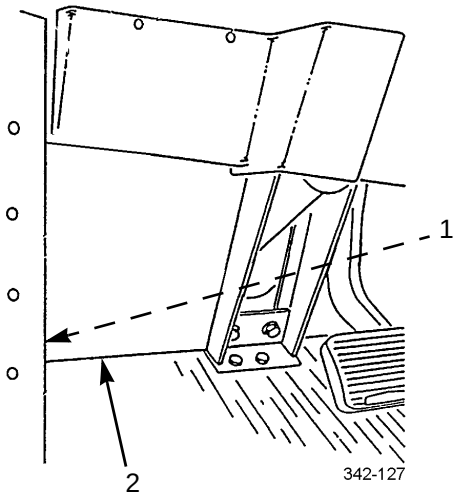

5. Install check engine switch (WP 0083 00).
6. Check air system for leaks.

END OF WORK PACKAGE

BACKUP ALARM REPLACEMENT (M917A2) 0131 00

THIS WORK PACKAGE COVERS

Removal, Installation

INITIAL SETUP

Tools and Special Tools

Tool kit, general mechanic's (Item 50, WP 0306 00)

Materials/Parts

Tags, marker (Item 34, WP 0305 00)

Washer, lock (P/N MS35338-140) (2)

Equipment Condition

Master battery switch in OFF position (TM 9-2320-302-10)

REMOVAL

NOTE

- Tag wires prior to removal to aid in installation.
- Backup alarm is located at left rear taillight.

1. Remove nut (3), two washers (4), bolt (5), and wiring harness clamp (2) from rear of backup alarm (1).

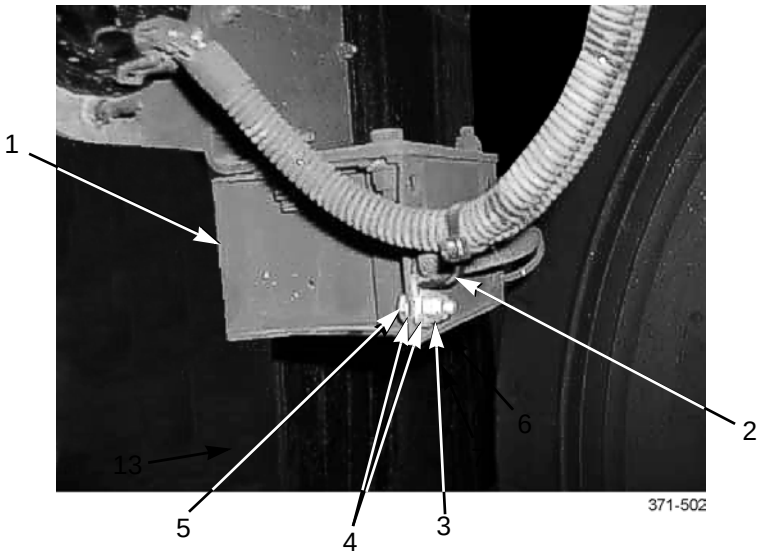

REMOVAL - CONTINUED

2. Remove two screws (9), lockwashers (10) and leads (11) from side of backup alarm (1). Discard lockwashers.
3. Remove two grommets (12), and feed leads (11) through holes in backup alarm (1).
4. Remove four nuts (6), eight washers (7), four bolts (8), and backup alarm (1) from bracket (16).

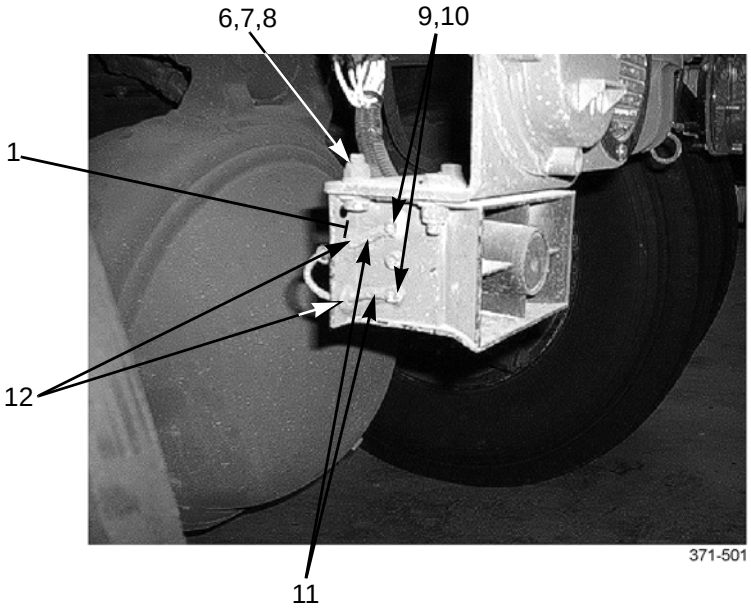

NOTE

Perform step 5 if bracket is removed.

5. If damaged, remove three screws (13), washers (14), nuts (15), and bracket (16).

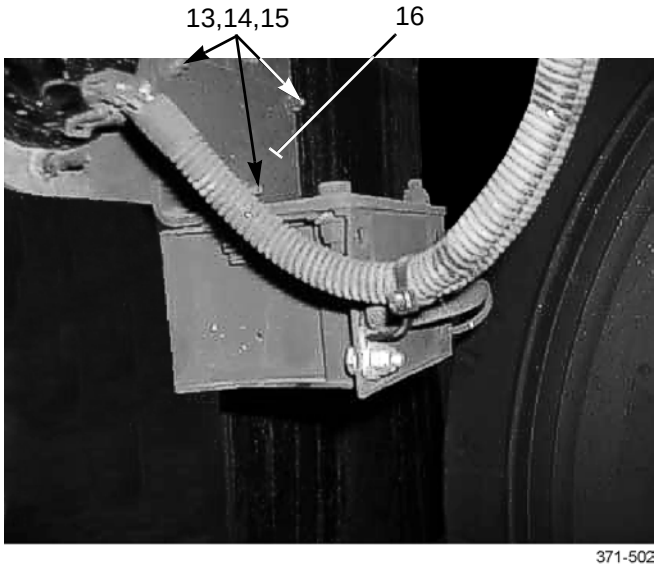

INSTALLATION

NOTE

Perform step 1 if bracket was removed.

1. Position bracket (16) and install three screws (13), washers (14), and nuts (15).
2. Position backup alarm (1) on bracket (16) and install four bolts (8), eight washers (7), and four nuts (6).
3. Feed leads (11) through holes in backup alarm (1) and install two screws (9) and new lockwashers (10).
4. Install grommets (12).
5. Position wiring harness clamp (2) on rear of backup alarm (1) and install bolt (5), two washers (4), and nut (3).

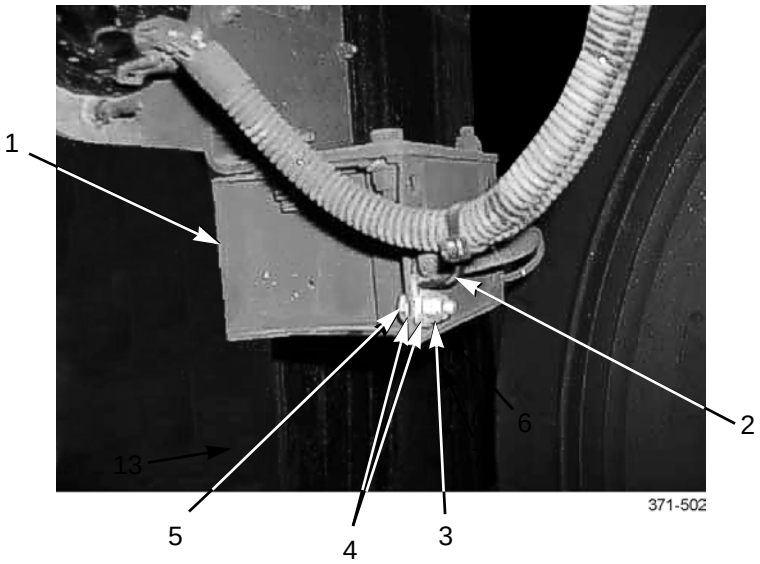

END OF WORK PACKAGE

BACKUP LIGHT SENDING UNIT REPLACEMENT 0132 00

THIS WORK PACKAGE COVERS

Removal, Installation

INITIAL SETUP

Tools and Special Tools

Tool kit, general mechanic's (Item 50, WP 0306 00)

Equipment Condition

Master battery switch in OFF position (TM 9-2320-302-10)

Equipment Condition - Continued

Transmission fluid drained (WP 0023 00)

Transmission oil/fill level check tube removed (WP 0154 00)

REMOVAL

1. Remove two nuts (2) and two lockwashers (1). Discard lockwashers.

NOTE

Tag wires prior to removal to aid in installation.

2. Disconnect two wires (3) from backup light sending unit (4).
3. Remove backup light sending unit (4) and washer (5).

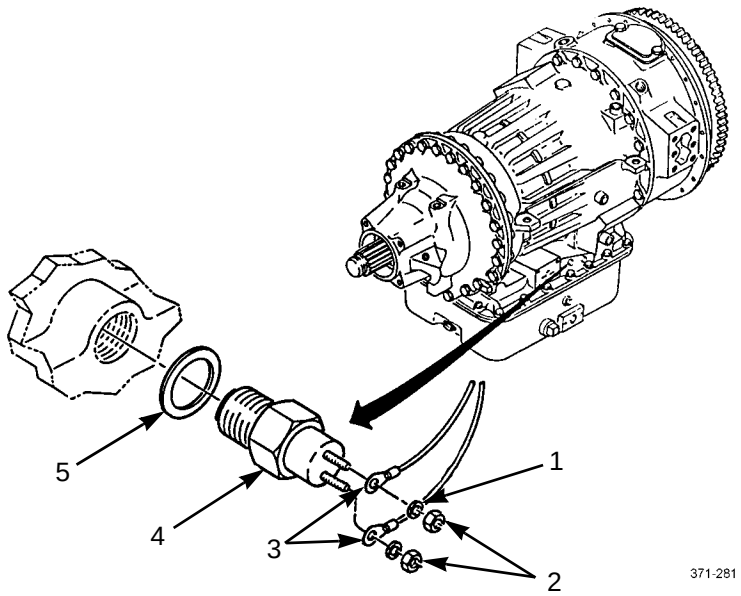

INSTALLATION

1. Install washer (5) and backup light sending unit (4).
2. Connect two wires (3) to backup light sending unit (4).
3. Install two new lockwashers (1) and two nuts (2).

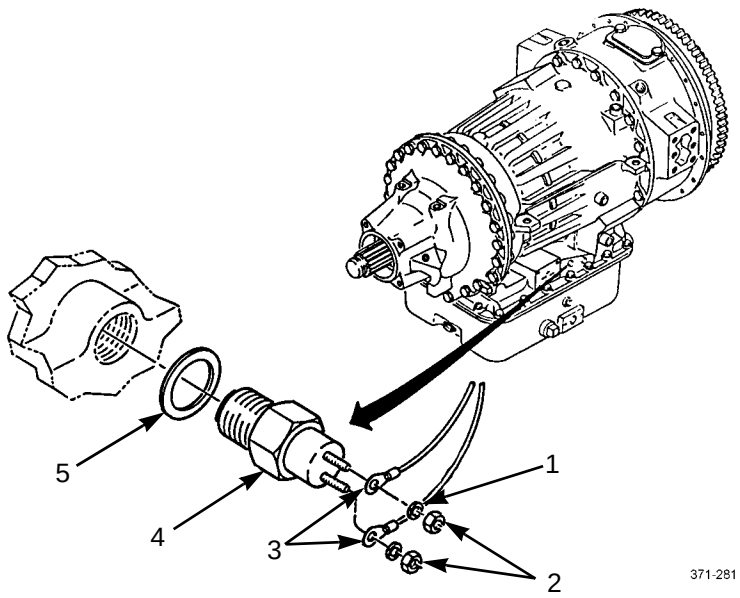

4. Install transmission oil fill/level check tube (WP 0154 00).
5. Fill with transmission fluid (WP 0023 00).

END OF WORK PACKAGE

AIR DRYER WIRING HARNESS REPLACEMENT (M916A3, M917A2) 0133 00

THIS WORK PACKAGE COVERS

Removal, Installation

INITIAL SETUP

Tools and Special Tools

Tool kit, general mechanic's (Item 50, WP 0306 00)

Materials/Parts

Tags, marker (Item 34, WP 0305 00)

Equipment Condition

Master battery switch in OFF position (TM 9-2320-302-10)

REMOVAL

1. Disconnect connector (2) and connector (5) from air dryers (1).
2. Separate connectors (3 and 4) if necessary.

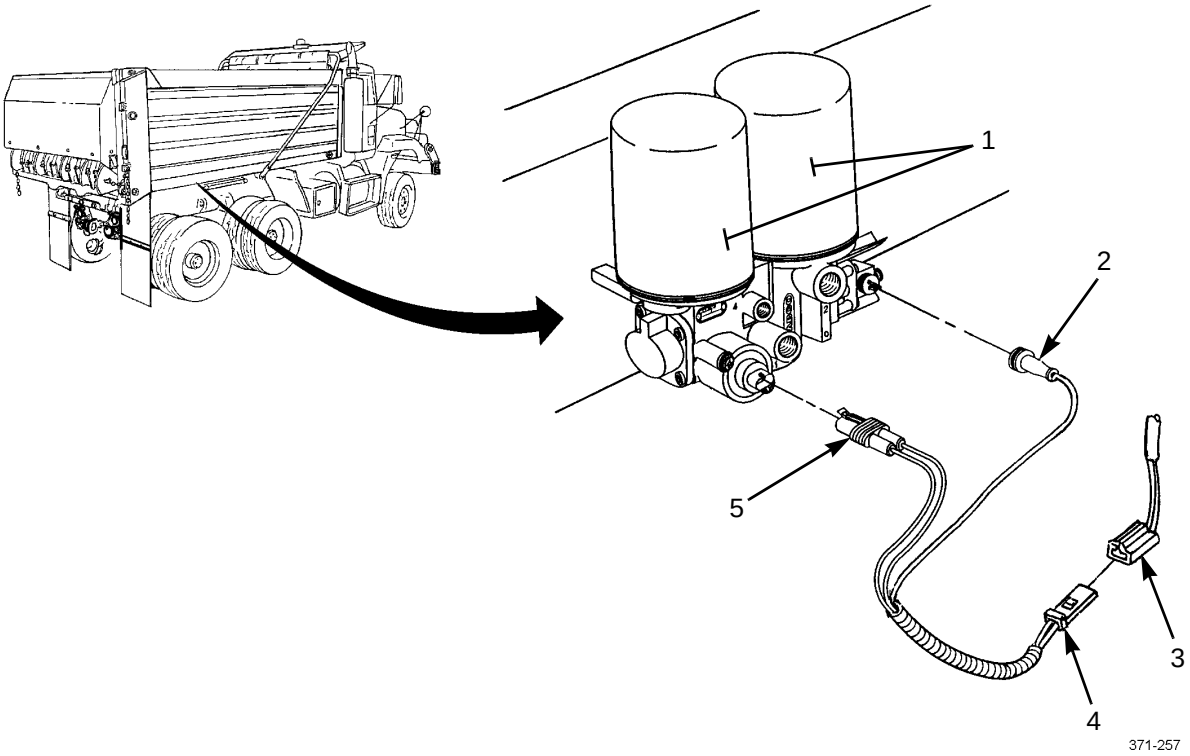

REMOVAL - CONTINUED

NOTE

Tag wires prior to removal to aid in installation.

3. Remove screw (6), lockwasher (7), and wire (8) of air dryer harness (11) from transmission (9). Discard lockwasher.
4. Remove nut (12), lockwasher (13), and wire (14) of air dryer harness (11) from ignition power terminal of backup light sending unit (10). Discard lockwasher.

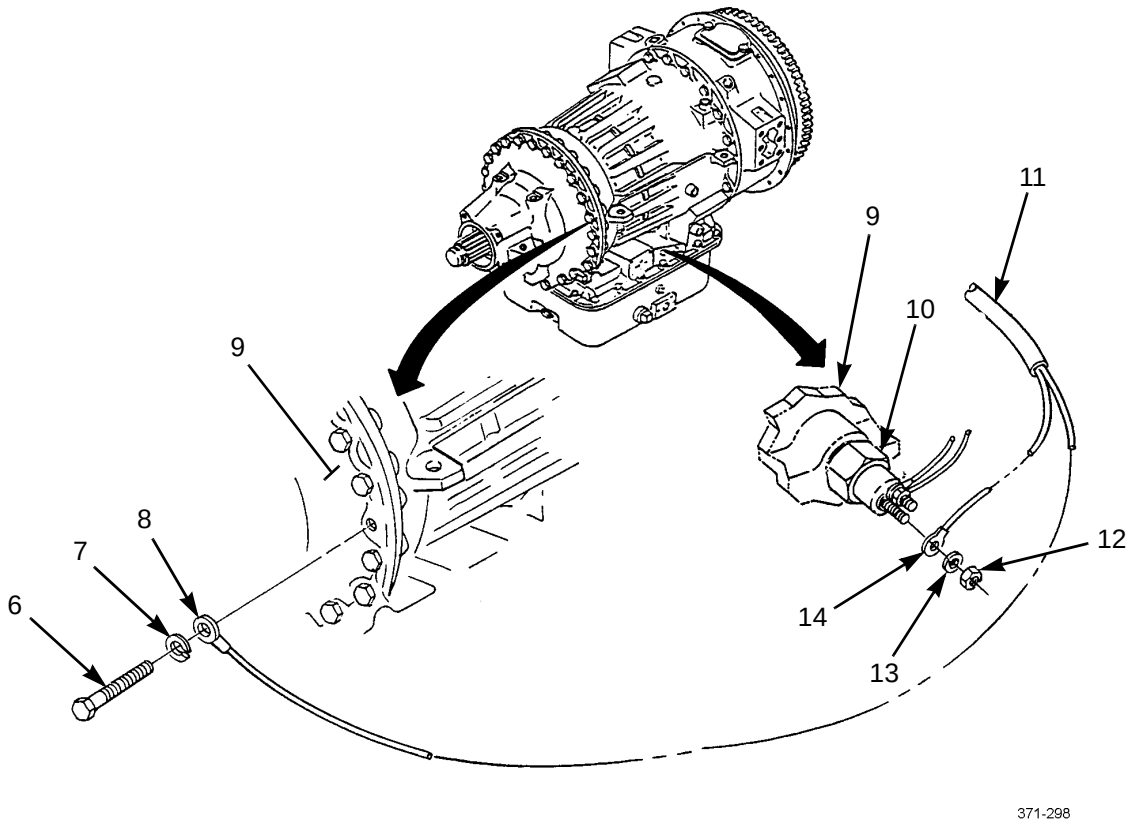

INSTALLATION

1. Install wire (14) of air dryer harness (11) to ignition power terminal of backup light sending unit (10). Secure with new lockwasher (13) and nut (12).

NOTE

Wire may be attached to any suitable ground at transmission or chassis.

INSTALLATION - CONTINUED

2. Position wire (8) of air dryer harness (11) to transmission (9).
3. Install new lockwasher (7) and screw (6). Tighten screw to 70-80 lb-ft (95-108 Nm).
4. Connect connectors (3 and 4), if separated.
5. Connect connector (2) and connector (5) to air dryers (1).

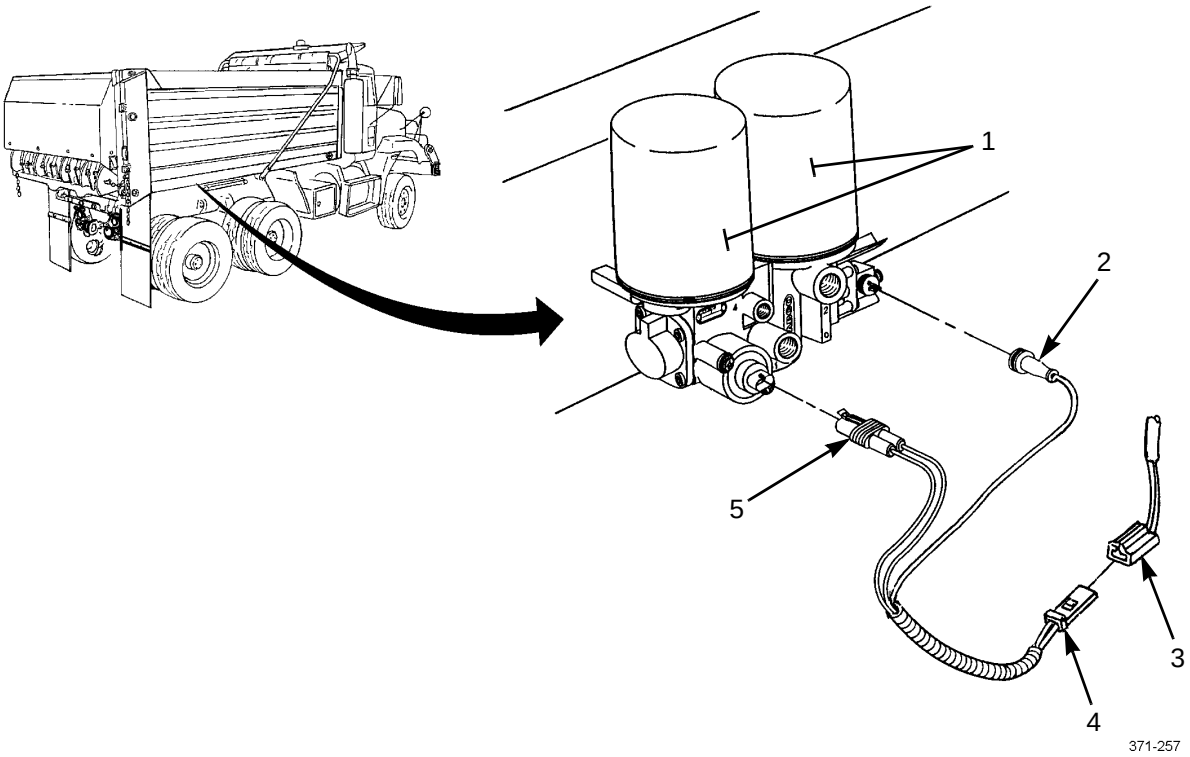

END OF WORK PACKAGE

COLLISION WARNING SYSTEM (CWS) ANTENNA ALIGNMENT 0134 00

THIS WORK PACKAGE COVERS

Vertical Alignment, Horizontal Alignment

INITIAL SETUP

Test Equipment

CTIS/CWS PC card (Item 65, WP 0306 00)

Tester, Pro-link diagnostic reader (Item 99, WP 0306 00)

Tools and Special Tools

Tool kit, general mechanic's (Item 102, WP 0306 00)

Level, digital (Item 26, WP 0306 00)

Support Equipment

Suitable Target Vehicle

Personnel Required

Three

Equipment Condition

Vehicle parked on level ground

NOTE

- To ensure accurate alignment of CWS antenna, vertical and horizontal ground surface angles must be known in relation to level and compensated for during antenna alignment.
- Always perform vertical alignment first.

VERTICAL ALIGNMENT

1. Place digital level (4) vertically on CWS antenna (1). Take reading to determine which direction antenna must be adjusted.
2. Loosen four screws (3) on side of CWS antenna (1) enough to allow repositioning of antenna without free travel.

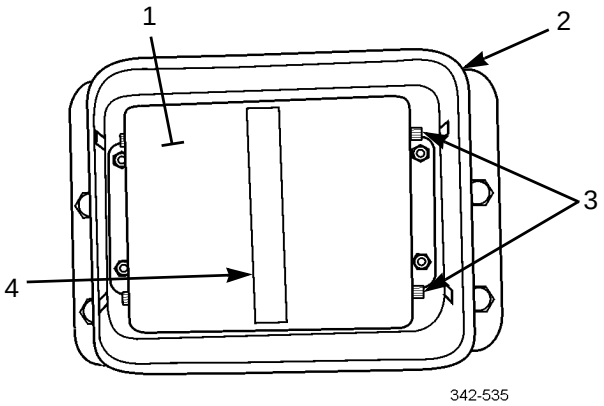

3. Holding digital level (4) vertically on CWS antenna (1), pivot top or bottom of antenna until reading on level is at least 1 degree below vertical (88.0-89.0 degrees).
4. Proceed to horizontal alignment.

HORIZONTAL ALIGNMENT

1. Place a straight edge horizontally across center of antenna protective guard (2).
2. Measure distance between right front of antenna face and straight edge. Record the distance.
3. Measure distance between left front of antenna face and straight edge. Record the distance.
4. If the measured distances are within 1/8 inch of each other, proceed to step 8. If not, proceed to next step.
5. Move antenna in required direction to achieve equal distances between antenna protective guard and straight edge.
6. Recheck vertical alignment reading.
7. Repeat steps 2, 3, and 6 until measured distances are within 1/8 inch (0.3175 cm) of each other.
8. Tighten four screws (3).
9. Connect PRO-LINK and load CWS PC card.
10. On PRO-LINK, go to Diagnostic Menu.
11. Select CHECKOUT and press ENTER.
12. Select ANTENNA TEST and press ENTER.

NOTE

To achieve maximum results, a flat, straight stretch of road is required and both vehicles must maintain consistent and constant lane position and speed.

13. With target vehicle driving between 150 and 200 feet (46 – 61 m) in front of host vehicle, observe azimuth reading on PRO-LINK. Reading must be +/- 0.2.
14. If reading exceeds +/- limit, stop vehicle and proceed to next step. If not, proceed to step 18.
15. Loosen four screws (3) on side of antenna (1) enough to allow repositioning of antenna without free travel.

NOTE

Perform the following adjustments while facing the antenna.

16. If reading exceeded limit on positive side, pivot right side of antenna away from bumper.
17. If reading exceeded limit on negative side, pivot left side of antenna away from bumper.
18. Tighten four screws (3).

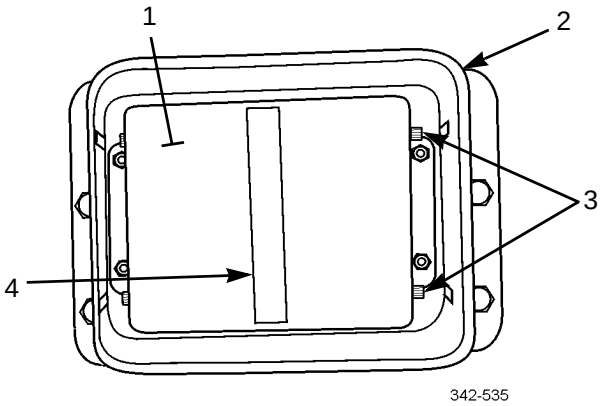

19. Repeat step 13.
20. Repeat vertical and horizontal alignment until criteria for both alignments are met.

END OF WORK PACKAGE

COLLISION WARNING SYSTEM (CWS) CENTRAL PROCESSING UNIT (CPU) REPLACEMENT (M915A3 OLD MODEL) 0135 00

THIS WORK PACKAGE COVERS

Removal, Installation

INITIAL SETUP

Tools and Special Tools

Tool kit, general mechanic's (Item 50, WP 0306 00)

Wrench set, socket attachment screwdriver, torx (Item 61, WP 0306 00)

References

WP 0134 00

Equipment Condition

Master battery switch in OFF position (TM 9-2320-302-10)

REMOVAL

1. Disconnect harness connector (1) from CPU (3).
2. Remove four screws (2), ground wire, and CPU (3) from cab wall.

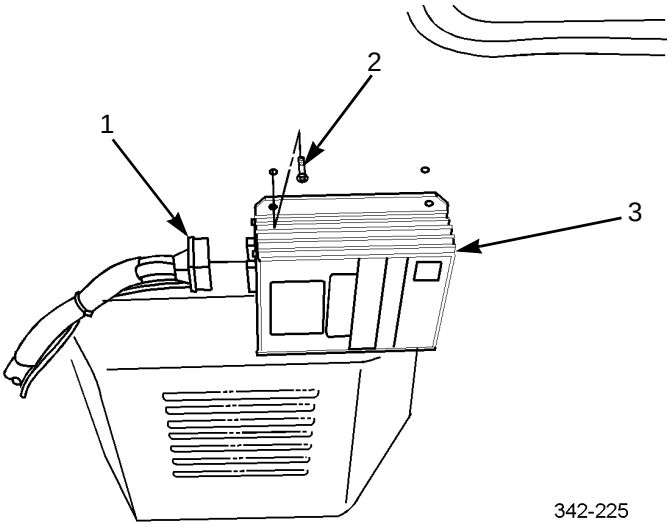

INSTALLATION

1. Install ground wire and CPU (3) on cab wall with four screws (2).
2. Connect harness connector (1) to CPU (3).
3. Align antenna assembly (WP 0134 00).

END OF WORK PACKAGE

COLLISION WARNING SYSTEM (CWS) CENTRAL PROCESSING UNIT (CPU) REPLACEMENT (M915A3 NEW MODEL, M916A3) 0136 00

THIS WORK PACKAGE COVERS

Removal, Installation

INITIAL SETUP

Tools and Special Tools

Tool kit, general mechanic's (Item 50, WP 0306 00)

Wrench set, socket attachment, screwdriver, torx (Item 61, WP 0306 00)

Materials/Parts

Straps, tiedown (Item 33, WP 0305 00)

Tags, marker (Item 34, WP 0305 00)

Materials/Parts - Continued

Tape, insulation, electrical (Item 37, WP 0305 00)

References

WP 0134 00

Equipment Condition

Master battery switch in OFF position (TM 9-2320-302-10)

REMOVAL

NOTE

- Remove and discard tiedown straps and electrical tape as necessary.
- Tag electrical cables to ensure correct installation.

1. Behind passenger seat, remove two screws (3), washers (4), and plastic cover (1) from plate (2).

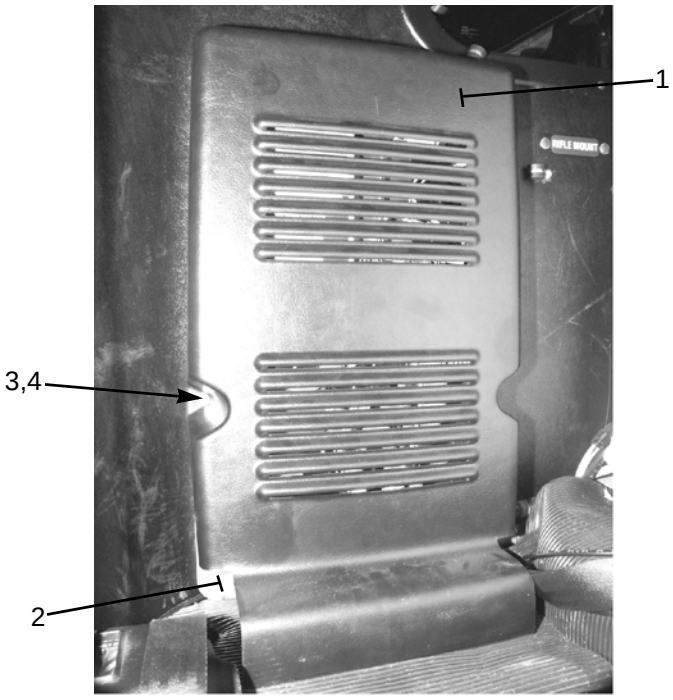

371-160

COLLISION WARNING SYSTEM (CWS) CENTRAL PROCESSING UNIT (CPU) REPLACEMENT (M915A3 NEW MODEL, M916A3) - CONTINUED 0136 00

REMOVAL - CONTINUED

2. At bottom of CPU (5), remove nut (7), lockwasher (8), and ground wire (6).
3. Disconnect connector (10) of CWS wiring harness (9) from CPU (5).

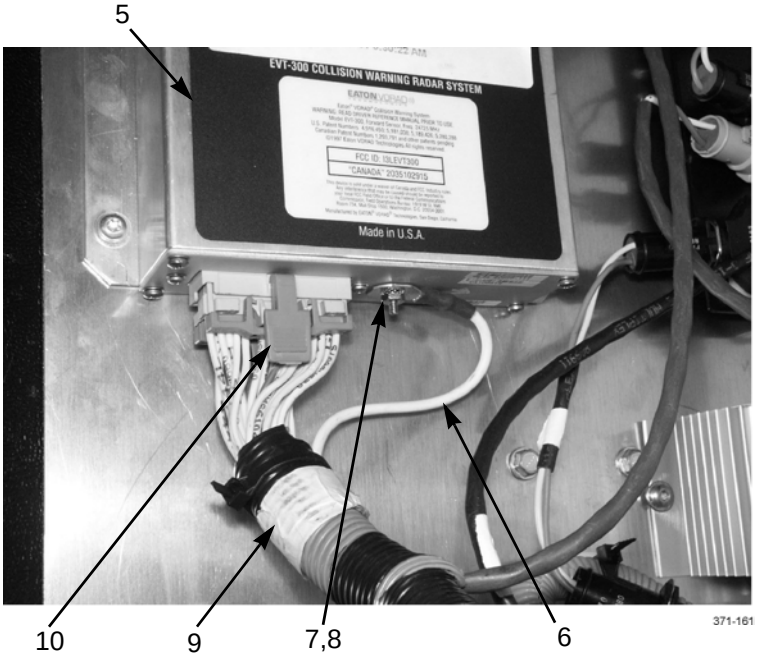

4. Remove four screws (11), washers (12), and CPU (5) from plate (2).

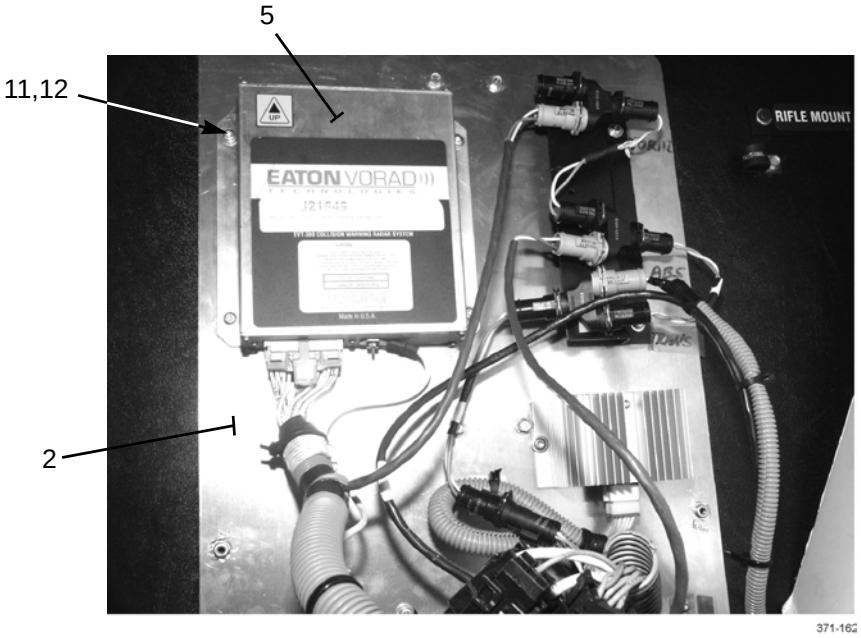

INSTALLATION

1. Install CPU (5) to plate (2) with four washers (12) and screws (11).
2. Connect connector (10) of CWS wiring harness (9) to bottom of CPU (5).
3. Install ground wire (6) to CPU (5) with lockwasher (8) and nut (7).
4. Install plastic cover (1) to plate (2) with two washers (4) and screws (3).

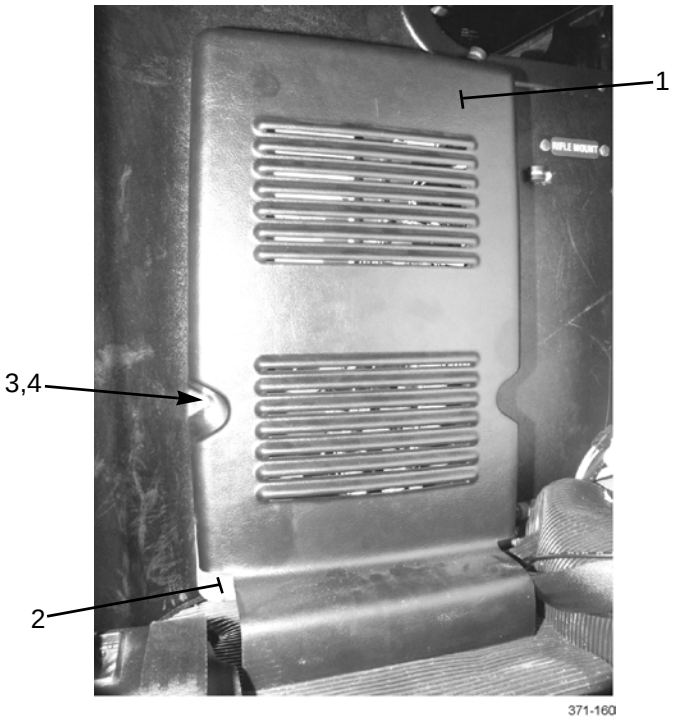

5. Align antenna assembly (WP 0134 00).

END OF WORK PACKAGE

COLLISION WARNING SYSTEM (CWS) DRIVER DISPLAY UNIT (DDU) REPLACEMENT (M915A3, M916A3) 0137 00

THIS WORK PACKAGE COVERS

Removal, Installation

INITIAL SETUP

Tools and Special Tools

Tool kit, general mechanic's (Item 50, WP 0306 00)

References

TM 9-2320-302-10

Equipment Condition

Master battery switch in OFF position (TM 9-2320-302-10)

REMOVAL

1. Remove five torx screws (1) and pull out on instrument panel cover (2) to gain access to components behind cover.
2. Remove two torx screws (3) and clip-on nuts (4) to free DDU (5).

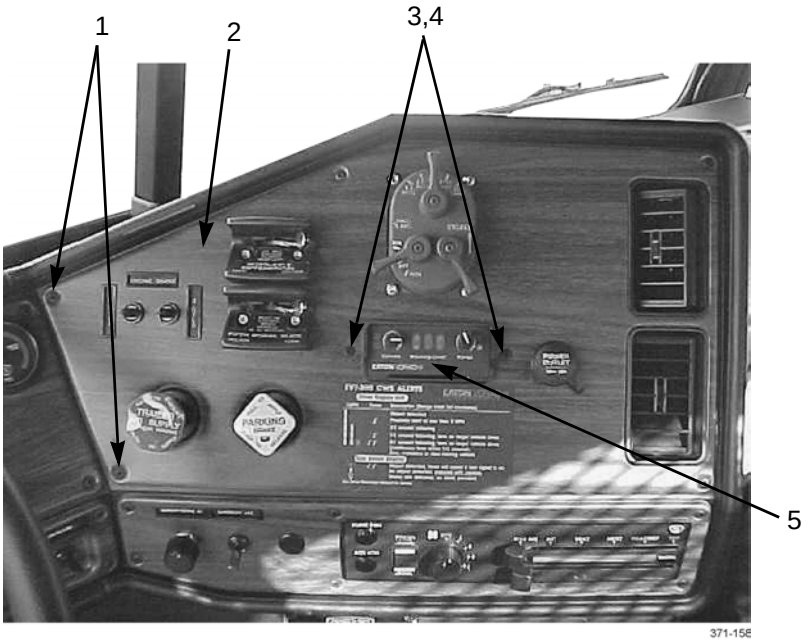

COLLISION WARNING SYSTEM (CWS) DRIVER DISPLAY UNIT (DDU) REPLACEMENT (M915A3, M916A3) - CONTINUED 0137 00

REMOVAL - CONTINUED

3. Disconnect wiring harness connector (7) from DDU (5).
4. Remove DDU (5) and mounting bracket (8) from instrument panel cover (2).
5. Remove tiedown strap (6) and discard. Loosen two setscrews and remove DDU (5) from mounting bracket (8).

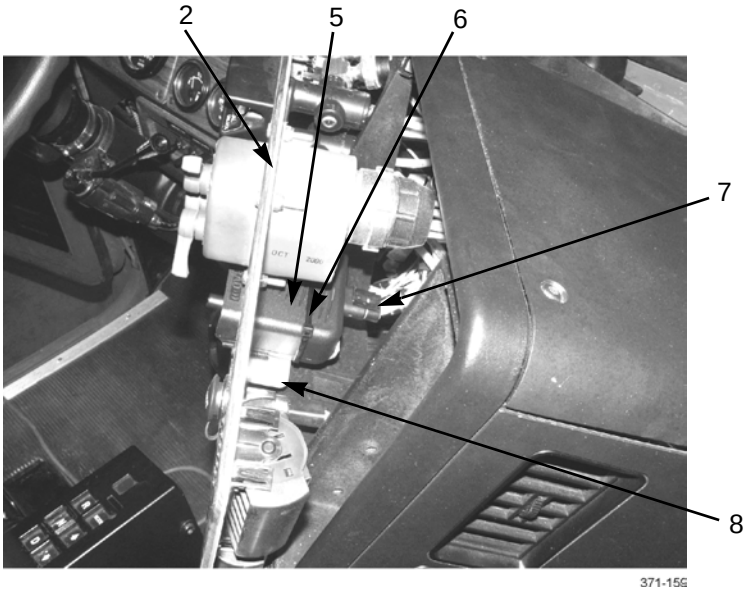

INSTALLATION

1. Install DDU (5) to mounting bracket (8) and tighten two setscrews. Install new tiedown strap (6).
2. Connect wiring harness connector (7) to rear of DDU (5).
3. Position DDU (5) and mounting bracket (8) through opening in instrument panel cover (2).

NOTE

Ensure that two clip-on nuts are positioned on mounting bracket before installing torx screws in step 4.

4. Secure DDU (5) with two torx screws (3) and clip-on nuts (4).
5. Install instrument panel cover (2) with five torx screws (1).

REMOVAL - CONTINUED

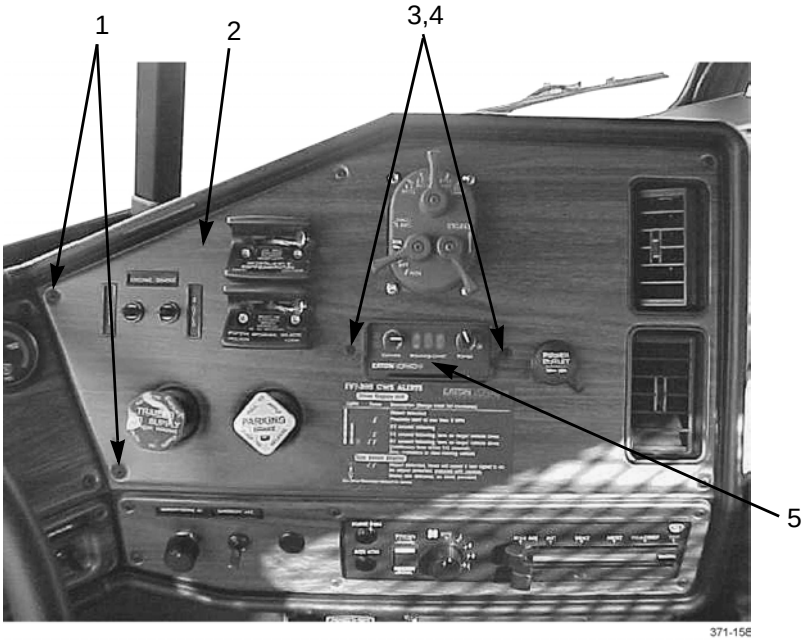

6. Perform CWS self-test (TM 9-2320-302-10).

END OF WORK PACKAGE

COLLISION WARNING SYSTEM (CWS) SIDE SENSOR REPLACEMENT (M915A3, M916A3) 0138 00

THIS WORK PACKAGE COVERS

Removal, Installation

INITIAL SETUP

Tools and Special Tools

Tool kit, general mechanic's (Item 50, WP 0306 00)

Materials/Parts

Nut, lock (P/N M45913/1-4CG5C) (8)

References

TM 9-2320-302-10

Equipment Condition

Master battery switch in OFF position (TM 9-2320-302-10)

REMOVAL

NOTE

Although slightly different in configuration, all side sensors and brackets are removed and replaced in the same manner.

1. Disconnect chassis harness connector (8) from side sensor harness connector (9).
2. For diamond-shaped sensor, remove four screws (2), four nuts (6), and side sensor (1) from bracket (7).
3. For round sensor, remove three screws (2), three nuts (6), and side sensor (1) from bracket (7).
4. Remove four screws (3), eight washers (4), four nuts (5), and bracket (7).

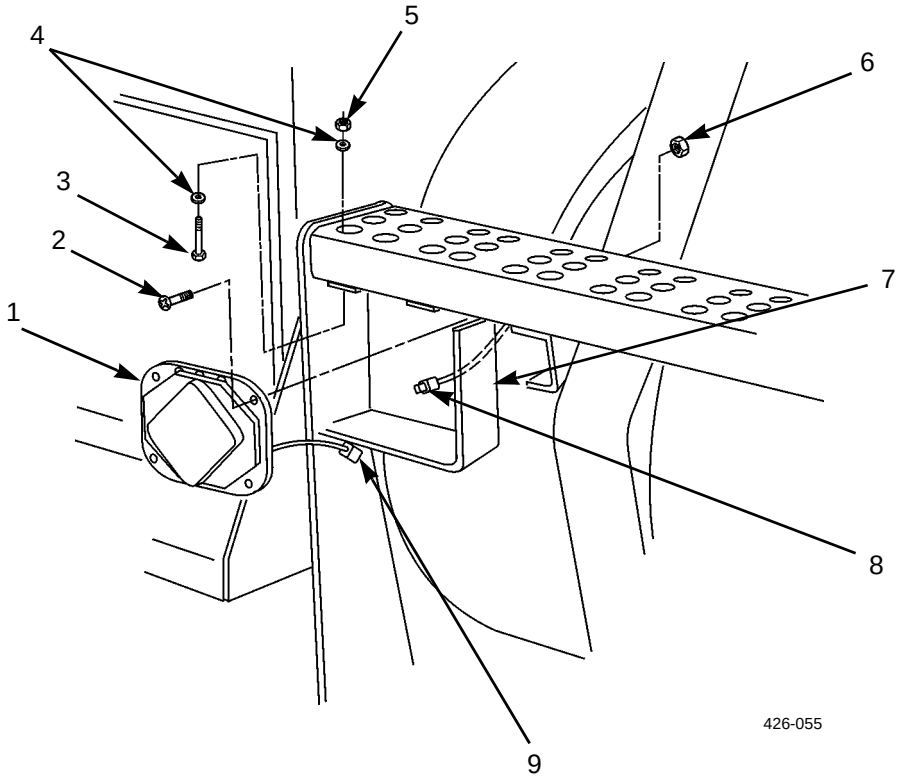

INSTALLATION

1. Position bracket (7) and install four screws (3), eight washers (4), and four nuts (5).
2. For diamond-shaped sensor, position side sensor (1) and install four screws (2) and four nuts (6).
3. For round sensor, position side sensor (1) and install three screws (2) and three nuts (6).
4. Connect side sensor harness connector (9) to chassis harness connector (8).
5. Perform CWS self-test (TM 9-2320-302-10).

END OF WORK PACKAGE

COLLISION WARNING SYSTEM (CWS) SIDE SENSOR DISPLAY REPLACEMENT (M915A3, M916A3) 0139 00

THIS WORK PACKAGE COVERS

Removal, Installation

INITIAL SETUP

Tools and Special Tools

Tool kit, general mechanic's (Item 50, WP 0306 00)

Materials/Parts

Strap, tiedown (Item 33, WP 0305 00)

References

TM 9-2320-302-10

Equipment Condition

Master battery switch in OFF position (TM 9-2320-302-10)

REMOVAL

1. Remove tiedown strap from wiring harness connector (4). Discard tiedown strap.
2. Disconnect wiring harness connector (4) from side sensor display (1).
3. Remove two locknuts (3) and side sensor display (1) from mounting bracket (2).
4. If damaged, remove two screws and mounting bracket (2) from cab.

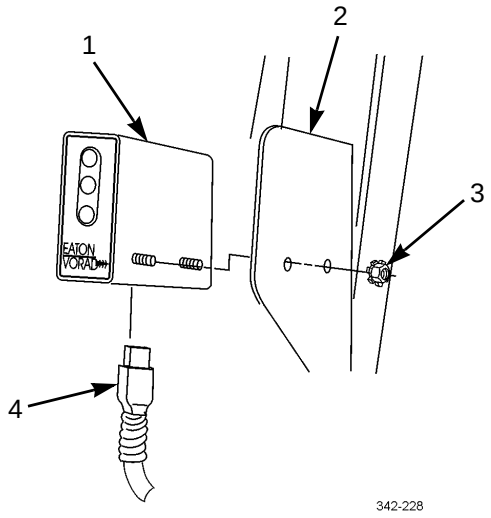

INSTALLATION

1. If removed, install mounting bracket (2) to cab with two screws.

NOTE

Replacement side sensor display comes with new locknuts.

2. Install side sensor display (1) to mounting bracket (2) with two locknuts (3).
3. Connect wiring harness connector (4) to side sensor display (1).
4. Install new tiedown strap to secure wiring harness connector (4) in place.

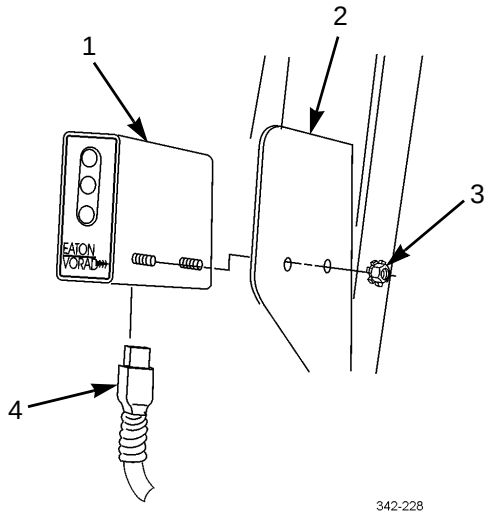

5. Perform CWS self-test (TM 9-2320-302-10).

END OF WORK PACKAGE

COLLISION WARNING SYSTEM (CWS) ANTENNA ASSEMBLY REPLACEMENT (M915A3, M916A3) 0140 00

THIS WORK PACKAGE COVERS

Removal, Installation

INITIAL SETUP

Tools and Special Tools

Tool kit, general mechanic's (Item 50, WP 0306 00)

Materials/Parts

Nut, lock (P/N M45913/1-4CG5C) (4)

Nut, lock (P/N M45913/1-8CG5C) (4)

References

WP 0134 00

Equipment Condition

Master battery switch in OFF position (TM 9-2320-302-10)

REMOVAL

1. Remove four locknuts (1) and washers (2) and pull CWS antenna (3) out from bracket (4). Discard locknuts.
2. Disconnect wiring harness connector (5) from CWS antenna (3). Remove antenna.

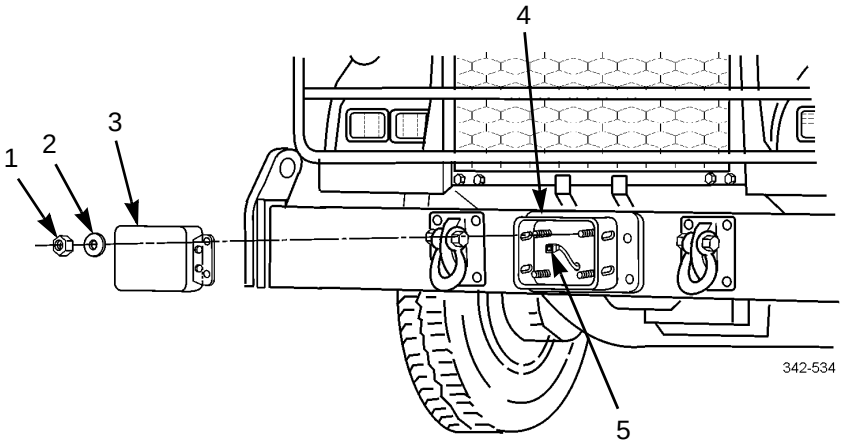

3. Remove four locknuts (7), screws (6), eight washers (8), and bracket (4) from front bumper of vehicle. Discard locknuts.

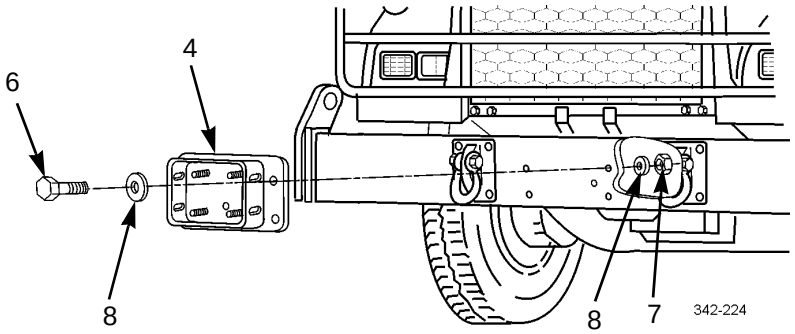

INSTALLATION

1. Install bracket (4) to front bumper of vehicle with four screws (6), eight washers (8), and four new locknuts (7).

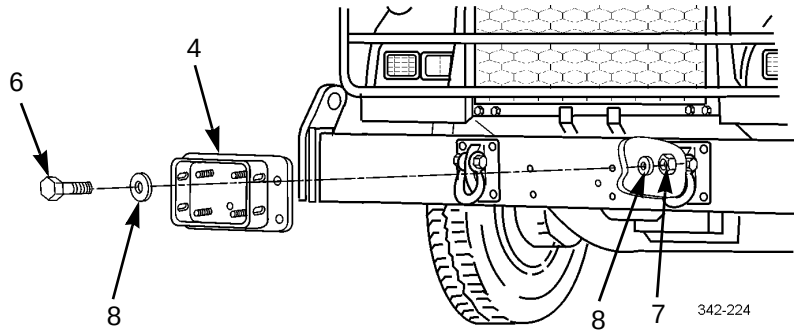

2. Connect wiring harness connector (5) to CWS antenna (3).
3. With “TOP” lettering on top, install CWS antenna (3) on bracket (4) with four washers (2) and new locknuts (1).

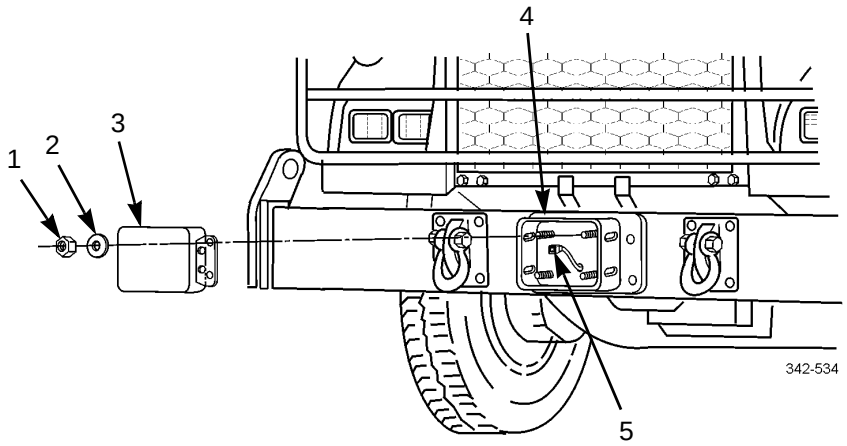

4. Align CWS antenna assembly (WP 0134 00).

END OF WORK PACKAGE

COLLISION WARNING SYSTEM (CWS) CENTRAL PROCESSING UNIT (CPU) WIRING HARNESS REPLACEMENT (M915A3, M916A3) 0141 00

THIS WORK PACKAGE COVERS

Removal, Installation

INITIAL SETUP

Tools and Special Tools

Tool kit, general mechanic's (Item 50, WP 0306 00)

Wrench set, socket attachment, screwdriver, torx (Item 61, WP 0306 00)

Materials/Parts

Caulk, strip (Item 8, WP 0305 00)

Straps, tiedown (Item 33, WP 0305 00)

Tags, marker (Item 34, WP 0305 00)

Tape, insulation, electrical (Item 37, WP 0305 00)

References

WP 0084 00

WP 0151 00

Equipment Condition

Master battery switch in OFF position (TM 9-2320-302-10)

NOTE

Replacement of CWS CPU wiring harness involves pulling harness through transmission access tunnel. It may be necessary to remove connectors from ends of harness to facilitate this procedure. Refer to WP 0151 00 for electrical connector maintenance procedures.

COLLISION WARNING SYSTEM (CWS) CENTRAL PROCESSING UNIT (CPU) WIRING HARNESS REPLACEMENT (M915A3, M916A3) - CONTINUED 0141 00

REMOVAL

NOTE

- Remove and discard tiedown straps and electrical tape as necessary.
- Tag wires and connectors to ensure correct installation.

1. Behind passenger seat, remove two screws (3), washers (4), and plastic cover (1) from plate (2).

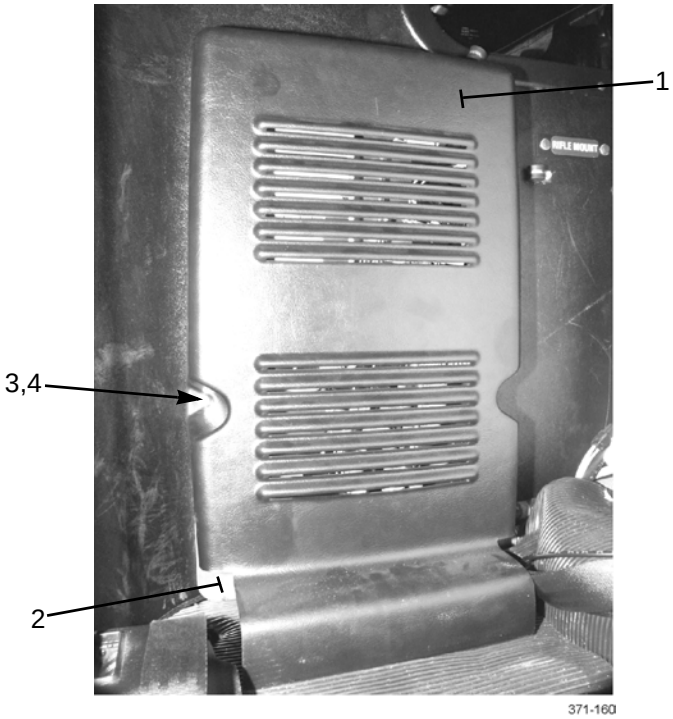

2. At bottom of CWS CPU (5), disconnect connector (12) of CWS CPU wiring harness (11).
3. Disconnect connector (6) from bus connector (7).
4. Remove nut (8), lockwasher (9), and ground wire (10) from CPU (5).

COLLISION WARNING SYSTEM (CWS) CENTRAL PROCESSING UNIT (CPU) WIRING HARNESS REPLACEMENT (M915A3, M916A3) - CONTINUED

0141 00

REMOVAL - CONTINUED

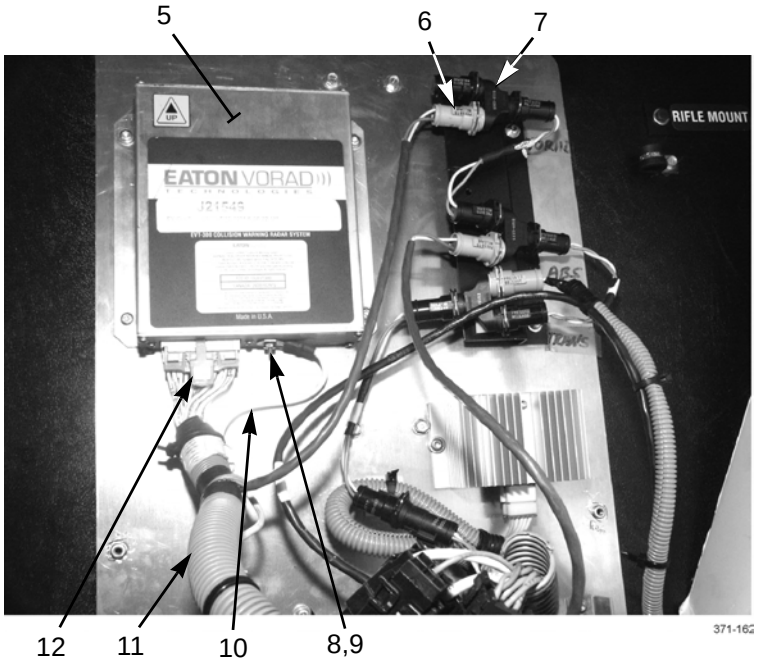

5. Trace ground wire (10) to floor of cab, pulling back floor mat and insulation pad to gain access.
6. Remove screw and terminal of ground wire (10) from floor of cab.
7. Trace CWS CPU wiring harness (11) to bulkhead connector (13) at cab floor.

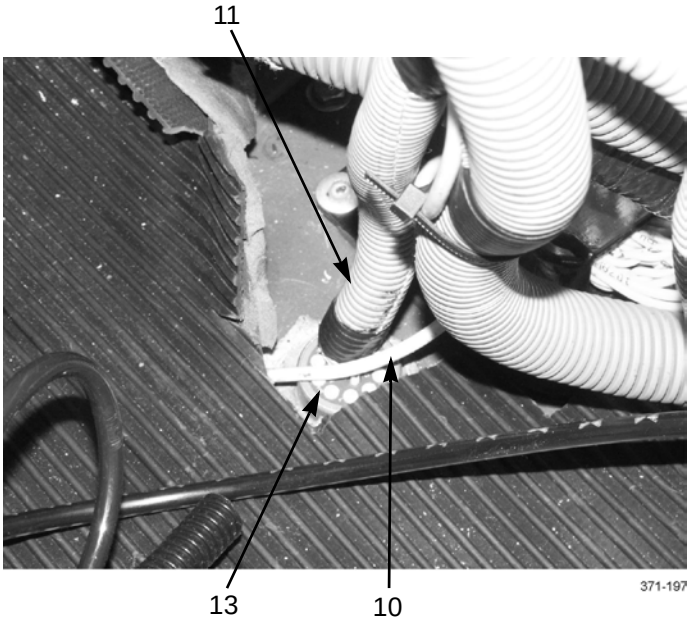

REMOVAL - CONTINUED

8. Under right-rear corner of cab, disconnect CWS wiring harness connector (14) from bulkhead connector (13).

9. Remove nut (15) and lockwasher (16) from bulkhead connector (13) and push connector up into cab.

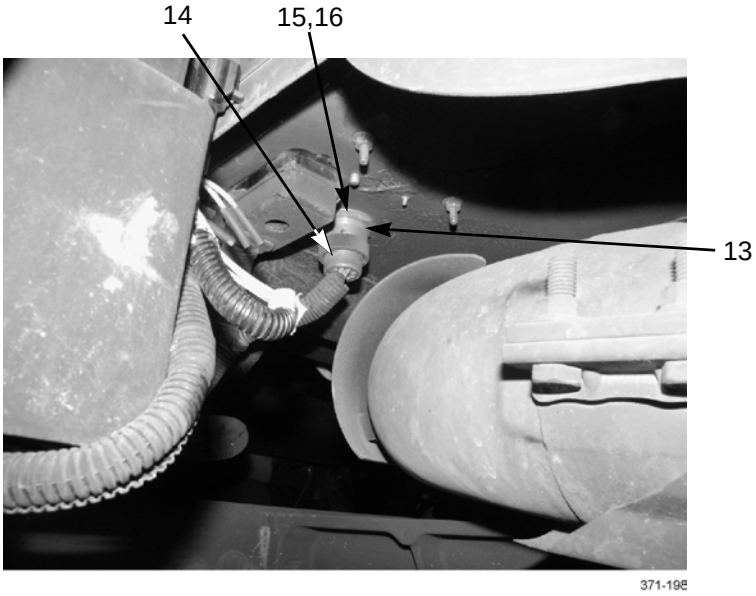

10. Remove three screws (17) and access cover (18) at passenger side of cab floor.

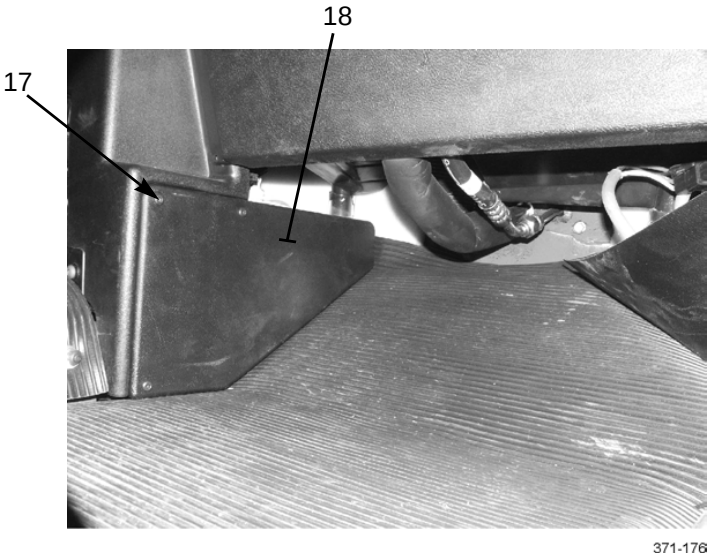

11. To improve access to wiring, remove fuse panel cover at floor between driver and passenger seats (WP 0084 00).

12. Trace CWS CPU wiring harness (11) forward through transmission access tunnel (19).

COLLISION WARNING SYSTEM (CWS) CENTRAL PROCESSING UNIT (CPU) WIRING HARNESS REPLACEMENT (M915A3, M916A3) - CONTINUED 0141 00

REMOVAL - CONTINUED

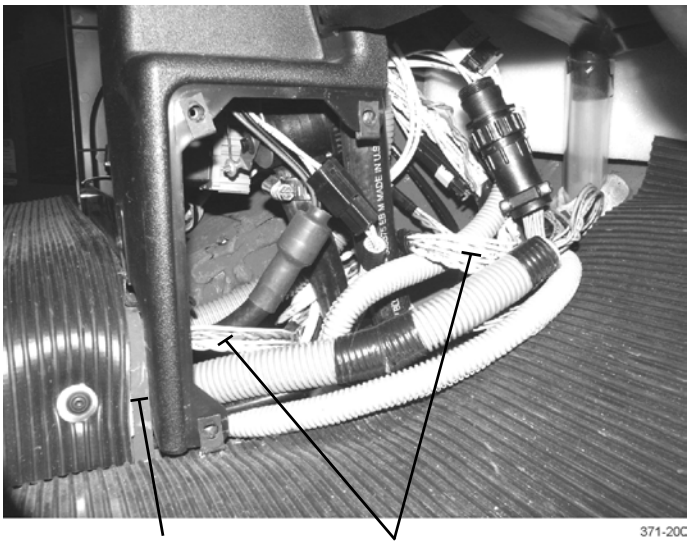

13. At side sensor display (21) on right-side door pillar, disconnect connector (20) from display.

NOTE

Branch of CWS CPU wiring harness from side sensor display is routed behind passenger-side kick panels and glove box.

14. Remove screw (22) and clamp (23) at door pillar to free wiring harness.
15. Trace branch of CWS CPU wiring harness (11) from side sensor display (21) back toward transmission access tunnel (19).

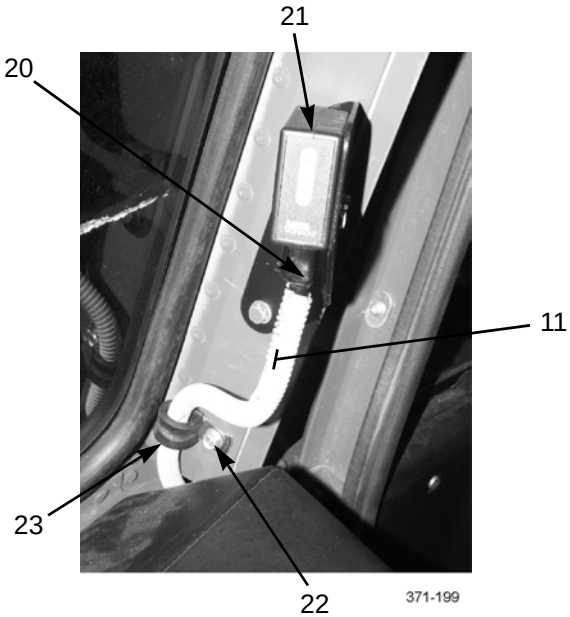

REMOVAL - CONTINUED

16. At right-side instrument panel, remove five screws (24) and pull out on instrument panel cover (25) to gain access to wiring behind panel.

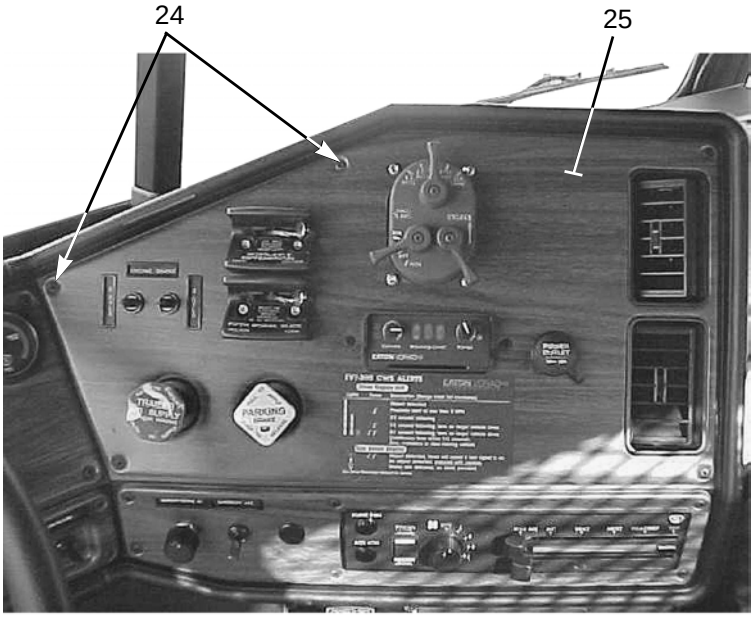

17. Disconnect connector (27) from driver display unit (DDU) (26).
18. Trace branch of CWS CPU wiring harness (11) from DDU (26) back toward transmission access tunnel (19).

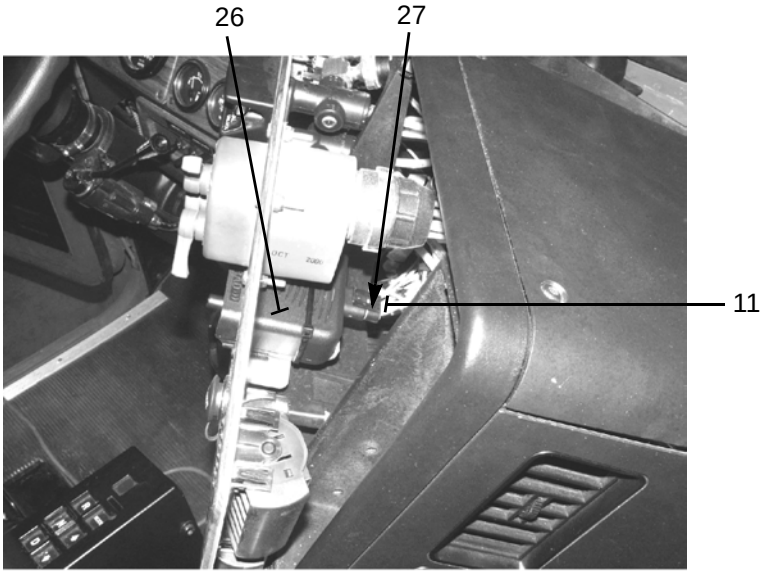

19. Tie a suitable lacing wire or rope to CWS CPU wiring harness (11). Remove wiring harness from vehicle by pulling harness rearward through transmission access tunnel (19). DO NOT remove lacing wire or rope from tunnel.

COLLISION WARNING SYSTEM (CWS) CENTRAL PROCESSING UNIT (CPU) WIRING HARNESS REPLACEMENT (M915A3, M916A3) - CONTINUED 0141 00

REMOVAL - CONTINUED

20. As required, remove conduit from CWS CPU wiring harness (11).

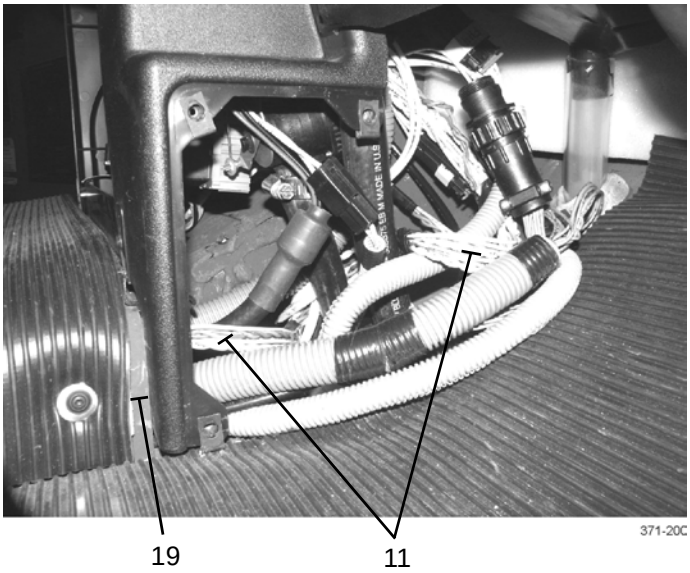

INSTALLATION

NOTE

Install new tiedown straps and electrical tape as required.

1. If removed, install conduit to CWS CPU wiring harness (11).
2. Position CWS CPU wiring harness (11) between points of connection.
3. Tie lacing wire or rope to CWS CPU wiring harness (11). Pull wiring harness forward through transmission access tunnel (19).
4. Route CWS CPU wiring harness (11) to point of connection at DDU (26) at right-side instrument panel.
5. Connect connector (27) to DDU (26).

INSTALLATION - CONTINUED

6. Install instrument panel cover (25) with five screws (24).

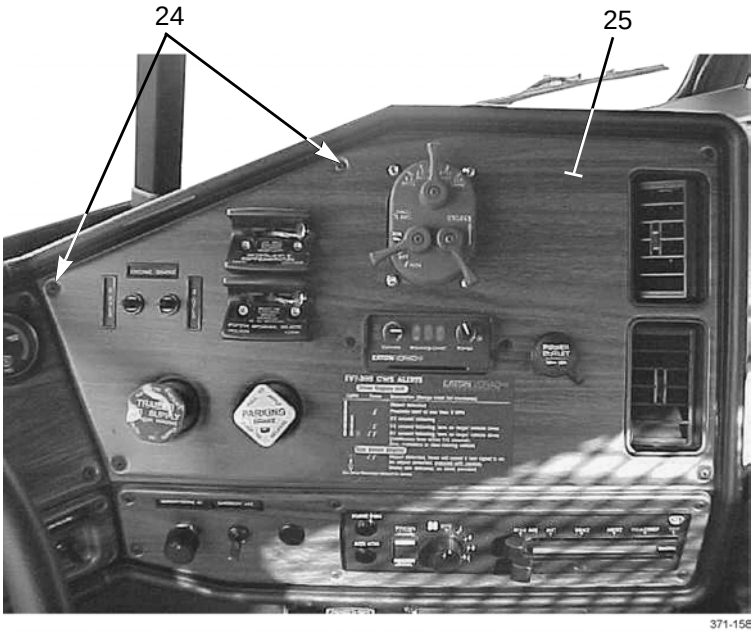

NOTE

Branch of CWS CPU wiring harness to side sensor display is routed behind passenger-side kick panels and glove box.

7. Route CWS CPU wiring harness (11) to point of connection at side sensor display (21).
8. Connect connector (20) to side sensor display (21).
9. Secure CWS CPU wiring harness (11) to door pillar with clamp (23) and screw (22).

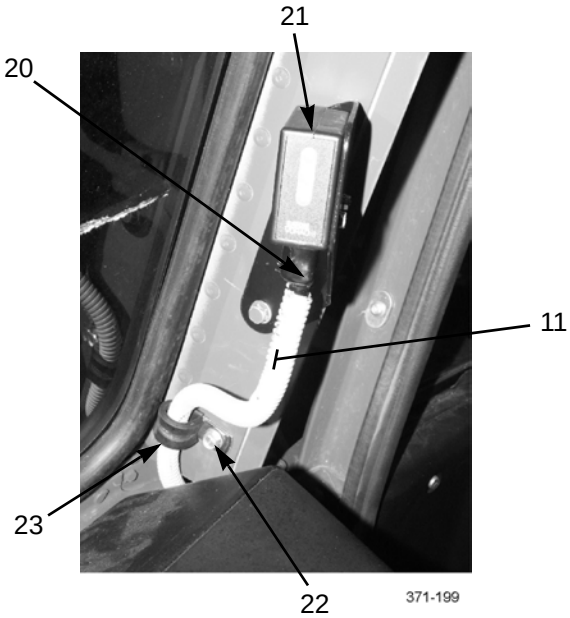

INSTALLATION - CONTINUED

10. Install fuse panel cover (WP 0084 00).
11. Install access cover (18) with three screws (17).

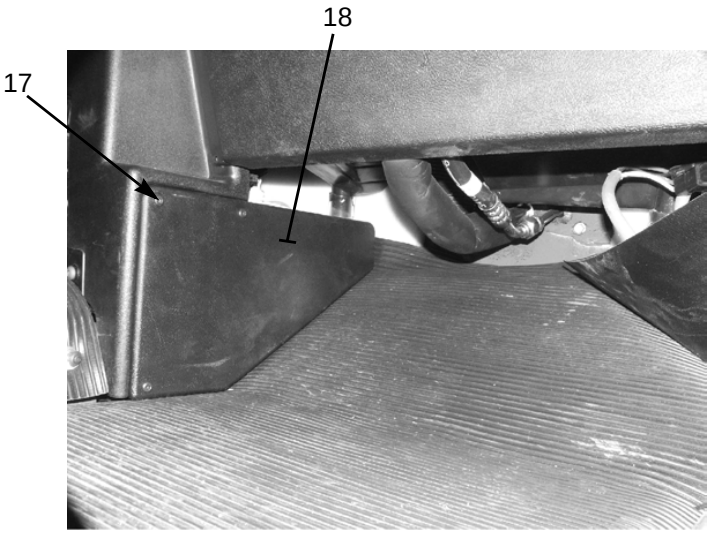

371-176

NOTE

Use strip caulk to provide a moisture-proof seal.

12. Position bulkhead connector (13) at hole in cab floor and secure with lockwasher (16) and nut (15).
13. Connect CWS wiring harness connector (14) to bulkhead connector (13).

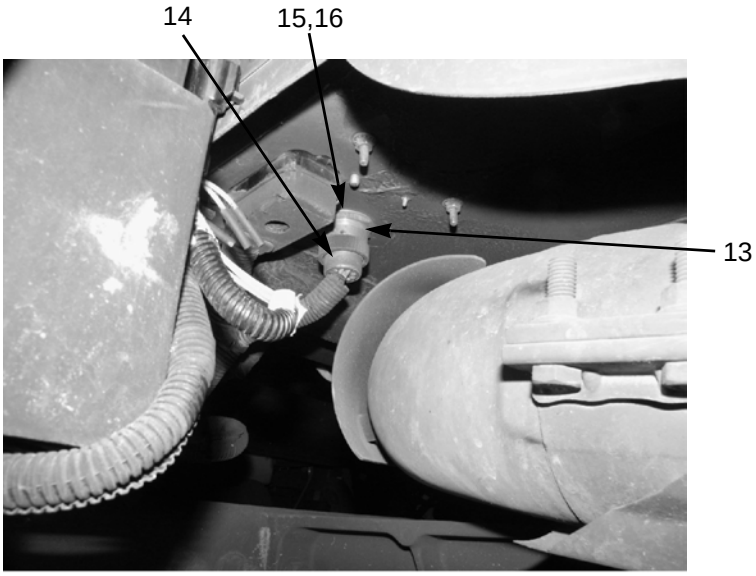

371-198

INSTALLATION - CONTINUED

14. Install terminal of ground wire (10) to floor of cab with screw.

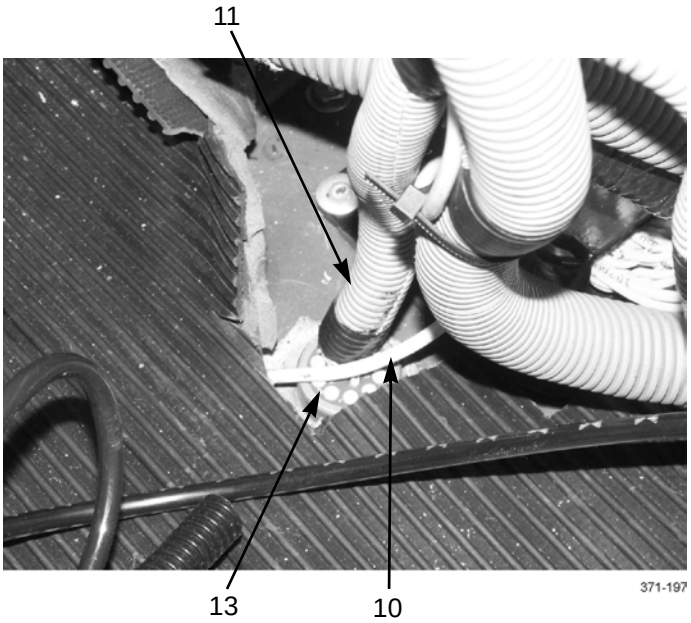

15. Install terminal of ground wire (10) to bottom of CWS CPU (5) with lockwasher (9) and nut (8).
16. Connect connector (6) to bus connector (7).
17. Connect connector (12) of CWS CPU wiring harness (11) to CWS CPU (5).

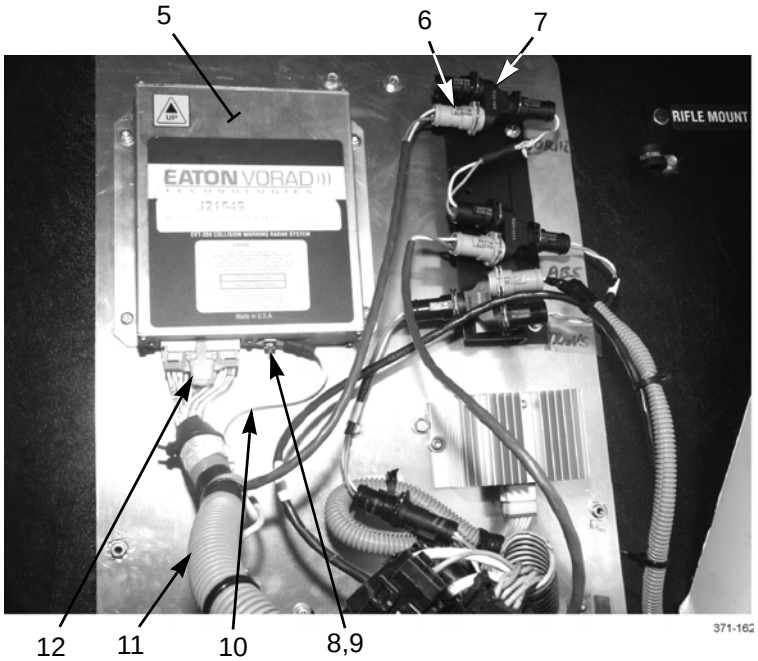

INSTALLATION - CONTINUED

18. Install plastic cover (1) to plate (2) with two washers (4) and screws (3).

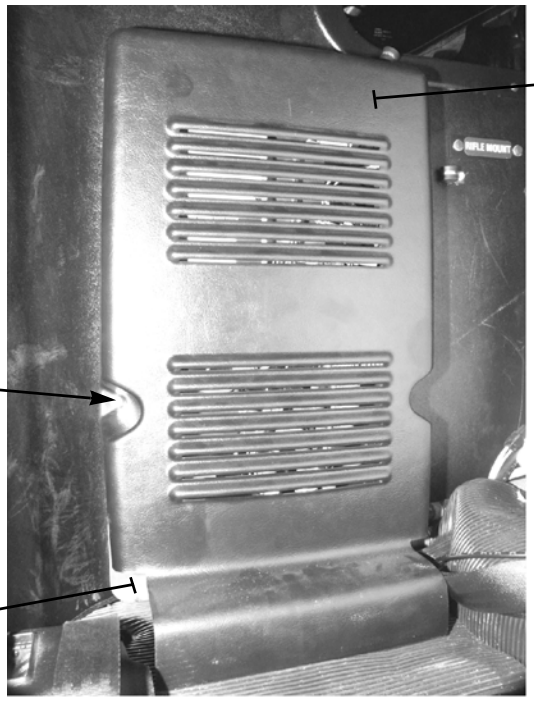

371-160

END OF WORK PACKAGE

ELECTRIC HORN REPLACEMENT 0142 00

THIS WORK PACKAGE COVERS

Horn Removal, Bracket Removal, Bracket Installation, Horn Installation

INITIAL SETUP

Tools and Special Tools

Tool kit, general mechanic's (Item 50, WP 0306 00)

Materials/Parts

Strap, tiedown (Item 33, WP 0305 00)

Equipment Condition

Master battery switch in OFF position (TM 9-2320-302-10)

HORN REMOVAL

1. Disconnect connector (5) of cab wiring harness from horn (6).
2. Remove nut (7) and horn (6) from bracket (4).

BRACKET REMOVAL

Remove screw (2), washer (3), and horn bracket (4) from windshield wiper bracket (1).

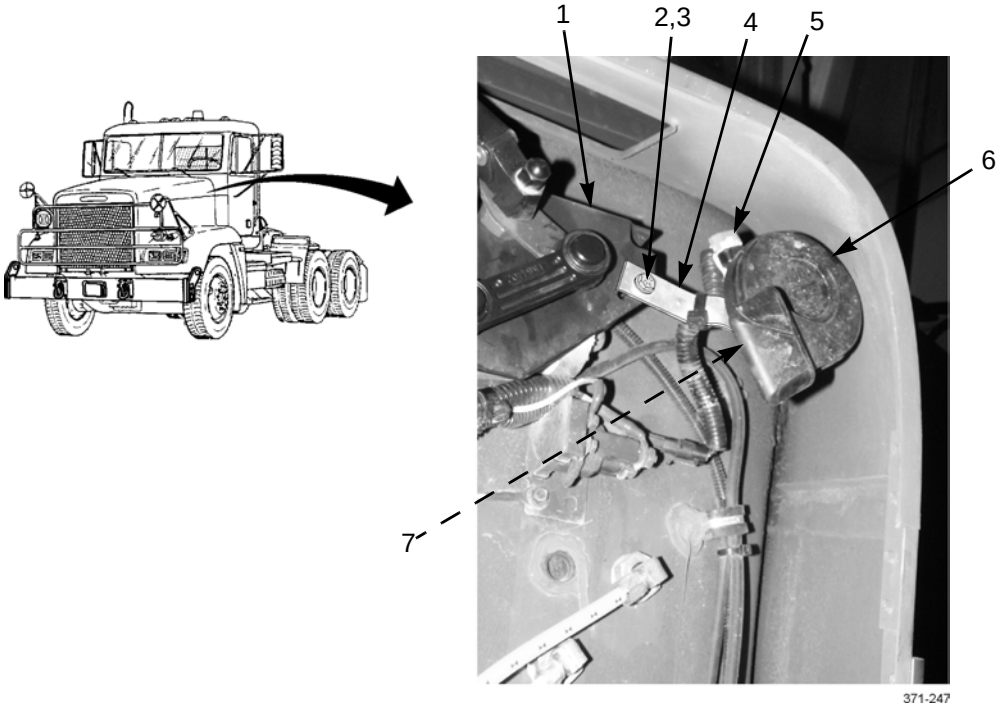

BRACKET INSTALLATION

Install horn bracket (4) to windshield wiper bracket (1) with washer (3) and screw (2).

HORN INSTALLATION

1. Install horn (6) to horn bracket (4) with nut (7).
2. Connect connector (5) of cab wiring harness to horn (6).

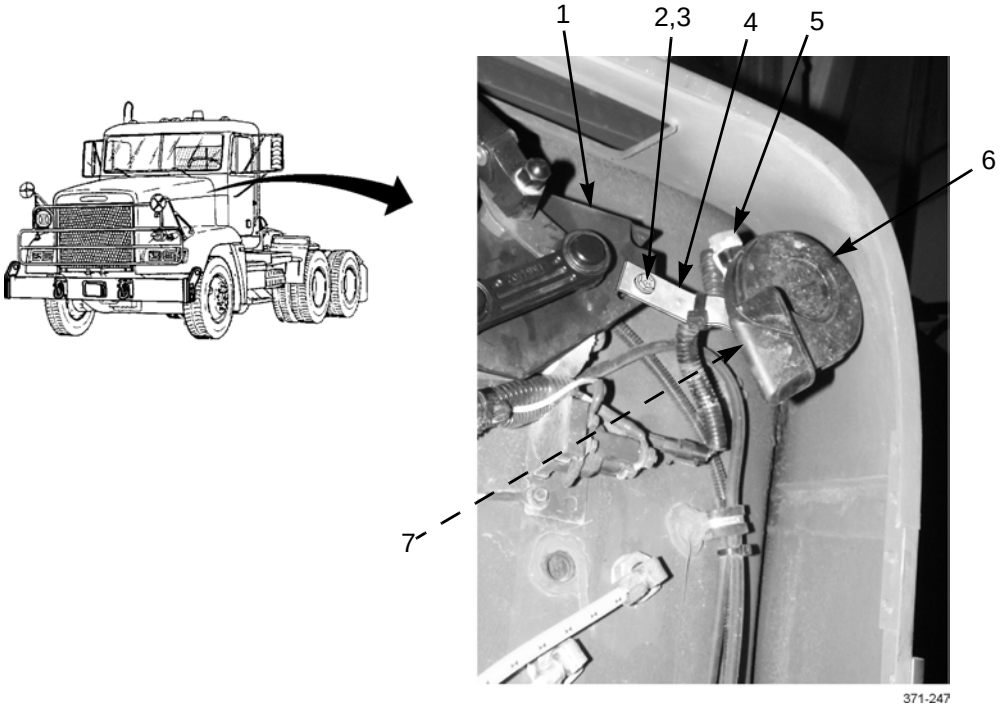

END OF WORK PACKAGE

BATTERY REPLACEMENT (STANDARD) 0143 00

THIS WORK PACKAGE COVERS

Battery Removal, Battery Hold-down Pin Removal, Battery Hold-down Pin Installation, Battery Installation, Charging

INITIAL SETUP

Tools and Special Tools

Tool kit, general mechanic's (Item 50, WP 0306 00)

Gloves, chemical (Item 13, WP 0306 00)

Goggles, industrial (Item 14, WP 0306 00)

Materials/Parts

Nut, lock (P/N M45913/1-5CBB) (6)

Nut, lock (P/N M45913/1-4CG5C (18)

Equipment Condition

Battery cables removed (WP 0145 00)


WARNING

- To avoid eye injury, eye protection is required when working around batteries. DO NOT smoke, use open flame, make sparks or create other ignition sources around batteries. If a battery is giving off gases, it can explode and cause injury to personnel. Remove all jewelry such as rings, ID tags, watches, and bracelets. If jewelry or a tool contacts a battery terminal, a direct short will result in instant heating, injury to personnel, and damage to equipment.
- Sulfuric acid contained in batteries can cause serious burns. Always wear goggles, gloves, and apron. If battery corrosion or electrolyte makes contact with skin, eyes or clothing, take immediate action to stop the corrosive burning effects. Failure to follow these procedures may result in death or serious injury to personnel.

BATTERY REMOVAL

NOTE

Note position of batteries for installation.

1. Remove six locknuts (3), washers (2), and two retaining straps (1) from battery box (7). Discard locknuts.
2. Remove four batteries (4) from battery box (7).

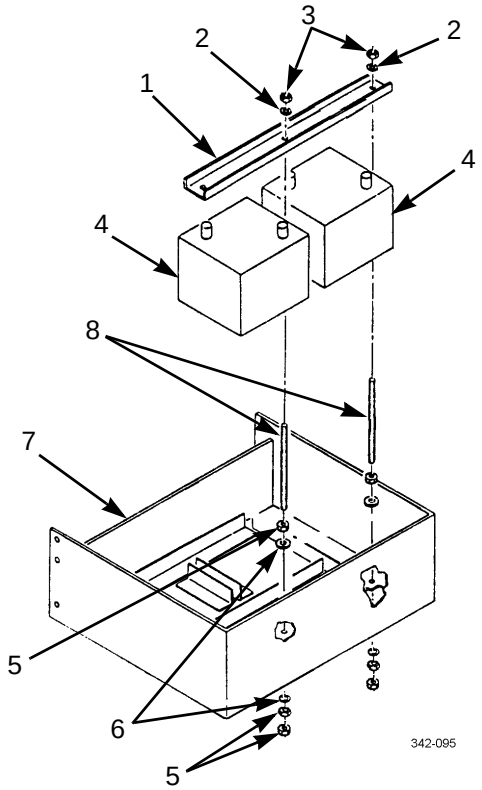

BATTERY HOLD-DOWN PIN REMOVAL

If damaged, remove 18 locknuts (5), 12 washers (6), and six pins (8) from battery box (7). Discard locknuts.

BATTERY HOLD-DOWN PIN INSTALLATION

If removed, install six pins (8) on battery box (7) with 12 washers (6) and 18 new locknuts (5).

BATTERY INSTALLATION

1. Position four batteries (4) in battery box (7).
2. Install two retaining straps (1) on battery box (7) with six washers (2) and new locknuts (3).
3. Install battery cables (WP 0145 00).

BATTERY REPLACEMENT (HAWKER BATTERY) 0143 01

THIS WORK PACKAGE COVERS

Removal, Installation, Service, Charging

INITIAL SETUP

Maintenance Level

Unit

Tools and Special Tools

Tool kit, general mechanic's (Item 50, WP 0306 00)

Gloves, chemical (Item 13, WP 0306 00)

Goggles, industrial (Item 14, WP 0306 00)

Materials/Parts

Nut, lock (P/N M45913/1-5CBB) (6)

References

TB 9-6140-252-13

Equipment Condition

Battery cables removed (WP 0145 00)

REMOVAL

1. Remove three locknuts (9), three washers (10), cable bracket (15) and hold down bracket (14) from threaded studs (11).
2. Lift batteries (12 and 13) from battery compartment.
3. Remove three locknuts (2), three washers (3), two cable brackets (1 and 8) and hold down bracket (7) from threaded studs (4).
4. Slide batteries (5 and 6) towards outer edge of battery compartment.
5. Lift batteries (5 and 6) from battery compartment.

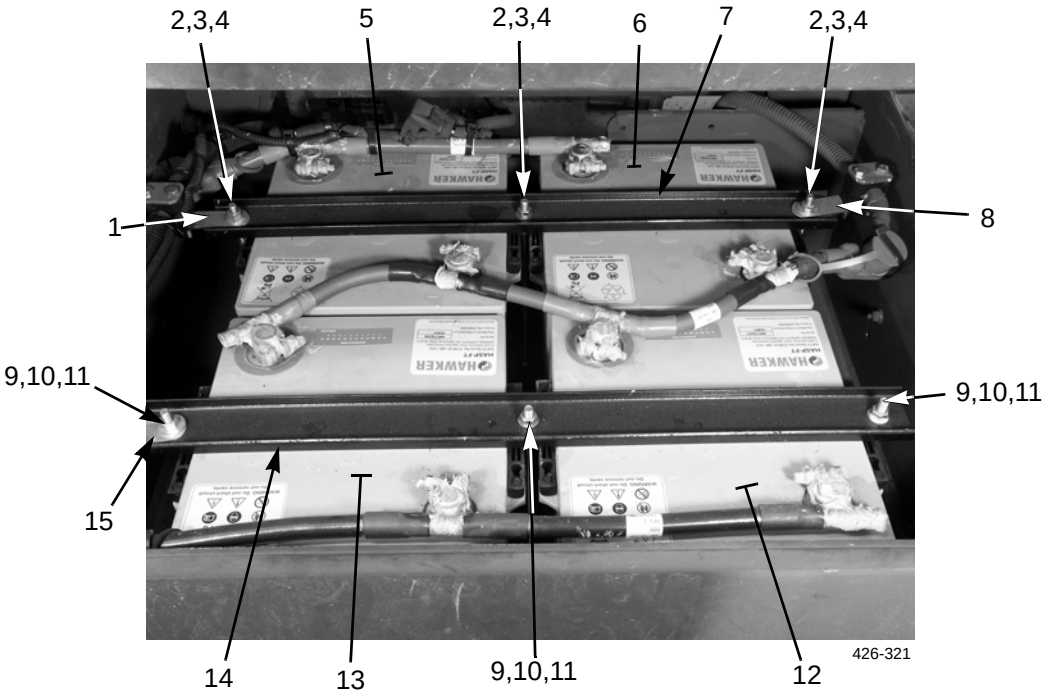

INSTALLATION

1. Place batteries (5 and 6) into battery compartment.
2. Slide batteries (5 and 6) to inner edge of battery compartment.
3. Position hold down bracket (7) over threaded studs (4).
4. Position cable brackets (1 and 8) over threaded studs (4).
5. Install three washers (3) and three locknuts (2).
6. Position remaining two batteries (12 and 13) into battery compartment.
7. Position hold down bracket (14) over threaded studs (11).
8. Position cable bracket (15) over threaded studs (11).
9. Install three washers (10) and three locknuts (9).

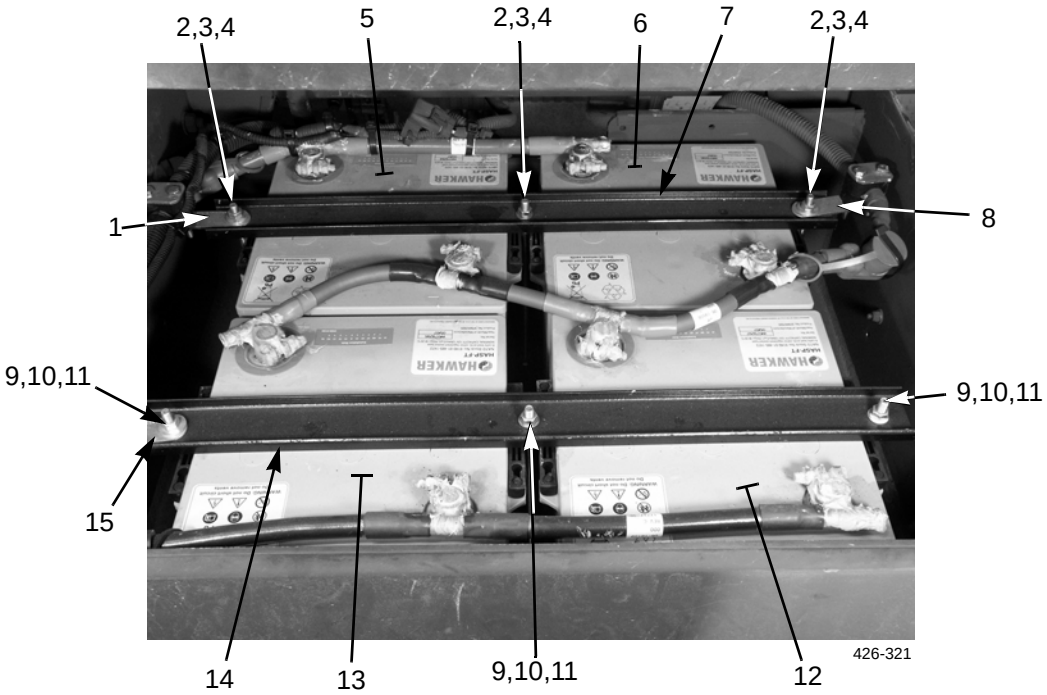

10. Install battery cables (WP 0145 00).

SERVICE

Refer to TB 9-6140-252-13 for servicing of batteries.

CHARGING

Battery's approximate state of charge (SOC) can be determined by measuring its open circuit voltage (OCV). For a rested battery (a battery that has not been charged or discharged for 8 hours) OCV and SOC are related as follows:

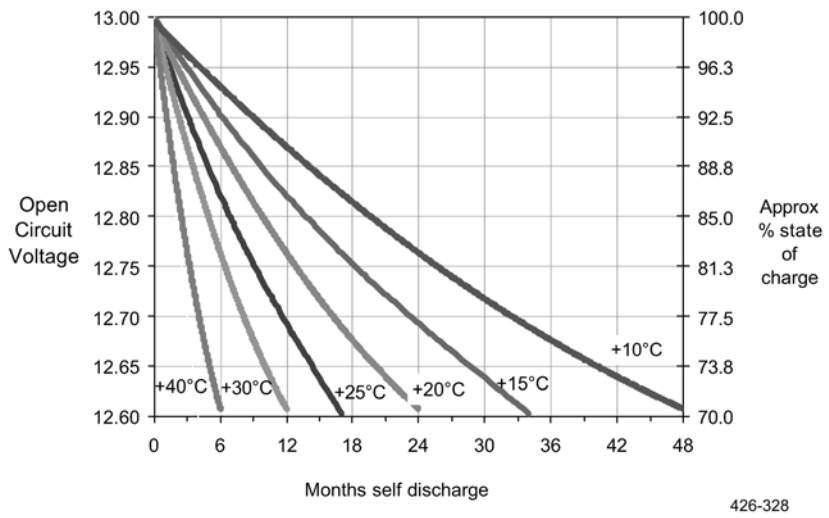

END OF WORK PACKAGE

BATTERY BOX REPLACEMENT 0144 00

THIS WORK PACKAGE COVERS

Removal, Installation

INITIAL SETUP

Tools and Special Tools

Tool kit, general mechanic's (Item 50, WP 0306 00)

Jack, hydraulic, hand (Item 24, WP 0306 00)

Materials/Parts

Nut, kep (P/N 23-10340-125) (2)

Equipment Condition

Batteries and battery hold-down pins removed (WP 0143 00)

Left step removed (WP 0223 00)

NATO slave receptacle removed (WP 0090 00)

Master switch removed (WP 0086 00)

Battery equalizer removed (WP 0071 00)

REMOVAL

NOTE

Perform step 1 at each side of battery box.

1. Remove nut (5), bolt (8), and rubber latch (7) from battery box (1).
2. Remove kep nut (2), washer (3), bolt (6), and bracket (4) from battery box (1).
3. Using suitable jack, support battery box (5).

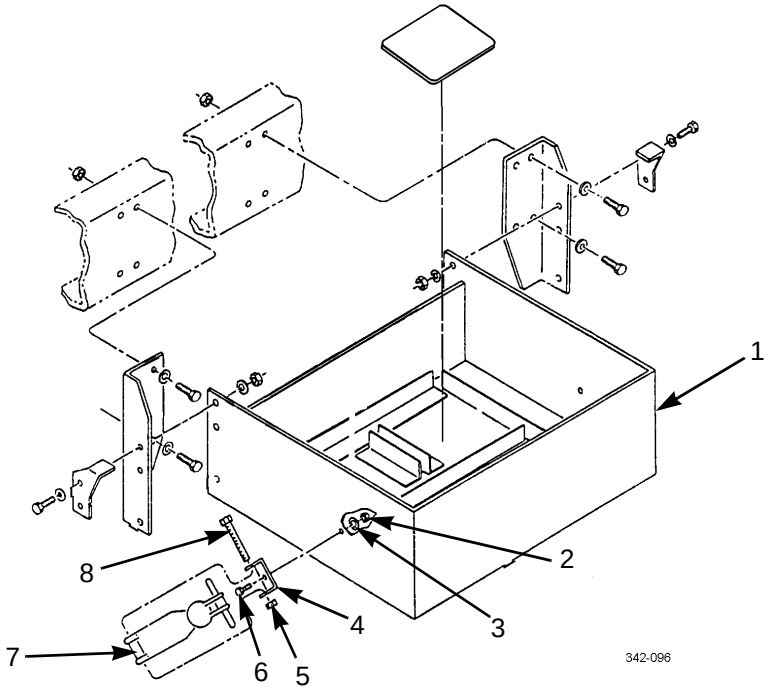

REMOVAL - CONTINUED

NOTE

Perform step 3 at each side of battery box.

4. Remove three nuts (17), six washers (15), three bolts (14), and bracket (13) holding battery box (1) on bracket (11).
5. Remove battery box (1) from vehicle and remove four plywood liners (10).

NOTE

Perform step 6 to remove each of two brackets from vehicle.

6. Remove four nuts (9), washers (12), bolts (16), and bracket (11) from vehicle.

INSTALLATION

NOTE

Perform step 1 to install each of two brackets to vehicle.

1. Install bracket (11) on vehicle with four bolts (16), washers (12), and nuts (9).
2. Install four plywood liners (10) in battery box (1).
3. Using suitable jack, position battery box on two brackets (11).

NOTE

Perform step 4 at each side of battery box.

4. Install battery box (1) and bracket (13) on bracket (11) with three bolts (14), six washers (15), and three nuts (17).
5. Remove jack from battery box (1).

NOTE

Perform step 6 and 7 at each side of battery box.

6. Install bracket (4) with bolt (6), washer (3), and new kep nut (2).
7. Install rubber latch (7) on battery box (1) with bolt (8), and nut (5).
8. Install NATO slave receptacle (WP 0090 00).
9. Install left step (WP 0223 00).
10. Install battery hold-down pins and batteries (WP 0143 00).
11. Install battery equalizer (WP 0071 00).
12. Install master battery switch (WP 0087 00).

INSTALLATION - CONTINUED

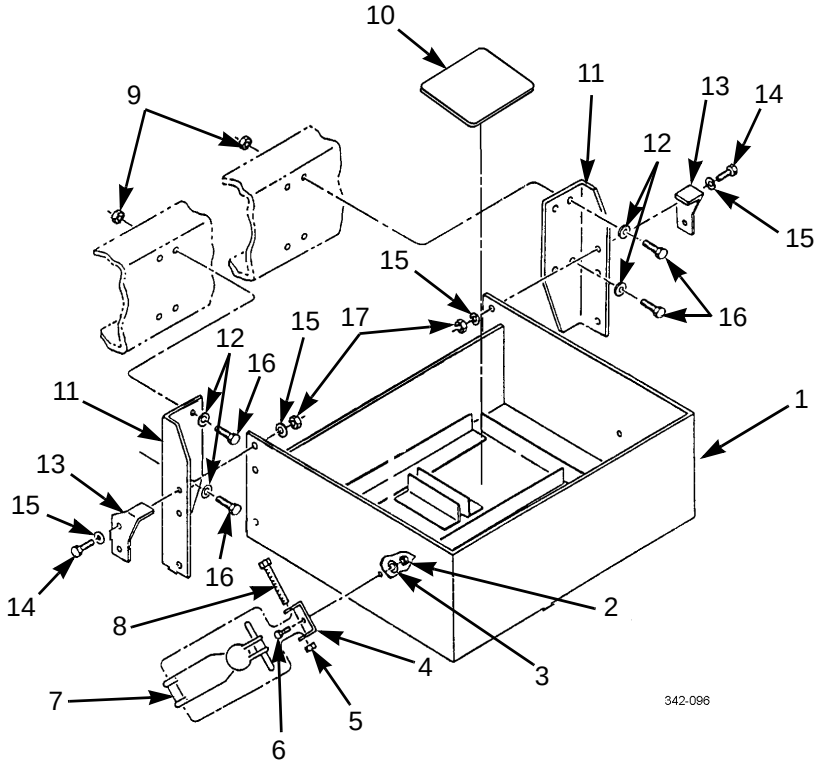

END OF WORK PACKAGE

BATTERY CABLES REPLACEMENT (STANDARD BATTERY) 0145 00

THIS WORK PACKAGE COVERS

Removal, Installation

INITIAL SETUP

Tools and Special Tools

Tool kit, general mechanic's (Item 50, WP 0306 00)

Materials/Parts

Straps, tiedown (Item 33, WP 0305 00)

Tags, marker (Item 34, WP 0305 00)

Tape, insulation, electrical (Item 37, WP 0305 00)

Materials/Parts - Continued

Washer, lock (P/N 23-00702-025) (2)

Washer, lock (P/N MS35338-48) (4)

Equipment Condition

Master battery switch in OFF position (TM 9-2320-302-10)

Battery box cover removed (WP 0144 00)


WARNING

- To avoid eye injury, eye protection is required when working around batteries. DO NOT smoke, use open flame, make sparks or create other ignition sources around batteries. If a battery is giving off gases, it can explode and cause injury to personnel. Remove all jewelry such as rings, ID tags, watches, and bracelets. If jewelry or a tool contacts a battery terminal, a direct short will result in instant heating, injury to personnel, and damage to equipment.
- Sulfuric acid contained in batteries can cause serious burns. Always wear goggles, gloves, and apron. If battery corrosion or electrolyte makes contact with skin, eyes or clothing, take immediate action to stop the corrosive burning effects. Failure to follow these procedures may result in death or serious injury to personnel.

REMOVAL

NOTE

- Perform steps 1 and 2 to safely disconnect battery cables from batteries in order to perform vehicle maintenance.
- Tag cables to aid in installation.
- Remove and discard tiedown straps and tape as necessary.
- Ends of three wires (with built-in fuses) and end of equalizer ground cable may remain in battery box or be removed and set aside as necessary.
- For vehicles without a master battery switch, perform removal steps 1 through 4.

1. Lift cap (5) and remove nut (7), three wires (8), equalizer ground cable (10), and battery cable (9) from negative battery cable (6).
2. Lift cap (1) and remove nut (3) and battery cable (2) from positive battery cable (4).

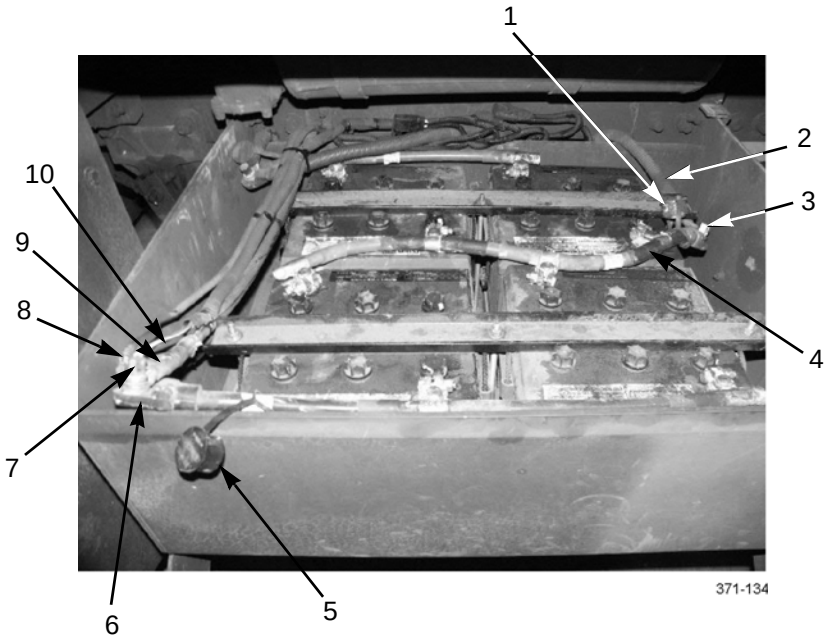

NOTE

Perform steps 3 and 4 to remove three battery cables from top of batteries.

3. Lift cap (12) and remove nut (11), cable (13), and battery cable (14) from positive battery cable (15).
4. Loosen eight nuts (16) and remove three battery cables (4, 6, and 15) from top of batteries.

BATTERY CABLE REPLACEMENT (HAWKER BATTERY) 0146 00

THIS WORK PACKAGE COVERS

Removal, Installation

INITIAL SETUP

Maintenance Level

Unit

Tools and Special Tools

Tool kit, general mechanic's (Item 50, WP 0306 00)

Goggles, industrial (Item 14, WP 0306 00)

Materials/Parts

Grease (Item 20, WP 0312 00)

Materials/Parts - Continued

Strap, tiedown (Item 33, WP 0305 00)

Tags, marker (Item 34, WP 0305 00)

Equipment Condition

Master battery switch in OFF position (TM 9-2320-302-10)

Battery box cover removed (TM 9-2320-302-10)

REMOVAL


WARNING

Disconnect negative battery terminal before connecting or disconnecting any electrical connectors. Failure to do so may result in electrical shock and injury to personnel.

NOTE

Tag all wires and cables prior to removal to aid in installation.

BATTERY CABLE REPLACEMENT (HAWKER BATTERY) - CONTINUED 0146 00

REMOVAL - CONTINUED

1. Remove tiedown straps from battery cable (4).
2. Remove cap (12), nut (10), and two cables (13) from negative battery cable (11).
3. Remove cap (7), nut (8), and two cables (9) from battery cable (6).
4. Remove cap (3), nut (2), two wires (1), and two cables (14) from battery cable (4).
5. Loosen eight nuts (5), and remove negative battery cable (11), and two battery cables (4 and 6).

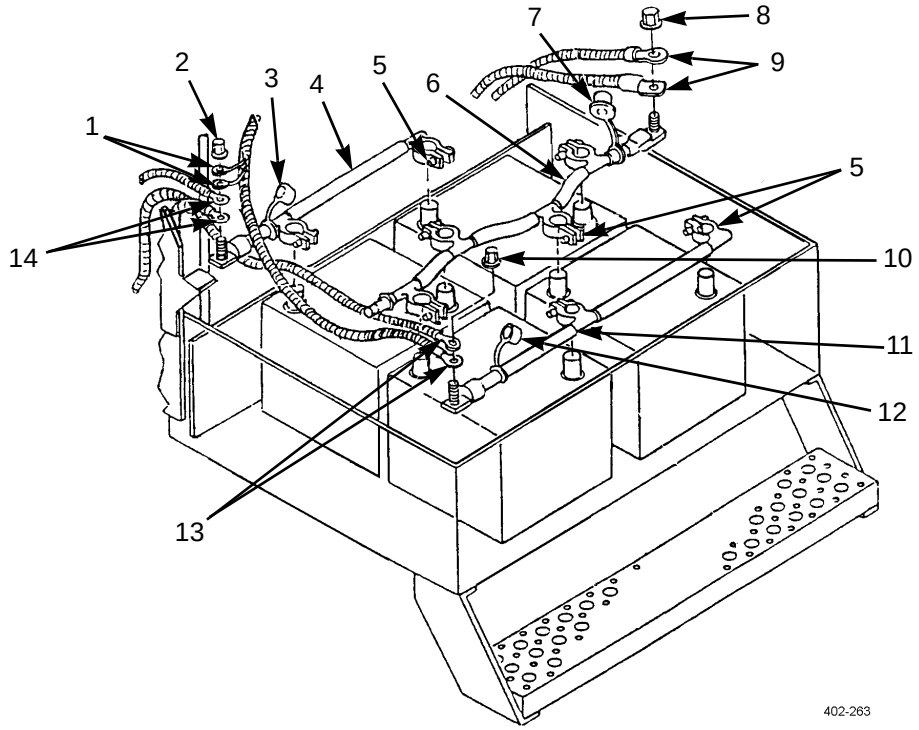

INSTALLATION

1. Install two battery cables (4 and 6) and negative battery cable (11), and tighten eight nuts (5).
2. Install two cables (14), two wires (1), nut (2), and cap (3) to battery cable (4).
3. Install two cables (9), nut (8), and cap (7) to battery cable (6).
4. Install two cables (13), nut (10), and cap (12) to negative battery cable (11).
5. Install battery box cover (TM 9-2320-302-10).
6. Route cables along battery cable (4) and install tiedown straps.
7. Apply a coat of grease to each battery terminal connection.

END OF WORK PACKAGE

STOP/TAIL/BACKUP LIGHTS WIRING HARNESS REPLACEMENT (M915A3 OLD MODEL) 0147 00

THIS WORK PACKAGE COVERS

Removal, Installation

INITIAL SETUP

Tools and Special Tools

Tool kit, general mechanic's (Item 50, WP 0306 00)

Materials/Parts

Straps, tiedown (Item 33, WP 0305 00)

Equipment Condition

Master battery switch in OFF position (TM 9-2320-302-10)

REMOVAL

1. Disconnect stop/tail/backup lights wiring harness connectors (2) from taillights (1).

NOTE

Wiring harness is secured in place with tiedown straps.

2. Remove tiedown straps. Discard tiedown straps.
3. Remove stop/tail/backup lights wiring harness (3) from vehicle.

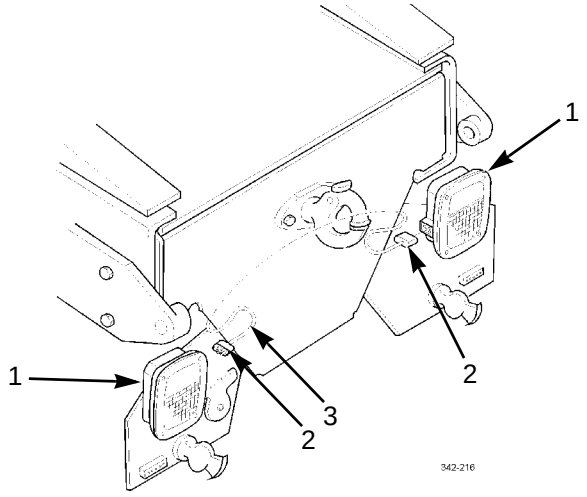

INSTALLATION

1. Connect stop/tail/backup lights wiring harness connectors (2) to taillights (1).

NOTE

Install new wire tiedown straps, as necessary, to secure wiring harness.

2. Position stop/tail/backup lights wiring harness (3) on vehicle and secure with new tiedown straps.

END OF WORK PACKAGE

STOP/TAIL/BACKUP LIGHTS WIRING HARNESS REPLACEMENT (M915A3 NEW MODEL, M916A3, M917A2) 0148 00

THIS WORK PACKAGE COVERS

Removal, Installation

INITIAL SETUP

Tools and Special Tools

Tool kit, general mechanic's (Item 50, WP 0306 00)

Materials/Parts

Straps, tiedown (Item 33, WP 0305 00)

Tags, marker (Item 34, WP 0305 00)

Equipment Condition

Master battery switch in OFF position (TM 9-2320-302-10)

REMOVAL

NOTE

- Note position of tie-down straps, then cut tiedown straps and discard.
- Tag connectors to ensure correct installation.

1. At each taillight, disconnect five taillight connectors (1) from wiring harness connectors (2).

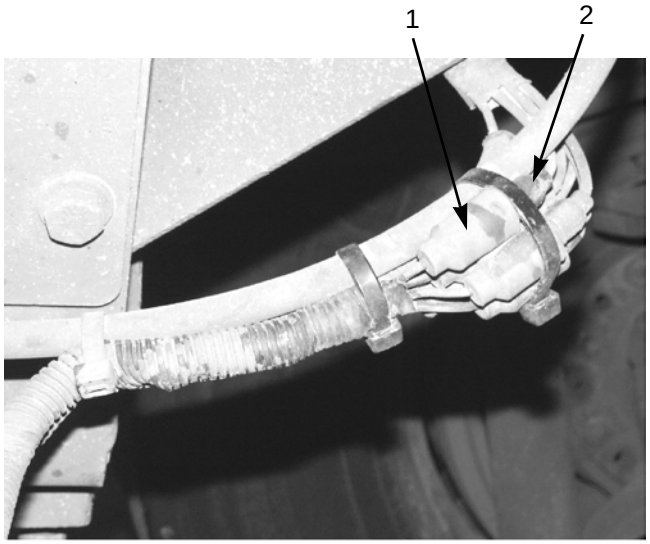

371-093

REMOVAL - CONTINUED

2. At each backup light, disconnect wiring harness connector (3) from rear of backup light (4).

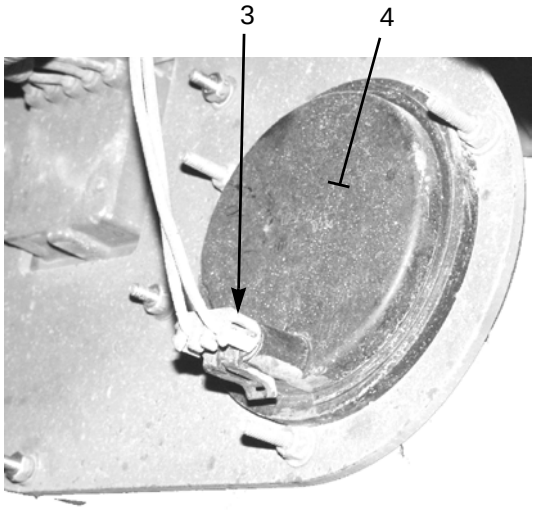

371-098

3. Disconnect two wiring harness connectors (6) from chassis wiring harness connectors (5).
4. Remove two nuts (10) and washers (11) and release taillight/backup light wiring harness (7) from two clamps (9). Remove harness from rear of vehicle.

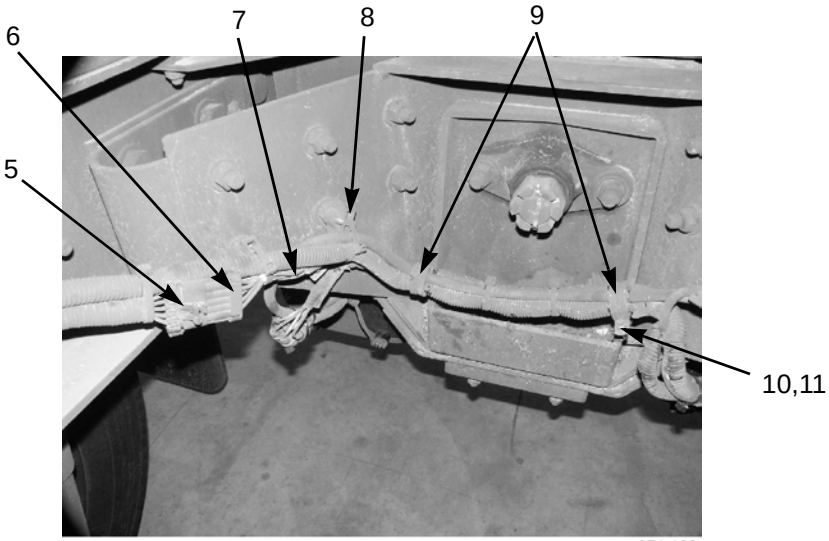

371-106

INSTALLATION

NOTE

Ensure that wire loom is installed around taillight/backup light wiring harness.

INSTALLATION - CONTINUED

1. Position taillight/backup light wiring harness (7) between points of connection. Connect two wiring harness connectors (6) to chassis wiring harness connectors (5).
2. At each backup light, connect wiring harness connector (3) to rear of backup light (4).
3. At each taillight, connect five taillight connectors (1) to wiring harness connectors (2).

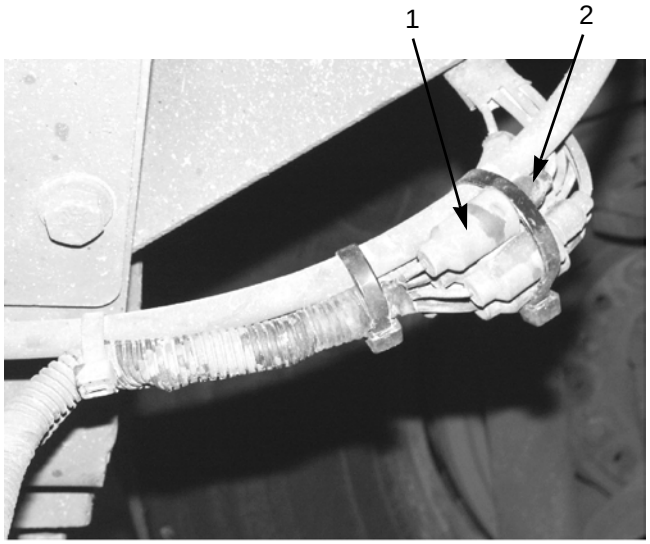

371-093

4. Secure taillight/backup light harness (7) with two clamps (9), washers (11), and nuts (10).
5. Secure taillight/backup light wiring harness (7) with new tiedown straps around harness, air tubes, and through cable tie mounts (8).

END OF WORK PACKAGE

AUTOMATIC ETHER STARTING AID WIRING HARNESSES AND FUSE REPLACEMENT 0149 00

THIS WORK PACKAGE COVERS

Main Wiring Harness and Fuse Removal, Jumper Wiring Harness Removal, Main Wiring Harness and Fuse Installation, Jumper Wiring Harness Installation

INITIAL SETUP

Tools and Special Tools

Tool kit, general mechanic's (Item 50, WP 0306 00)

Materials/Parts

Straps, tiedown (Item 33, WP 0305 00)

Tags, marker (Item 34, WP 0305 00)

Equipment Condition

Master battery switch in OFF position (TM 9-2320-302-10)

NOTE

Tag wires and connectors to aid in installation.

MAIN WIRING HARNESS AND FUSE REMOVAL

NOTE

Remove tiedown straps, as necessary, and discard.

1. Disconnect connector (2) of main harness (1) from ether control relay harness connector (3).
2. Disconnect main harness connector (5) from valve harness connector (4).

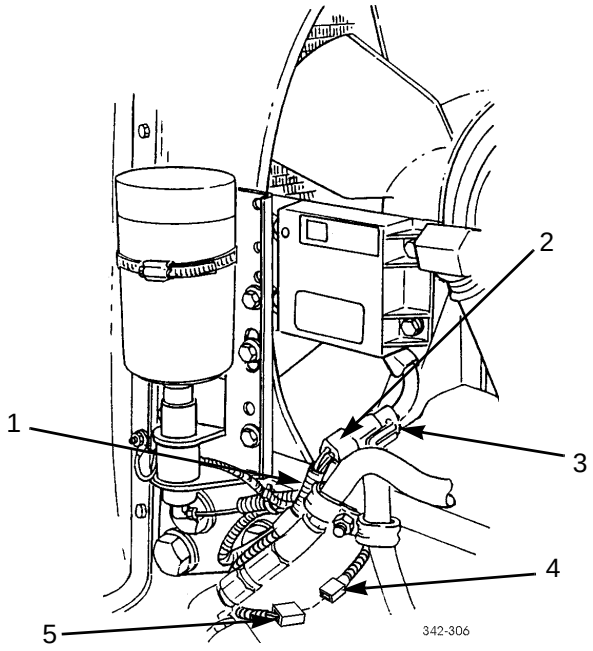

MAIN WIRING HARNESS AND FUSE REMOVAL - CONTINUED

3. Remove screw (7) and terminal (6) of main harness (1) from side of engine.
4. Remove nut (8) and terminal (9) of main harness (1) from starter.
5. Disconnect main harness connector (16) from jumper harness connector (15).
6. Remove main harness (1) from vehicle.
7. Disconnect connector of main harness (1) and remove fuse (17).

JUMPER WIRING HARNESS REMOVAL

1. Disconnect jumper harness connector (15) from main harness connector (16).
2. Disconnect jumper harness connector (13) from ECU connector (14).
3. Disconnect jumper harness connector (11) from ECU harness connector (10).
4. Remove jumper harness (12) from vehicle.

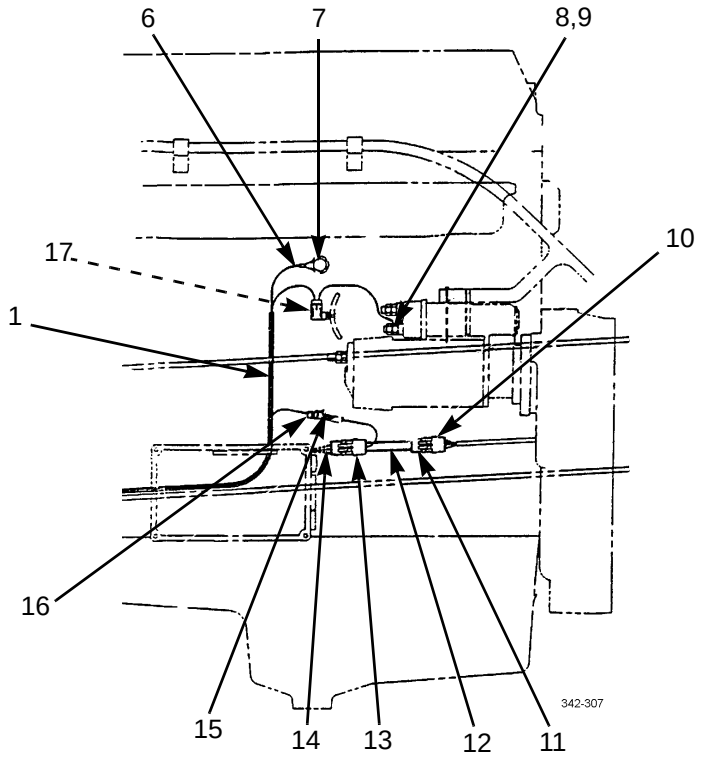

MAIN WIRING HARNESS AND FUSE INSTALLATION

1. Install fuse (17) and connect connector of main harness (1).
2. Position main harness (1) on vehicle.
3. Connect main harness connector (16) to jumper harness connector (15).
4. Install terminal (9) of main harness (1) to starter with nut (8).
5. Install terminal (6) of main harness (1) to side of engine with screw (7).
6. Connect main harness connector (5) to valve harness connector (4).

MAIN WIRING HARNESS AND FUSE INSTALLATION - CONTINUED

7. Connect connector (2) of main harness (1) to ether control relay harness connector (3).
8. Install new tiedown straps, as necessary.

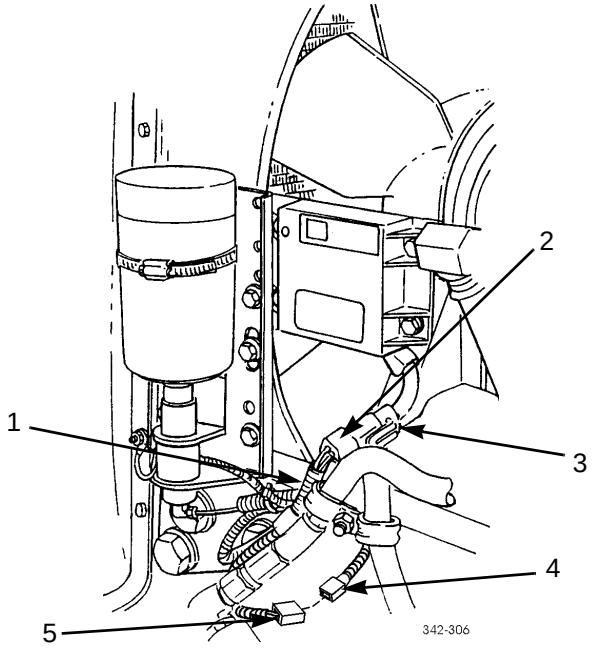

JUMPER WIRING HARNESS INSTALLATION

1. Position jumper harness (12) on vehicle.
2. Connect jumper harness connector (11) to ECU harness connector (10).
3. Connect jumper harness connector (13) to ECU connector (14).
4. Connect jumper harness connector (15) to main harness connector (16).

END OF WORK PACKAGE

CAB-TO-FRAME GROUND WIRE REPLACEMENT 0150 00

THIS WORK PACKAGE COVERS

Removal, Installation

INITIAL SETUP

Tools and Special Tools

Tool kit, general mechanic's (Item 50, WP 0306 00)

Equipment Condition

Master battery switch in OFF position (TM 9-2320-302-10)

REMOVAL

1. At left-front of cab (4), remove nut (11), two washers (12), screw (13), and loop clamp (10) from cab-to-frame ground wire (5).
2. Remove nut (1), washer (2), and screw (3) holding cab-to frame ground wire (5) to cab (4).
3. Remove nut (6), two washers (7), screw (8), and cab-to-frame ground wire (5) from frame (9).

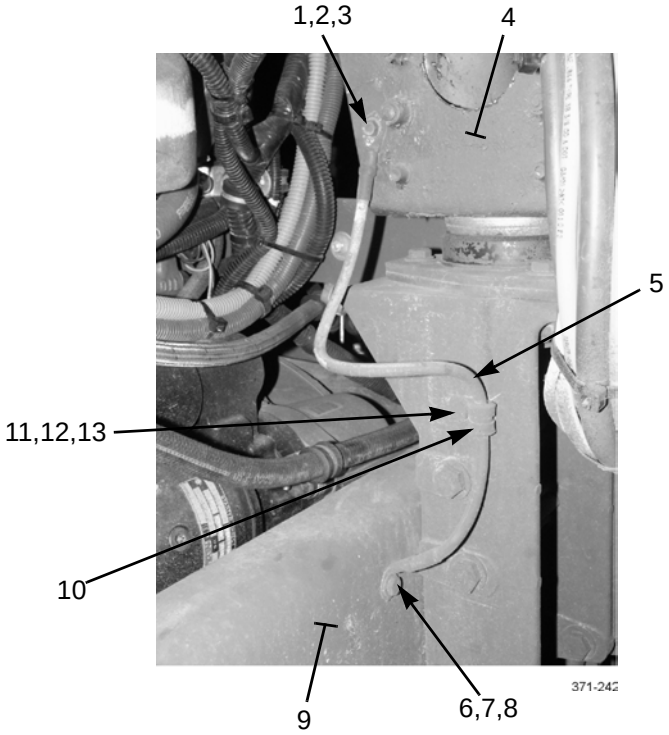

INSTALLATION

1. Install cab-to-frame ground wire (5) to frame (9) with screw (8), two washers (7) and nut (6).
2. Install cab-to-frame ground wire (5) to cab (4) with screw (3), washer (2) and nut (1).
3. Install loop clamp (10) to cab-to-frame ground wire (5) with screw (13), two washers (12), and nut (11).

END OF WORK PACKAGE

ELECTRICAL CONNECTORS MAINTENANCE 0151 00

THIS WORK PACKAGE COVERS

Standard Military Connector Repair, Commercial Connector Repair, Splicing

INITIAL SETUP‘

Tools and Special Tools

Tool kit, general mechanic’s (Item 50, WP 0306 00)

Gun, heat (Item 17, WP 0306 00)

Harness, wiring (Item 16, WP 0306 00)

Soldering gun (Item 41, WP 0306 00)

Tool kit, electrical connector repair (Item 49, WP 0306 00)

Stripper, wire, hand (Item 44, WP 0306 00)

Materials/Parts

Flux, soldering (Item 15, WP 0305 00)

Solder (Item 32, WP 0305 00)

Tags, marker (Item 34, WP 0305 00)

Equipment Condition

Master battery switch in OFF position (TM 9-2320-302-10)

References

TB SIG 222

NOTE

Tag cables and wires to aid in installation.

STANDARD MILITARY CONNECTOR REPAIR

1. **Panel Mounting Receptacle Disassembly.**
   a. Unscrew nut (2) from shell (6) assembly and slide back on cable leads (1).
   b. Push grommet (3) back on cable leads (1).
   c. Drive contacts (4) out through rear of insert (5) with pin extractor.
   d. Push insert (5) out through rear of shell (6).
   e. Unsolder cable leads (1) from contacts (4).

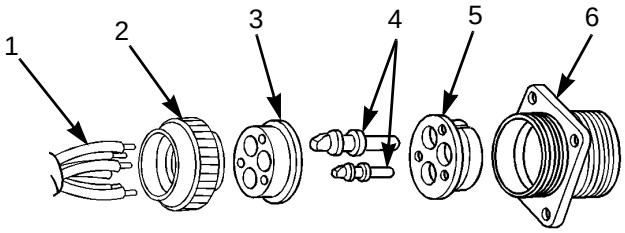

342-494

2. **Panel Mounting Receptacle Assembly.**
   a. Strip cable insulation equal to depth of solder wells of contacts (4).
   b. Slide nut (2) over cable leads (1).
   c. Slide grommet (3) over cable leads (1).
   d. Insert cable leads (1) into solder wells of contacts (4) and solder.
   e. Push insert (5) into shell (6) from rear until seated. Groove in insert must be aligned with guide in shell to ensure proper fit.

STANDARD MILITARY CONNECTOR REPAIR - CONTINUED

f. Push contacts (4) into insert (5) from rear until seated.

g. Push grommet (3) down cable leads (1) and over solder wells of contacts (4).

h. Screw nut (2) onto shell (6) assembly.

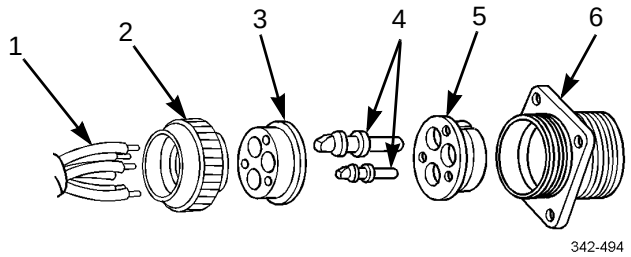

3. **Plug Disassembly.**

a. Unscrew nut (8) from shell (13) assembly and slide back on cable leads (7).

b. Push grommet (9) back on cable leads (7).

c. Slide coupling nut (10) off shell (13) assembly.

d. Drive contacts (11) out through rear of insert (12) with pin extractor.

e. Push insert (12) out through rear of shell (13).

f. Unsolder cable leads (7) from contacts (11).

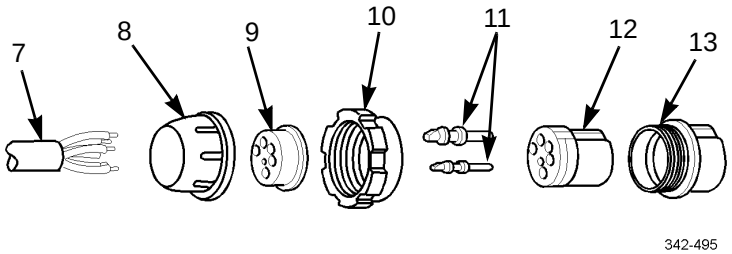

4. **Plug Assembly.**

a. Strip cable insulation equal to depth of solder wells of contacts (11).

b. Slide nut (8) over cable leads (7).

c. Slide grommet (9) over cable leads (7).

d. Insert cable leads (7) into solder wells of contacts (11) and solder.

e. Push insert (12) into shell (13) from rear until seated. Groove in insert must be aligned with guide in shell to ensure proper fit.

f. Push contacts (11) into insert (12) from rear until seated.

g. Slide coupling nut (10) onto shell (13) assembly.

h. Push grommet (9) down cable leads (7) and over solder wells of contacts (11).

i. Screw nut (8) onto shell (13) assembly.

STANDARD MILITARY CONNECTOR REPAIR - CONTINUED

NOTE

The following procedures cover assembly of new terminals and connectors. Prepare cable by cutting off damaged or defective terminal or connector.

5. **Terminal-type Cable Connector.**
   a. Strip cable (14) insulation equal to depth of terminal (16) well.
   b. Slide insulation (15) over cable (14).
   c. Insert cable (14) into terminal (16) well and crimp.
   d. Slide insulation (15) over crimped end of terminal (16).

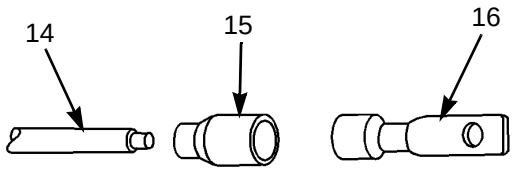

342-496

6. **Male Cable Connector With C-washer.**
   a. Strip cable (17) insulation equal to depth of terminal (20) well.
   b. Slide shell (18) over cable (17).
   c. Insert cable (17) into terminal (20) well and crimp.
   d. Place C-washer (19) over cable (17) at crimped junction and slide shell (18) over C-washer and terminal (20).

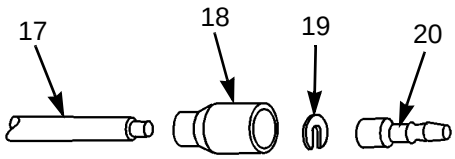

342-497

STANDARD MILITARY CONNECTOR REPAIR - CONTINUED

7. **Female Cable Connector With Washer.**
   a. Strip cable (21) insulation approximately 1/8 in (3.2 mm).
   b. Slide shell (22) and washer (23) over cable (21).
   c. Place cable (21) in cylindrical end of terminal (24) and crimp.
   d. Slide shell (22) and washer (23) over terminal (24).

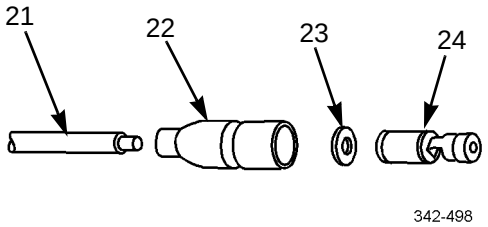

8. **Female Cable Connector With Sleeve.**
   a. Strip cable (25) insulation approximately 1/8 in (3.2 mm).
   b. Slide shell (26) and sleeve (27) over cable (25).
   c. Place cable (25) in cylindrical end of terminal (28) and crimp.
   d. Slide shell (26) and sleeve (27) over terminal (28).

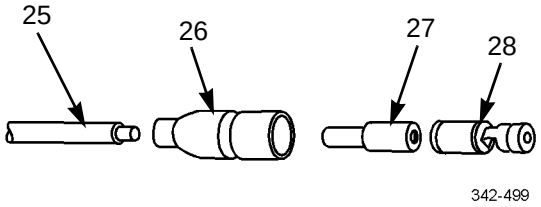

9. **Sealed Connector.**
   a. Strip cable (29) insulation approximately 1/8 in (3.2 mm).
   b. Slide seal (30) onto cable (29).
   c. Crimp terminal (31) onto cable (29).
   d. Insert terminal (31) into connector (32) and close lock.

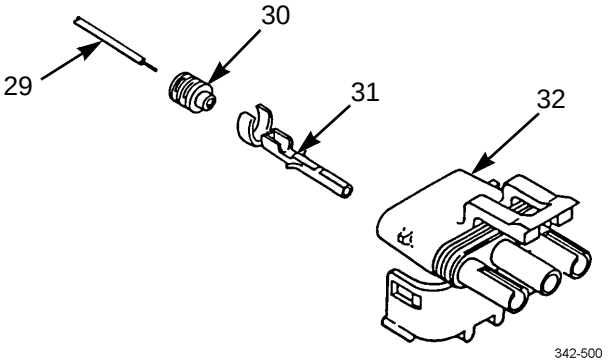

STANDARD MILITARY CONNECTOR REPAIR - CONTINUED

10. **Panel Connector.**

    a. Strip cable (33) insulation.

    b. Crimp terminal (34) onto cable (33).

    c. Insert terminal (34) into connector (35).

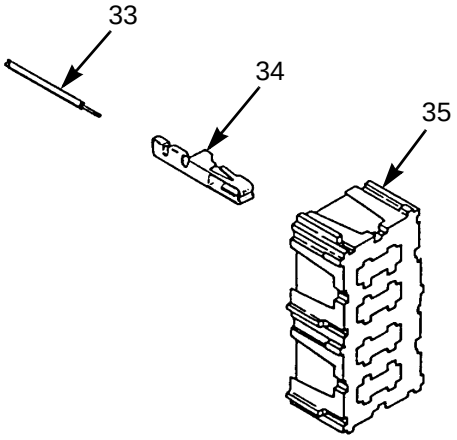

342-501

11. **Harness Connector.**

    a. Strip cable (36) insulation.

    b. Crimp terminal (37) onto cable (36).

    c. Insert terminal (37) into connector (39).

    d. Install lock (38) in connector (39).

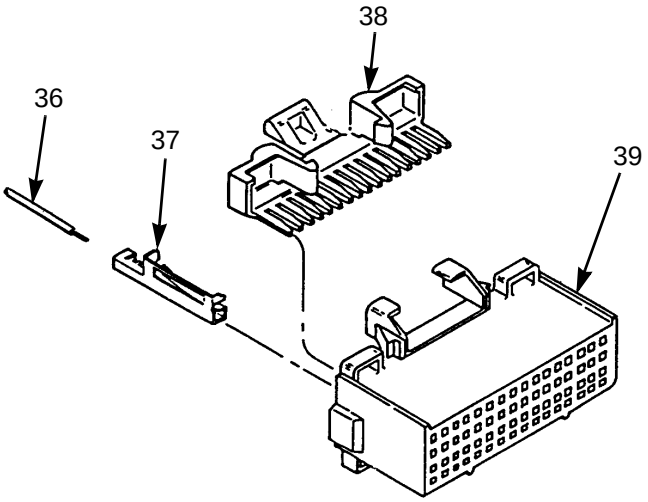

342-502

COMMERCIAL CONNECTOR REPAIR

1. **Crimp and Removal Tools.** Crimp tools and connector removal tools can be purchased from Kent-Moore. Tools and associated part numbers are listed in Table 1.

Table 1. Crimp and Removal Tools.

CONNECTOR	TOOL	PART NUMBER
Metri-Pack 150	Removing	J35689
	Crimp	J35123
Weather Pack	Removing	J36400-5
	Crimp	J35606
Metri-Pack 280	Removing (18 AWG)	J33095
	Crimp (18 AWG)	J38125-6
	Removing (12 AWG - Used for power harness)	J33095
	Crimp (12 AWG - Used for power harness)	J39848
Deutsch	Removing (12 AWG)	J37451
	Removing (16-18 AWG)	J34513
	Crimp	J34182

2. **Metri-Pack 150 Connectors.**

   a. Connector Part Numbers.

   (1) Metri-Pack 150 series connectors are “pull-to-seat” connectors. Each wire must be pushed through the connector prior to crimping the terminal. Cable seals are inserted into the shell of the connector and hold many wires.

   (2) Metri-Pack 150 connectors are listed in Table 2.

COMMERCIAL CONNECTOR REPAIR - CONTINUED

Table 2. Metri-Pack 150 Connector Part Numbers.

ECM ENGINE HARNESS		**ECM VEHICLE INTERFACE HARNESS**	
Connector	P/N: 12034400	Connector	P/N: 12034398
Terminal	P/N: 12103881	Terminal	P/N: 12103881
Seal	In Connector	Seal	In Connector
Plug	P/N: 12034413	Plug	P/N: 12034413
ECM COMMUNICATION HARNESS CONNECTOR		**TEMPERATURE SENSOR HARNESS**	
Connector	P/N: 12066317	Connector	P/N: 12162193
Terminal	P/N: 12103881	Terminal	P/N: 12103881
Seal	In Connector	Seal	In Connector
Plug	P/N: 12034413	Plug	P/N: Not Applicable
PRESSURE SENSOR HARNESS		**FIRE TRUCK PRESSURE SENSOR (PGS)**	
Connector	P/N: 12047909	Connector	P/N: 12065287
Terminal	P/N: 12103881	Terminal	P/N: 12103881
Seal	In Connector	Seal	In Connector
Plug	P/N: Not Applicable	Plug	P/N: Not Applicable
SRS HARNESS		**TRS HARNESS**	
Connector	P/N: 12162193	Connector	P/N: 12162197
Terminal	P/N: 12103881	Terminal	P/N: 12103881
Seal	In Connector	Seal	In Connector
Plug	P/N: Not Applicable	Plug	P/N: Not Applicable
INJECTOR (GRAY)		**INJECTOR (BLACK)**	
Connector	P/N: 12162830	Connector	P/N: 12040947
Terminal	P/N: 12103881	Terminal	P/N: 12103881
Seal	P/N: Not Applicable	Seal	P/N: Not Applicable
Plug	P/N: 12034413	Plug	P/N: 12034413

COMMERCIAL CONNECTOR REPAIR - CONTINUED

b. **Installation.** Metri-Pack 150 connectors are “pull-to-seat” design. The cable is pushed through seal and correct cavity of connector before crimping terminal to cable. It should be stripped of insulation AFTER it is placed through seal and connector body. Use the following instructions for terminal installation:

(1) Position cable through seal and correct cavity of connector (Figure 1).

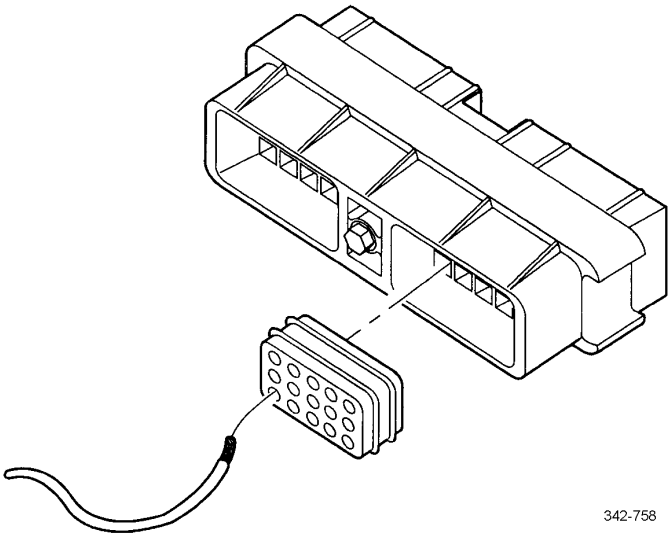

Figure 1. Inserting Wire in Connector.

(2) Strip end of cable using wire strippers to leave 0.2 +/- 0.02 in (5.0 +/- 0.5 mm) of bare conductor.

(3) Squeeze handles of crimping tool together firmly to cause jaws to automatically open.

(4) Hold “wire side” facing you.

(5) Push terminal holder to open position and insert terminal until wire attaching portion of terminal rests on 20-22 anvil. Be sure wire core wings and insulation wings of terminal are pointing toward upper jaw of crimping tool (Figure 2).

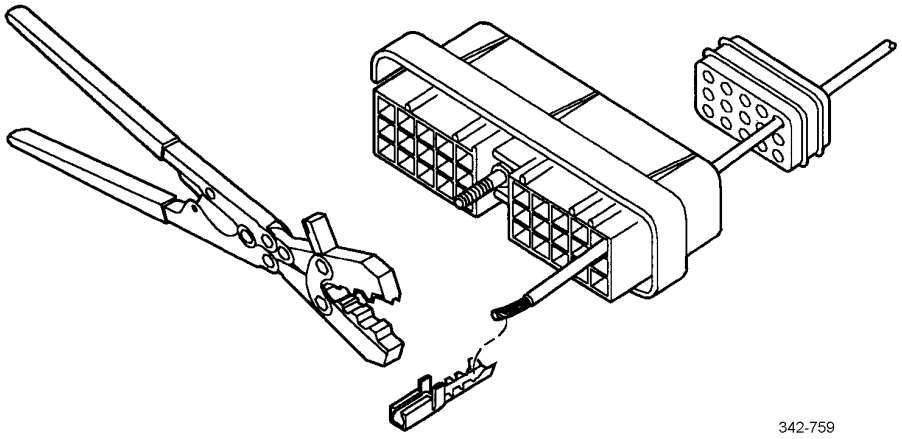

Figure 2. Terminal and Crimping Tool Position.

COMMERCIAL CONNECTOR REPAIR - CONTINUED

(6) Insert cable into terminal until stripped portion is positioned in wire core wings and insulation portion ends just forward of insulation wings (Figure 3).

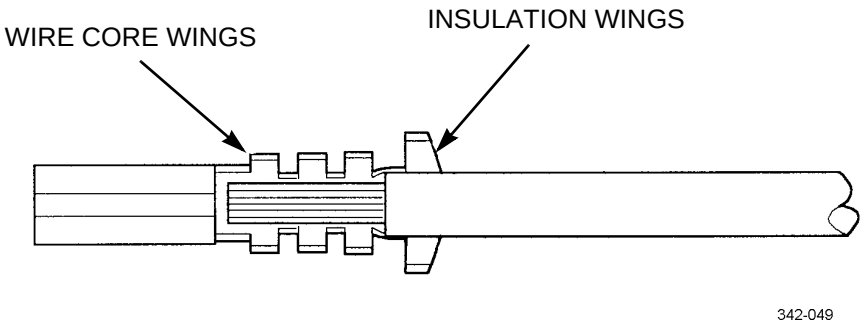

Figure 3. Cable to Terminal Alignment.

(7) Compress handles of crimping tool until ratchet automatically releases and crimp is complete.

NOTE

For faster, more efficient crimping operation, a bracket or bench rest may be used to cradle one handle of tool. Operator can apply terminals by grasping and actuating only one handle of tool (Figure 4).

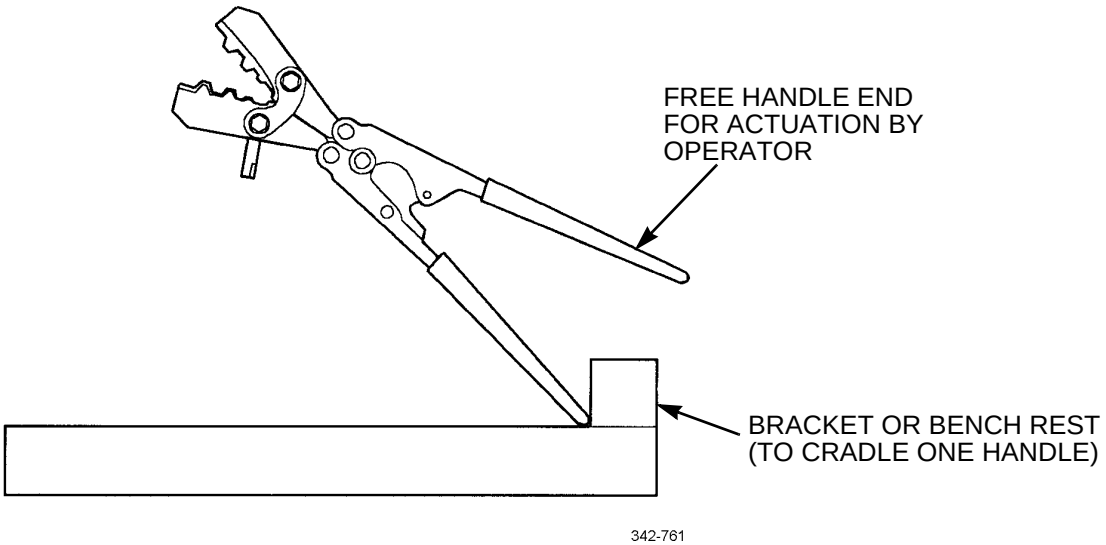

Figure 4. Crimping Operation.

COMMERCIAL CONNECTOR REPAIR - CONTINUED

(8) Release crimping tool with lock lever located between handles, in case of jamming.

NOTE

For ECM 30-pin connectors, put locking tang opposite lettered side.

(9) Align locking tang of terminal with lettered side of connector.

(10) Pull cable back through connector until a click is heard (Figure 5). Position seal into connector.

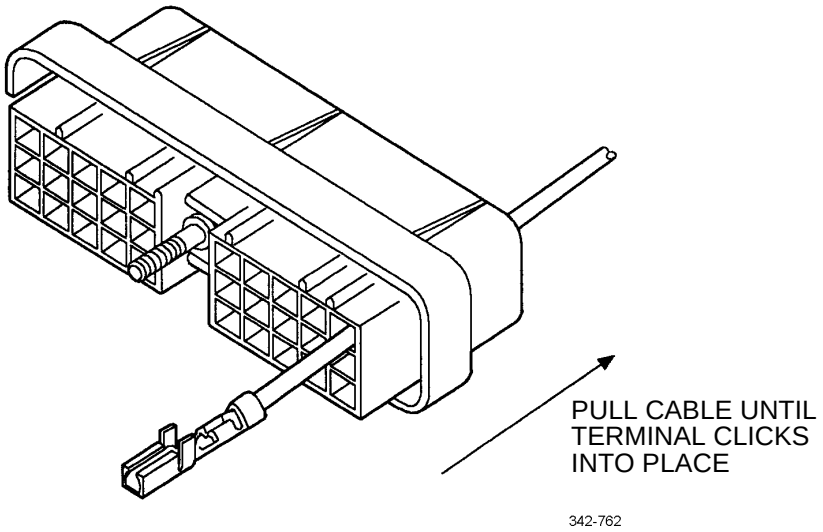

Figure 5. Pulling Terminal to Seat.

c. **Removal and Repair.** A tang on terminal locks into a tab molded into plastic connector to retain cable assembly. Remove Metri-Pack 150 terminals using the following instructions:

(1) Insert removal tool into cavity of connector, placing tip of tool between locking tang of terminal and wall of cavity (Figure 6).

COMMERCIAL CONNECTOR REPAIR - CONTINUED

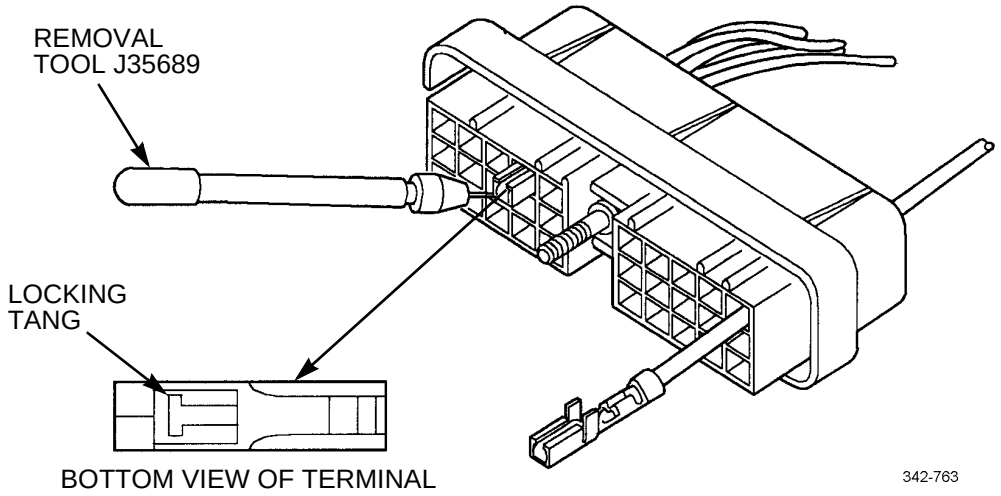

Figure 6. Terminal Removal.

(2) Depress locking tang of terminal to release from connector.

(3) Push cable forward through terminal until complete crimp is exposed.

(4) Cut cable immediately behind damaged terminal to repair.

(5) Follow installation instructions for crimping terminal and inserting into connector.

3. **Weather Pack and Metri-Pack 280 Connectors.**

a. **Connector Part Numbers.**

(1) Weather Pack and Metri-Pack 280 series connectors are “push-to-seat design”. The terminal is crimped onto each wire before it is inserted into the connector. A cable seal is crimped on each wire at the same time the terminal is crimped onto the wire. Weather Pack connectors use a secondary lock on both male and female connector bodies and the lock snaps into place over the cable seals after installation. Some Metri-Pack connectors have secondary locks as well.

(2) Weather Pack connectors and their associated part numbers are listed in Table 3.

(3) Metri-Pack 280 connectors and their associated part numbers are listed in Table 4.

COMMERCIAL CONNECTOR REPAIR - CONTINUED

Table 3. Weather Pack Connectors and Part Numbers.

TURBO BOOST PRESSURE SENSOR HARNESS		**ENGINE BRAKE CONNECTOR, SERIES 60**	
Connector	P/N: 12015384	Connector	P/N: 12010973/12162000
Terminal	P/N: 12089040	Terminal	P/N: 12048074/12045773
Seal	P/N: 12015323		
THROTTLE POSITION SENSOR - HARNESS SIDE		**THROTTLE POSITION SENSOR - SENSOR SIDE**	
Connector	P/N: 12015793	Connector	P/N: 12010717
Terminal	P/N: 12089188	Terminal	P/N: 12089040
Seal	P/N: 12015323	Seal	P/N: 12015323
Plug	P/N: Not Applicable	Plug	P/N: Not Applicable
IGNITION CONNECTOR POWER HARNESS SIDE		**IGNITION CONNECTOR VEHICLE INTERFACE HARNESS SIDE**	
Connector	P/N: 12034074	Connector	P/N: 12015378
Terminal	P/N: 12089040	Terminal	P/N: 12089188
ALLISON INTERFACE MODULE		**ALLISON INTERFACE MODULE MAXIMUM FEATURE**	
Connector	P/N: 12015791	Connector	P/N: 12015799
Terminal	P/N: 12089188	Terminal	P/N: 12089188
Seal	P/N: 12015323	Seal	P/N: 12015323
		Plug	P/N: 12010300

Table 4. Metri-Pack 280 Connectors and Part Numbers.

COOLANT LEVEL SENSOR CONNECTOR		**POWER HARNESS**	
Connector	P/N: 15300027	Connector	P/N: 12124634
Terminal	P/N: 12077411	Terminal	P/N: 12077413
Seal	P/N: 12015323	Seal	P/N: 12015193
Secondary Lock	P/N: 15300014	Secondary Lock	P/N: 12052816
Plug	P/N: Not Applicable	Plug	P/N: Not Applicable

COMMERCIAL CONNECTOR REPAIR - CONTINUED

b. **Installation.** Use the following instructions for terminal installation:

(1) Insert terminal into locating hole of crimping tool using proper hole according to gage of cable to be used (Figure 7).

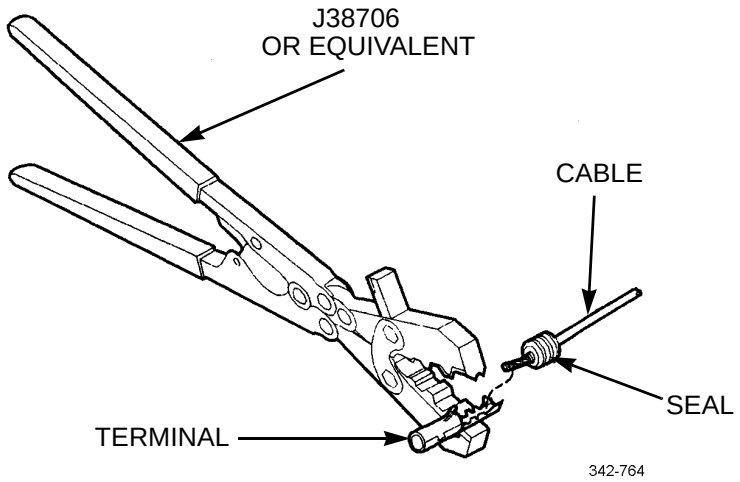

Figure 7. Terminal Position.

(2) Insert cable into terminal until stripped position is positioned in cable core wings, and seal and insulated portion of cable are in insulation wings (Figure 8).

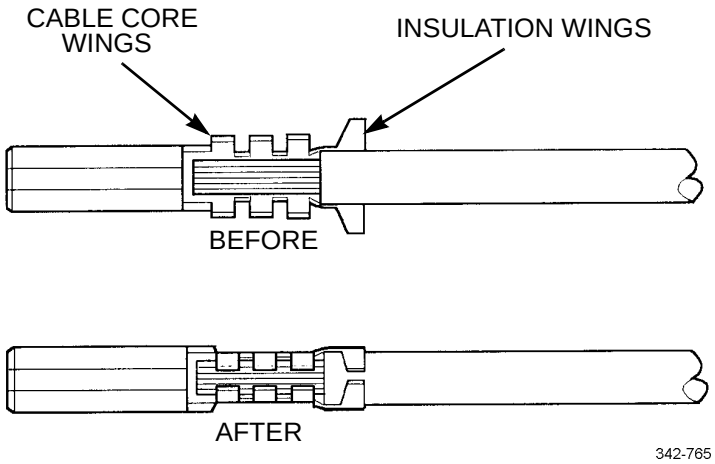

Figure 8. Cable and Terminal Position Before and After Crimping.

COMMERCIAL CONNECTOR REPAIR - CONTINUED

(3) Compress handles of crimping tool until ratchet automatically releases and crimp is complete. A properly crimped terminal is shown (Figure 8).

(4) Release crimping tool with lock lever located between handles, in case of jamming.

(5) Push crimped terminal into connector until it clicks into place. Gently tug on cable to make sure it is secure (Figure 9).

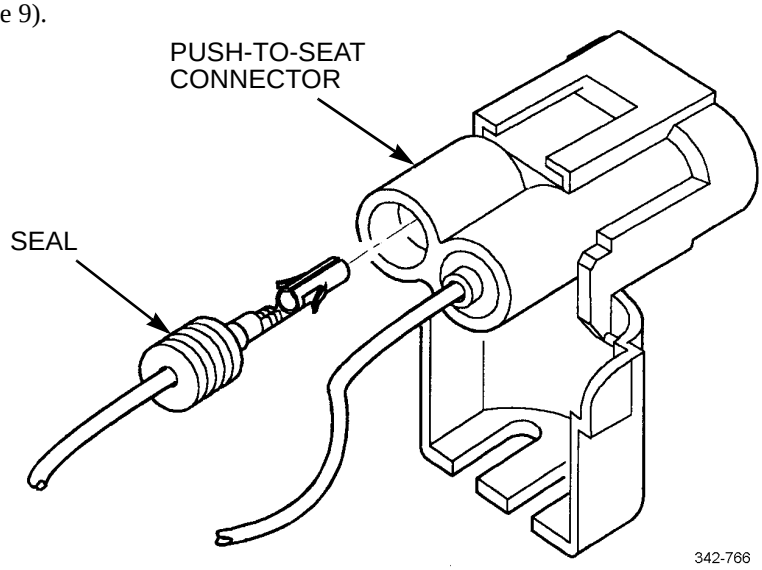

Figure 9. Inserting Terminal in Connector.

c. **Removal and Repair.** Two locking tangs are used on terminals to secure them to the connector body. Use the following instructions for removing terminals from connector body:

(1) Disengage locking tang securing connector bodies to each other. Grasp one half of connector in each hand and gently pull apart.

(2) Unlatch and open secondary lock on connector (Figure 10).

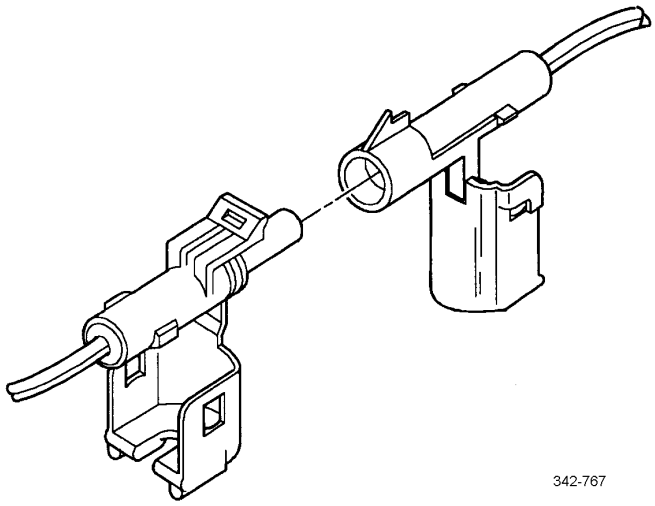

Figure 10. Unlatched Secondary Lock.

COMMERCIAL CONNECTOR REPAIR - CONTINUED

(3) Grasp cable to be removed and push terminal to forward position.

(4) Insert removal tool straight into front of connector cavity until it rests on cavity shoulder.

(5) Grasp cable and push forward through connector cavity into tool while holding tool securely in place (Figure 11).

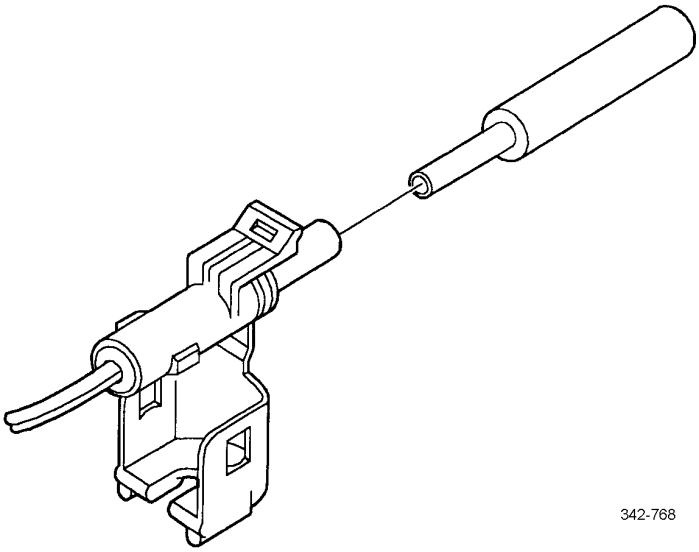

Figure 11. Removal Tool Procedure.

(6) Tool will press locking tangs of terminal. Pull cable rearward (back through connector). Remove tool from connector cavity.

(7) Cut wire immediately behind cable seat and slip new cable seal onto wire.

(8) Strip end of cable using strippers to leave 0.2 +/- 0.02 in (5.0 +/- 0.5 mm) of bare conductor. Position cable seal as shown (Figure 12).

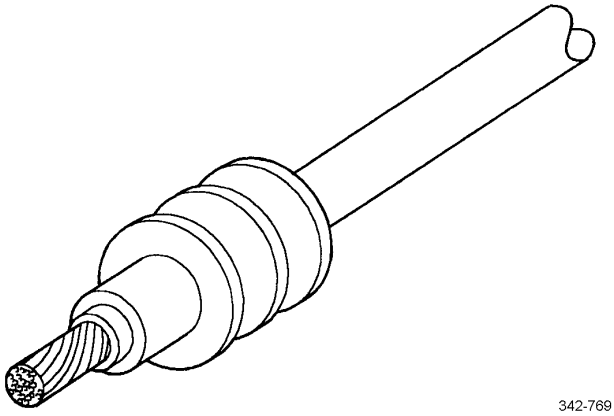

Figure 12. Proper Cable Seal Position.

COMMERCIAL CONNECTOR REPAIR - CONTINUED

(9) Crimp new terminal onto wire using crimp tool (Figure 13).

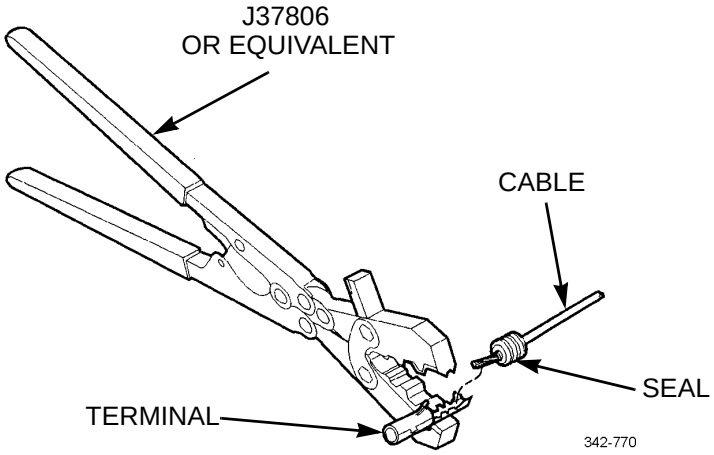

Figure 13. Crimping Procedure.

4. **Deutsch Connectors.**

a. **Connector Part Numbers.**

(1) Deutsch connectors have cable seals molded into the connector. These connectors are “push-to-seat” connectors with cylindrical terminals. The diagnostic connector terminals are gold plated for clarity.

(2) Deutsch connectors and their associated part numbers are listed in Table 5.

COMMERCIAL CONNECTOR REPAIR - CONTINUED

Table 5. Deutsch Connectors and Part Numbers.

DIAGNOSTIC CONNECTOR	
Connector	P/N: 23513052
Terminal	P/N: 23513053
Protective Cap	P/N: 23413054
Plug	P/N: 23507136
ENGINEMINDER	
Connector	P/N: 23512222
Terminal	P/N: 23507132
Plug	P/N: 23507136
MASTERMIND - POWER AND COMMUNICATION LINK	
Connector	P/N: 23512221
Terminal	P/N: 23507132
Plug	P/N: 23507136
MASTERMIND - INPUTS AND OUTPUTS	
Connector	P/N: 23512223
Terminal	P/N: 23507066
Plug	P/N: 23507136

b. **Installation.**

(1) Strip approximately 1/4 in (6.4 mm) of insulation from cable.

(2) Remove lock clip, raise wire gage selector, and rotate knob to number matching gage wire being used.

(3) Lower selection and insert lock clip.

(4) Position contact so that the crimp barrel is 1/32 in (0.8 mm) above four indenters (Figure 14). Crimp cable.

COMMERCIAL CONNECTOR REPAIR - CONTINUED

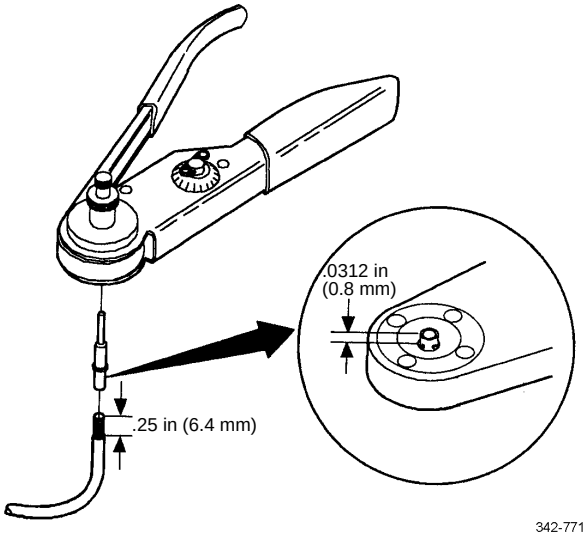

Figure 14. Setting Wire Gage Selector and Positioning Contact.

(5) Grasp contact approximately 1 in (2.54 mm) behind contact crimp barrel.

(6) Hold connector with rear grommet facing you (Figure 15).

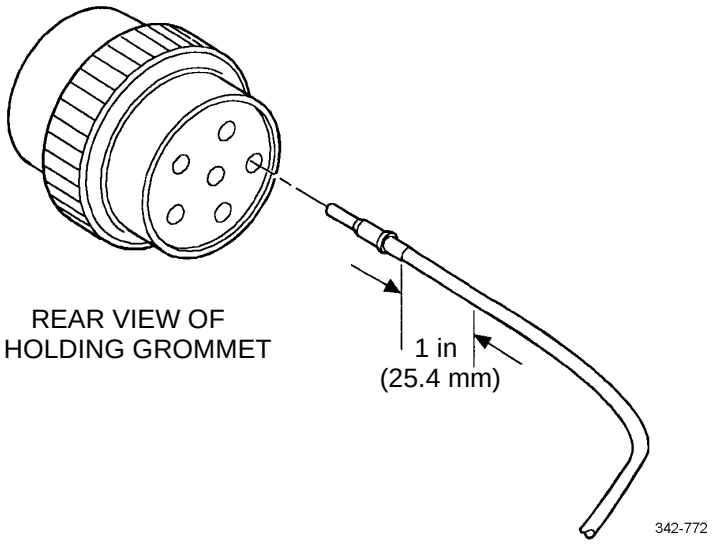

Figure 15. Pushing Contact into Grommet.

COMMERCIAL CONNECTOR REPAIR - CONTINUED

(7) Push contact into grommet until a positive stop is felt (Figure 15). A slight tug will confirm that it is properly locked into place (Figure 16).

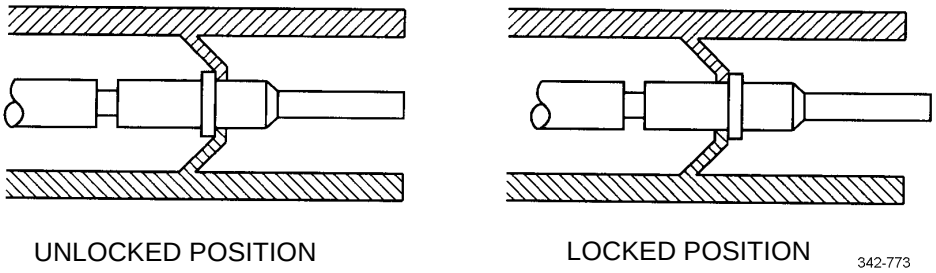

Figure 16. Locking Terminal into Connector.

c. **Removal.** The appropriate size removal tool should be used when removing cables from connectors. The proper removal tool size is listed in Table 1.

(1) With rear insert toward you, snap appropriate size removal tool over cable of contact to be removed (Figure 17).

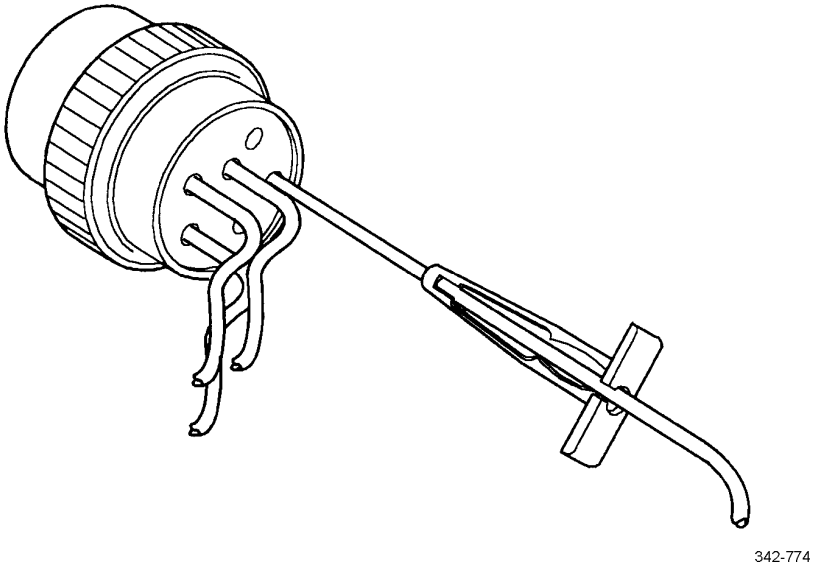

Figure 17. Removal Tool Position.

COMMERCIAL CONNECTOR REPAIR - CONTINUED

(2) Slide tool along cable into insert cavity until it engages and resistance is felt. DO NOT twist or insert tool at an angle (Figure 18).

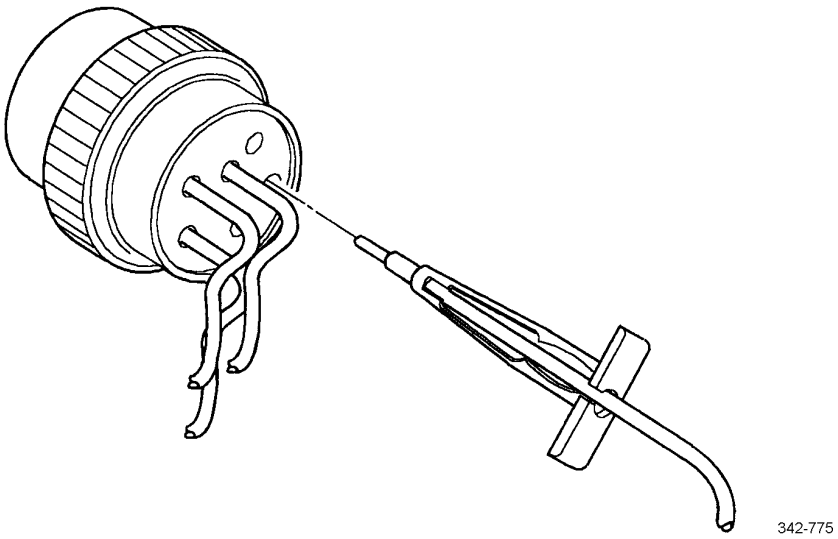

Figure 18. Removal Tool Insertion.

(3) Pull contact cable assembly out of connector. Keep reverse tension on cable and forward tension on tool.

SPLICING

1. **Splicing Guidelines.**

   a. The following are guidelines which may be used for splices. The methods described are not the only acceptable methods. Any method should produce a high quality, tight splice with durable insulation which can be expected to last the life of the vehicle.

   b. The selection of crimpers and splice connectors is optional. Select a high quality crimper equivalent to Kent-Moore tool J38706 and commercially available splice clips.

   c. The following is a list of tools required for splicing wires:

   - Soldering iron
   - Rosin core solder
   - Wire strippers
   - Heat shrink tubing
   - Splice clips
   - Crimp pliers

2. **Splicing Straight Leads.**

   a. Locate broken wire.

   b. Remove insulation as required. Ensure exposed wire is clean and not corroded.

   c. Slide a sleeve of shrink wrap on wire long enough to cover splice and overlap wire insulation, about 1/4 in (6.4 mm) on both sides.

SPLICING - CONTINUED

d. Insert one wire into splice clip (P/N: 0597428 or equivalent) and crimp.

e. Insert other wire into splice and crimp (Figure 19).

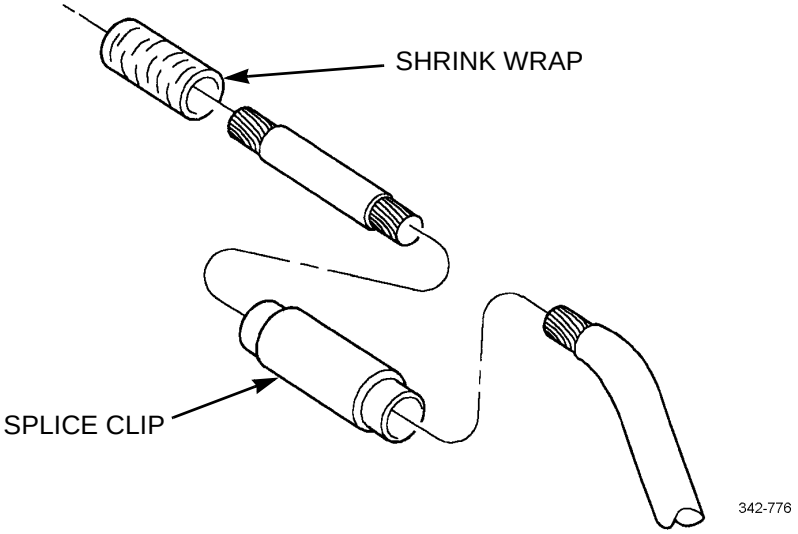

Figure 19. Spliced Wire.

3. **Soldering Splice Connectors.** See TB SIG 222 for more information about solder and soldering. Soldering splice connectors is optional. To solder splice connectors:

   a. You MUST use rosin core solder.

   b. Check exposed wire before splice is crimped in connector. Exposed wire MUST be clean before splice is crimped.

   c. Use a suitable electronic soldering iron to heat wires. Apply solder to heated wire (not to soldering iron) allowing sufficient solder flow into splice joint.

   d. Pull on connection to ensure crimping and soldering integrity.

4. **Heat Shrinkable Tubing.**

   a. Shrink wrap is required. Alpha FIT-300, Raychem TAT-125 or any equivalent heat shrink dual wall epoxy encapsulating adhesive polyolefin is required. The following are sources of supply:

Alpha Wire Corp
711 Lidgerwood Ave
P.O. Box 711
Elizabeth, New Jersey 07207-0711
1-800-5 2ALPHA

Raychem Corporation, Thermofit Div
300 Constitution Drive, Bldg. B
Menlo Park, CA 94025
415-361-3860

SPLICING - CONTINUED

b. To heat shrink wrap a splice:

(1) Select correct diameter to allow a tight wrap when heated. Heat shrink wrap MUST be long enough to overlap wire insulation about 1/4 in (6.4 mm) on both sides of splice.

(2) Heat shrink wrap with a heat gun; do not concentrate heat in one location, but play heat over entire length of shrink wrap until joint is complete.

5. **Splicing Multiple Broken Wires.**

a. Stagger position of each splice as illustrated (Figure 20).

b. You MUST stagger positions to prevent a large bulge in harness and to prevent wires from chafing against each other.

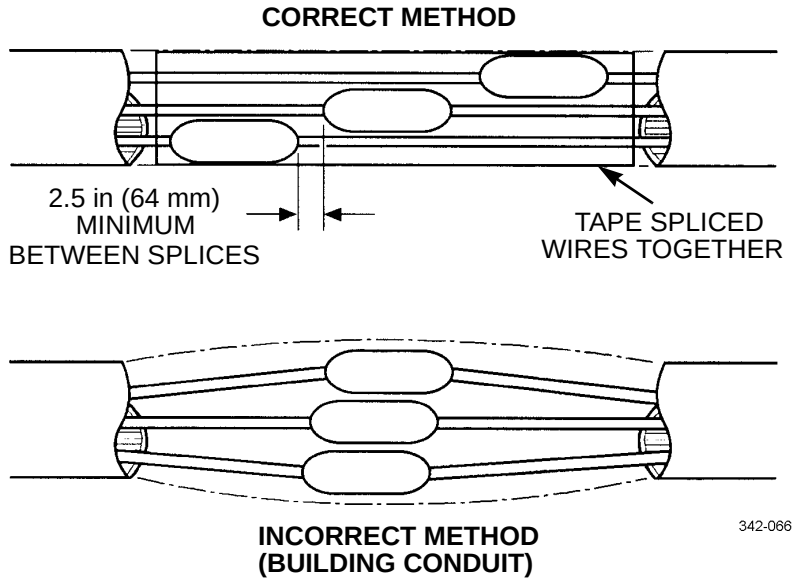

Figure 20. Multiple Splices.

SPLICING - CONTINUED

6. **Three-Wire Splices.**
   a. Three-way splice connectors are commercially available to accommodate three-wire splices.
   b. The technique is the same as a single butt splice connector (Figure 21).

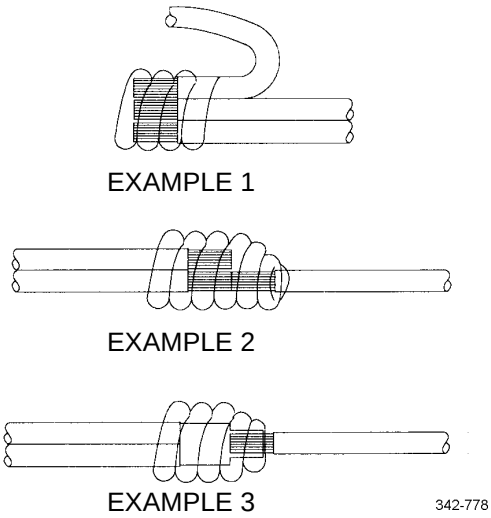

Figure 21. Three-way Splices.

END OF WORK PACKAGE

SHIFT TOWER MAINTENANCE (WTEC III) 0152 00

THIS WORK PACKAGE COVERS

Removal, Installation

INITIAL SETUP

Tools and Special Tools

Tool kit, general mechanic's (Item 50, WP 0306 00)

Equipment Condition

Master battery switch in OFF position (TM 9-2320-302-10)

REMOVAL

1. Remove two screws (4) and washers (5) from side of shift tower (6).
2. Lift shift selector (1) from shift tower (6) and disconnect transmission harness connector (9) from shift selector connector (10).
3. Remove two nuts (3), washers (2), and bracket (11) from shift selector (1).
4. Remove eight screws (7), washers (8), and shift tower (6) from cab floor.

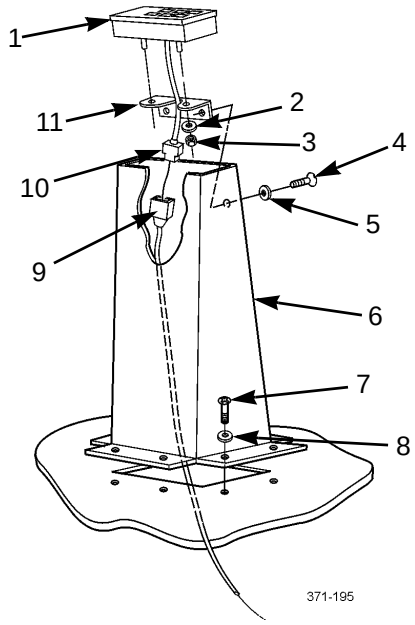

INSTALLATION

1. Position shift tower (6) on cab floor and install eight washers (8) and screws (7).
2. Position bracket (11) on shift selector (1) and install two washers (2) and nuts (3).
3. Connect shift selector connector (10) to transmission harness connector (9).
4. Position shift selector (1) on shift tower (6) and install two washers (5) and screws (4).

END OF WORK PACKAGE

DASH-MOUNTED SHIFT SELECTOR AND BRACKET REPLACEMENT 0152 01

THIS WORK PACKAGE COVERS

Shift Selector and Bracket Removal, Shift Selector and Bracket Installation

INITIAL SETUP

Maintenance Level

Unit

References

TM 9-2320-302-10

Tools and Special Tools

Tool kit, general mechanic's (Item 50, WP 0306 00)

NOTE

Shift selector and bracket can be removed from dash as an assembly or shift selector can be removed from bracket.

SHIFT SELECTOR AND BRACKET REMOVAL

1. Rotate three turnlock fasteners (1) and remove cover (2).

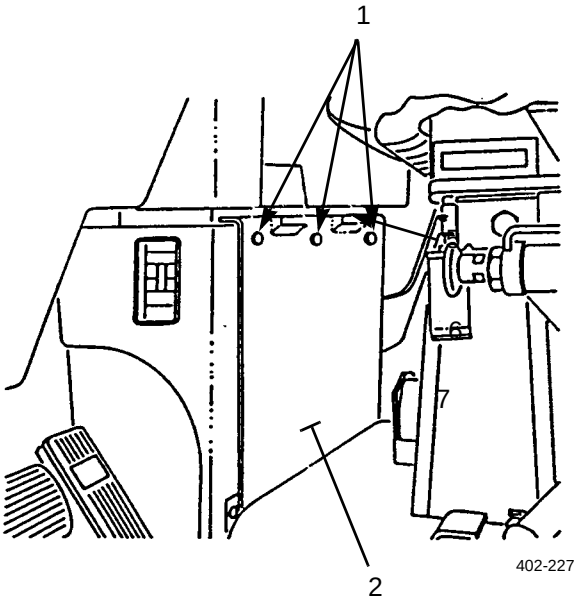

SHIFT SELECTOR AND BRACKET REMOVAL - CONTINUED

2. Under dash, locate and disconnect shift selector harness (7) connector from vehicle harness connector.
3. Remove two nuts (8), two washers (9), and shift selector (3) from bracket (4).
4. If necessary, remove four bolts (5), four washers (6), and bracket (4) from dash.

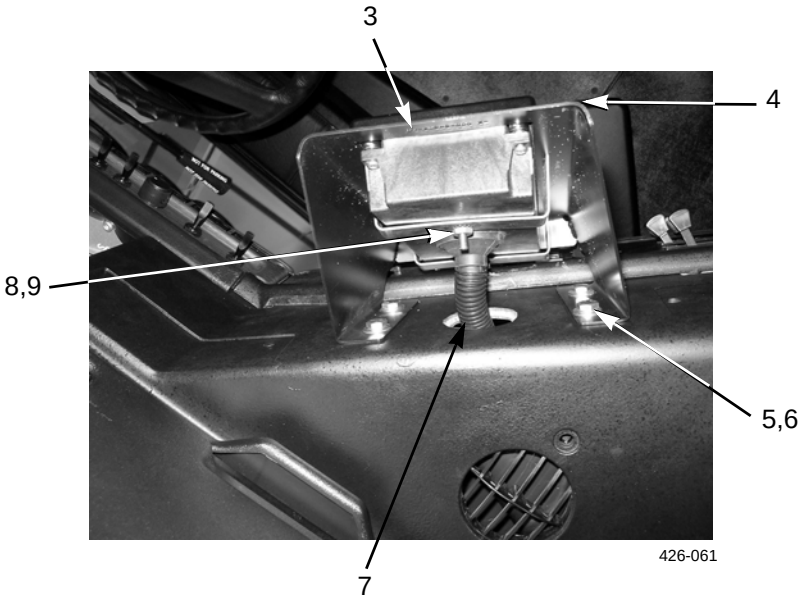

SHIFT SELECTOR AND BRACKET INSTALLATION

1. If removed, position bracket (4) on dash and install four bolts (5) and four washers (6).
2. Feed shift selector harness (7) connector through hole in dash and position selector (3) on bracket (4).
3. Install two nuts (8) and two washers (9) securing shift selector (3) to bracket (4).
4. Under dash, connect shift selector harness (7) connector to vehicle harness connector.

SHIFT SELECTOR AND BRACKET INSTALLATION - CONTINUED

5. Position cover (2) and rotate three turnlock fasteners.

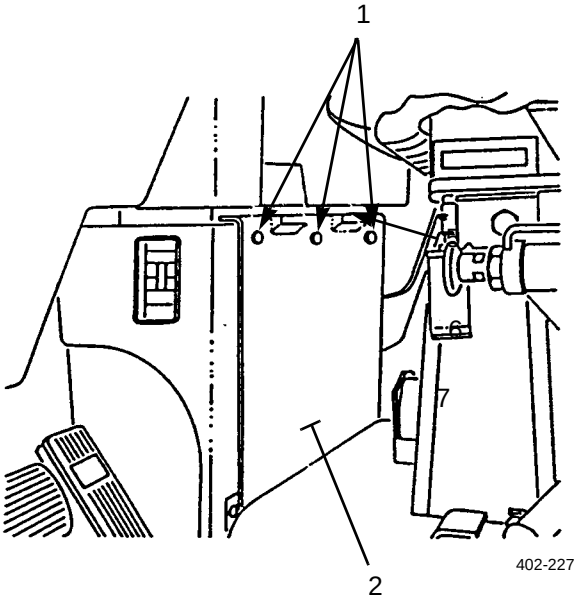

END OF WORK PACKAGE

SHIFT TOWER MAINTENANCE (M916A3, M917A2) 0153 00

THIS WORK PACKAGE COVERS

CTIS Control Panel Replacement, Shift Selector Replacement, Transfer Case (All-Wheel Drive) Switch Replacement, Shift Tower Replacement

INITIAL SETUP

Tools and Special Tools

Tool kit, general mechanic's (Item 50, WP 0306 00)

Materials/Parts

Washer, lock (P/N MS35338-44) (3)

Equipment Condition

Master battery switch in OFF position (TM 9-2320-302-10)

References

TM 5-3805-264-14&P

TM 9-2320-302-10

NOTE

M917A2 shift tower is illustrated.

CTIS CONTROL PANEL REPLACEMENT

1. Disconnect wiring harness connector (8) from CTIS control panel (4).
2. Remove screw (7), lockwasher (6), and ground lead (5). Discard lockwasher.
3. Remove two screws (3), two lockwashers (2), and CTIS control panel (4) from shift tower (1). Discard lockwashers.
4. Position CTIS control panel (4) on shift tower (1).
5. Install two new lockwashers (2) and two screws (3).
6. Install ground lead (5), new lockwasher (6), and screw (7).
7. Connect wiring harness connector (8) to CTIS control panel (4).

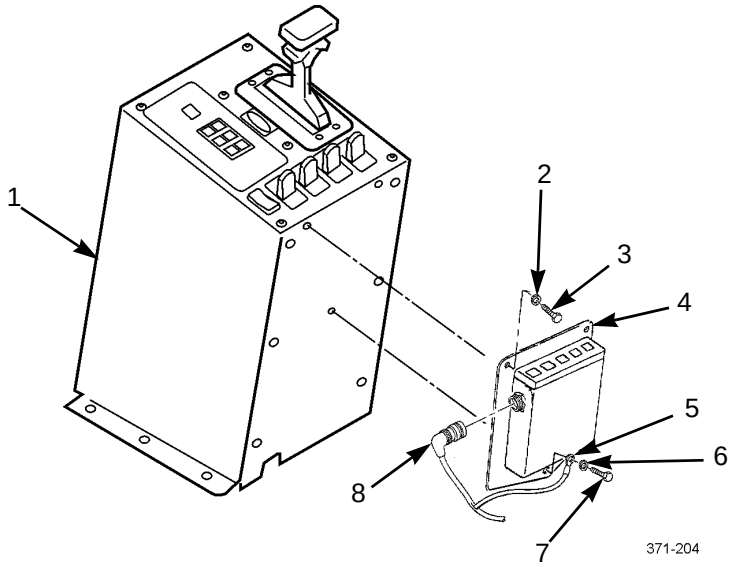

SHIFT SELECTOR REPLACEMENT

1. Remove six screws (9) and rear panel (10).

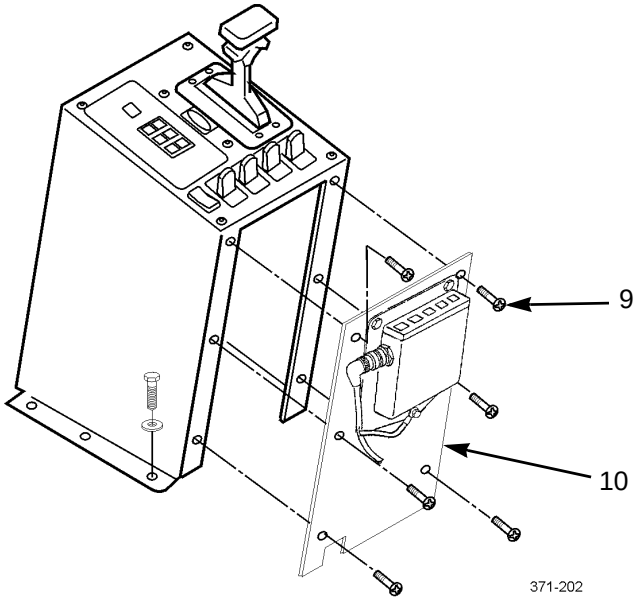

2. Disconnect transmission harness (12) from shift selector harness (11).

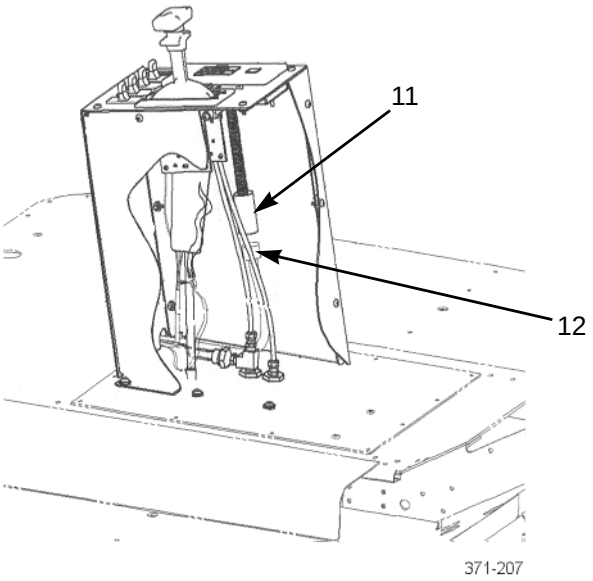

SHIFT SELECTOR REPLACEMENT - CONTINUED

3. Remove two nuts (16) and washers (17) securing shift selector (13) to bracket (14).
4. Remove shift selector (13) through top of shift tower cover (15).

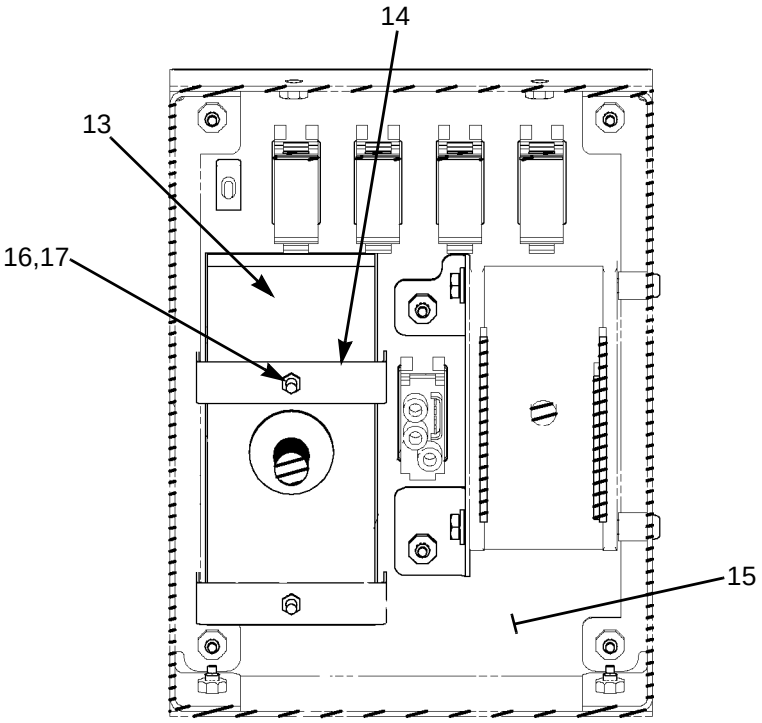

371-206

5. Position shift selector (13) through top of shift tower cover (15).
6. Install two nuts (16) and washers (17) securing shift selector (13) to bracket (14).
7. Connect transmission harness (12) to shift selector harness (11).

SHIFT SELECTOR REPLACEMENT - CONTINUED

8. Install rear panel (10) with six screws (9).

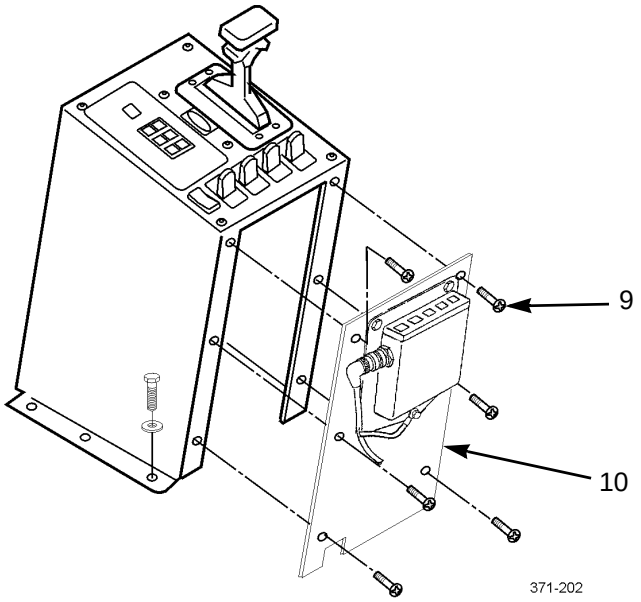

TRANSFER CASE (ALL-WHEEL DRIVE) SWITCH REPLACEMENT

NOTE

Although shift towers are slightly different in design, replacement of transfer case (all-wheel drive) switch is same. M917A2 w/MCS shift tower is illustrated.

1. Drain air system (TM 9-2320-302-10).
2. Remove six screws (9) and rear panel (10).
3. Disconnect two air lines (19) from transfer case switch (18).

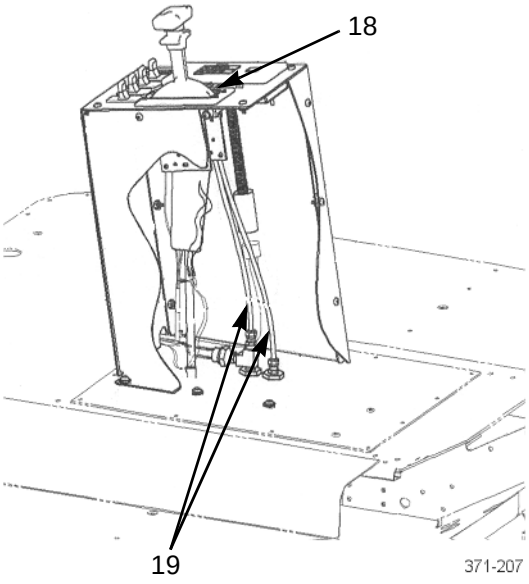

TRANSFER CASE (ALL-WHEEL DRIVE) SWITCH REPLACEMENT - CONTINUED

4. Depress two tangs (20) on transfer case switch (18) and remove switch through top of shift tower cover (15).

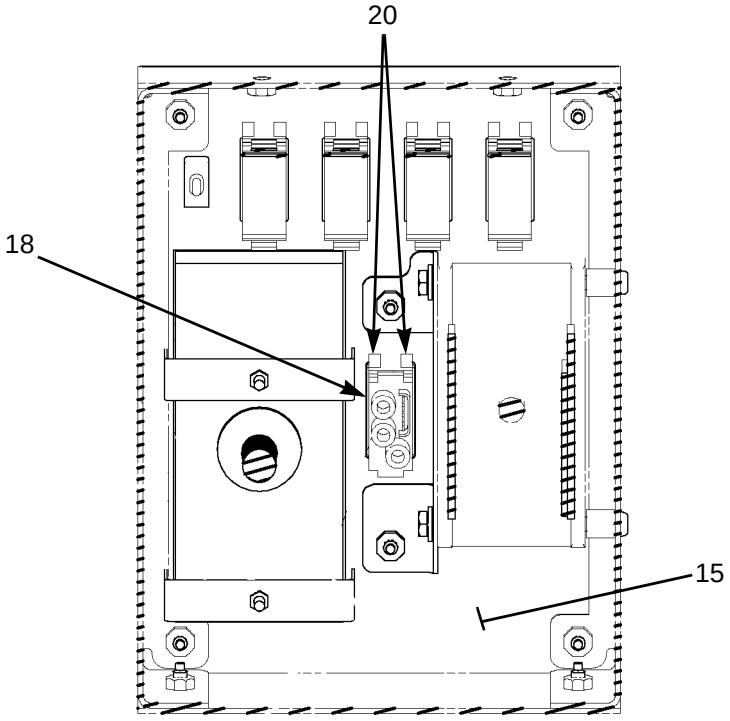

371-206

5. Position transfer case switch (18) on shift tower cover (15).
6. Apply slight downward pressure on transfer case switch (18) until two tangs (20) snap into place.
7. Connect two air lines (19) to transfer case switch (18).
8. Install rear panel (10) with six screws (9).

SHIFT TOWER REPLACEMENT

1. Remove six screws (9) and rear panel (10).

.

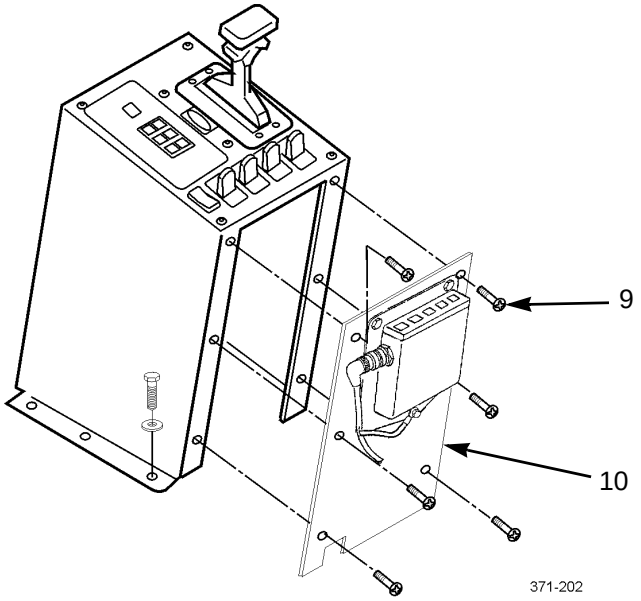

2. Disconnect transmission harness (12) from shift selector harness (11).
3. Disconnect two air lines (19) from transfer case switch (18).
4. Disconnect hydraulic control lever cable (20) (M917A2) (TM 5-3805-264-14&P).

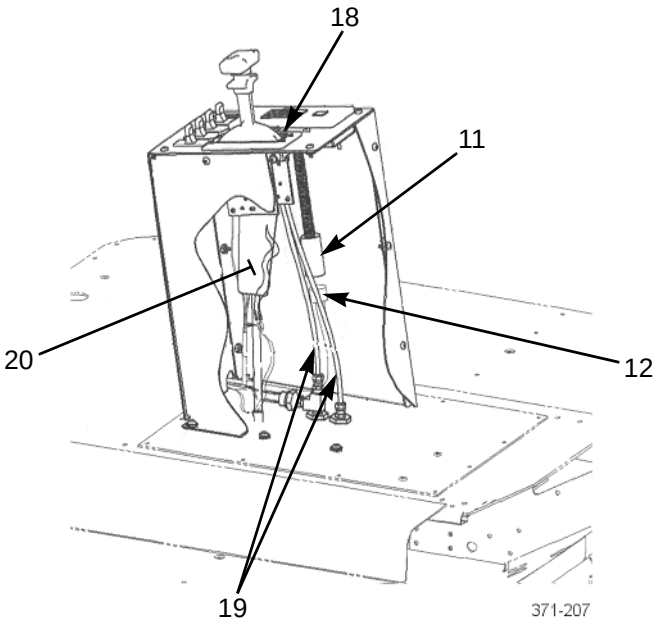

SHIFT TOWER REPLACEMENT - CONTINUED

5. Remove six bolts (22), six washers (21) and shift tower (1).

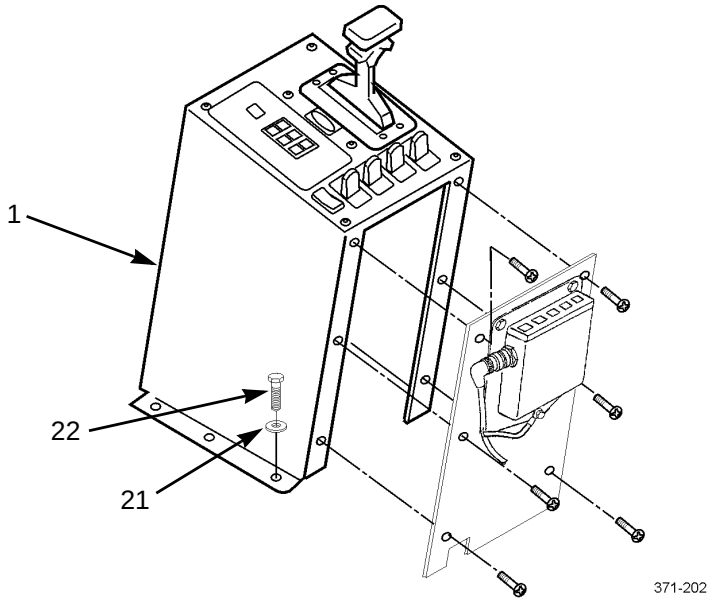

6. Position shift tower (1) and install six washers (21) and six bolts (22).
7. Connect hydraulic control lever cable (20) (M917A2) (TM 5-3805-264-14&P).
8. Connect two air lines (19) to transfer case switch (18).
9. Connect shift selector harness (11) to transmission harness (12).
10. Position rear panel (10) and install six screws (9).

END OF WORK PACKAGE

TRANSMISSION OIL FILL/LEVEL CHECK TUBE REPLACEMENT 0154 00

THIS WORK PACKAGE COVERS

Removal, Installation

INITIAL SETUP

Tools and Special Tools

Tool kit, general mechanic's (Item 50, WP 0306 00)

Wrench, torque, 15-75 lb-ft (Item 57, WP 0306 00)

Materials/Parts

Strap, tiedown (Item 33, WP 0305 00)

Equipment Condition

Transmission dipstick removed (TM 9-2320-302-10)

REMOVAL

1. Remove screw (10) and clamp (9) from right side of transmission (8).

NOTE

Note amount and location of tiedown straps to aid in installation.

2. Remove and discard tiedown straps.
3. Remove two nuts (1), washers (2), U-bolt (3), and transmission oil fill/level check tube (7) from transmission bracket (6) and transmission (8).

NOTE

Perform step 3 only if transmission bracket is damaged.

4. Remove two screws (4), washers (5), and transmission bracket (6) from transmission (8).

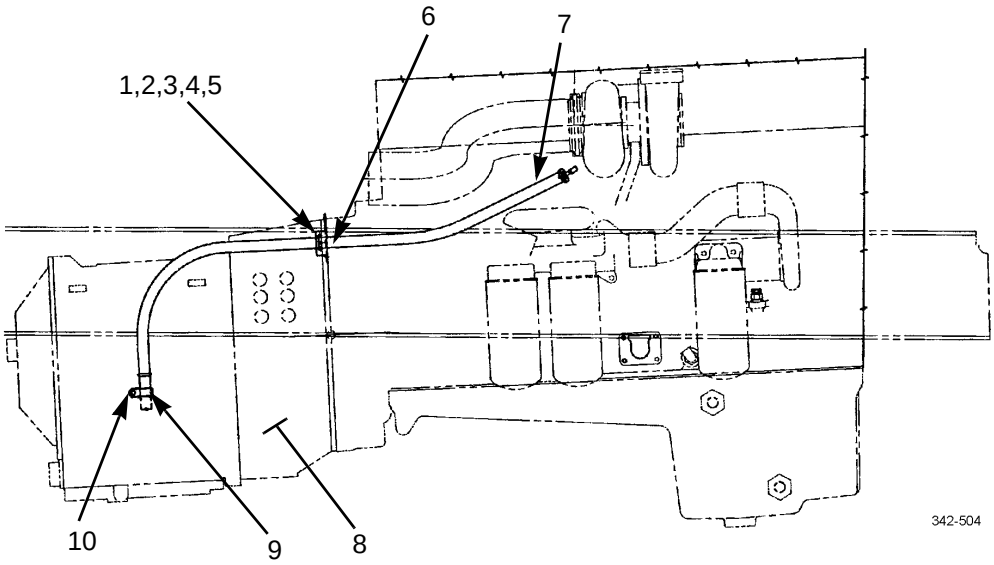

INSTALLATION

NOTE

Perform step 1 if transmission bracket was removed.

1. Install transmission bracket (6) on transmission (8) with two washers (5) and screws (4). Tighten screws to 54-65 lb-ft (73-88 Nm).
2. Position clamp (9) on transmission oil fill/level check tube (7) and install transmission oil fill/level check tube on transmission (8) and transmission bracket (6) with U-bolt (3), two new lockwashers (2), and nuts (1).
3. Install clamp (9) on right side of transmission (8) with screw (10).
4. Install tiedown straps.

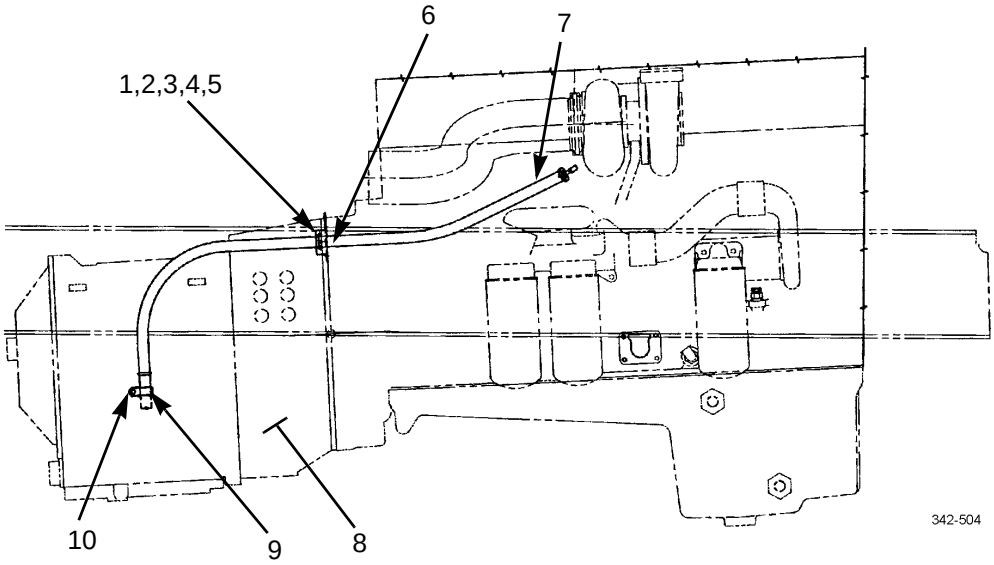

5. Install transmission dipstick (TM 9-2320-302-10).

END OF WORK PACKAGE

TRANSMISSION OIL COOLER LINES AND FITTINGS REPLACEMENT 0155 00

THIS WORK PACKAGE COVERS

Removal, Installation

INITIAL SETUP

Tools and Special Tools

Tool kit, general mechanic's (Item 50, WP 0306 00)

Materials/Parts

Compound, sealing, pipe (Item 13, WP 0305 00)

Oil, lubricating (Item 22, WP 0305 00)

Materials/Parts - Continued

Straps, tiedown (Item 33, WP 0305 00)

Packing, preformed (P/N 711509-7) (4)

Equipment Condition

Transmission oil drained (WP 0023 00)

REMOVAL

NOTE

Perform steps 1 and 2 to free two transmission oil cooler lines from each of four support brackets.

1. Remove nut (4), washer (5), screw (6), and clamp (10) from support bracket (7).
2. Remove clamp (10) from two transmission oil cooler lines (8 and 9).

NOTE

Perform steps 3 thru 7 at front of transmission.

3. Remove nut (3) and wire terminal (2) from temperature sensor (1).

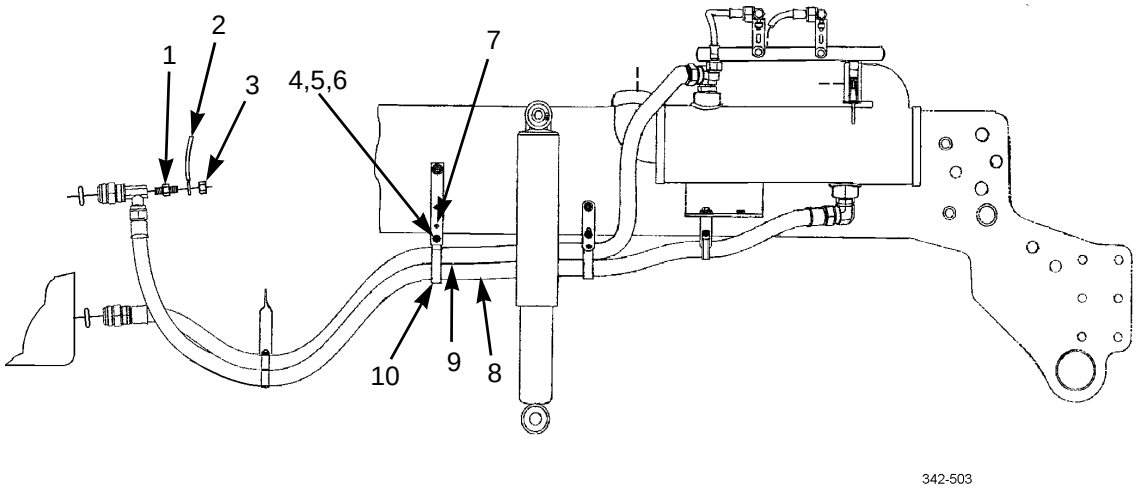

REMOVAL - CONTINUED

4. Remove temperature sensor (1) from elbow fitting (13).
5. Disconnect transmission oil cooler lines (8 and 9) from elbow fitting (13) and fitting (23).
6. Loosen jamnuts (12 and 22) of elbow fitting (13) and fitting (23) and remove from transmission (24).
7. Remove two preformed packings (11). Discard preformed packings.

NOTE

Perform steps 8 thru 12 at transmission oil cooler.

8. Disconnect transmission oil sample line (16) from elbow (17).
9. Remove elbow (17) from elbow (14).
10. Disconnect transmission oil cooler lines (8 and 9) from elbows (14 and 15).

NOTE

Remove tiedown straps as necessary and discard.

11. Remove transmission oil cooler lines (8 and 9) from vehicle.
12. Loosen jamnuts (18 and 19) of elbow fittings (15 and 17) and remove from transmission oil cooler (21).
13. Remove two preformed packings (20). Discard preformed packings.

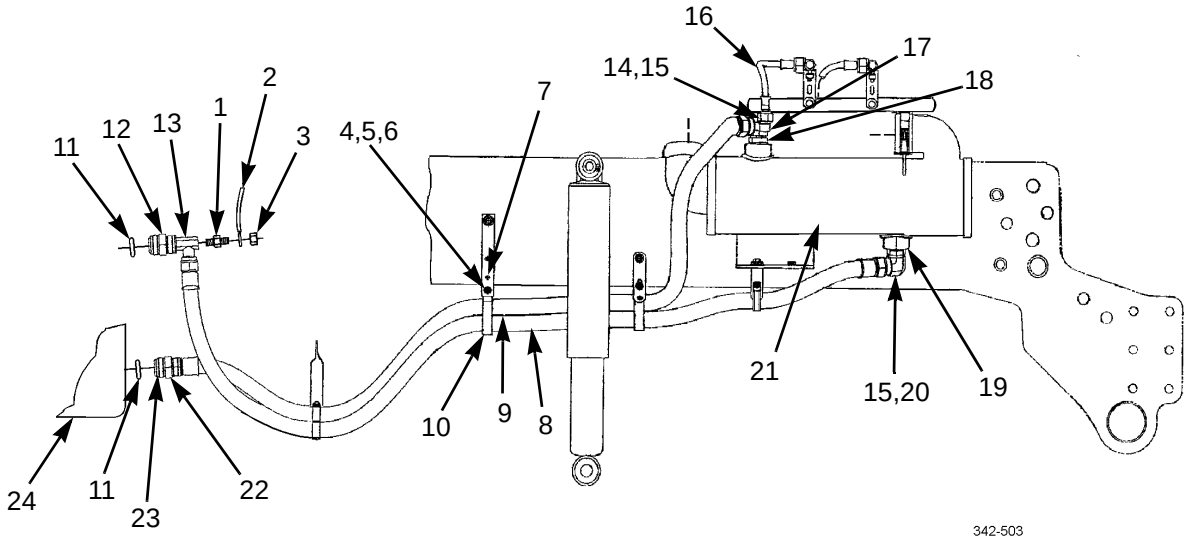

INSTALLATION

NOTE

- Lightly lubricate new preformed packings with lubricating oil before installing packings.
- Perform steps 1 through 6 at transmission oil cooler.

1. Install two new preformed packings (20) to elbow fittings (14 and 15).

INSTALLATION - CONTINUED

2. Install two elbow fittings (14 and 15) to transmission oil cooler (21) and tighten jamnuts (18 and 19).
3. Position transmission oil cooler lines (8 and 9) to vehicle.
4. Connect transmission oil cooler lines (8 and 9) to two elbow fittings (14 and 15).


WARNINGS

Adhesives and sealing compounds can burn easily, can give off harmful vapors, and are harmful to skin and clothing. To avoid injury or death, keep away from open fire and use in a well-ventilated area. If adhesives or sealing compound contacts skin or clothing, wash immediately with soap and water.

5. Apply pipe sealing compound to threads of elbow (17) and install elbow to elbow (14).
6. Connect transmission oil sample line (16) to elbow (17).

NOTE

Perform steps 7 through 11 at front of transmission.

7. Install two new preformed packings (11) to elbow fitting (13) and fitting (23).
8. Install elbow fitting (13) and fitting (23) to transmission (24) and tighten jamnuts (12 and 22).
9. Connect transmission oil cooler lines (8 and 9) to fitting (23) and elbow fitting (13).
10. Apply pipe sealing compound to threads of temperature sensor (1) and install temperature sensor to elbow fitting (13).
11. Install wire terminal (2) to temperature sensor (1) with nut (3).

NOTE

Perform steps 12 and 13 to attach two transmission oil cooler lines to each of four support brackets.

12. Position clamps (10) around transmission oil cooler lines (8 and 9).
13. Install clamp (10) to support brackets (7) with screws (6), washer (5), and nut (4). Install new tiedown straps as necessary.
14. Fill transmission oil (WP 0023 00).

END OF WORK PACKAGE

TRANSMISSION OIL FILTER ELEMENTS REPLACEMENT 0156 00

THIS WORK PACKAGE COVERS

Removal, Installation

INITIAL SETUP

Tools and Special Tools

Tool kit, general mechanic's (Item 50, WP 0306 00)

Pan, drain (Item 29, WP 0306 00)

Wrench, torque, 15-75 lb-ft (Item 57, WP 0306 00)

Materials/Parts

Oil, lubricating (Item 22, WP 0305 00)

Element, filter (P/N 29538232) (2)

Materials/Parts - Continued

O-ring (P/N 29524448)

O-ring (P/N 29507437)

References

WP 0166 00

TM 9-2320-302-10

NOTE

Perform this procedure for two transmission oil filter elements.

REMOVAL

1. Place suitable container under transmission.
2. Remove drain plug (8) and o-ring (7).
3. Disconnect driveline (M916A3, M917A2) (WP 0166 00) immediately below transmission oil filters.
4. Remove six screws (6), cover (5), preformed packing (4), seal (3), and transmission oil filter element (2) from bottom of transmission (1). Discard preformed packing, seal, and transmission oil filter element.

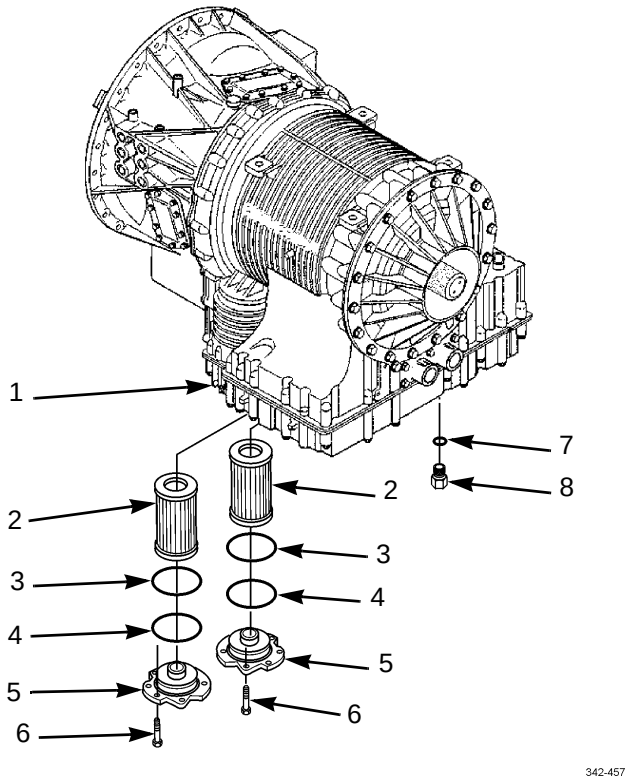

INSTALLATION

1. Apply a light coat of lubricating oil to new performed packing (4) and sealing surface of new transmission oil filter element (2).
2. Position preformed packing (4), new seal (3), and transmission oil filter element (2) on cover (5).
3. Install cover (5) on transmission (1) with six screws (6). Tighten screws to 38-45 lb-ft (52-61 Nm).
4. Apply a light coat of lubricating oil to o-ring (7).
5. Install o-ring (7) and drain plug (8).

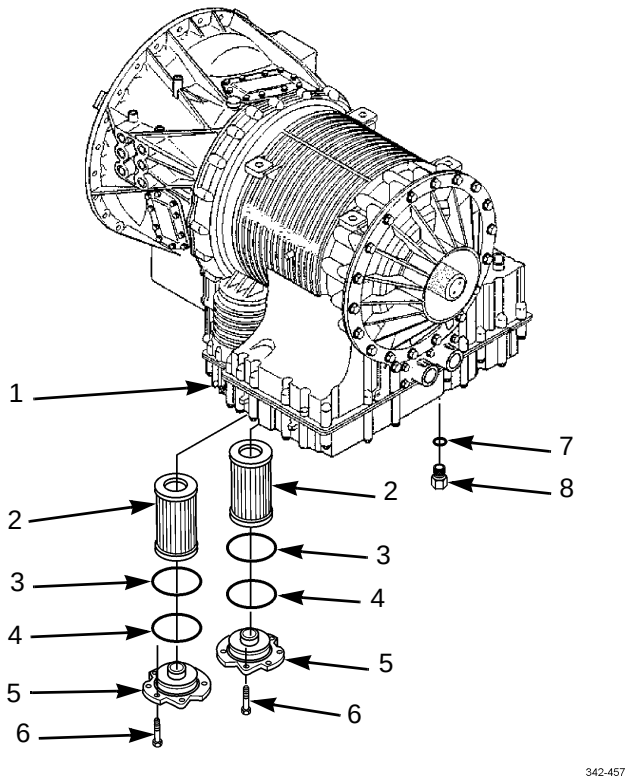

6. Refill transmission with oil (TM 9-2320-302-10).
7. Connect driveline (WP 0166 00).

END OF WORK PACKAGE

TRANSMISSION ELECTRONIC CONTROL UNIT (ECU) AND TRANSMISSION CONTROL MODULE (TCM) REPLACEMENT

0157 00

THIS WORK PACKAGE COVERS

Removal, Installation

INITIAL SETUP

Tools and Special Tools

Tool kit, general mechanic's (Item 50, WP 0306 00)

Wrench set, screwdriver, torx (Item 61, WP 0306 00)

Materials/Parts

Strap, tiedown (Item 33, WP 0305 00)

Tags, marker (Item 34, WP 0305 00)

Equipment Conditions

Master battery switch in OFF position (TM 9-2320-302-10)

REMOVAL

NOTE

Tag connectors to aid in installation.

1. Cut and discard tiedown strap (5).
2. Disconnect three transmission ECU harnesses (6, 7, and 8) from ECU (2) (WTEC III).
3. Disconnect one TCM harness (6) from TCM (2) (GEN 4).
4. Remove three screws (1) and ECU/TCM (2) from mounting plate (3) on cab rear wall.
5. If damaged, remove three screws (4) and mounting plate (3) from cab rear wall.

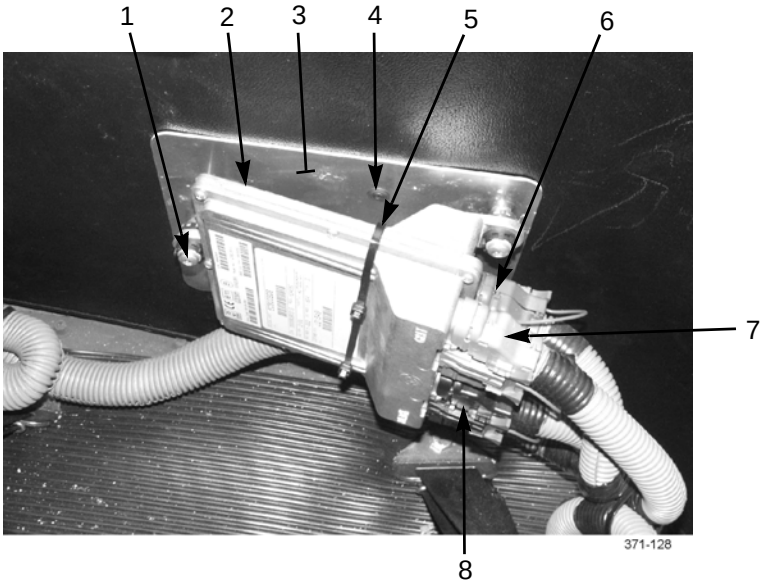

TRANSMISSION ELECTRONIC CONTROL UNIT (ECU) AND TRANSMISSION CONTROL MODULE (TCM) REPLACEMENT - CONTINUED 0157 00

INSTALLATION

1. If removed, position mounting plate (3) on cab rear wall and install three screws (4).
2. Position ECU/TCM (2) on mounting plate (3) and install three screws (1).
3. Connect three transmission ECU harnesses (6, 7, and 8) (WTEC III).
4. Connect one TCM harness (6) to TCM (2) (GEN 4).
5. Install tiedown strap (5) around ECU/TCM (2) and wiring harness conduit (9).

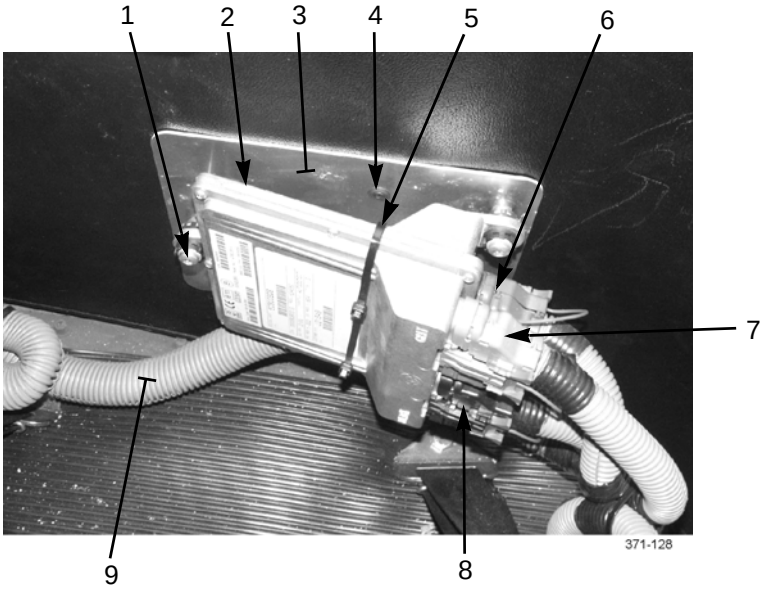

END OF WORK PACKAGE

TRANSMISSION ELECTRONIC CONTROL UNIT (ECU) WIRING HARNESS REPLACEMENT (M915A3 OLD MODEL) 0158 00

THIS WORK PACKAGE COVERS

Removal, Installation

INITIAL SETUP

Tools and Special Tools

Tool kit, general mechanic's (Item 50, WP 0306 00)

Equipment Condition

Master battery switch in OFF position (TM 9-2320-302-10)

REMOVAL

NOTE

Wiring harness and leads are secured in place by cushion clamps and screw terminals. Only remove hardware securing harness or lead to be removed.

Disconnect and remove transmission ECU wiring harness using illustration as a guide.

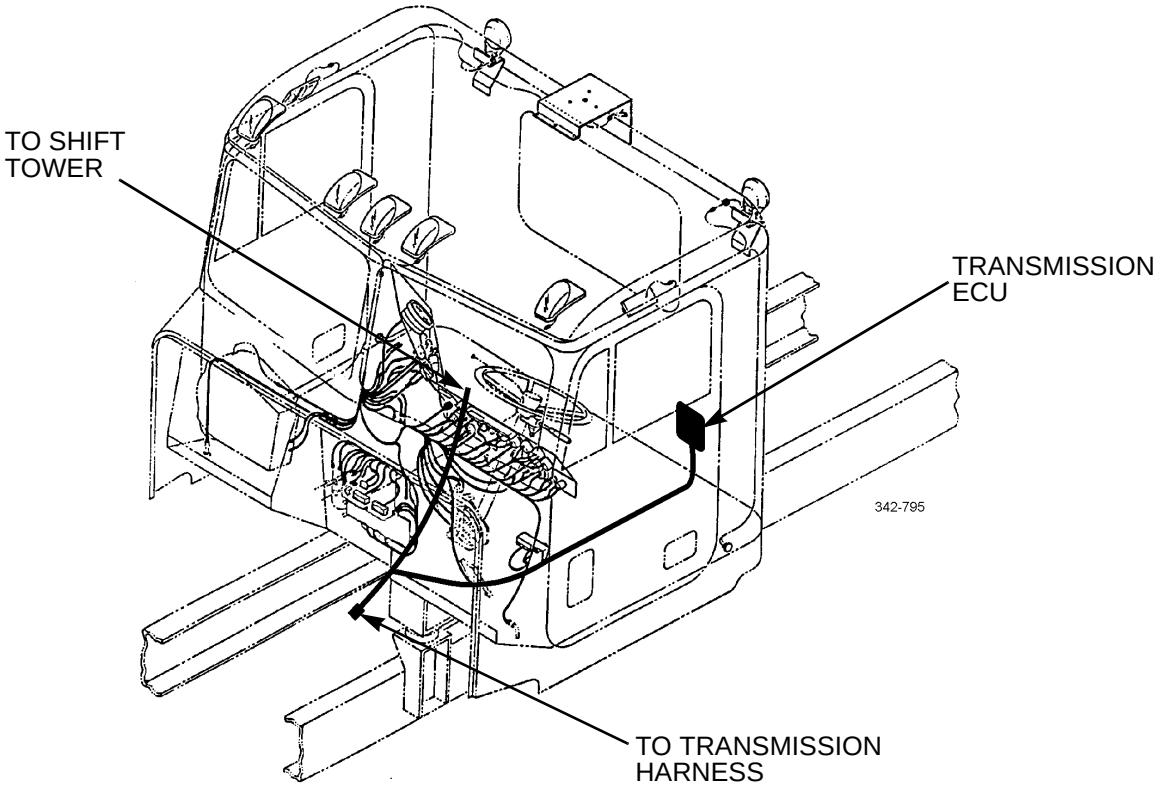

INSTALLATION

NOTE

Wiring harness and leads are secured in place by cushion clamps and screw terminals. Ensure that harness is secure and all hardware is tight.

Install, connect, and secure transmission ECU wiring harness using illustration as a guide.

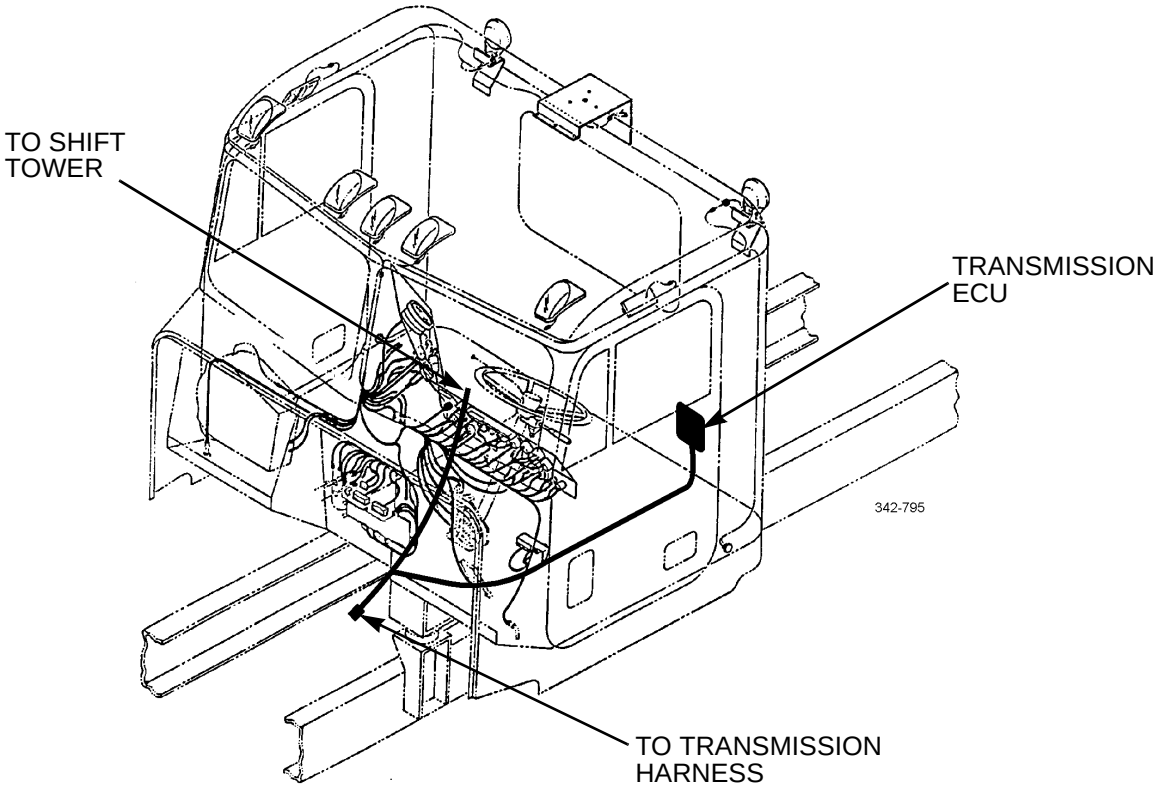

END OF WORK PACKAGE

TRANSMISSION ELECTRONIC CONTROL UNIT (ECU) WIRING HARNESS REPLACEMENT (M915A3 NEW MODEL, M916A3, M917A2) 0159 00

THIS WORK PACKAGE COVERS

Removal, Installation

INITIAL SETUP

Tools and Special Tools

Tool kit, general mechanic's (Item 50, WP 0306 00)

Wrench set, socket attachment, screwdriver, torx (Item 61, WP 0306 00)

Materials/Parts

Straps, tiedown (Item 33, WP 0305 00)

Tags, marker (Item 34, WP 0305 00)

Tape, insulation, electrical (Item 37, WP 0305 00)

References

WP 0151 00

WP 0152 00 or WP 0153 00

WP 0263 00

Equipment Condition

Master battery switch in OFF position (TM 9-2320-302-10)

NOTE

Replacement of transmission ECU wiring harness involves pulling harness through transmission access tunnel. It may be necessary to remove connectors from ends of harness to facilitate this procedure. Refer to WP 0151 00 for electrical connector maintenance procedures.

TRANSMISSION ELECTRONIC CONTROL UNIT (ECU) WIRING HARNESS REPLACEMENT (M915A3 NEW MODEL, M916A3, M917A2) - CONTINUED

0159 00

REMOVAL

NOTE

- Tag wires and connectors to ensure correct installation.
- Remove tiedown straps and electrical tape as required and discard.

1. Disconnect three transmission ECU wiring harness connectors (2) from transmission ECU (1).

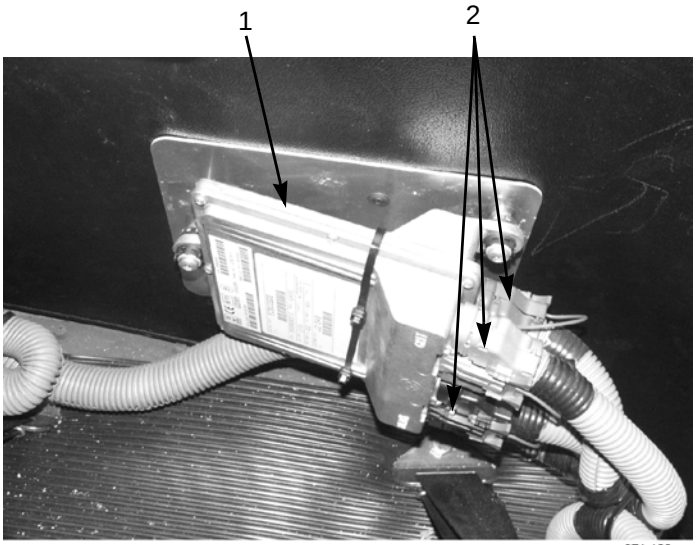

371-128

2. Trace transmission ECU wiring harness (3) to connector (4) at cab floor near driver side door.

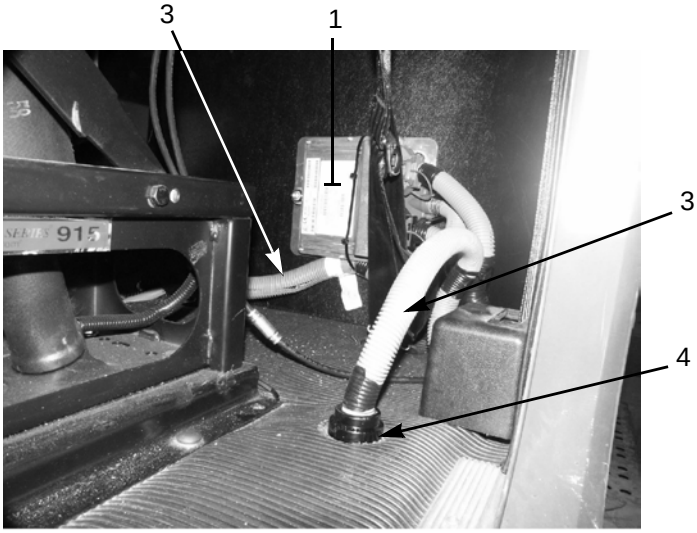

371-170

3. Under cab, disconnect transmission wiring harness (7) from connector (4).
4. Remove nut (5) and lockwasher (6) from connector (4) and push connector up into cab.

REMOVAL - CONTINUED

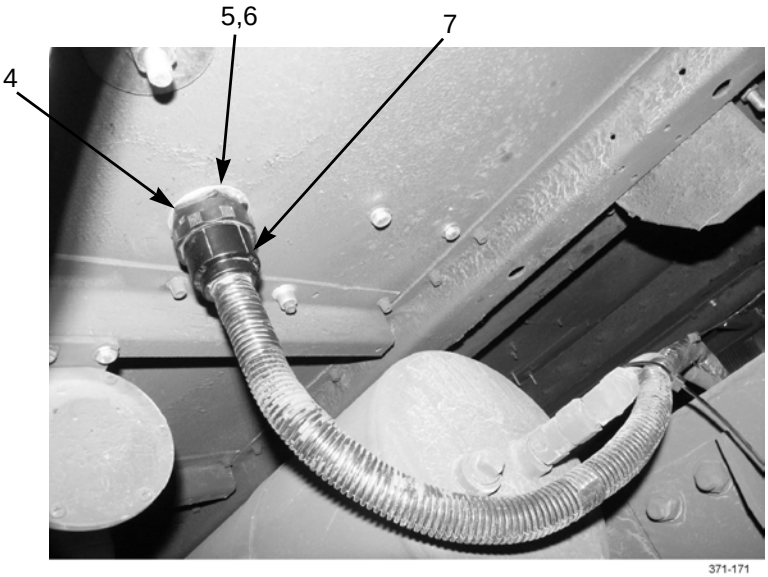

5. Starting at transmission ECU (1), trace branch of transmission ECU wiring harness (3) along back wall of cab to ECU installation behind passenger seat.

6. Remove two screws (10), washers (11), and cover (8) from plate (9).

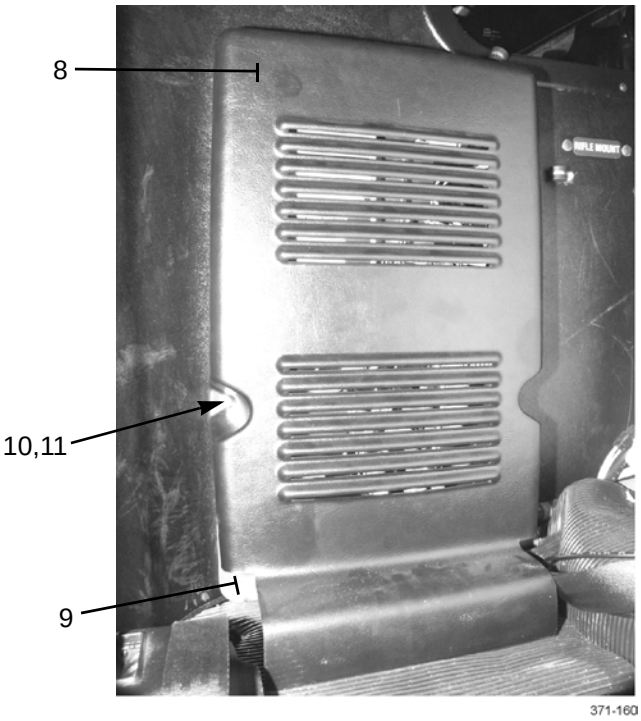

REMOVAL - CONTINUED

7. Disconnect transmission ECU wiring harness connector (12) from transmission bus connector (13) at J1939 bus installation.
8. If transmission bus connector (13) is damaged, disconnect connector (14) from bus connector and remove bus connector.

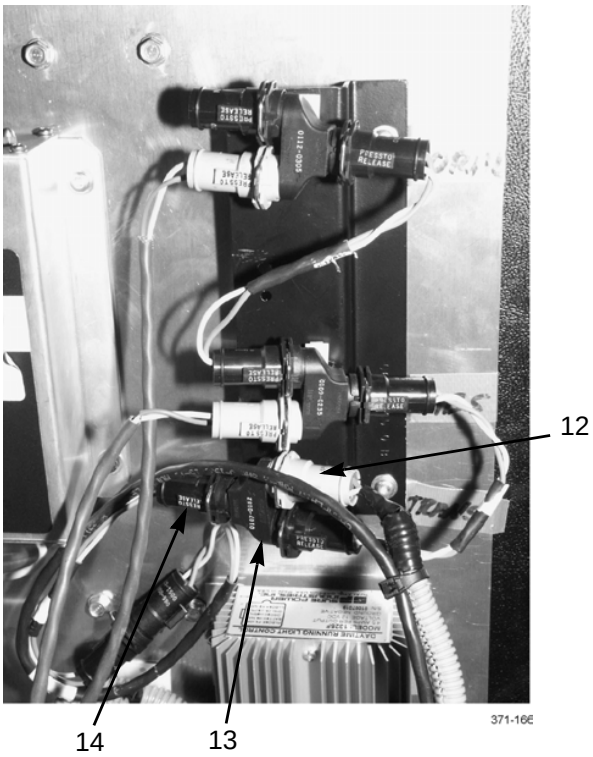

9. For access to branch of transmission ECU wiring harness that is routed to shift tower, remove cab floor mats and insulation pads (WP 0263 00).
10. At shift tower, disconnect transmission ECU wiring harness connector from shift selector connector (WP 0152 00 or WP 0153 00).
11. Remove three screws (15) and access cover (16) at passenger side of cab floor.

REMOVAL - CONTINUED

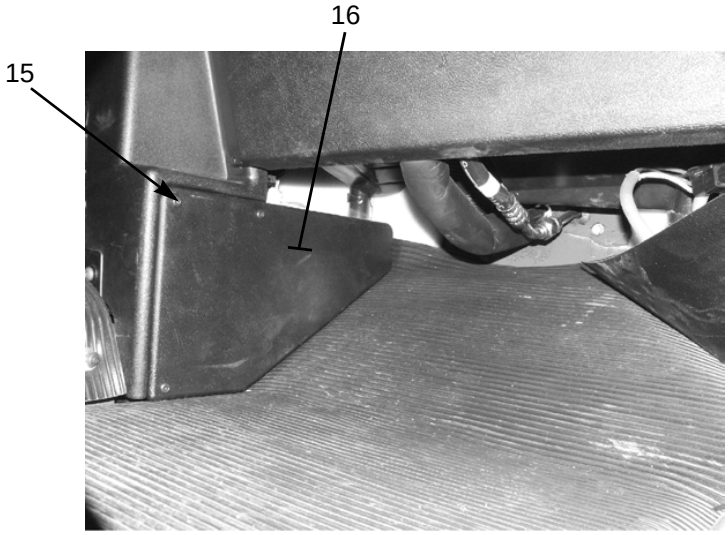

12. Disconnect three transmission ECU wiring harness connectors (17 and 18) from wiring harness connectors.
13. Tie a suitable lacing wire or rope to transmission ECU wiring harness (3). Remove wiring harness from vehicle by pulling harness rearward through transmission access tunnel (19). DO NOT remove lacing wire or rope from tunnel.

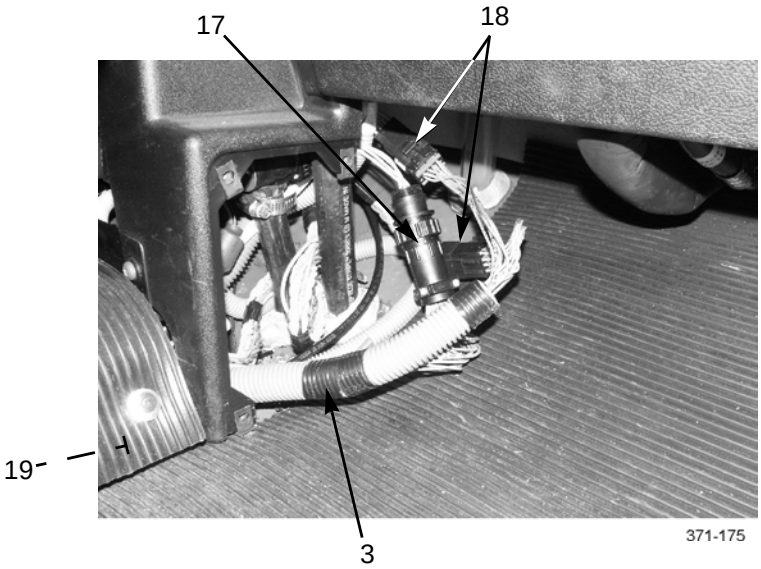

14. As required, remove conduit from transmission ECU wiring harness (3).

INSTALLATION

NOTE

Install new tiedown straps and electrical tape as required.

1. If removed, install conduit around transmission ECU wiring harness (3).
2. Position transmission ECU wiring harness (3) between points of connection.
3. Tie lacing wire or rope to branch of transmission ECU wiring harness (3) with three connectors (17 and 18). Pull wiring harness forward through transmission access tunnel (19).
4. Connect three transmission ECU wiring harness connectors (17 and 18) to wiring harness connectors.

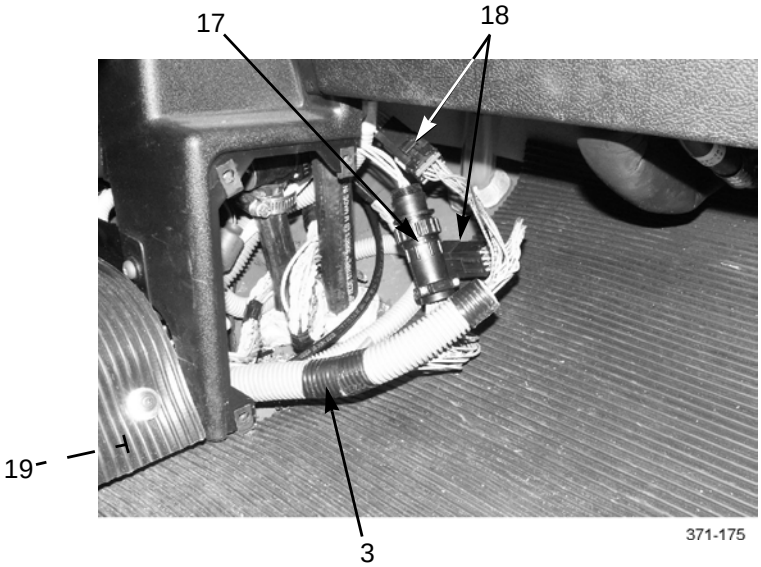

5. Install access cover (16) with three screws (15).

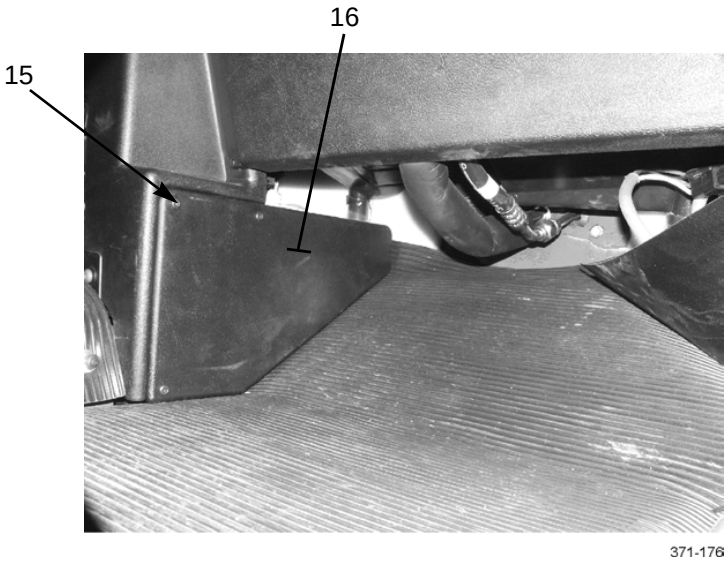

TRANSMISSION ELECTRONIC CONTROL UNIT (ECU) WIRING HARNESS REPLACEMENT (M915A3 NEW MODEL, M916A3, M917A2) - CONTINUED 0159 00

INSTALLATION - CONTINUED

6. At shift tower, connect transmission ECU wiring harness connector to shift selector connector (WP 0152 00 or WP 0153 00).
7. If removed, install transmission bus connector (13) at J1939 bus installation. Connect connector (14) to bus connector.
8. Connect transmission ECU wiring harness connector (12) to transmission bus connector (13).

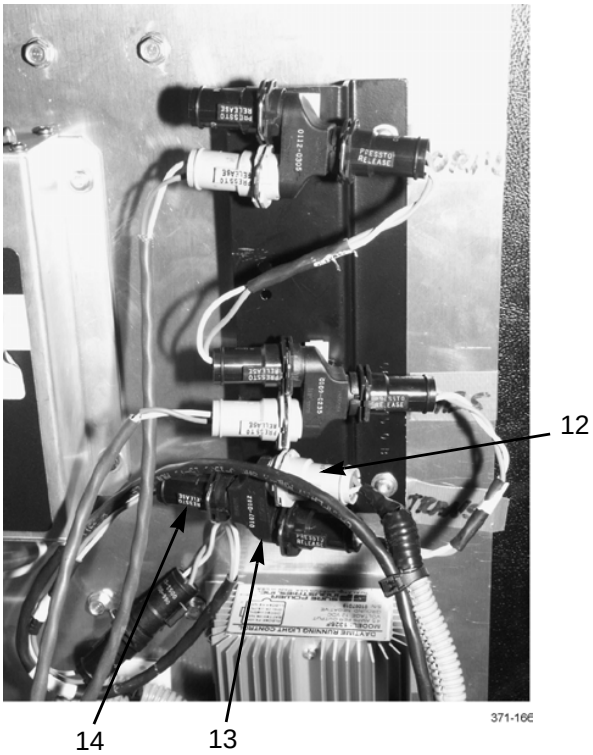

INSTALLATION - CONTINUED

NOTE

Ensure that connector o-ring is positioned on connector as connector is installed to cab floor.

9. Position connector (4) at hole in cab floor near driver side door. Secure connector with lockwasher (6) and nut (5).

10. Connect transmission wiring harness (7) to connector (4).

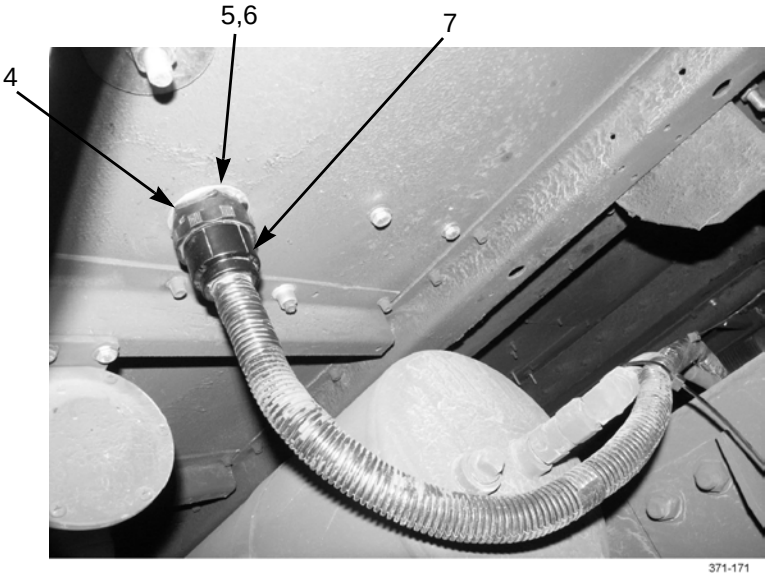

371-171

11. Connect three transmission ECU wiring harness connectors (2) to transmission ECU (1).

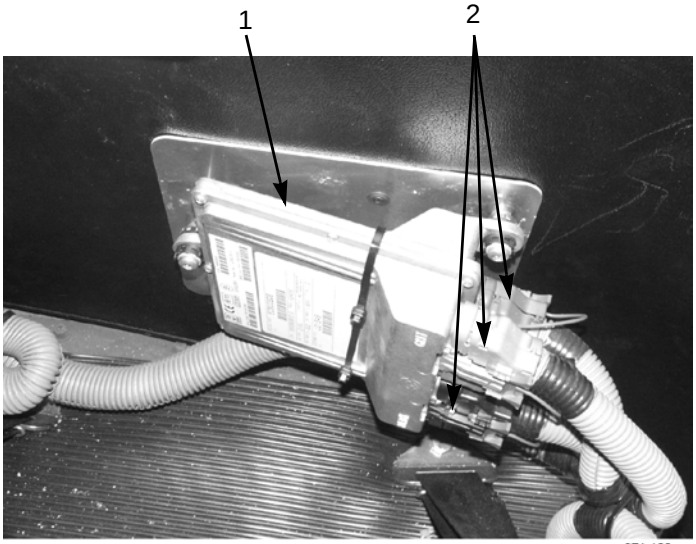

371-128

INSTALLATION - CONTINUED

12. At ECU installation behind passenger seat, install cover (8) on plate (9) with two washers (11) and screws (10).

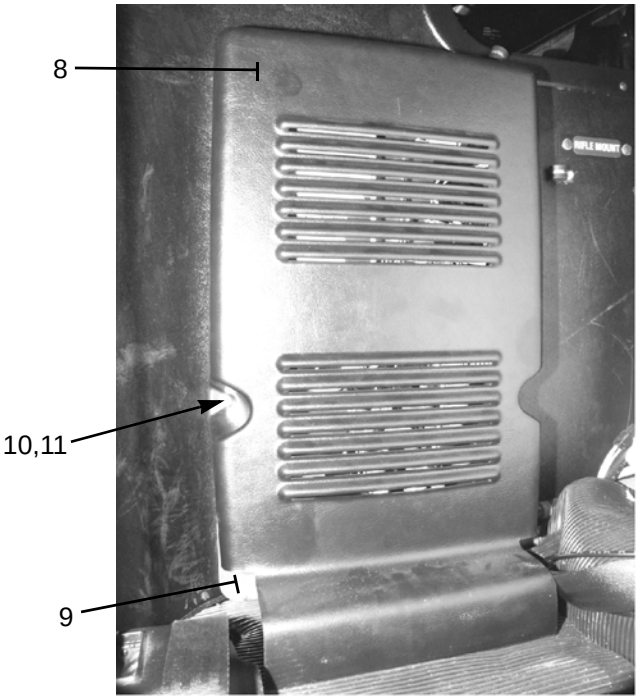

371-160

13. Install cab floor mats and insulation pads (WP 0263 00).

END OF WORK PACKAGE

TRANSMISSION SPEED SENSOR REPLACEMENT 0160 00

THIS WORK PACKAGE COVERS

Removal, Installation

INITIAL SETUP

Tools and Special Tools

Tool kit, general mechanic's (Item 50, WP 0306 00)

Materials/Parts

Oil, lubricating (Item 22, WP 0305 00)

Packing, preformed (P/N 29503383)

REMOVAL

1. Locate speed sensor to be replaced.
2. Remove bolt (4), retainer (3), sensor (2), and preformed packing (1) from transmission. Discard preformed packing.

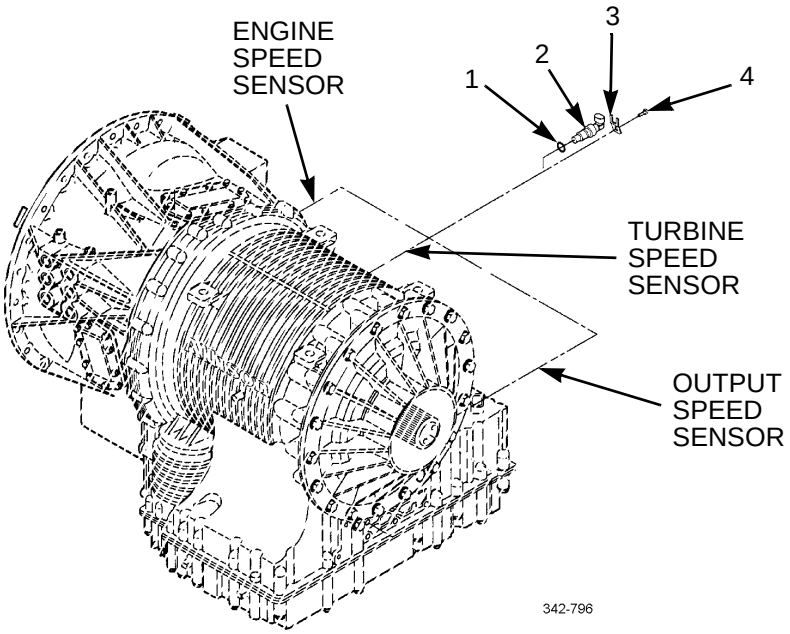

INSTALLATION

1. Lightly coat new preformed packing (1) with lubricating oil.
2. Install preformed packing (1) and speed sensor (2) on transmission with retainer (3) and bolt (4).

END OF WORK PACKAGE

TRANSMISSION OIL COOLER REPLACEMENT (M915A3 OLD MODEL) 0161 00

THIS WORK PACKAGE COVERS

Removal, Installation

INITIAL SETUP

Tools and Special Tools

Tool kit, general mechanic's (Item 50, WP 0306 00)

Materials/Parts

Nut, lock (P/N 23-09901-108) (3)

Nut, lock (P/N 45913/1-8CG5C)

Rags, wiping (Item 31, WP 0305 00)

Equipment Condition

Transmission oil cooler lines and fittings removed (WP 0155 00)

Coolant drained (WP 0046 00)

REMOVAL

WARNING

Spilled oil is very slippery. Wipe up any spilled fluid immediately. Failure to follow this warning could result in serious injury to personnel.

1. Remove locknut (4), washer (5), screw (1), washer (2), and oil sample valve (3). Set oil sample valve aside. Discard locknut.
2. Remove three locknuts (12), washers (13), screws (14), washers (15), and transmission oil cooler (8). Discard locknuts.
3. Remove three nuts (6), washers (7), cap screws (10), washers (11), and brackets (9).

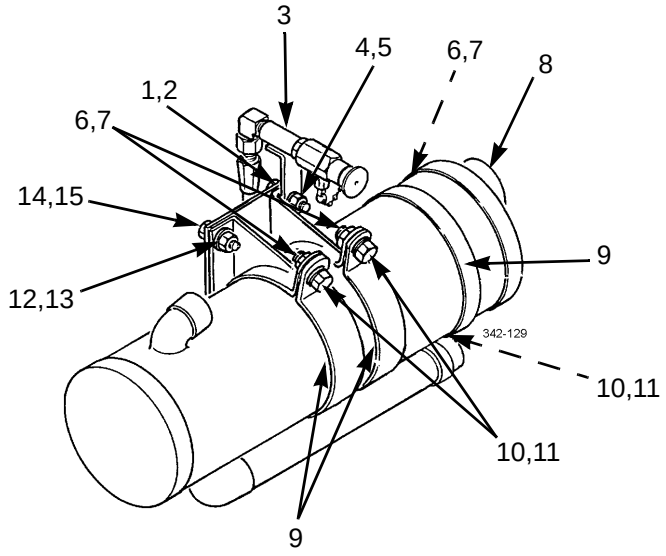

INSTALLATION

1. Install three brackets (9) with washers (11), cap screws (10), washers (7), and nuts (6).

WARNING

Spilled oil is very slippery. Wipe up any spilled fluid immediately. Failure to follow this warning could result in serious injury to personnel.

2. Install transmission oil cooler (8) with three washers (15), screws (14), washers (13), and new locknuts (12).
3. Install oil sample valve (3) with washer (2), screw (1), washer (5), and new locknut (4).

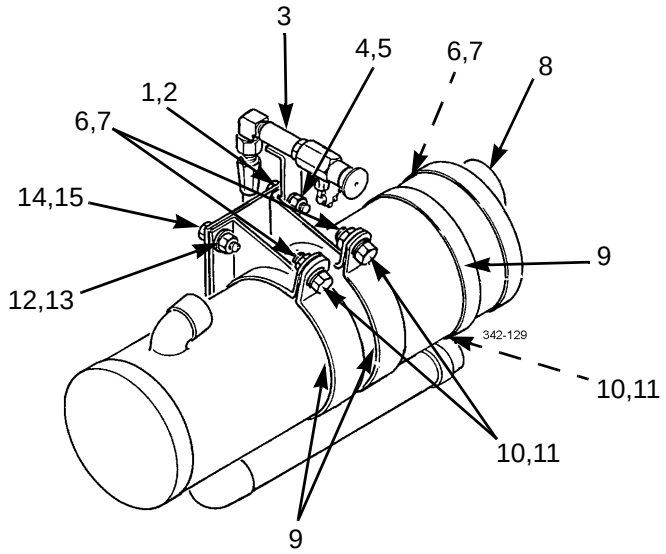

4. Install transmission oil cooler lines and fittings (WP 0155 00).
5. Fill radiator with coolant (WP 0046 00).

END OF WORK PACKAGE

TRANSMISSION OIL COOLER REPLACEMENT (M915A3 NEW MODEL, M916A3, M917A2) 0162 00

THIS WORK PACKAGE COVERS

Removal, Installation

INITIAL SETUP

Tools and Special Tools

Tool kit, general mechanic's (Item 50, WP 0306 00)

Materials/Parts

Rags, wiping (Item 31, WP 0305 00)

Equipment Conditions

Transmission oil cooler lines and fittings removed (WP 0155 00)

REMOVAL

WARNING

Spilled oil is very slippery. Wipe up any spilled fluid immediately. Failure to follow this warning could result in serious injury to personnel.

Remove three nuts (1), six washers (2), three bolts (3), and bracket (4) with oil cooler attached (5).

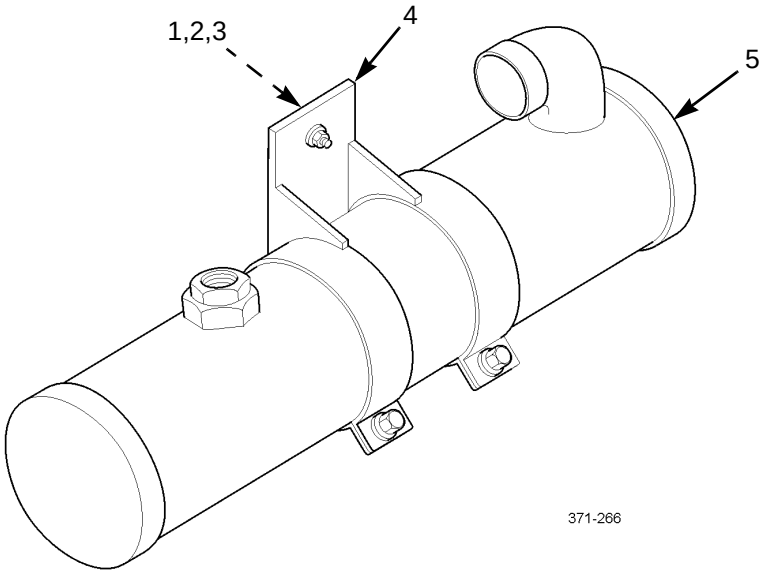

INSTALLATION

1. Install bracket (4) with oil cooler (5) attached with three bolts (3), six washers (2), and three nuts (1).
2. Install transmission oil cooler lines and fittings (WP 0155 00).
3. Start vehicle and check for leaks (TM 9-2320-302-10).

END OF WORK PACKAGE

TRANSMISSION BREATHER REPLACEMENT 0163 00

THIS WORK PACKAGE COVERS

Removal, Installation

INITIAL SETUP

Tools and Special Tools

Tool kit, general mechanic's (Item 50, WP 0306 00)

Equipment Condition

Transmission tunnel access cover removed (WP 0268 00)

REMOVAL

Remove transmission breather (1) from transmission (2).

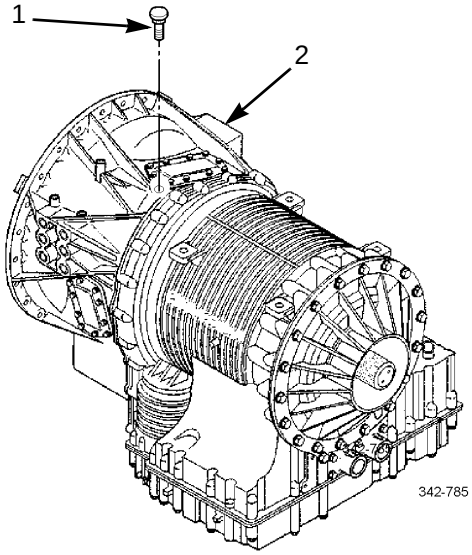

INSTALLATION

1. Install transmission breather (1) on transmission (2).
2. Install transmission tunnel access cover (WP 0268 00).

END OF WORK PACKAGE

TRANSFER CASE OIL TEMPERATURE SENDING UNIT AND BREATHER UNIT REPLACEMENT (M916A3, M917A2) 0164 00

THIS WORK PACKAGE COVERS

Oil Temperature Sending Unit:

Removal, Installation, Breather Replacement

INITIAL SETUP

Tools and Special Tools

Tool kit, general mechanic's (Item 50, WP 0306 00)

References

WP 0023 00

Equipment Conditions

Master battery switch in OFF position (TM 9-2320-302-10)

Transfer case oil drained (WP 0023 00)

OIL TEMPERATURE SENDING UNIT REMOVAL

1. Remove nut (2) and electrical lead (1) from sending unit (3).
2. Remove sending unit (3) and adapter (4) from transfer case (5).

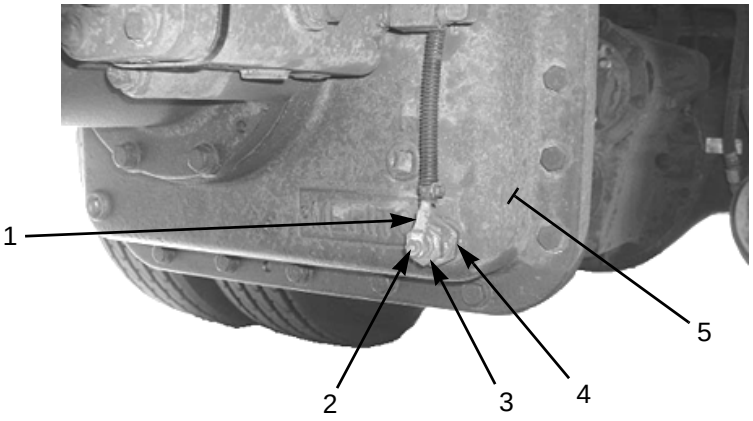

OIL TEMPERATURE SENDING UNIT INSTALLATION

1. Install adapter (4) and sending unit (3) on transfer case (5).
2. Install electrical lead (1) and nut (2) to sending unit (3).
3. Fill transfer case with oil (WP 0023 00).

BREATHER REPLACEMENT

1. Unscrew and remove breather (1) from transfer case (2).

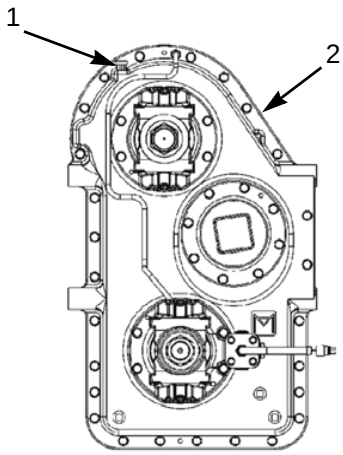

371-223

2. Install breather (1) in transfer case (2) and tighten.

END OF WORK PACKAGE

DRIVELINE REPLACEMENT (M915A3 OLD MODEL) 0165 00

THIS WORK PACKAGE COVERS

Main Driveline Removal, Inter-axle Driveline Removal, Main Driveline Installation, Inter-axle Driveline Installation

INITIAL SETUP

Tools and Special Tools

Tool kit, general mechanic's (Item 50, WP 0306 00)

Wrench, torque, 15-75 lb-ft (Item 57, WP 0306 00)

Wrench, torque, 50-250 lb-ft (Item 58, WP 0306 00)

Materials/Parts

Grease, GAA (Item 18, WP 0305 00)

Screw, lock (P/N185290) (8)

Personnel Required

Two

References

WP 0023 00

Equipment Condition

Vehicle wheels chocked

Parking brakes released (TM 9-2320-302-10)

MAIN DRIVELINE REMOVAL

WARNING

Driveline is heavy. Support end of driveline as bearing straps are removed to prevent driveline from falling. Failure to follow this warning may cause serious injury to personnel.

MAIN DRIVELINE REMOVAL - CONTINUED

NOTE

Perform following step at front end of main driveline.

1. Remove four screws (3) and two bearing straps (2) from universal joint of main driveline (1). Discard screws.

NOTE

Perform following step at rear end of main driveline.

2. Remove four screws (4) and two bearing straps (5) from universal joint of main driveline (1). Discard screws.
3. Remove main driveline (1) from vehicle.

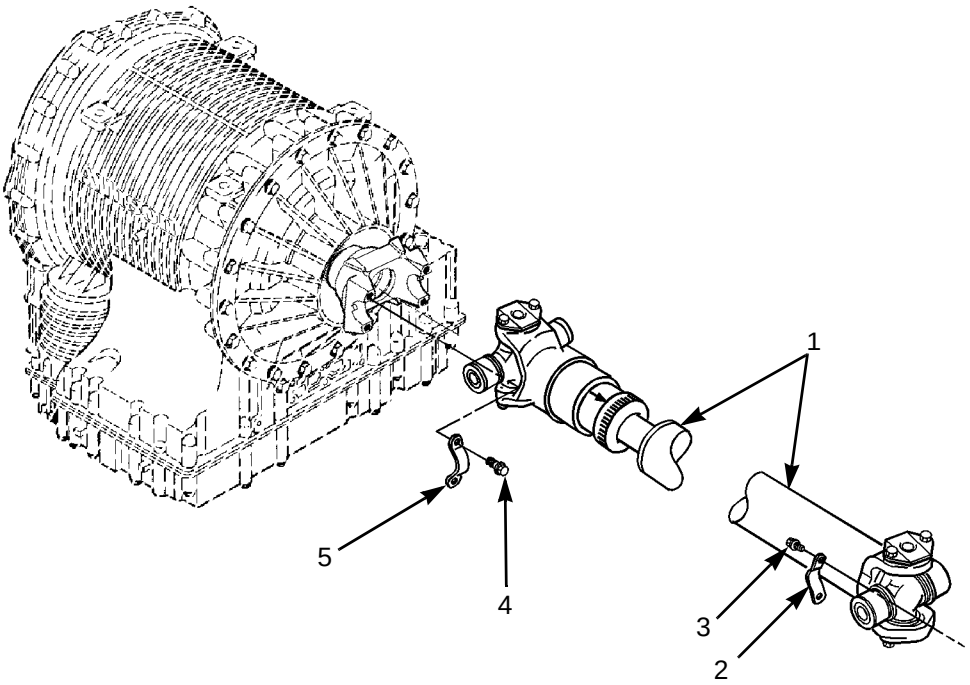

342-296

INTER-AXLE DRIVELINE REMOVAL

WARNING

Driveline is heavy. Support end of driveline as bearing straps are removed to prevent driveline from falling. Failure to follow this warning may cause serious injury to personnel.

INTER-AXLE DRIVELINE REMOVAL - CONTINUED

NOTE

Perform following steps at front end of inter-axle driveline.

1. Remove two screws (8) from each of two bearing caps (7). Discard screws.
2. Remove two bearing caps (7) from universal joint of inter-axle driveline (6).

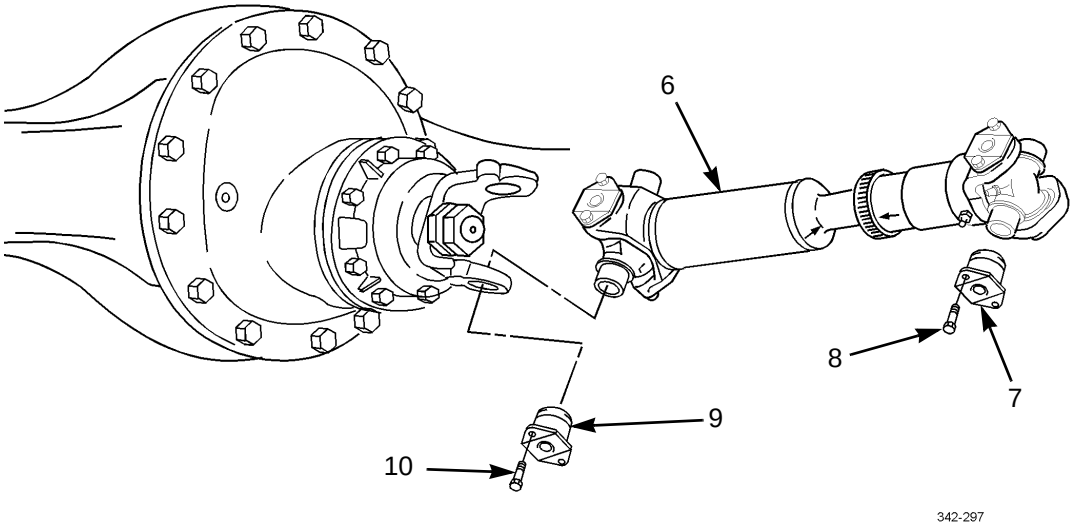

NOTE

Perform following steps at rear end of inter-axle driveline.

3. Remove two screws (10) from each of two bearing caps (9). Discard screws.
4. Remove two bearing caps (9) from universal joint of inter-axle driveline (6).
5. Remove inter-axle driveline (6) from vehicle.

MAIN DRIVELINE INSTALLATION

NOTE

Perform following steps at rear end of main driveline.

1. Position main driveline (1) to vehicle.
2. Install two bearings straps (5) and four new screws (4) to universal joint of main driveline (1). Tighten screws to 125 lb-ft (170 Nm).

NOTE

Perform following step at front end of main driveline.

3. Install two bearing straps (2) and four new screws (3) to universal joint of main driveline (1). Tighten screws to 125 lb-ft (170 Nm).
4. Lubricate driveline (WP 0023 00).

INTER-AXLE DRIVELINE INSTALLATION

NOTE

Perform following steps at rear end of inter-axle driveline.

1. Position inter-axle driveline (6) to vehicle and install two bearing caps (9).
2. Install two new screws (10) to each of two bearing caps (9). Tighten screws to 36 lb-ft (49 Nm).

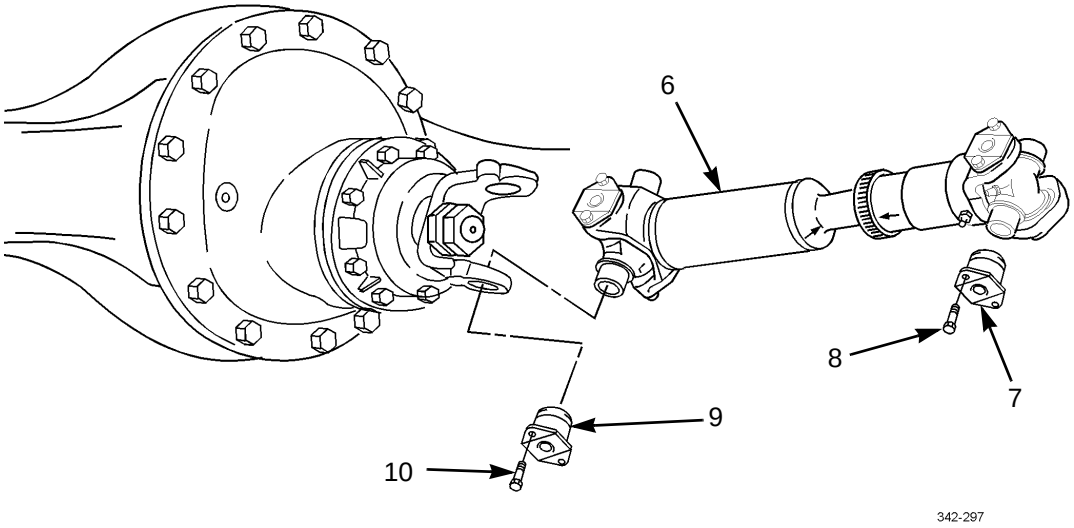

NOTE

Perform following steps at front end of inter-axle driveline.

3. Position inter-axle driveline (6) to vehicle and install two bearing caps (7).
4. Install two new screws (8) to each of two bearing caps (7). Tighten screws to 36 lb-ft (49 Nm).
5. Lubricate driveline (WP 0023 00).

END OF WORK PACKAGE

DRIVELINE MAINTENANCE (M915A3 NEW MODEL, M916A3, M917A2) 0166 00

THIS WORK PACKAGE COVERS

Driveline Removal, Driveline Installation, Driveline Repair

INITIAL SETUP

Tools and Special Tools

Tool kit, general mechanic's (Item 50, WP 0306 00)

Wrench, torque, 50-250 lb-ft (Item 58, WP 0306 00)

Materials/Parts

Screw, lock (P/N 185290) (8)

Retainer, bearing (P/N 6-5-70-89) (4)

Personnel Required

Two

References

WP 0023 00

Equipment Condition

Vehicle wheels blocked

Parking brakes released (TM 9-2320-302-10)

WARNING

Use extreme caution when handling heavy parts. Provide adequate support and use assistance during procedure. Ensure that any lifting device used is in good condition and of suitable capacity. Keep clear of heavy parts supported only by lifting device. Failure to follow this warning may result in injury or death to personnel.

NOTE

All driveline yoke connections are the same. Front axle-to-intermediate driveline is illustrated.

DRIVELINE REMOVAL

1. Make matchmarks at each end of driveline and adjoining components to aid in installation.
2. Support driveline (2).
3. For front axle disconnection of driveline (2), remove eight bolts (6), washers (7), and nuts (8) from flange yoke (1).
4. For each yoke disconnection of driveline (2), remove four screws (5) and two bearing retainers (4). Discard screws and bearing retainers.
5. Pry bearing (3) from yoke.
6. Remove driveline (2) from vehicle.

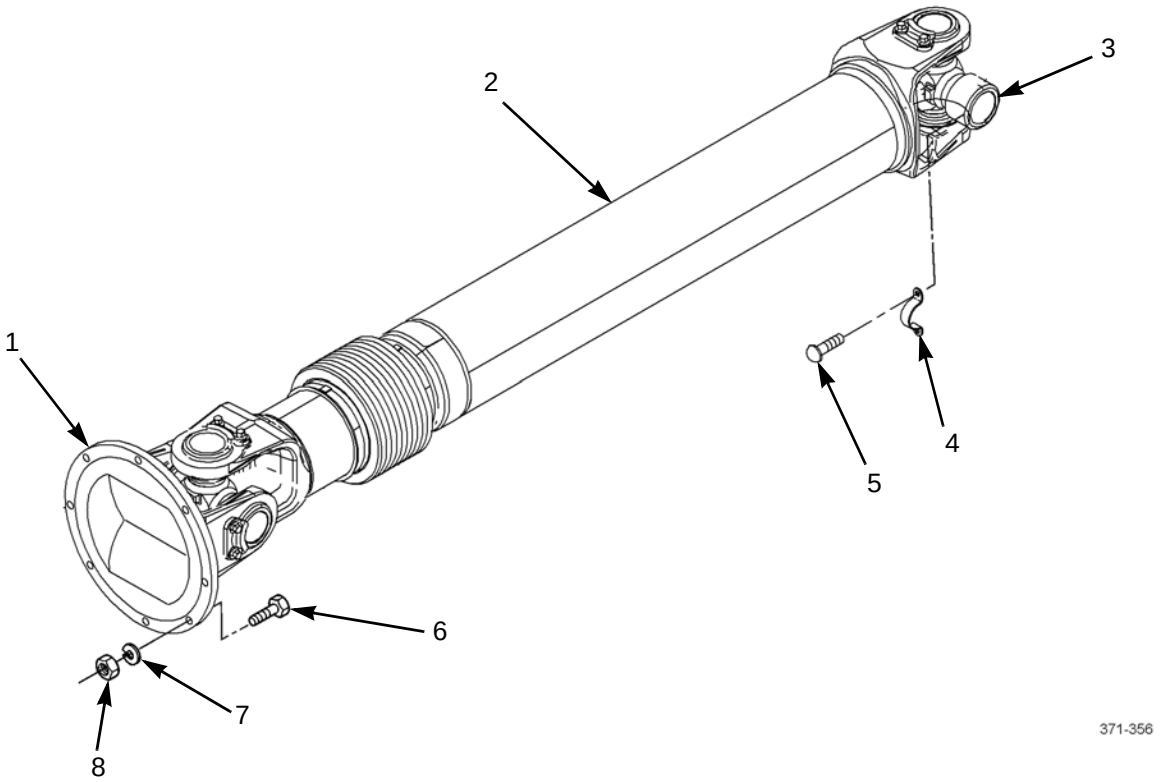

DRIVELINE INSTALLATION

1. Position driveline (2) in accordance with matchmarks made during removal.
2. For each yoke connection, install two bearing retainers (4) and four new screws (5) securing bearing (3) to yoke. Tighten screws to 28 lb-ft (38 Nm).
3. For front axle connection of driveline (2), install eight bolts (6), washers (7), and nuts (8). Tighten bolts to 11-14 lb-ft (15-19 Nm).
4. Lubricate driveline (WP 0023 00).

DRIVELINE REPAIR

NOTE

Perform steps 1 through 4 to replace bearing and steps 5 through 11 to replace bellows.

1. Remove four screws (10) and two retainers (9) from yoke (11).
2. Remove bearing (12) from yoke (11).
3. Install bearing (12) into yoke (11).
4. Install two retainers (9) and four screws (10) on yoke (11). Tighten screws to 100-120 lb-ft (135-160 Nm).
5. Make matchmarks at each end of driveline and adjoining components to aid in installation.
6. Loosen clamp (14) at each end of bellows (15).
7. Remove yoke (16) from tube (13).
8. Remove bellows (15) from tube (13).
9. Place clamp (14) on each end of bellows (15) and slide bellows onto tube (13).
10. Position yoke (16) through bellows (15) and into tube (13) in accordance with matchmarks made during removal.
11. Tighten clamp (14) at each end of bellows (15).

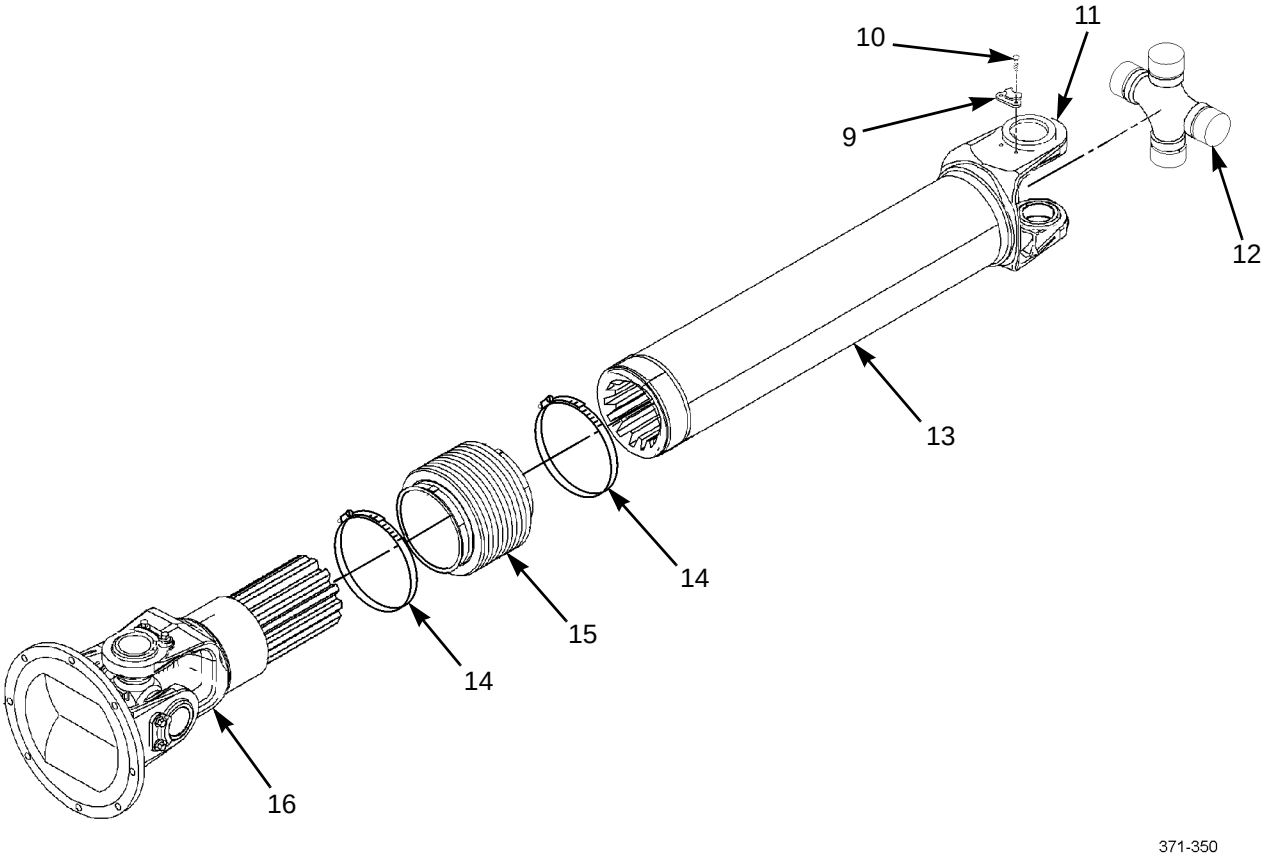

END OF WORK PACKAGE

DRIVELINE U-JOINTS AND BEARINGS REPLACEMENT (M915A3 OLD MODEL) 0167 00

THIS WORK PACKAGE COVERS

Main Driveline U-joints Removal, Inter-Axle Driveline U-joints Removal, Main Driveline U-joints Installation, Inter-Axle Driveline U-joints Installation

INITIAL SETUP

Tools and Special Tools

Tool kit, general mechanic's (Item 50, WP 0306 00)

Wrench, torque, 15-75 lb-ft (Item 57, WP 0306 00)

Materials/Parts

Grease, GAA (Item 18, WP 0305 00)

Screw, lock (P/N 6-73-209) (4)

Equipment Condition

Drivelines removed from vehicle (WP 0165 00)

MAIN DRIVELINE U-JOINTS REMOVAL

NOTE

Perform following steps at front end of main driveline.

1. Remove retaining wire (1) from groove of two bearings (2).
2. Remove two bearings (2) from universal joint (7).
3. Remove two screws (5) from each of two bearing caps (6). Discard screws.
4. Remove two bearing caps (6) and universal joint (7) from yoke (3) of main driveline (4).
5. Remove two grease fittings (8) from universal joint (7).

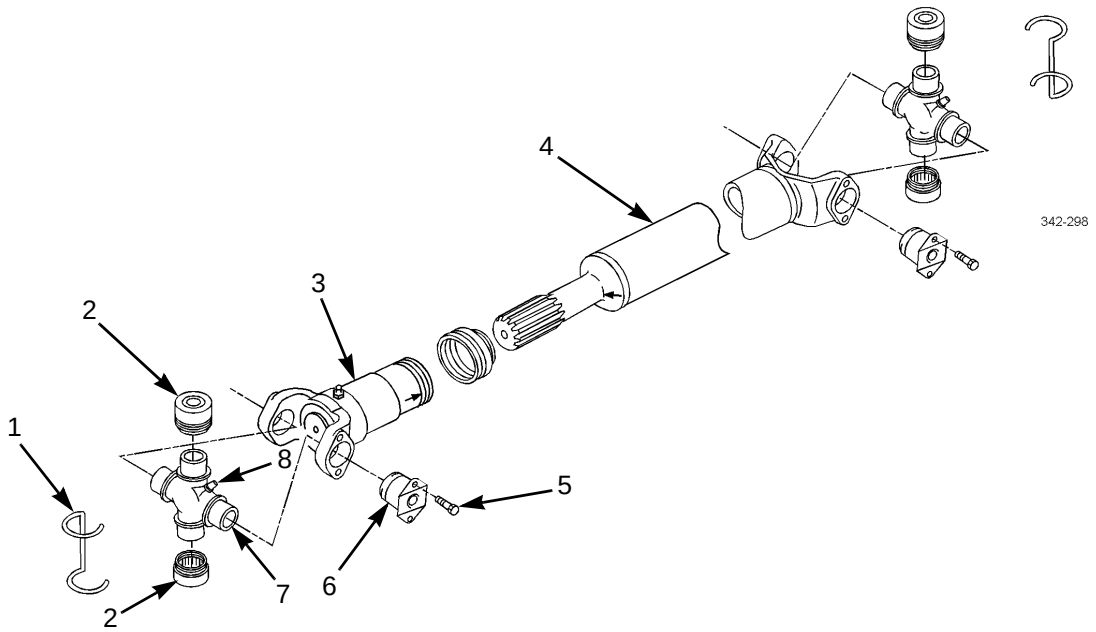

MAIN DRIVELINE U-JOINTS REMOVAL - CONTINUED

NOTE

Note matchmarks on each half of main driveline for installation. Scribe or paint matchmarks on driveline if matchmarks are missing.

6. Remove dust seal (10) and yoke (3) from main driveline (4).
7. Remove grease fitting (9) from yoke (3).

NOTE

Perform following steps at rear end of main driveline.

8. Remove retaining wire (13) from groove of two bearings (11).
9. Remove two bearings (11) from universal joint (14).
10. Remove two screws (15) from each of two bearing caps (16). Discard screws.
11. Remove two bearing caps (16) and universal joint (14) from main driveline (4).
12. Remove two grease fittings (12) from universal joint (14).

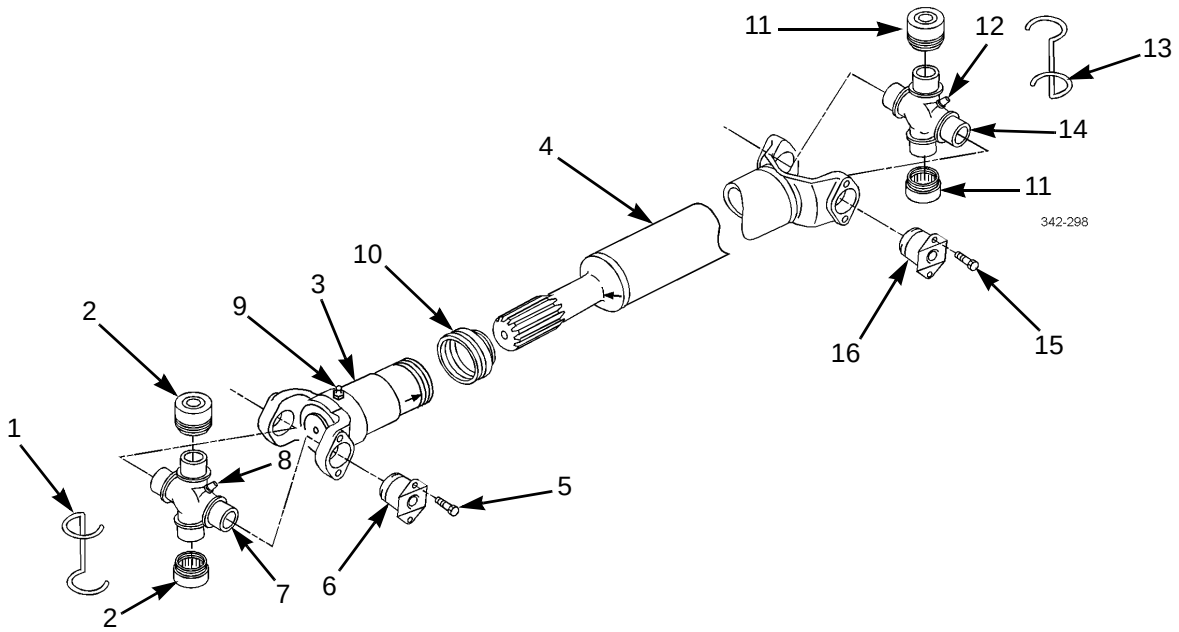

INTER-AXLE DRIVELINE U-JOINTS REMOVAL

NOTE

Perform the following steps at front end of inter-axle driveline.

1. Remove two screws (5) from each of two bearing caps (6). Discard screws.
2. Remove two bearing caps (6) and universal joint (7) from yoke (3) of inter-axle driveline (4).

INTER-AXLE DRIVELINE U-JOINTS REMOVAL - CONTINUED

3. Remove two grease fittings (8) from universal joint (7).

NOTE

Note matchmarks on each half of inter-axle driveline for installation. Scribe or paint matchmarks on driveline if matchmarks are missing.

4. Remove dust seal (10) and yoke (3) from inter-axle driveline (4).
5. Remove grease fitting (9) from yoke (3).

NOTE

Perform the following steps at rear end of inter-axle driveline.

6. Remove two screws (15) from each of two bearing caps (16). Discard screws.
7. Remove two bearing caps (16) and universal joint (14) from inter-axle driveline (4).
8. Remove two grease fittings (12) from universal joint (14).

MAIN DRIVELINE U-JOINTS INSTALLATION

NOTE

Perform the following steps at rear end of main driveline.

1. Install two grease fittings (12) on universal joint (14).
2. Position universal joint (14) and two bearing caps (16) to main driveline (4).
3. Install two new screws (15) on each of two bearing caps (16). Tighten screws to 36 lb-ft (49 Nm).
4. Install two bearings (11) on universal joint (14).
5. Install retaining wire (13) in groove of two bearings (11).
6. Lubricate universal joint (14) (WP 0023 00).

NOTE

Perform the following steps at front end of main driveline.

7. Install grease fitting (9) on yoke (3).

NOTE

Align matchmarks on each half of main driveline.

8. Install dust seal (10) and yoke (3) on main driveline (4). Tighten dust seal.
9. Install two grease fittings (8) on universal joint (7).
10. Position universal joint (7) and two bearing caps (6) on main driveline (4).
11. Install two new screws (5) on each of two bearing caps (6). Tighten screws to 36 lb-ft (49 Nm).
12. Install two bearings (2) on universal joint (7).
13. Install retaining wire (1) in groove of two bearings (2).
14. Lubricate yoke (3) and universal joint (7) (WP 0023 00).
15. Install main driveline (WP 0165 00).

INTER-AXLE DRIVELINE U-JOINTS INSTALLATION

NOTE

Perform the following steps at rear end of inter-axle driveline.

1. Install two grease fittings (12) on universal joint (14).
2. Position universal joint (14) and two bearing caps (16) on inter-axle driveline (4).
3. Install two new screws (15) on each of two bearings caps (16). Tighten screws to 36 lb-ft (49 Nm).
4. Lubricate universal joint (14) (WP 0023 00).
5. Install grease fitting (9) on yoke (3).

NOTE

Align matchmarks on each half of inter-axle driveline.

6. Install dust seal (10) and yoke (3) on inter-axle driveline (4). Tighten dust seal.

NOTE

Perform the following steps at front end of inter-axle driveline.

7. Install two grease fittings (8) to universal joint (7).
8. Position universal joint (7) and two bearing caps (6) on yoke (3) of inter-axle driveline (4).
9. Install two new screws (5) on each of two bearing caps (6). Tighten screws to 36 lb-ft (19 Nm).
10. Lubricate yoke (3) and universal joint (7) (WP 0023 00).
11. Install inter-axle driveline (WP 0165 00).

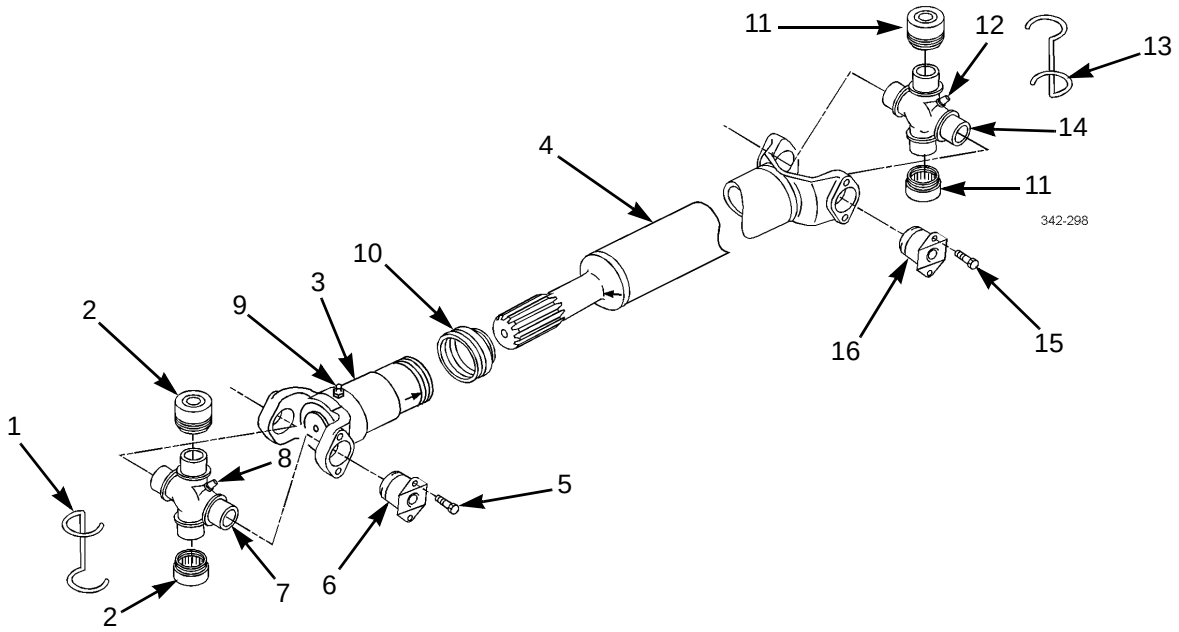

END OF WORK PACKAGE

FRONT AXLE TOE-IN ALIGNMENT 0168 00

THIS WORK PACKAGE COVERS

Alignment Check, Adjustment

INITIAL SETUP

Tools and Special Tools

Tool kit, general mechanic's (Item 50, WP 0306 00)

Jack, hydraulic, hand (Item 24, WP 0306 00)

Tape, measuring, 50 feet (Item 45, WP 0306 00)

Trestle, hoist, portable (2) (Item 52, WP 0306 00)

Wrench, torque, 15-75 lb-ft (Item 57, WP 0306 00)

Materials/Parts

Paint, white (Item 30, WP 0305 00)

Personnel Required

Two

References

TM 9-2320-302-10

ALIGNMENT CHECK

1. Block rear wheels and raise front end of vehicle so that front tires can be rotated. Support front of vehicle on two trestles.
2. Slowly rotate front tire and whiten center of tire around complete circumference using spray paint. Repeat for opposite tire.
3. Rotate tire and scribe line (1) around complete circumference near center so that line is visible in whitened area. Repeat for opposite tire.

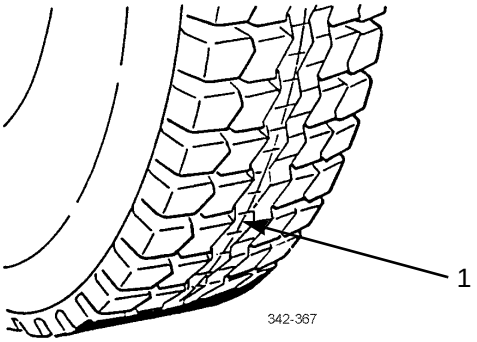

4. Lower vehicle and remove trestles.
5. Remove chocks. Back up vehicle a few feet, then drive forward approximately 10 feet.
6. Place transmission in neutral and set parking brake (TM 9-2320-302-10).
7. At front of tires, use tape measure held at axle height to measure distance between scribed lines (1) and front of each tire. Record measurement to nearest 1/32 in.
8. At rear of tires, use tape measure held at axle height to measure distance between scribed lines (1) on rear of each tire. Record measurement to nearest 1/32 in.

ALIGNMENT CHECK - CONTINUED

9. Measurement at front of tires must be 1/16 inch or less than rear measurement for proper toe-in alignment. If measurement is not as specified, perform alignment procedure.

ADJUSTMENT

NOTE

Perform steps 1 through 4 to adjust toe-in alignment.

1. Loosen screws (4) at clamps (3) on each end of tie rod (2).
2. Rotate tie rod (2) toward front of vehicle to increase toe-in or rotate tie rod toward rear of vehicle to decrease toe-in.
3. Tighten screws (4) to 40-55 lb-ft (54-75 Nm).

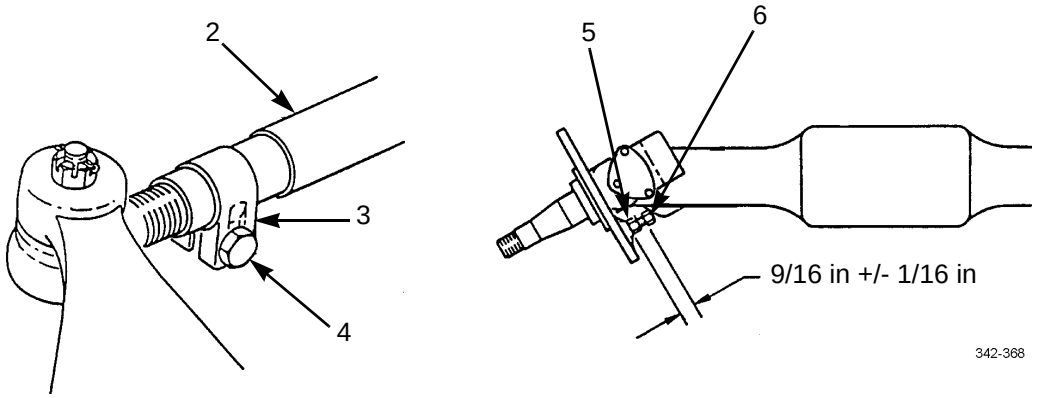

4. Repeat alignment check procedure.

NOTE

- Perform steps 5 through 7 to adjust turn stop bolts.
- Steps 5 through 7 are the same for both sides.

5. Measure length of stop bolt (6). Length must be 9/16 in +/- 1/16 in (14 mm +/- 1.6 mm).
6. If measurement from step 5 is not within tolerance, loosen locknut (5) and adjust stop bolt (6) to required length.
7. Tighten locknut (5) to 28 lb-ft (38 Nm).

END OF WORK PACKAGE

FRONT AXLE STOP CUSHION REPLACEMENT 0169 00

THIS WORK PACKAGE COVERS

Removal, Installation

INITIAL SETUP

Tools and Special Tools

Tool kit, general mechanic's (Item 50, WP 0306 00)

Materials/Parts

Adhesive (Item 2, WP 0305 00)

NOTE

Each of two front axle stop cushions are replaced the same way.

REMOVAL

Remove stop cushion (1) from front axle stop (2).

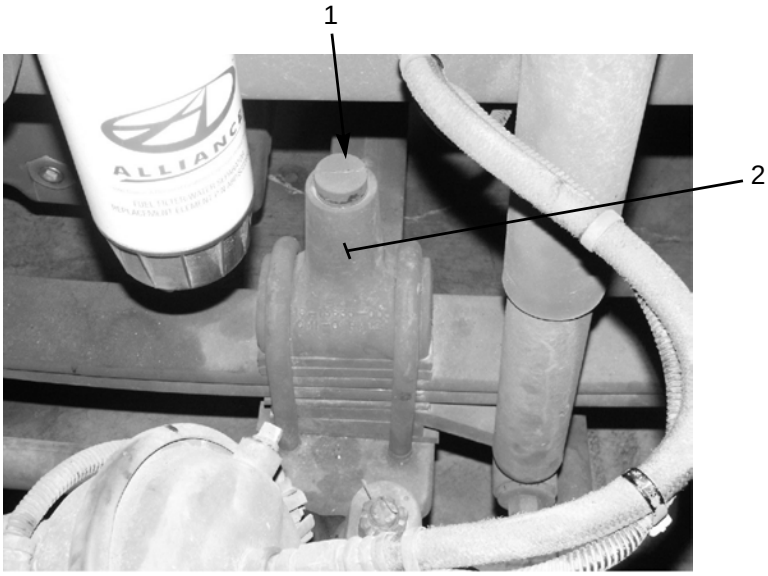

371-248

INSTALLATION

1. Apply adhesive to inside diameter of front axle stop (2).
2. Install stop cushion (1) in front axle stop (2).

END OF WORK PACKAGE

REAR AXLE BREATHER REPLACEMENT 0170 00

THIS WORK PACKAGE COVERS

Removal, Installation

INITIAL SETUP

Tools and Special Tools

Tool kit, general mechanic's (Item 50, WP 0306 00)

Materials/Parts

Compound, sealing, pipe (Item 13, WP 0305 00)

Equipment Condition

Vehicle wheels chocked

NOTE

Although mounted on different sides of each axle, rear axle breathers are replaced the same way.

REMOVAL

Remove rear axle breather (1) from rear axle (2).

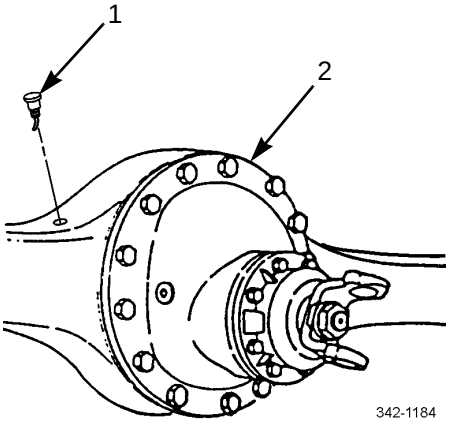

INSTALLATION


WARNINGS

Adhesives and sealing compounds can burn easily, can give off harmful vapors, and are harmful to skin and clothing. To avoid injury or death, keep away from open fire and use in a well-ventilated area. If adhesives or sealing compound contacts skin or clothing, wash immediately with soap and water.

1. Lightly coat threads of rear axle breather (1) with pipe sealing compound.

NOTE

Position of rear axle breather is important. Install rear axle breather so that mark and tube of breather face AWAY from differential.

2. Install rear axle breather (1) on rear axle (2).

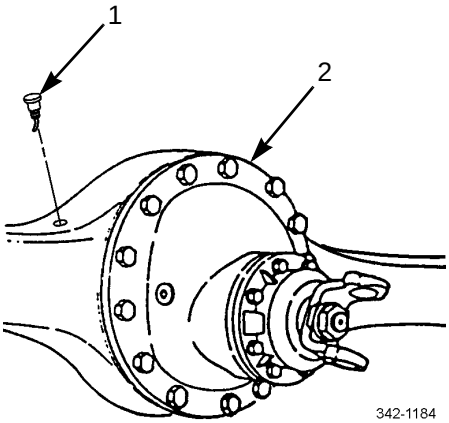

END OF WORK PACKAGE

AIR TANK AUTOMATIC DRAIN VALVE REPLACEMENT (M915A3 NEW MODEL, M916A3, M917A2) 0171 00

THIS WORK PACKAGE COVERS

Removal, Installation

INITIAL SETUP

Tools and Special Tools

Tool kit, general mechanic's (Item 50, WP 0306 00)

Materials/Parts

Compound, pipe sealing (Item 13, WP 0305 00)

References

TM 9-2320-302-10

Equipment Conditions

Air system drained (TM 9-2320-302-10)

NOTE

There are four automatic drain valves, one per air tank.

REMOVAL

1. Press rubber pin (4) on drain valve (1) to release any residual air from tank.
2. Remove drain valve (1) from air tank (3).
3. Remove adapter (2) from drain valve (1).

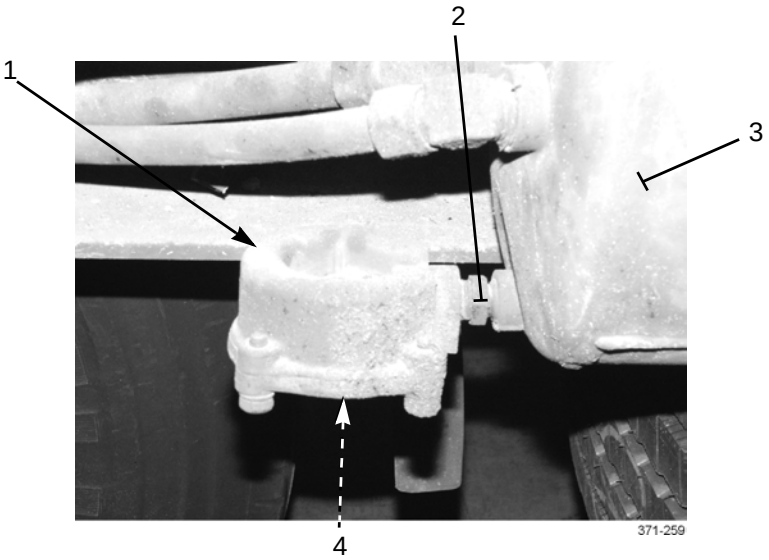

INSTALLATION


WARNING

Adhesives and sealing compounds can burn easily, can give off harmful vapors, and are harmful to skin and clothing. To avoid injury or death, keep away from open fire and use in a well-ventilated area. If adhesive or sealing compound contacts skin or clothing, wash immediately with soap and water.

4. Apply pipe sealing compound to threads of adapter (2).
5. Install adapter (2) on drain valve (1).
6. Install drain valve (1) on air tank (3).

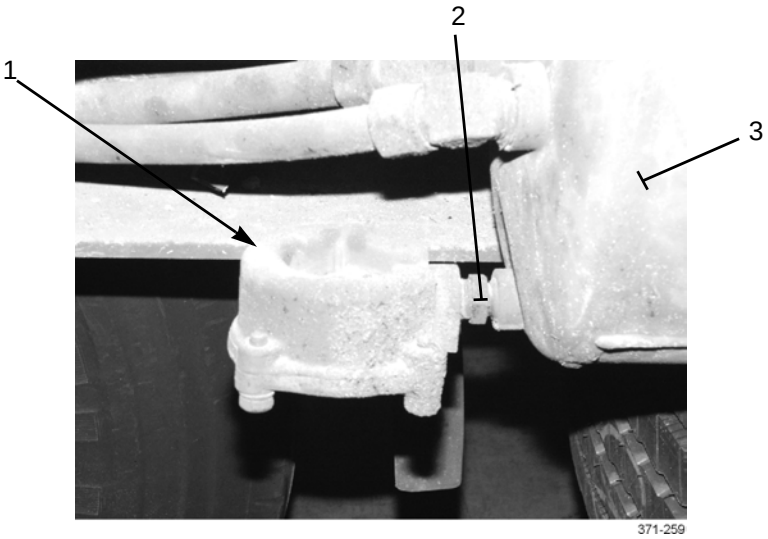

7. Start vehicle and check air system (TM 9-2320-302-10).

END OF WORK PACKAGE

BRAKE PEDAL REPLACEMENT 0172 00

THIS WORK PACKAGE COVERS

Removal, Installation

INITIAL SETUP

Tools and Special Tools

Tool kit, general mechanic's (Item 50, WP 0306 00)

Materials/Parts

Straps, tiedown (Item 33, WP 0305 00)

Pin, cotter (P/N K-500-PC-0001)

REMOVAL

1. Remove three screws (1) and cover (2).

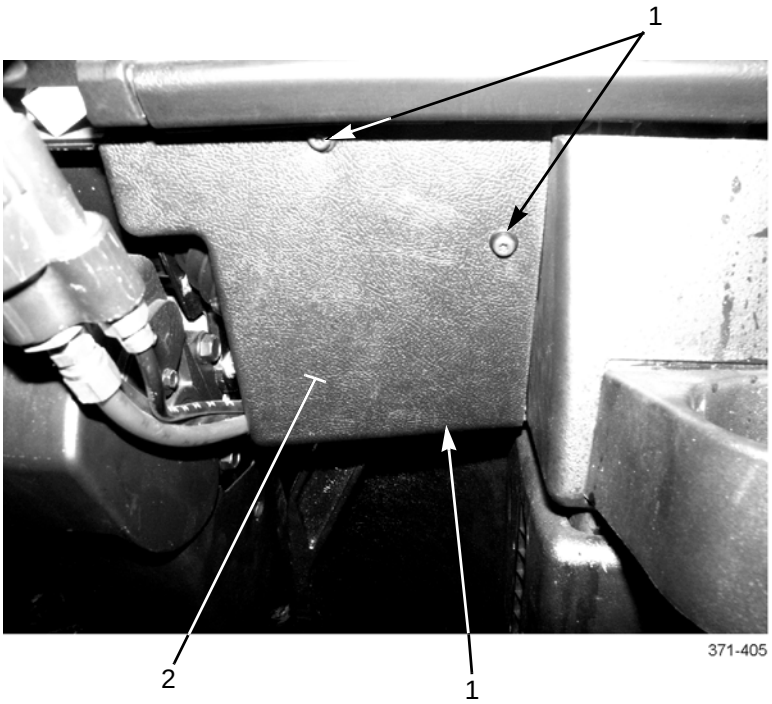

BRAKE PEDAL REPLACEMENT - CONTINUED 0172 00

REMOVAL - CONTINUED

2. Remove tiedown strap (3) and disconnect defroster hose (4). Discard tiedown strap.
3. Remove two screws (13), washers (14), bracket (10), and spring (9).
4. Remove four screws (6), cap (7), and brake pedal (11).
5. Remove cotter pin (15), straight pin (5), and clevis (8) from brake pedal (11). Discard cotter pin.
6. Remove two bearings (12) from cap (7).

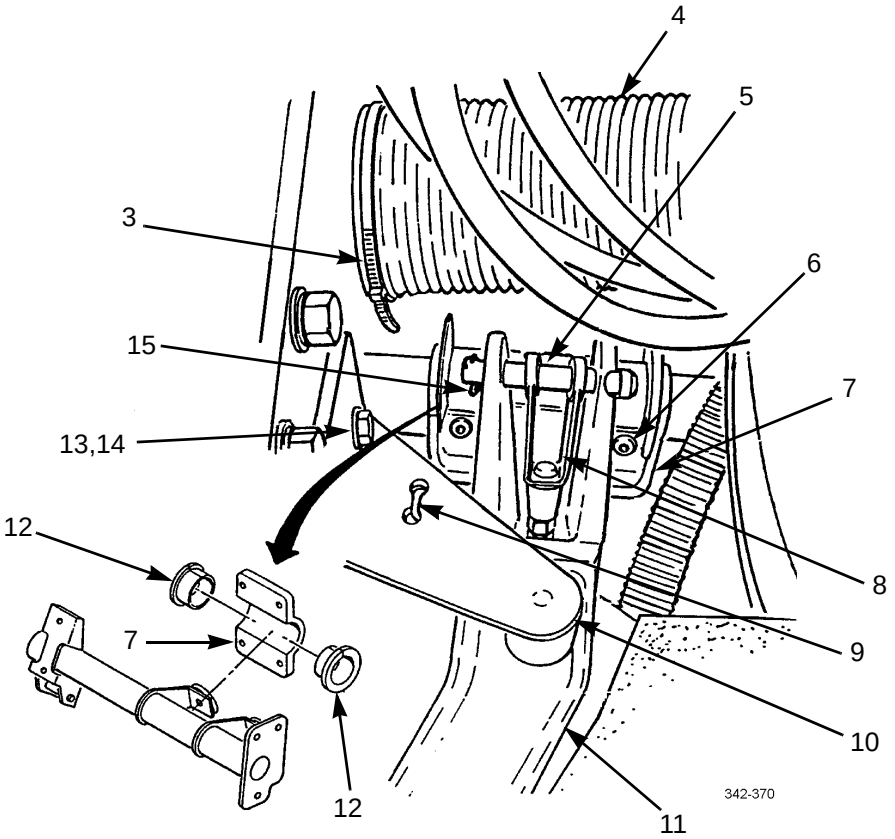

INSTALLATION

1. Install two bearings (12) on cap (7).
2. Install clevis (8) on brake pedal (11) with straight pin (5) and new cotter pin (16).
3. Install brake pedal (11) and cap (7) with four screws (6).
4. Install spring (9) and bracket (10) with two washers (14) and screws (13).
5. Connect defroster hose (4) and install new tiedown strap (3).
6. Install three screws (1) and cover (2).

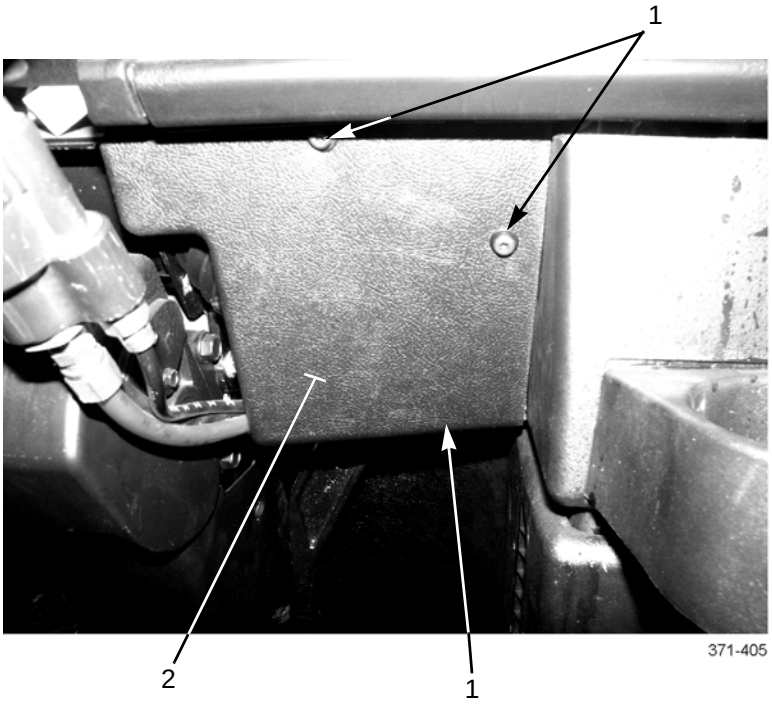

END OF WORK PACKAGE

FRONT BRAKESHOE REPLACEMENT (M915A3) 0173 00

THIS WORK PACKAGE COVERS

Removal, Cleaning and Inspection, Installation

INITIAL SETUP

Tools and Special Tools

Tool kit, general mechanic's (Item 50, WP 0306 00)

Materials/Parts

Compound, antiseize (Item 9, WP 0305 00)

Equipment Condition

Front hub and drum removed (WP 0207 00)

References

WP 0299 00

REMOVAL

1. Lift upper brakeshoe (2) away from s-cam (8) and remove upper cam roller (9).
2. Push lower brakeshoe (6) away from s-cam (8) and remove lower cam roller (7).
3. Remove release spring (1) from upper and lower brakeshoes (2 and 6).
4. Grasp upper and lower brakeshoes (2 and 6) and pull to open position. Remove two brakeshoes and retaining spring (4) from two spider anchor pins (3 and 5).
5. Remove retaining spring (4) from upper and lower brakeshoes (2 and 6).

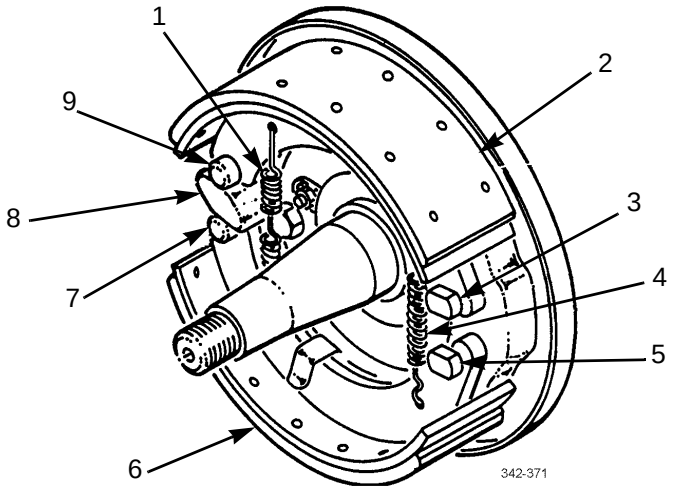

CLEANING AND INSPECTION

1. Clean front brakeshoes and components in accordance with WP 0299 00.
2. Measure brake lining thickness. Thickness must be NO LESS than 1/4 in (6.4 mm). If brake lining is less than 1/4 in (6.4 mm), replace brakeshoes.
3. Measure clearance between top of brake lining and top of all rivet heads. Clearance must be a minimum of 1/32 in (0.8 mm). If clearance is less than 1/32 in (0.8 mm), replace brakeshoes.
4. Inspect remaining brakeshoe parts in accordance with WP 0299 00.

INSTALLATION

WARNING

Brakeshoe linings and inside drum friction surface must be free of all oil/grease and other contaminants prior to assembly to ensure maximum braking capability. Oil/grease and other contaminants may compromise braking that could lead to a serious accident resulting in injury and/or death.

1. Apply a thin film of antiseize compound to contact points (10, 11, 12, and 13), two spider anchor pins (3 and 5), and small diameter of upper and lower cam rollers (7 and 9).
2. Install retaining spring (4) on each brakeshoe (2 and 6).
3. Install upper and lower brakeshoes (2 and 6) on two spider anchor pins (3 and 5).
4. Install release spring (1) on upper and lower brakeshoes (2 and 6).
5. Install upper cam roller (9) between upper brakeshoe (2) and s-cam (8).
6. Install lower cam roller (7) between lower brakeshoe (6) and s-cam (8).

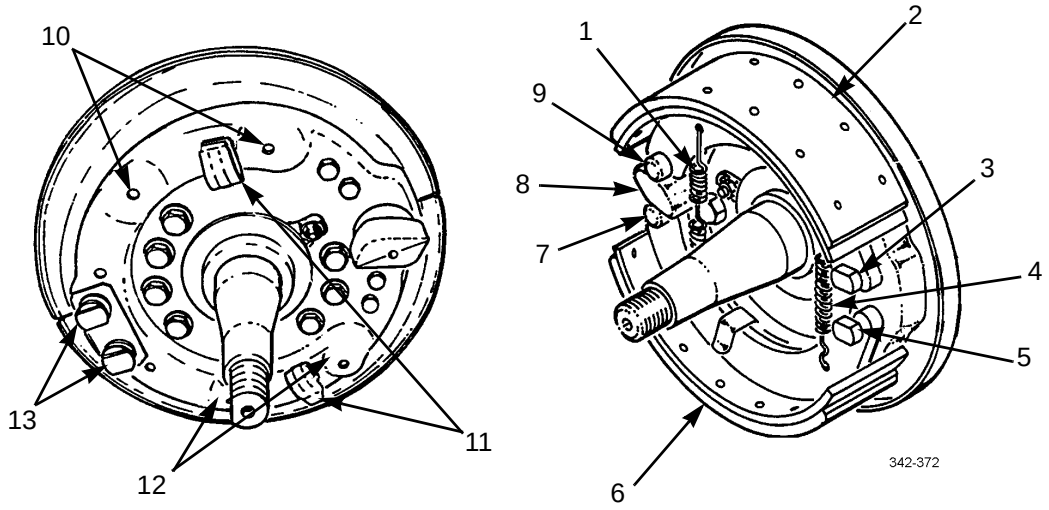

7. Install front hub and drum (WP 0207 00).

END OF WORK PACKAGE

FRONT BRAKESHOE REPLACEMENT (M916A3, M917A2) 0174 00

THIS WORK PACKAGE COVER

Removal, Installation

INITIAL SETUP

Tools and Special Equipment

Tool kit, general mechanic's (Item 50, WP 0306 00)

Personnel Required

Two

References

WP 0180 00

Equipment Condition

Front hub drum, seals, and bearings removed (WP 0208 00)

REMOVAL

1. Pry upper brakeshoe (1) away from cam (4).
2. Remove two cam roller pins (2) and two cam rollers (3).
3. Remove release spring (5) and let lower brakeshoe (6) drop down.
4. Unhook two retaining springs (7) and remove lower brakeshoe (6) from brake spider (8).
5. Remove upper brakeshoe (1).

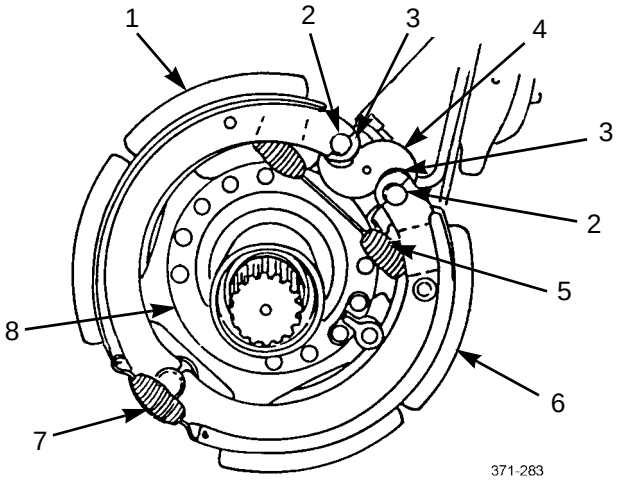

INSTALLATION

WARNING

Brakeshoe linings and inside drum friction surface must be free of all oil/grease and other contaminants prior to assembly to ensure maximum braking capability. Oil/grease and other contaminants may compromise braking that could lead to a serious accident resulting in injury and/or death.

1. Install upper brakeshoe (1) on brake spider (8).
2. Install two retaining springs (7) on upper brakeshoe (1).
3. Install lower brakeshoe (6) on two retaining springs (7).
4. Install lower brakeshoe (6) on brake spider (8).
5. Install release spring (5).
6. Install two cam roller pins (2) and two cam rollers (3).
7. Install front hub, drum, seals and bearings (WP 0208 00).
8. Adjust slack adjuster (WP 0180 00).

END OF WORK PACKAGE

FRONT BRAKE SPIDER AND BRAKE CHAMBER BRACKET REPLACEMENT (M915A3) 0175 00

THIS WORK PACKAGE COVERS

Removal, Installation

INITIAL SETUP

Tools and Special Tools

Tool kit, general mechanic's (Item 50, WP 0306 00)

Wrench, torque, 50-250 lb-ft (Item 58, WP 0306 00)

Materials/Parts

Grease, GAA (Item 18, WP 0305 00)

Oil, lubricating (Item 22, WP 0305 00)

Nut, lock (P/N M45913/1-1-CG5C) (7)

Materials/Parts - Continued

Seal (P/N A-1205-V-1556) (2)

Washer, lock (P/N 1229-R-512) (6)

Equipment Condition

Front brakeshoes removed (WP 0174 00)

Front air brake chamber removed (WP 0181 00)

Front ABS sensor removed (WP 0122 00)

Front slack adjuster and s-cam removed (WP 0180 00)

REMOVAL

1. Remove two nuts (10), lockwashers (9), and screws (1) from brake spider (3). Discard lockwashers.
2. Remove two nuts (14) and lockwashers (15) from brake spider (3). Discard lockwashers.
3. Remove two screws (16) 2-piece dust shield (17) from brake spider (3).
4. Remove two nuts (18), screws (19), and clamps (20) from brake spider (3).

NOTE

Note position of brake chamber bracket to aid in installation.

5. Remove two nuts (8), lockwashers (7), screws (2), and brake chamber bracket (6) from brake spider (3). Discard lockwashers.
6. Remove two seals (4) and bushings (5) from brake chamber bracket (6). Discard seals.
7. Remove seven locknuts (11), washers (12), screws (21), and brake spider (3) from axle flange (13). Discard locknuts.

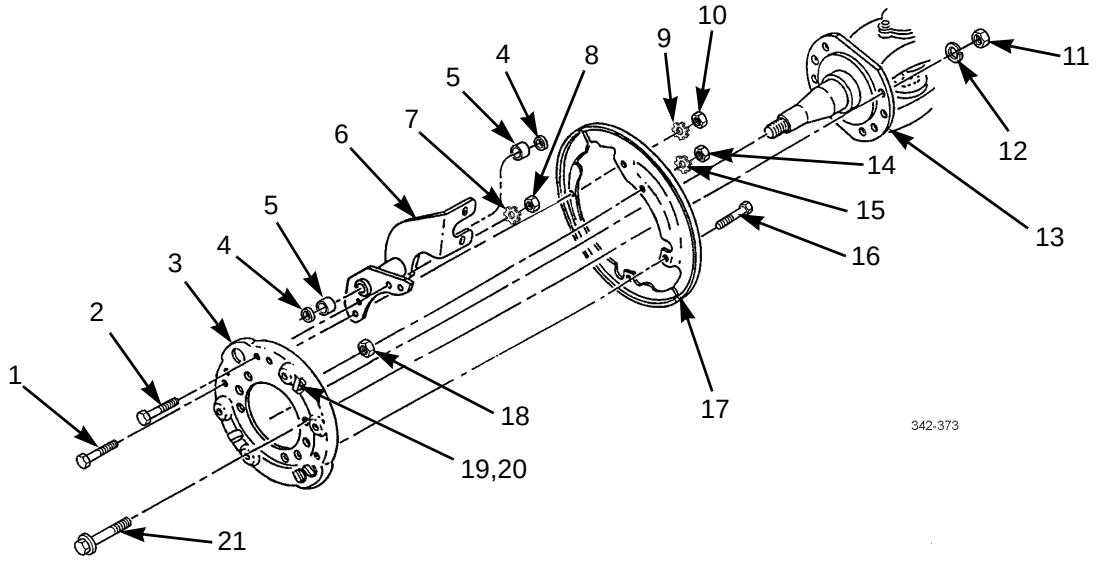

INSTALLATION

1. Install brake spider (3) on axle flange (13) with seven screws (21), washers (12), and new locknuts (11). Tighten locknuts to 75 lb-ft (102 Nm) in sequence shown. Tighten locknuts again to 150-175 lb-ft (203-237 Nm) in sequence shown.

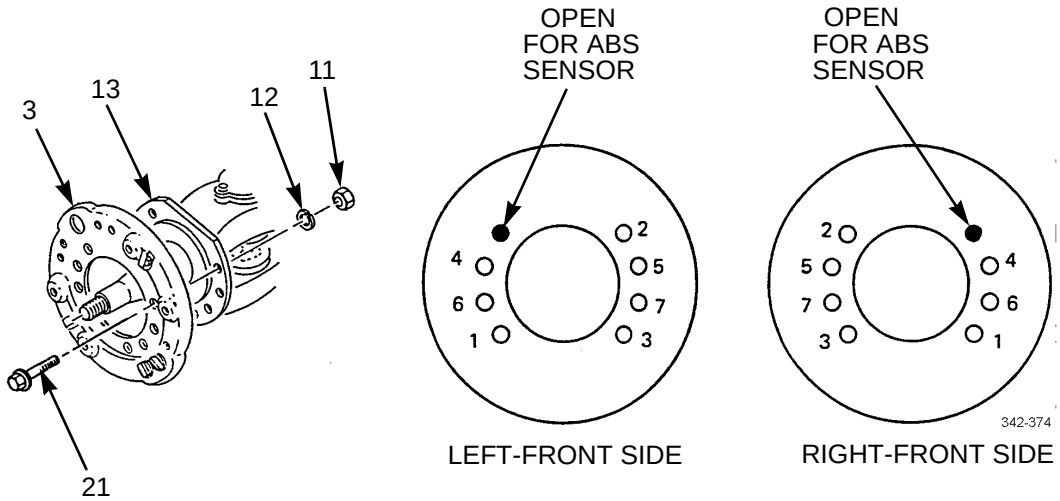

2. Apply a light coat of lubricating oil to two bushings (5) and two new seals (4).
3. Install two bushings (5), with label ends facing each other, on brake chamber bracket (6) to a depth of 3/8 in (9.5 mm) from each end of brake chamber bracket.
4. Install two new seals (4) in brake chamber bracket (6) with lip of both seals facing toward vehicle.
5. Install brake chamber bracket (6) on brake spider (3) with two screws (2), new lockwashers (7), and nuts (8).
6. Apply a light coat of GAA grease to two bushings (5) in brake chamber bracket (6).
7. Install 2-piece dust shield (17) on brake spider (3) with two screws (16).
8. Install two clamps (20), screws (19), and nuts (18) on brake spider (3).
9. Install two new lockwashers (15) and nuts (14) on brake spider (3).
10. Install two screws (1), new lockwashers (9), and nuts (10) on brake spider (3).

FRONT BRAKE SPIDER AND BRAKE CHAMBER BRACKET REPLACEMENT (M915A3) - CONTINUED

0175 00

INSTALLATION - CONTINUED

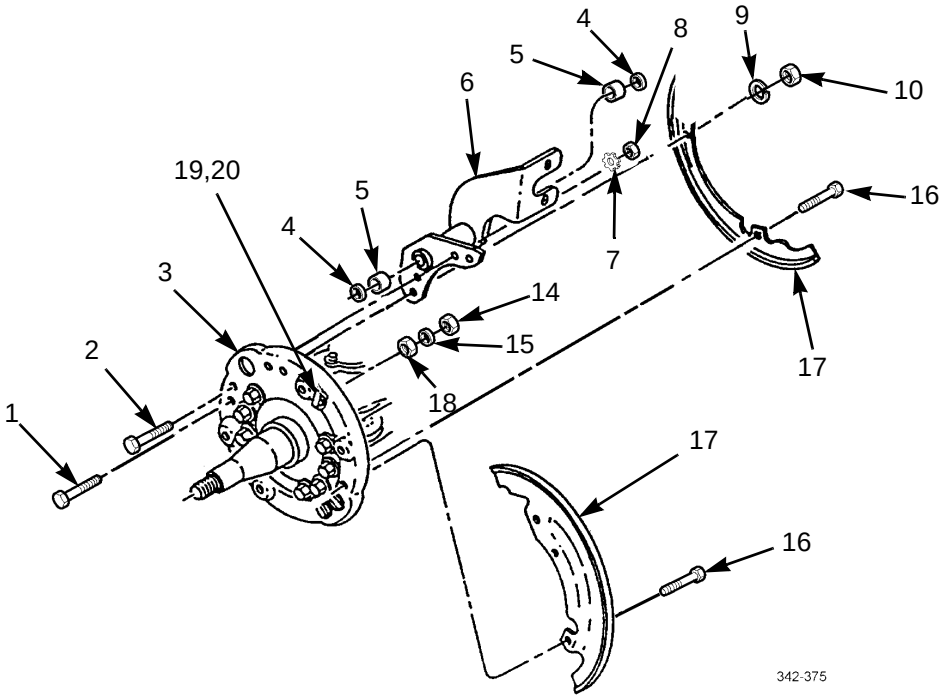

11. Install front slack adjuster and s-cam (WP 0180 00).
12. Install front air brake chamber (WP 0181 00).
13. Install front ABS sensor (WP 0122 00).
14. Install front brakeshoes (WP 0174 00).
15. Apply GAA grease to brake chamber bracket (6).

END OF WORK PACKAGE

FRONT BRAKE SPIDER AND BRAKE CHAMBER BRACKET REPLACEMENT (M916A3, M917A2) 0176 00

THIS WORK PACKAGE COVERS

Removal, Installation

INITIAL SETUP

Tools and Special Tools

Tool kit, general mechanic's (Item 50, WP 0306 00)

Materials/Parts

O-ring (P/N 1205G761)

Equipment Conditions

Front air brake chamber removed (WP 0181 00)

Front hub, drum, seals and bearings removed (WP 0208 00)

Front brakeshoes removed (WP 0174 00)

Slack adjuster and S-cam removed (WP 0180 00)

REMOVAL

1. Remove four bolts (5) and brake chamber bracket (1) from front brake spider (3).
2. Remove grease fitting (4) from brake chamber bracket (1).
3. Remove O-ring (2) from front brake spider (3). Discard O-ring.

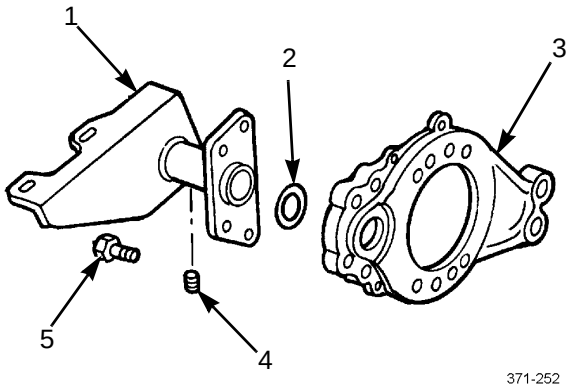

INSTALLATION

1. Install new O-ring (2) to front brake spider (3).
2. Install grease fitting (4) to brake chamber bracket (1).
3. Install brake chamber bracket (1) to front brake spider (3) with four bolts (5).
4. Install slack adjuster and S-cam (WP 0180 00).
5. Install front brakeshoes (WP 0174 00).
6. Install front hub, drum, seals and bearings (WP 0208 00).
7. Install front air brake chamber (WP 0181 00).

END OF WORK PACKAGE

REAR BRAKESHOE REPLACEMENT 0177 00

THIS WORK PACKAGE COVERS

Removal, Cleaning and Inspection, Installation

INITIAL SETUP

Tools and Special Tools

Tool kit, general mechanic's (Item 50, WP 0306 00)

Materials/Parts

Compound, antiseize (Item 9, WP 0305 00)

References

WP 0299 00

Equipment Condition

Rear hub, drum, wheel bearings, and seal removed (WP 0209 00)

REMOVAL

1. Lift upper brakeshoe (1) and pull roller retaining clip (2).
2. Remove cam roller (3) and roller retaining clip (2).
3. Push on lower brakeshoe (6) and pull roller retaining clip (4).
4. Remove cam roller (5) and roller retaining clip (4).

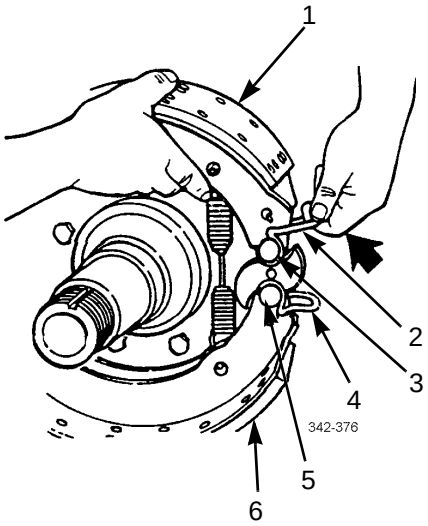

REMOVAL - CONTINUED

5. Lift lower brakeshoe (6) and remove return spring (7).

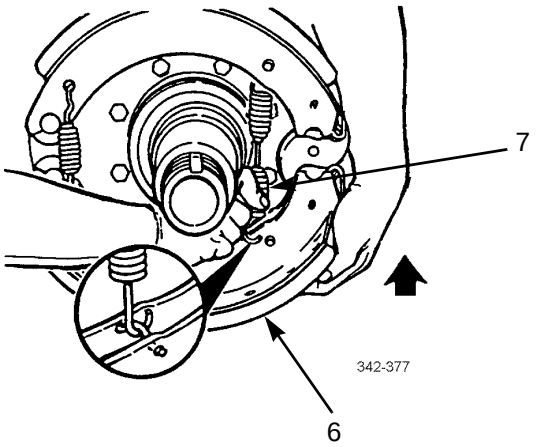

6. Rotate lower brakeshoe (6) away from s-cam (9).

7. Remove two retaining springs (8), upper and lower brakeshoes (1 and 6), and two anchor pins (10).

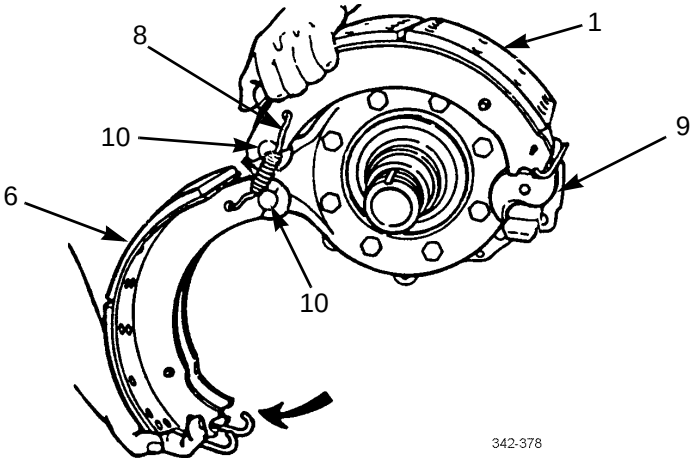

CLEANING AND INSPECTION

1. Clean rear brakeshoes and components in accordance with WP 0299 00.

2. Measure brake lining thickness. Thickness must be NO LESS than 1/4 in (6.4 mm). If brake lining is less than 1/4 in (6.4 mm), replace brakeshoes.

3. Measure clearance between top of brake lining and top of all rivet heads. Clearance must be a minimum of 1/32 in (0.8 mm). If clearance is less than 1/32 in (0.8 mm), replace brakeshoes.

4. Inspect all remaining brakeshoe parts in accordance with WP 0299 00.

INSTALLATION

WARNING

Brakeshore linings and inside drum friction surface must be free of all oil/grease and other contaminants prior assembly to ensure maximum braking capability. Oil/grease and other contaminants may compromise braking that could lead to a serious accident resulting in injury and/or death.

1. Apply a thin film of antiseize compound to each anchor pin (10) and small diameter of two cam rollers (3 and 5).
2. Install two anchor pins (10).
3. Install upper brakeshoe (1) on upper anchor pin (10).
4. Install two retaining springs (8).
5. Install lower brakeshoe (6) on lower anchor pin (10).
6. Rotate lower brakeshoe (6) toward s-cam (9).

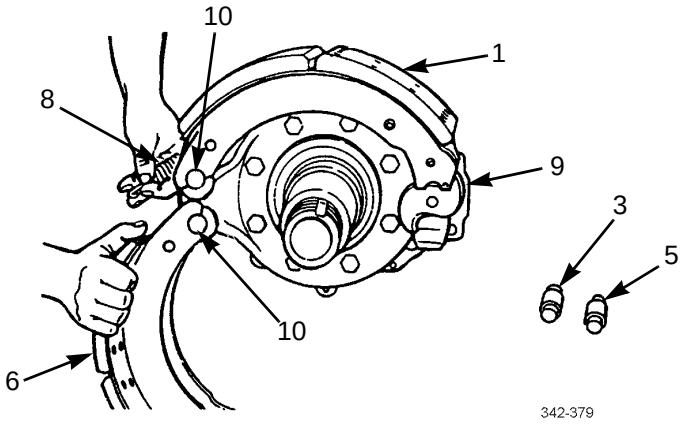

INSTALLATION - CONTINUED

7. Install return spring (7) between upper and lower brakeshoes (1 and 6).
8. Pull upper and lower brakeshoes (1 and 6) away from s-cam (9).
9. Install two cam rollers (3 and 5) and two roller retaining clips (2 and 4).

NOTE

Press ears of roller retaining clips together so that retainer fits between brakeshoe webs.

10. Press each roller retaining clip (2 and 4) between brakeshoe webs (12) until ears of roller retaining clips lock in holes (11) of brakeshoe webs.

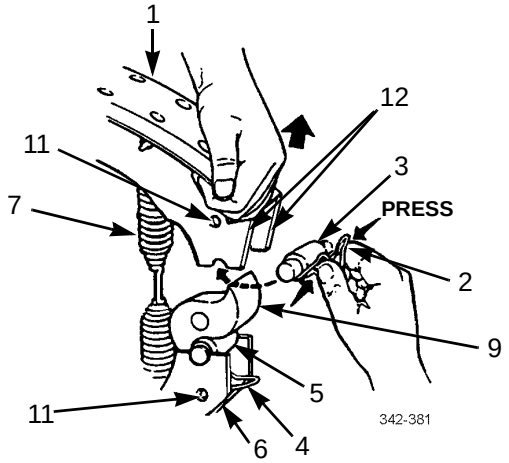

11. Install rear hub, drum, wheel bearings, and seal (WP 0209 00).

END OF WORK PACKAGE

REAR BRAKE SPIDER AND BRAKE CHAMBER BRACKET REPLACEMENT 0178 00

THIS WORK PACKAGE COVERS

Removal, Installation

INITIAL SETUP

Tools and Special Tools

Tool kit, general mechanic's (Item 50, WP 0306 00)

Wrench, torque, 50-250 lb-ft (Item 58, WP 0306 00)

Materials/Parts

Grease, GAA (Item 18, WP 0305 00)

Nut, lock (P/N M95913/1-10CG5C) (8)

Seal (P/N NA1205V1556) (2)

Equipment Condition

Rear brakeshoes removed (WP 0177 00)

Rear air brake chamber removed (WP 0182 00)

Rear ABS sensor removed (WP 0123 00)

Rear slack adjuster and s-cam removed (WP 0180 00)

REMOVAL

1. Remove four screws (4), washers (5), and brake chamber bracket (3) from spider (6).
2. Remove two seals (1) and bushings (2) from brake chamber bracket (3). Discard seals.

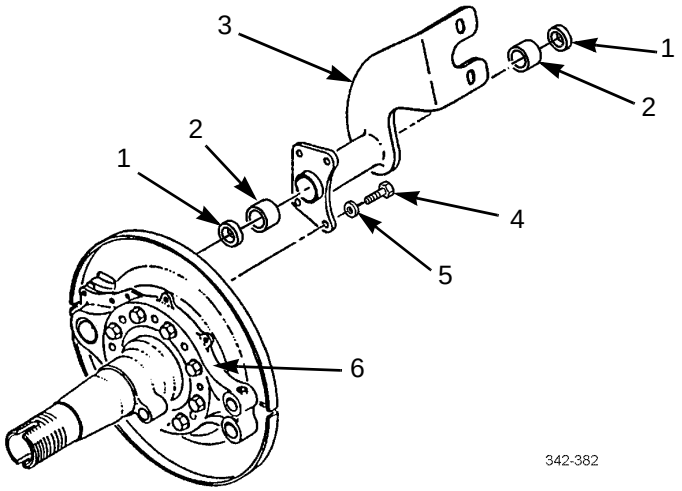

REAR BRAKE SPIDER AND BRAKE CHAMBER BRACKET REPLACEMENT - CONTINUED

0178 00

REMOVAL - CONTINUED

NOTE

Matchmark spider position prior to removal from axle flange to aid in installation.

3. Remove eight locknuts (8), washers (9), flange bolts (10), washers (11), and spider (6) from axle flange (7). Discard locknuts.

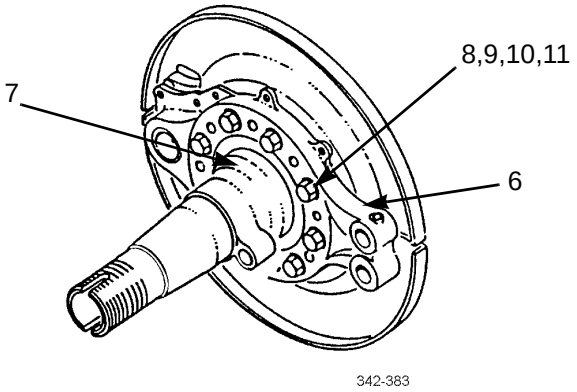

INSTALLATION

NOTE

Position spider as matchmarked during removal.

1. Install spider (6) on axle flange (7) with eight washers (11), flange bolts (10), washers (9), and new locknuts (8). Tighten locknuts to 150-175 lb-ft (203-237 Nm) in sequence shown.

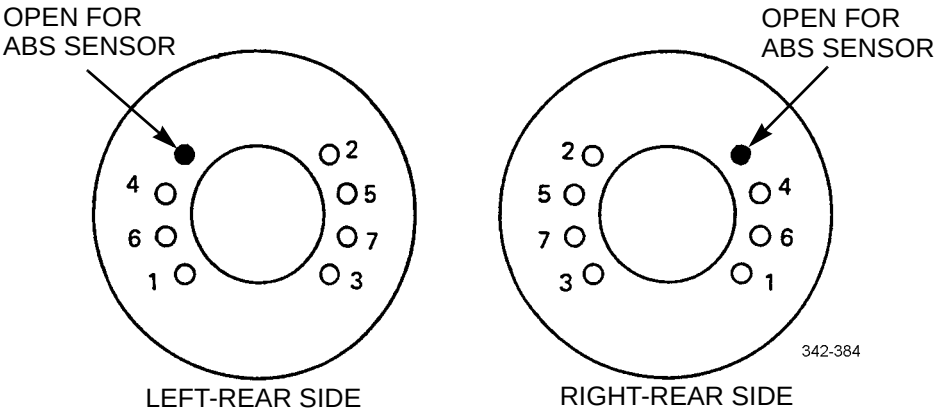

2. Apply a light coat of GAA grease to two bushings (2) and new seals (1).

NOTE

Install bushings with label ends facing each other. Install bushings to a depth of 3/8 in (9.5 mm) from each end. Install each seal with lip facing slack adjuster.

3. Install two bushings (2) and seals (1) on spider (6).

REAR BRAKE SPIDER AND BRAKE CHAMBER BRACKET REPLACEMENT - CONTINUED

0178 00

INSTALLATION - CONTINUED

4. Install brake chamber (3) on spider (6) with four washers (5) and screws (4).

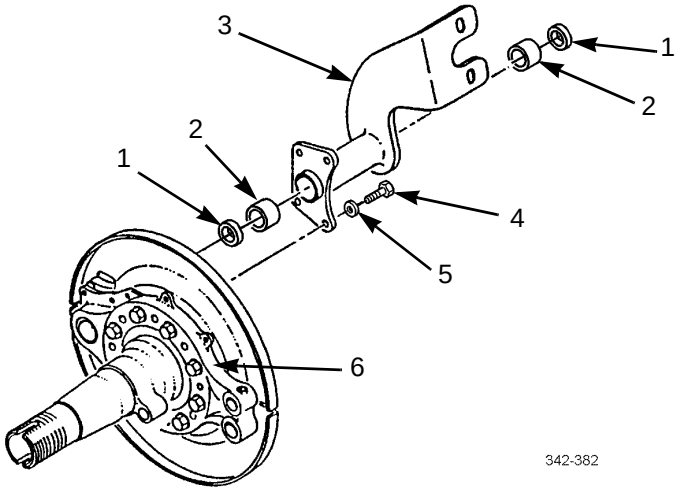

5. Install rear slack adjuster and s-cam (WP 0180 00).
6. Install rear air brake chamber (WP 0182 00).
7. Install rear ABS sensor (WP 0123 00).
8. Install rear brakeshoes (WP 0177 00).
9. Apply GAA grease to brake chamber bracket (3).

END OF WORK PACKAGE

SLACK ADJUSTER ADJUSTMENT 0179 00

THIS WORK PACKAGE COVERS

Adjustment

INITIAL SETUP

Tools and Special Tools

Tool kit, general mechanic's (Item 50, WP 0306 00)

Jack, hydraulic, hand (Item 24, WP 0306 00)

Trestle, hoist, portable (Item 52, WP 0306 00)

Wrench, torque, 0-300 lb-in (Item 56, WP 0306 00)

Wrench, torque, 15-75 lb-ft (Item 57, WP 0306 00)

References

WP 0300 00

Equipment Condition

Wheel jacked up and axle supported by trestle

ADJUSTMENT

NOTE

Whenever a new slack adjuster or air brake chamber has been installed, perform steps 1 through 7 using a manufactured slack adjuster template (WP 0300 00).

1. Compare length of slack adjuster (1) with template (2). Marks by holes in small end of template indicate length of slack adjuster.

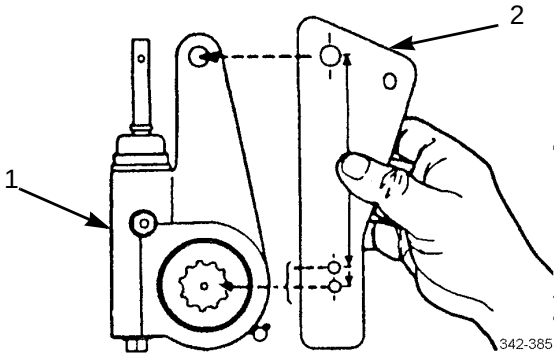

ADJUSTMENT - CONTINUED

CAUTION

To ensure that slack adjuster adjusts brake properly, clevis must be installed in correct position on push rod.

2. Insert large clevis pin (3) through large hole (9) of template and large holes of clevis (4).
3. Select hole (8) of template that matches length of slack adjuster. Hold that hole on center of camshaft or powershaft (7).
4. Look through slot (6) in template. Small hole (5) in clevis (4) MUST be completely visible.
5. If necessary, adjust position of clevis (4) on push rod until small hole (5) in clevis is completely visible through slot (6) in template.

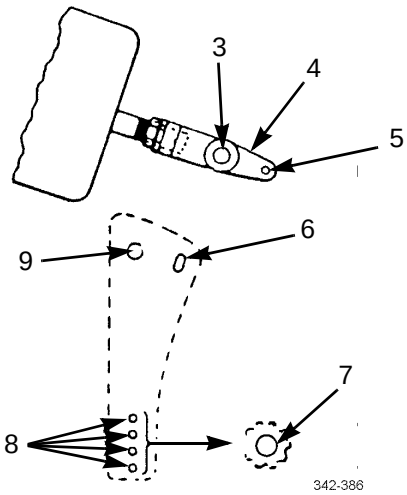

6. Tighten jamnut (10) against clevis (4) to hold clevis in correct position. For 1/2-20 threads, tighten jamnut to 20-30 lb-ft (27-41 Nm). For 5/8-18 threads, tighten jamnut to 25-50 lb-ft (34-68 Nm).

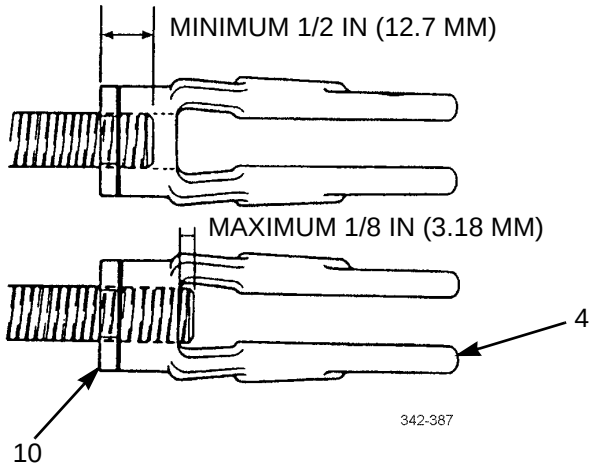

ADJUSTMENT - CONTINUED

7. There must be at least 1/2 in (12.7 mm) of thread engagement between clevis and push rod. Push rod must not extend through clevis more than 1/8 in (3.18 mm).

8. If adjustment cannot be obtained, install new air brake chamber.

9. Remove screw (14), spring (15), and pawl (16).

10. Rotate wheel and tighten screw (13) until wheel does not rotate.

NOTE

A slight amount of drag will be felt during wheel rotation.

11. Loosen screw (13) 1/4 turn and rotate wheel.

12. Install pawl (16), spring (15), and screw (14). Tighten screw to 180-240 lb-in (20-27 Nm).

13. Using flat tip screwdriver, pull slack adjuster (12) in direction away from brake chamber (11) while measuring total distance of travel between slack adjuster and brake chamber.

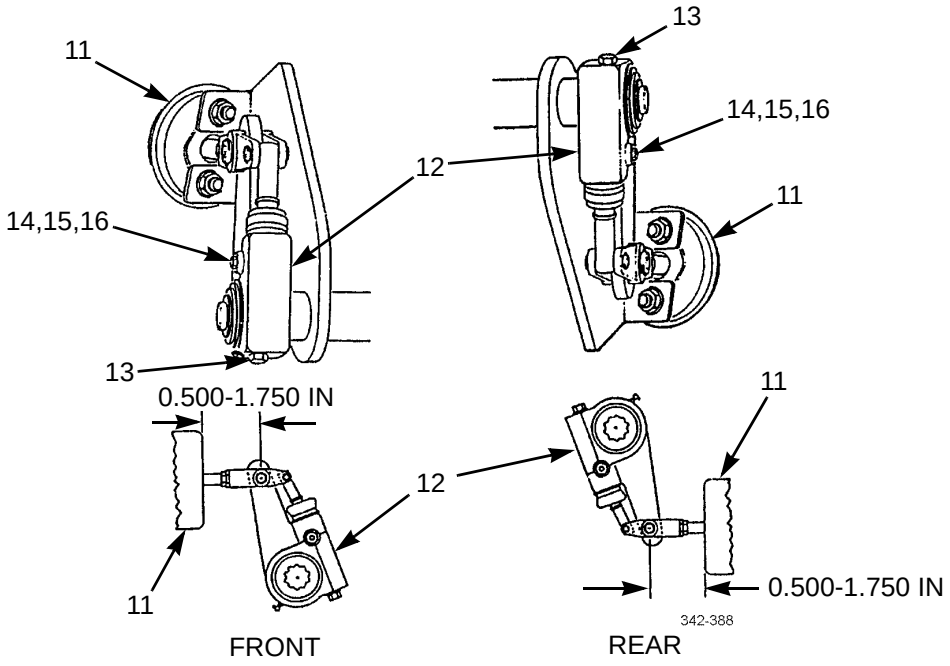

14. If total distance of travel exceeds 1-3/4 in (44.45 mm), or if total distance is not minimum of 1/2 in (12.7 mm), repeat steps 9 through 13.

15. Remove trestle from axle.

END OF WORK PACKAGE

SLACK ADJUSTER AND S-CAM REPLACEMENT 0180 00

THIS WORK PACKAGE COVERS

Front Slack Adjuster Removal, Rear Slack Adjuster Removal, Front Slack Adjuster Installation, Rear Slack Adjuster Installation

INITIAL SETUP

Tools and Special Tools

Tool kit, general mechanic's (Item 50, WP 0306 00)

Indicator, dial (Item 19, WP 0306 00)

Wrench, torque, 15-75 lb-ft (Item 57, WP 0306 00)

Materials/Parts

Pin, cotter (P/N 2257-C-1173)

Pin, cotter (P/N 2257-D-1174)

Materials/Parts - Continued

Compound, antiseize (Item 9, WP 0305 00)

Equipment Condition

Front brakeshoe removed (WP 0173 00 or WP 0174 00)

Rear brakeshoe removed (WP 0177 00)

FRONT SLACK ADJUSTER REMOVAL

1. Remove cotter pins (1 and 5) and clevis pins (2 and 3) from front brake chamber clevis (4). Discard cotter pins.

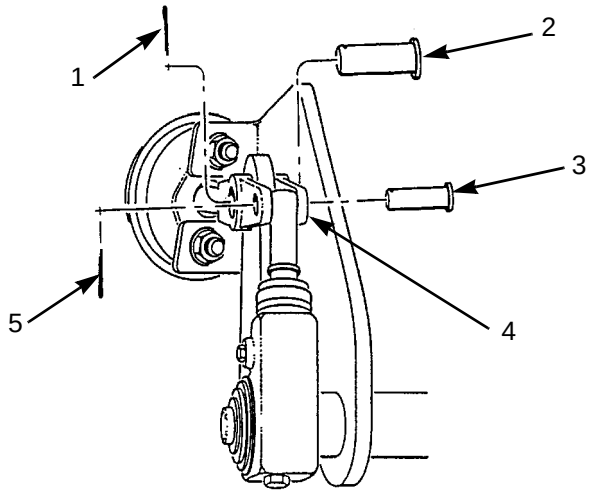

342-391

FRONT SLACK ADJUSTER REMOVAL - CONTINUED

NOTE

Note position of washers for installation.

2. Remove retaining ring (9) and washers (10) from s-cam (6).
3. Remove slack adjuster (11) and washer (12) from splined shaft of s-cam (6).
4. Mark position of s-cam (6) on mounting bracket (8) and remove s-cam and special washer (7) from mounting bracket.

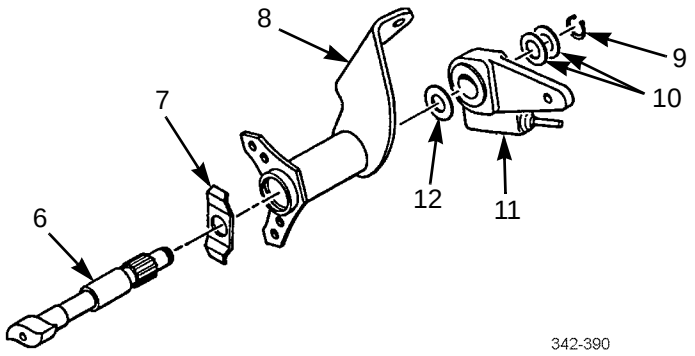

REAR SLACK ADJUSTER REMOVAL

1. Remove cotter pins (14 and 15) and clevis pins (16 and 17) from rear brake chamber clevis (13). Discard cotter pins.

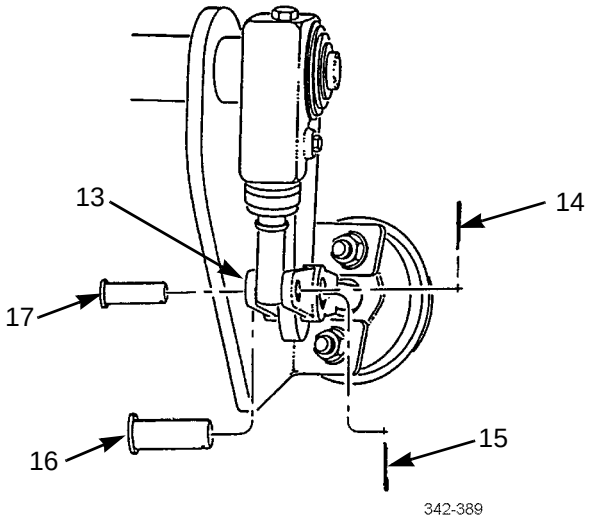

REAR SLACK ADJUSTER REMOVAL - CONTINUED

NOTE

Note position of washers for installation.

2. Remove retaining ring (21) and washers (22) from s-cam (18).
3. Remove slack adjuster (23) and washer (24) from splined shaft of s-cam (18).
4. Mark position of s-cam (18) on mounting bracket (20) and remove s-cam and special washer (19) from mounting bracket.

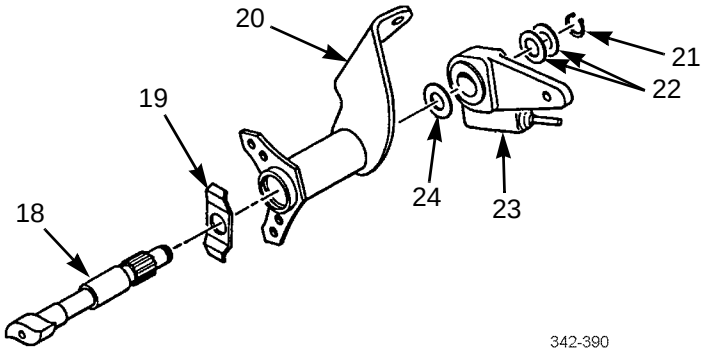

FRONT SLACK ADJUSTER INSTALLATION

1. Lightly coat splines of s-cam (6) with antiseize compound.
2. Install s-cam (6) and special washer (7) on mounting bracket (8).
3. Install washer (12) and slack adjuster (11) on s-cam (6) with head of screw (25) toward vehicle.

NOTE

If repeating installation because measurement in step 12 exceeded 0.06 in (1.5 mm), add another washer as a spacer.

4. Install washers (10) and retaining ring (9) on s-cam (6).

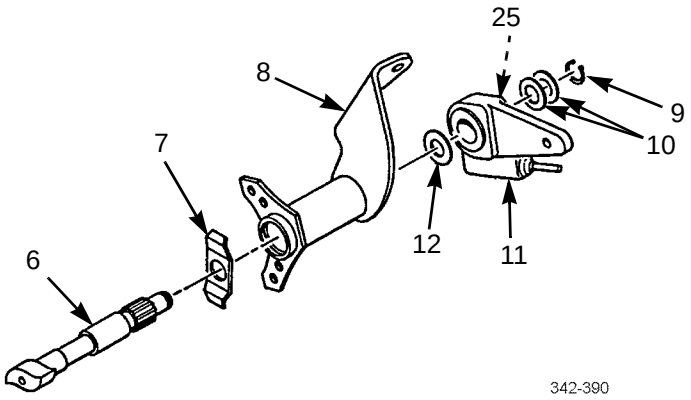

FRONT SLACK ADJUSTER INSTALLATION - CONTINUED

5. Remove screw (25), spring (26), and pawl (27) from slack adjuster (11).
6. Rotate adjusting screw (28) to align slack adjuster (11) with front brake chamber clevis (4).
7. Hold s-cam (6) in position and rotate adjusting screw (28) to align slack adjuster (11) with clevis (4).
8. Install clevis pins (2 and 3).
9. Install pawl (27), spring (26), and screw (25) on slack adjuster (11). Tighten screw to 15-20 lb-ft (20-27 Nm).
10. Ensure that s-cam (6) is against brake spider (29).

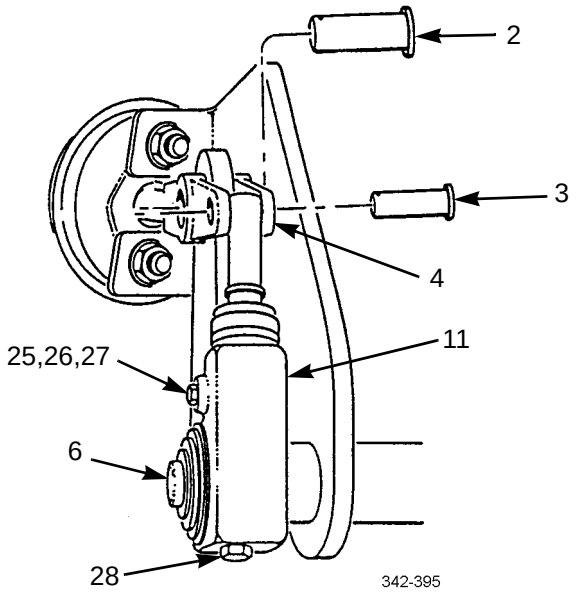

11. Attach magnetic base of dial indicator to brake spider (29) with indicator point on end surface of s-cam (6). Set dial indicator to zero.
12. Push s-cam (6) outward to end of travel and check new reading on dial indicator. If reading is more than 0.06 in (1.5 mm), perform Removal steps 2 through 4 and Installation steps 1 through 12.

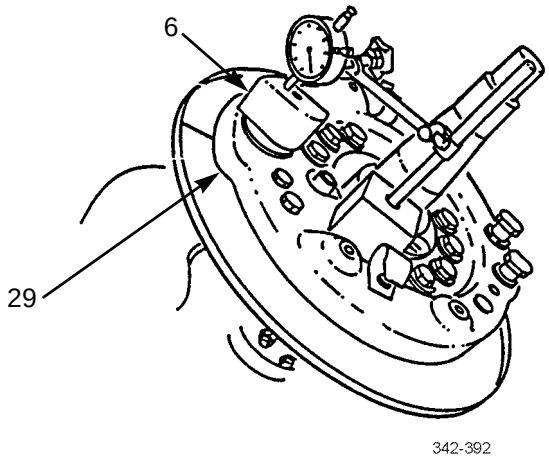

FRONT SLACK ADJUSTER INSTALLATION - CONTINUED

13. Install new cotter pins (1 and 5) on clevis pins (2 and 3).

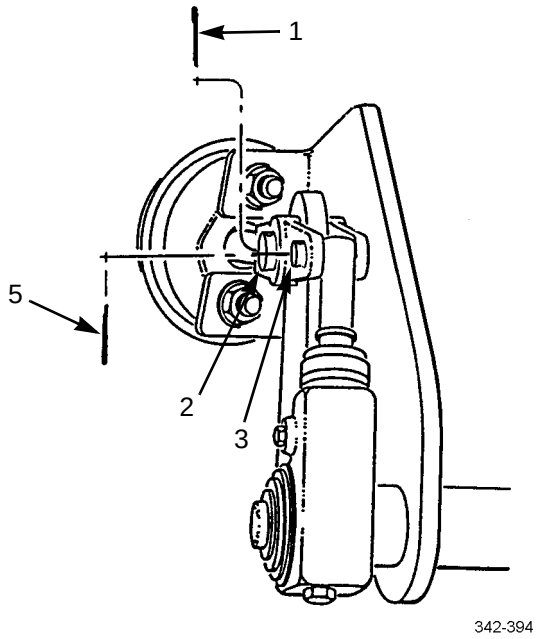

14. Install front brakeshoe (WP 0173 00).

REAR SLACK ADJUSTER INSTALLATION

1. Lightly coat splines of s-cam (18) with antiseize compound.
2. Install s-cam (18) and special washer (19) on mounting bracket (20).
3. Install washer (24) and slack adjuster (23) on s-cam (18) with head of screw (30) toward vehicle.

NOTE

If repeating installation because measurement in step 11 exceeded 0.06 in (1.5 mm), add another washer as a spacer.

4. Install washers (22) and retaining ring (21) on s-cam (18).

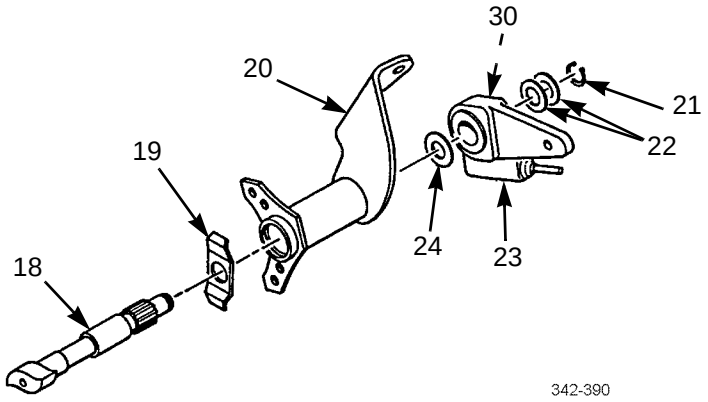

REAR SLACK ADJUSTER INSTALLATION - CONTINUED

5. Remove screw (30), spring (32), and pawl (33) from slack adjuster (23).
6. Hold s-cam (18) in position and rotate adjusting screw (31) to align slack adjuster (23) with rear brake chamber clevis (13).
7. Install two clevis pins (16 and 17) on rear brake chamber clevis (13).
8. Install pawl (33), spring (32), and screw (30) on slack adjuster (22). Tighten screw to 15-30 lb-ft (20-27 Nm).

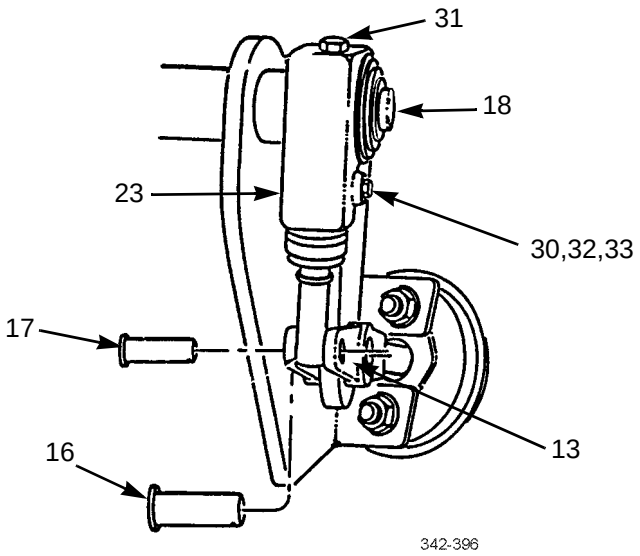

9. Ensure that s-cam (18) is against brake spider (34).
10. Attach magnetic base of dial indicator to brake spider (34) with indicator point on end surface of s-cam (18). Set dial indicator to zero.
11. Push s-cam (18) outward to end of travel and check new reading on dial indicator. If reading is more than 0.06 in (1.5 mm), perform Removal steps 2 through 4 and Installation steps 1 through 11.

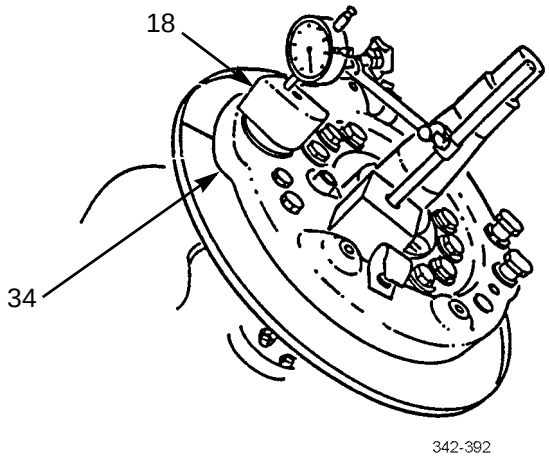

12. Install new cotter pins (14 and 15) on clevis pins (16 and 17).

REAR SLACK ADJUSTER INSTALLATION - CONTINUED

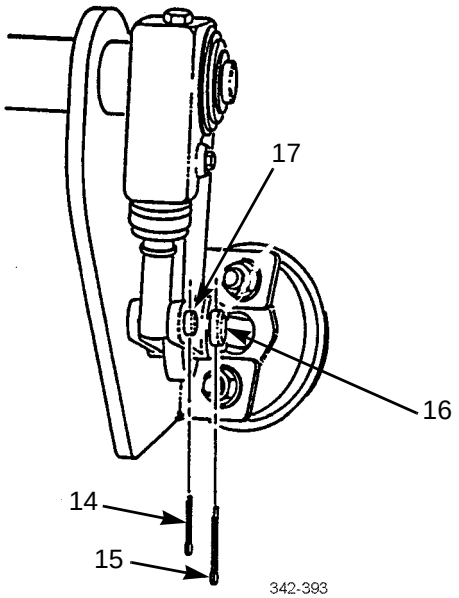

13. Install rear brakeshoe (WP 0177 00).

END OF WORK PACKAGE

FRONT AIR BRAKE CHAMBER REPLACEMENT 0181 00

THIS WORK PACKAGE COVERS

Removal, Installation

INITIAL SETUP

Maintenance Level

Unit

Tools and Special Tools

Tool kit, general mechanic's (Item 102, WP 0333 00)

Materials/Parts

Compound, sealing, pipe (Item 17, WP 0332 00)

Strap, tiedown (Item 41, WP 0332 00)

Materials/Parts - Continued

Pin, cotter (P/N 2257-C-1173)

Pin, cotter (P/N 2257-D-1174)

Equipment Condition

Air system drained (TM 9-2320-303-10).

Hood opened (TM 9-2320-303-10).

NOTE

Each of two front air brake chambers is replaced the same way. Left-front air brake chamber is shown.

REMOVAL

WARNING

DO NOT disconnect any air system lines or fittings unless vehicle engine is shut off and air system pressure is relieved. Failure to follow this warning could result in serious injury to personnel.

FRONT AIR BRAKE CHAMBER REPLACEMENT - CONTINUED 0181 00

REMOVAL - CONTINUED

1. Disconnect air hose (1) from adapter (2) of air brake chamber (12).
2. Remove adapter (2) from air brake chamber (12).
3. Remove tiedown strap (4) from ABS wiring harness (3). Discard tiedown strap.
4. Remove two cotter pins (10) and two clevis pins (8) connecting brake chamber clevis (7) to slack adjuster (9). Discard cotter pins.
5. Remove two nuts (5), washers (6), and air brake chamber (12) from mounting bracket (11).

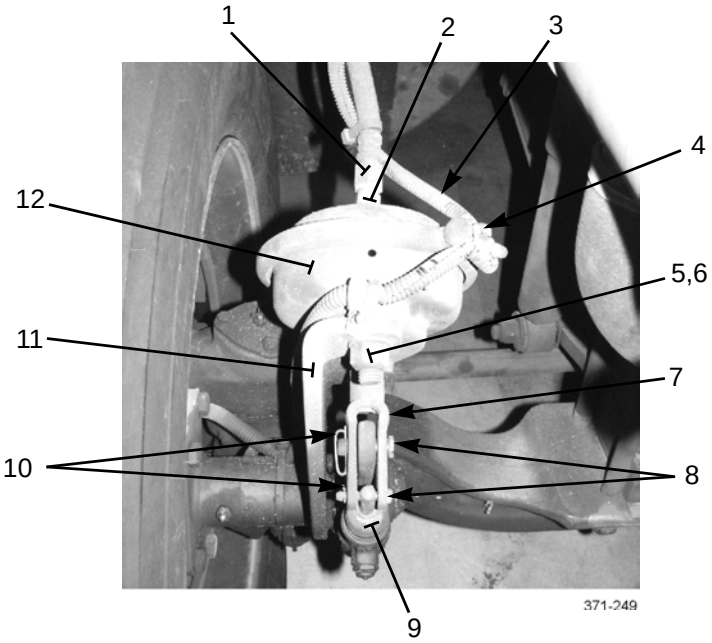

INSTALLATION

1. Install air brake chamber (12) to mounting bracket (11) with two washers (6) and nuts (5).
2. Align brake chamber clevis (7) to slack adjuster (9) and install two clevis pins (8) and new cotter pins (10).

WARNING

- Adhesives and sealing compounds can burn easily, can give off harmful vapors, and are harmful to skin and clothing. To avoid injury or death, keep away from open fire and use in a well-ventilated area. If adhesives or sealing compound contacts skin or clothing, wash immediately with soap and water.
- Ensure that all air lines and fittings are clear of debris and excess pipe sealing compound does not enter air lines or fittings. Failure to follow this warning could result in injury to personnel or damage to equipment.

3. Lightly coat pipe threads of adapter (2) with pipe sealing compound and install adapter to air brake chamber (12).

INSTALLATION - CONTINUED

4. Connect air hose (1) to adapter (2).
5. Install ABS wiring harness (3) to air brake chamber (12) with new tiedown strap (4).
6. Start vehicle and build up air pressure (TM 9-2320-302-10). Check for leaks.
7. Close hood (TM 9-2320-302-10).

END OF WORK PACKAGE

REAR AIR BRAKE CHAMBER MAINTENANCE 0182 00

THIS WORK PACKAGE COVERS

Inspection, Removal, Installation

INITIAL SETUP

Tools and Special Tools

Tool kit, general mechanic's (Item 50, WP 0306 00)

Materials/Parts

Compound, sealing, pipe (Item 13, WP 0305 00)

Tags, marker (Item 34, WP 0305 00)

Pin, cotter (P/N 2257-C-1173)

Pin, cotter (P/N 2257-D-1174)

Nut, lock (P/N 9002001) (2)

References

TM 9-2320-302-10

Equipment Condition

Brakes caged (TM 9-2320-302-10)

Parking brake released (TM 9-2320-302-10)

Vehicle blocked

Air system drained (TM 9-2320-302-10)

INSPECTION

1. Chock wheels.

NOTE

When inspection has been completed, ensure that weather seal cap is installed in release stud hole in spring brake chamber.

2. Remove weather seal cap from spring brake chamber and visually inspect through release stud hole. When fully released with 90-120 psi air pressure, top of piston on chamber should be no more than 1/4-3/8 in from top of head. Release stud access hole in center of piston should be somewhat centered.
3. Cage the brakes (TM 9-2320-302-10). If brakes will not cage, suspect a broken spring. Go to step 4.
4. Apply parking brake and measure pushrod stroke. A short or no stroke, compared to other wheels, indicates a broken spring.
5. With parking brake applied, tap head of spring brake chamber. A good spring will produce a ring/harmonic vibration.

NOTE

In some cases brake chamber pushrod will return to zero position with a broken spring condition. Check in step 6 should not be considered as a definitive test.

6. Release parking brake and measure pushrod position. If it does not return all the way to zero stroke position, suspect a broken spring.

REMOVAL

NOTE

- Tag air hoses to aid in installation.
- Each of four rear brake chambers are replaced the same way. One is shown.

1. Disconnect service brake hose (5) and spring brake hose (6) from service brake fitting (4) and spring brake fitting (7).
2. Remove two cotter pins (11) and clevis pins (3) from brake chamber clevis (10). Discard cotter pins.
3. Remove two locknuts (1) and washers (2). Discard locknuts.
4. Remove brake chamber (9).
5. Remove service brake fitting (4) from brake chamber (9).
6. Remove spring brake fitting (7) from brake chamber (9).

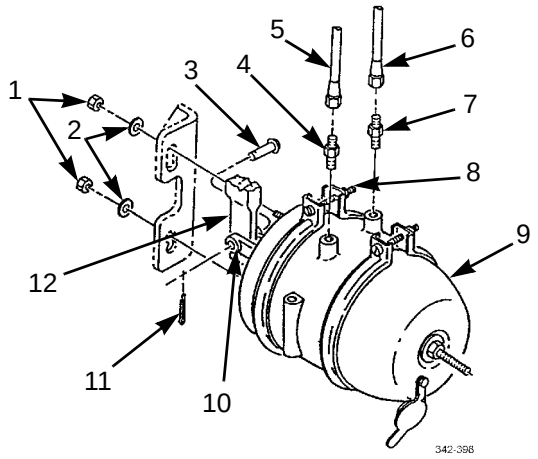

INSTALLATION

- Adhesives and sealing compounds can burn easily, can give off harmful vapors, and are harmful to skin and clothing. To avoid injury or death, keep away from open fire and use in a well-ventilated area. If adhesives or sealing compound contacts skin or clothing, wash immediately with soap and water.
- Ensure all air lines and fittings are clear of debris and excess pipe sealing compound does not enter air lines or fittings. Failure to follow this warning could result in injury to personnel or damage to equipment.

1. Lightly coat threads of service brake fitting (4) with pipe sealing compound. Install fitting on brake chamber (9).
2. Lightly coat spring brake fitting (7) with pipe sealing compound. Install fitting on brake chamber (9).

NOTE

Brake chamber is mounted in upper part of figure 8 hole.

3. Install brake chamber (9) so that service brake fitting (4) and spring brake fitting (7) are accessible.

INSTALLATION - CONTINUED

4. Install two washers (2) and new locknuts (1).
5. If service brake fitting (4) and spring brake fitting (7) are not properly alined with hoses (5 and 6), loosen nut (8) and rotate brake chamber (9) until fittings and hoses are alined. Tighten nut.
6. Connect brake chamber clevis (10) to slack adjuster (12) with two clevis pins (3) and new cotter pins (11).
7. Connect service brake hose (5) and spring brake hose (6) to service brake fitting (4) and spring brake fitting (7).
8. Uncage brakes (TM 9-2320-302-10).
9. Start vehicle and build air pressure (TM 9-2320-302-10). Check for leaks.

END OF WORK PACKAGE

PRIMARY I AIR TANK AND FITTINGS REPLACEMENT (M915A3, M916A3) 0183 00

THIS WORK PACKAGE COVERS

Removal, Installation

INITIAL SETUP

Tools and Special Tools

Tool kit, general mechanic's (Item 50, WP 0306 00)

Materials/Parts

Compound, sealing, pipe (Item 13, WP 0305 00)

Tags, marker (Item 34, WP 0305 00)

Nut, lock (P/N M45913/1-6CG5C) (6)

References

WP 0171 00

Equipment Condition

Air system drained (TM 9-2320-302-10)

Rear platform removed (M915A3) (WP 0261 00) or chassis guard screen removed (M916A3) (WP 0262 00)

REMOVAL

NOTE

Tag tubes to aid in installation.

1. Disconnect two tubes (8) from air tank (10).
2. Remove four locknuts (1), washers (2), and air tank (10). Discard locknuts.
3. Remove two locknuts (5), screws (4), and mounting brackets (3) from air tank (10). Discard locknuts.
4. Remove two elbows (7), check valve (9), drain valve (11) (M915A3 Old Model), and two plugs (6) from air tank (10).
5. For M915A3 New Model and M916A3, remove auto drain valve (WP 0171 00).

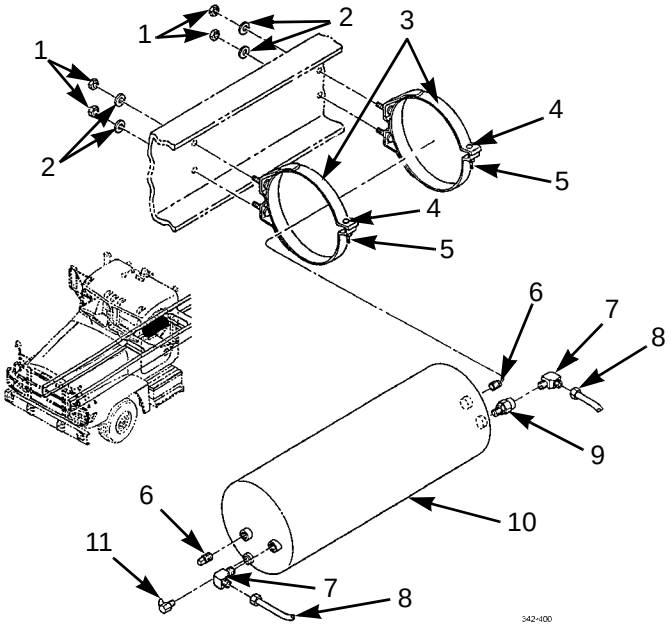

INSTALLATION

- Adhesives and sealing compounds can burn easily, can give off harmful vapors, and are harmful to skin and clothing. To avoid injury or death, keep away from open fire and use in a well-ventilated area. If adhesives or sealing compound contacts skin or clothing, wash immediately with soap and water.
- Ensure all air lines and fittings are clear of debris and excess pipe sealing compound does not enter air lines or fittings. Failure to follow this warning could result in injury to personnel or damage to equipment.

1. For M915A3 New Model and M916A3, install auto drain valve (WP 0171 00).
2. Lightly coat pipe threads of two plugs (6), drain valve (11) (M915A3 Old Model), check valve (9) and two elbows (7) with pipe sealing compound. Install plugs, drain valve, check valve, and elbows on air tank (10).
3. Install air tank (10) to two mounting brackets (3) with two screws (4) and new locknuts (5).
4. Install air tank (10) with four washers (2) and new locknuts (1).
5. Connect two tubes (8) to air tank (10).

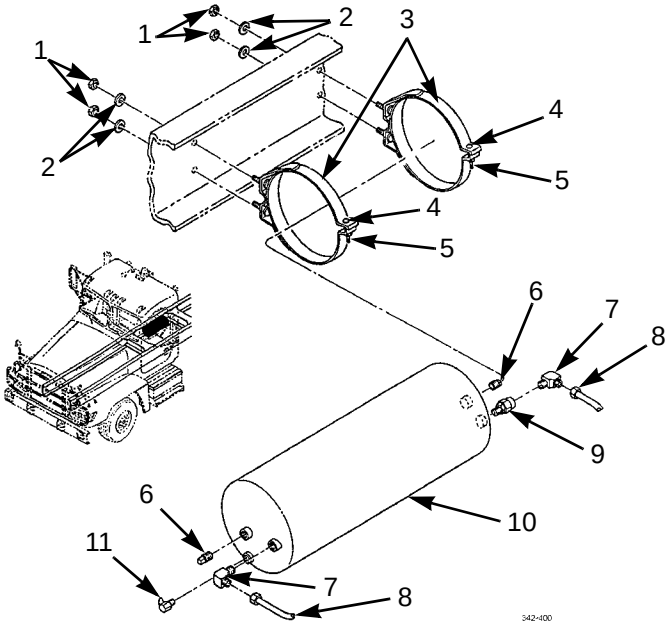

6. Start vehicle and build air pressure (TM 9-2320-302-10). Check for leaks.
7. Install rear platform (M915A3) (WP 0261 00) or chassis guard screen (M916A3) (WP 0262 00).

END OF WORK PACKAGE

PRIMARY II AIR TANK AND FITTINGS REPLACEMENT 0184 00

THIS WORK PACKAGE COVERS

Removal, Installation

INITIAL SETUP

Tools and Special Tools

Tool kit, general mechanic's (Item 50, WP 0306 00)

Materials/Parts

Compound, sealing, pipe (Item 13, WP 0305 00)

Tags, marker (Item 34, WP 0305 00)

Nut, lock (P/N M45913/16CG5C) (6)

References

WP 0171 00

Equipment Condition

Air system drained (TM 9-2320-302-10)

Spare tire removed (TM 9-2320-302-10)

REMOVAL

NOTE

Tag tubes to aid in installation.

1. Disconnect three tubes (6) from air tank (9).
2. Remove four locknuts (5), washers (4), and air tank (9). Discard locknuts.
3. Remove two locknuts (1), screws (2), and mounting brackets (3) from air tank (9). Discard locknuts.
4. Remove three elbows (7), plug (10), and drain valve (8) (M915A3 Old Model) from air tank (9).
5. For M915A3 New Model, M916A3, and M917A2, remove auto drain valve (WP 0171 00).

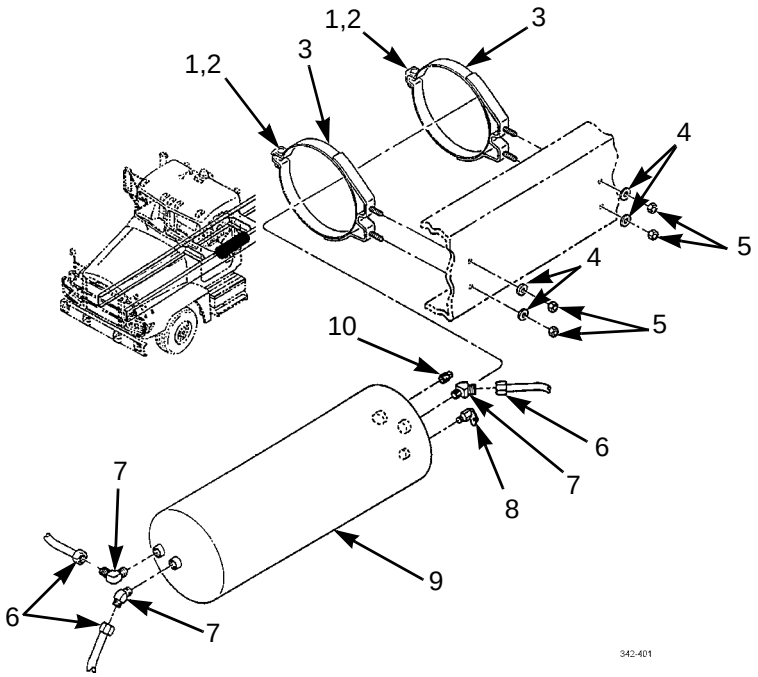

INSTALLATION

1. Install two mounting brackets (7) on air tank (2) with two screws (6) and new locknuts (5).

WARNING

- Adhesives and sealing compounds can burn easily, can give off harmful vapors, and are harmful to skin and clothing. To avoid injury or death, keep away from open fire and use in a well-ventilated area. If adhesives or sealing compound contacts skin or clothing, wash immediately with soap and water.
- Ensure all air lines and fittings are clear of debris and excess pipe sealing compound does not enter air lines or fittings. Failure to follow this warning could result in injury to personnel or damage to equipment.

2. For M915A3 New Model, M916A3, and M917A2, install auto drain valve (WP 0171 00).
3. Lightly coat threads of drain valve (8) (M915A3 Old Model), plug (10), and three elbows (7) with pipe sealing compound. Install drain valve, plug, and three elbows on air tank (9).
4. Install air tank (9) with four washers (4) and new locknuts (5).
5. Connect three tubes (6) to air tank (9).

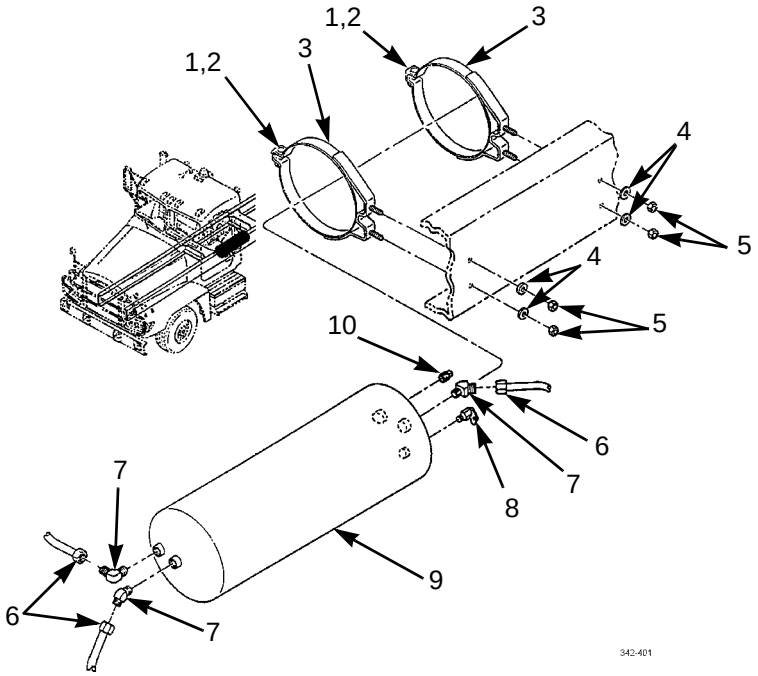

6. Start vehicle and build air pressure (TM 9-2320-302-10). Check for leaks.
7. Install spare tire (TM 9-2320-302-10).

END OF WORK PACKAGE

SECONDARY AIR TANK AND FITTINGS REPLACEMENT 0185 00

THIS WORK PACKAGE COVERS

Removal, Installation

INITIAL SETUP

Tools and Special Tools

Tool kit, general mechanic's (Item 50, WP 0306 00)

Materials/Parts

Compound, sealing, pipe (Item 13, WP 0305 00)

Tags, marker (Item 34, WP 0305 00)

Nut, lock (P/N M45913/1-4CG5C) (2)

Nut, lock (P/N M45913/1-6CG5C) (8)

References

WP 0171 00

Equipment Condition

Air system drained (TM 9-2320-302-10)

REMOVAL

NOTE

Tag tubes to aid in installation.

1. Disconnect four tubes (1) and hose (2) from air tank (3).

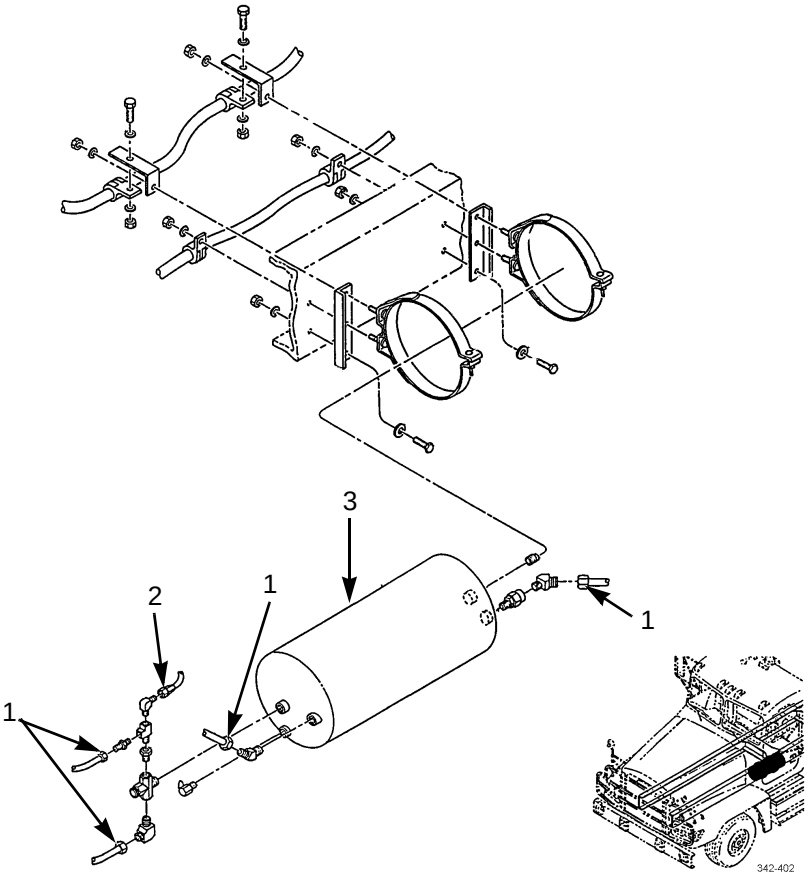

REMOVAL - CONTINUED

2. Remove two locknuts (16), screws (17), and air tank (3). Discard locknuts.
3. Remove two locknuts (20), washers (21), screws (4), and washers (7) and set cable (22) aside. Discard locknuts.
4. Remove two locknuts (5), washers (6), and brackets (8). Discard locknuts.
5. Remove two locknuts (9), washers (10), clamps (11), and mounting brackets (15). Discard locknuts.
6. Remove two locknuts (12), washers (13), screws (18), washers (19), and brackets (14). Discard locknuts.
7. Remove four elbows (23), check valve (26), plug (25), connector (29), tee (30), bushing (24), pressure protect valve (28), and drain valve (27) (M915A3 Old Model).
8. For M915A3 New Model, M916A3, and M917A2, remove auto drain valve (WP 0123 00).

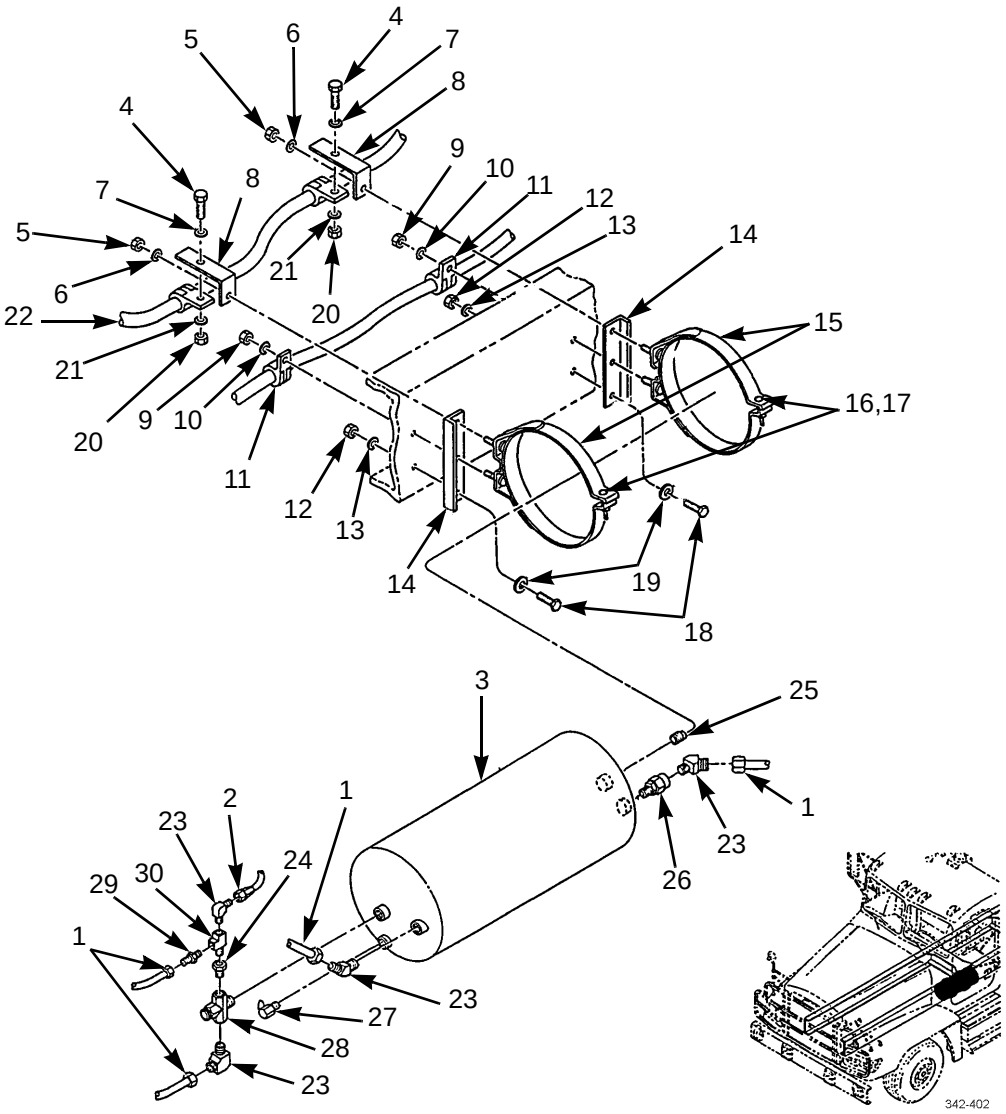

INSTALLATION


WARNINGS

- Adhesives and sealing compounds can burn easily, can give off harmful vapors, and are harmful to skin and clothing. To avoid injury or death, keep away from open fire and use in a well-ventilated area. If adhesives or sealing compound contacts skin or clothing, wash immediately with soap and water.
- Ensure all air lines and fittings are clear of debris and excess pipe sealing compound does not enter air lines or fittings. Failure to follow this warning could result in injury to personnel and damage to equipment.

1. For M915A3 New Model, M916A3, and M917A2, install auto drain valve (WP 0171 00).
2. Coat pipe threads of drain valve (27), pressure protect valve (28), bushing (24), tee (30), connector (29), plug (25), check valve (26), and four elbows (23) with pipe sealing compound.
3. Install drain valve (27), pressure protect valve (28), bushing (24), tee (30), connector (29), plug (25), check valve (26) and four elbows (23) in air tank (3).
4. Install two brackets (14) with two washers (19), screws (18), washers (13), and new locknuts (12).
5. Install two mounting brackets (15), clamps (11), washers (10), and new locknuts (9).
6. Install two brackets (8), washers (6), and new locknuts (5).
7. Install cable (22), two washers (7), screws (4), washers (21), and new locknuts (20).
8. Install air tank (3) with two screws (17), and new locknuts (16).
9. Connect hose (2) and four tubes (1) to air tank (3).
10. Start vehicle and build air pressure (TM 9-2320-302-10). Check for leaks.

END OF WORK PACKAGE

AIR SUPPLY TANK AND FITTINGS REPLACEMENT (M915A3, M916A3) 0186 00

THIS WORK PACKAGE COVERS

Removal, Installation

INITIAL SETUP

Tools and Special Tools

Tool kit, general mechanic's (Item 50, WP 0306 00)

Materials/Parts

Compound, sealing, pipe (Item 13, WP 0305 00)

Tags, marker (Item 34, WP 0305 00)

Pin, cotter (P/N MS 24665-326)

Nut, lock (P/N M45913/1-6CG5C) (8)

References

WP 0171 00

Equipment Condition

Air system drained (TM 9-2320-302-10)

Rear platform removed (M915A3) (WP 0261 00) or chassis guard screen removed (M916A3) (WP 0262 00)

REMOVAL

NOTE

Tag tubes to aid in installation.

1. Disconnect six tubes (2) from air supply tank (11).
2. Disconnect tube (8) from primary I air tank (7).
3. Remove four locknuts (3) and washers (4) and set primary I air tank (7) aside. Discard locknuts.
4. Remove cotter pin (10) and disconnect cable (9). Discard cotter pin.
5. Remove four locknuts (1), washers (12), screws (6), washers (5), and air supply tank (11). Discard locknuts.

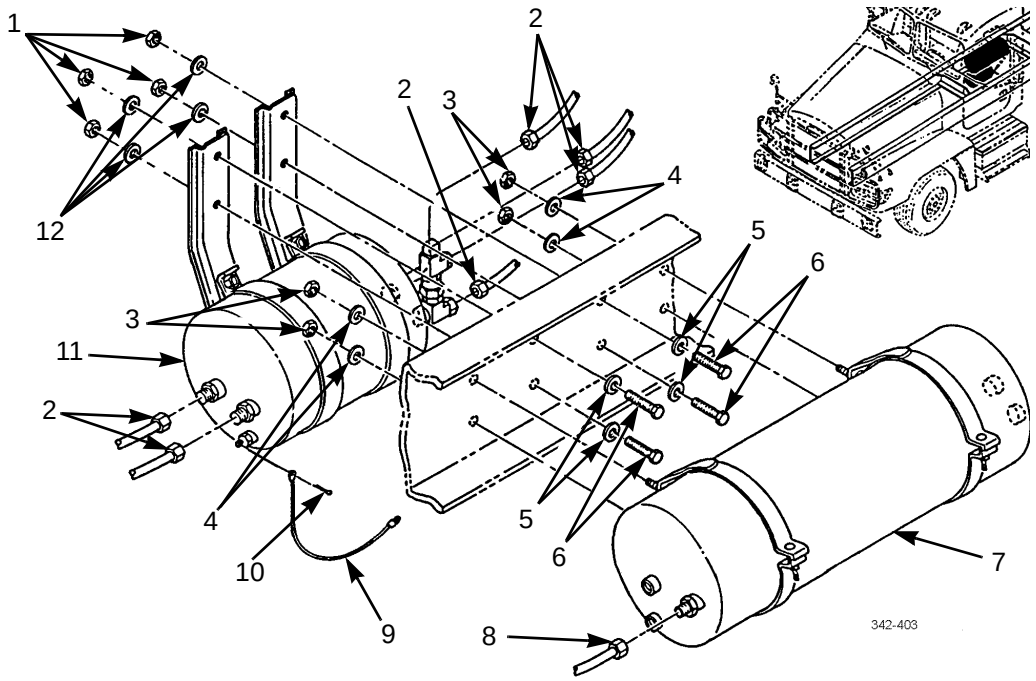

REMOVAL - CONTINUED

6. Remove five connectors (18), safety valve (16), elbow (19), two tees (17), bushing (20), check valve (21), tee (22), and drain valve (23) (M915A3 Old Model) from air supply tank (11).
7. For M915A3 New Model and M916A3, remove auto drain valve (WP 0171 00).
8. Remove two screws (13), washers (14), and mounting brackets (15) from air supply tank (11).

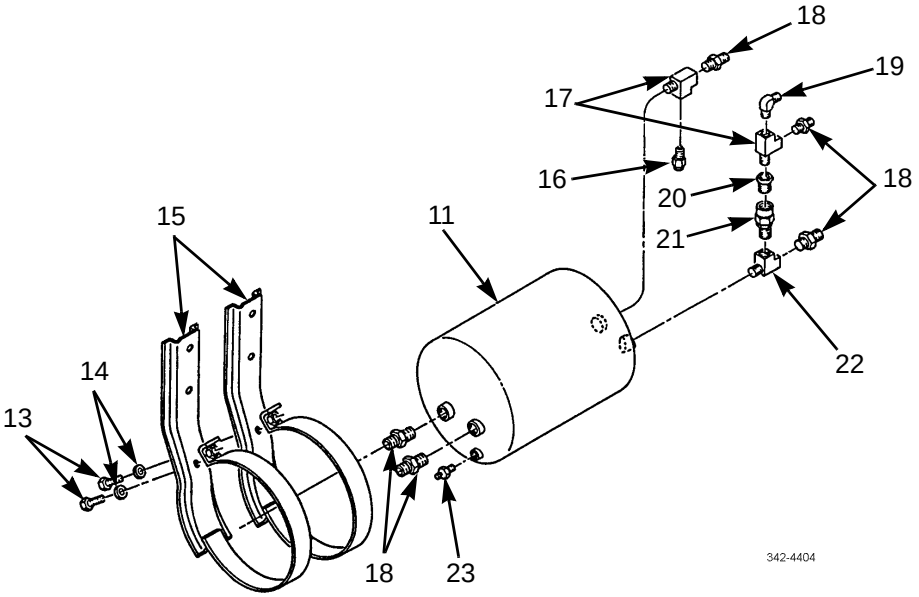

INSTALLATION

1. Install two mounting brackets (15), washers (14), and screws (13) on air supply tank (11).

WARNING

- Adhesives and sealing compounds can burn easily, can give off harmful vapors, and are harmful to skin and clothing. To avoid injury or death, keep away from open fire and use in a well-ventilated area. If adhesives or sealing compound gets on skin or clothing, wash immediately with soap and water.
- Ensure all air lines and fittings are clear of debris and excess pipe sealing compound does not enter air lines or fittings. Failure to follow this warning could result in injury to personnel or damage to equipment.

2. For M915A3 New Model and M916A3, install auto drain valve (WP 0171 00).
3. Coat pipe threads of drain valve (23) (M915A3 Old Model), tee (22), check valve (21), bushing (20), two tees (17), elbow (19), safety valve (16), and five connectors (18) with pipe sealing compound.
4. Install drain valve (23), tee (22), check valve (21), bushing (20), two tees (17), elbow (19), safety valve (16), and five connectors (18) in air supply tank (11).
5. Install air supply tank (11), four washers (5), screws (6), washers (12) and new locknuts (1).
6. Connect cable (9) and install new cotter pin (10).

INSTALLATION - CONTINUED

7. Install primary I air tank (7), four washers (4) and new locknuts (3).
8. Connect tube (8) to primary I air tank (7).
9. Connect six tubes (2) to air supply tank (11).

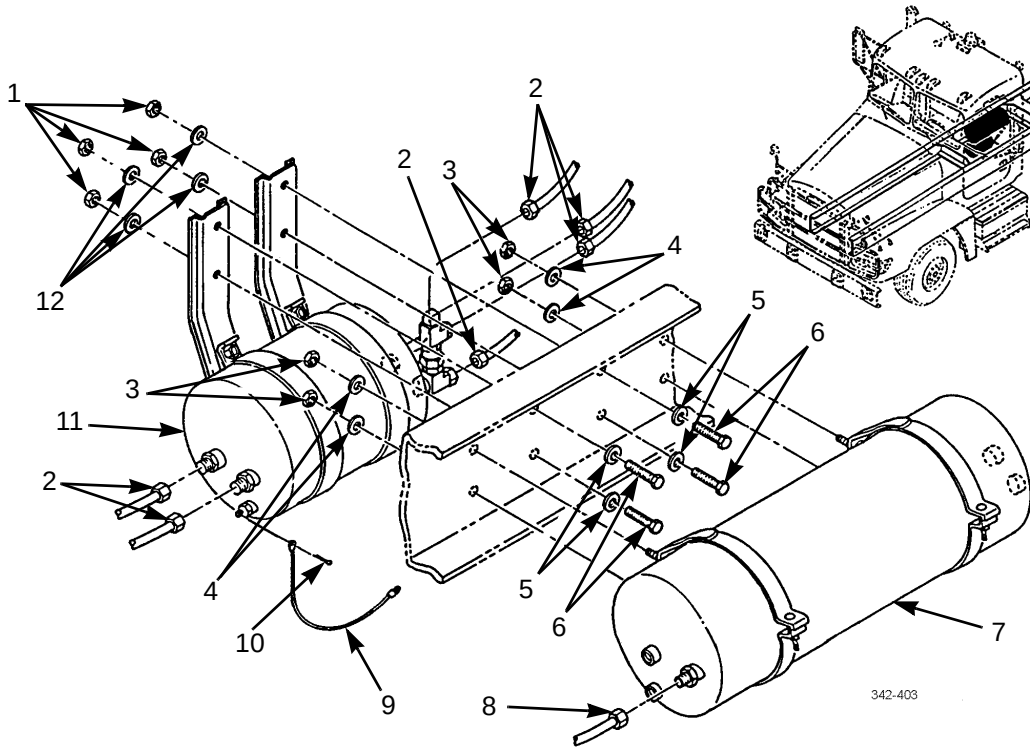

10. Start vehicle and build air pressure (TM 9-2320-302-10). Check for leaks.
11. Install rear platform (M915A3) (WP 0261 00) or chassis guard screen (M916A3) (WP 0262 00).

END OF WORK PACKAGE

PRIMARY I AND AIR SUPPLY TANK AND FITTINGS REPLACEMENT (M917A2) 0187 00

THIS WORK PACKAGE COVERS

Removal, Installation

INITIAL SETUP

Tools and Special Tools

Tool kit, general mechanic's (Item 50, WP 0306 00)

Goggles, industrial (Item 14, WP 0306 00)

Materials/Parts

Compound, sealing, pipe (Item 13, WP 0305 00)

Tags, marker (Item 34, WP 0305 00)

References

WP 0171 00

Equipment Conditions

Air system drained (TM 9-2320-302-10)

NOTE

- Both air tanks are removed in the same manner.
- Tag tubes to aid in installation.

REMOVAL

WARNING

- DO NOT disconnect any air system lines or fittings unless vehicle engine is shut down and air system pressure is relieved. Failure to follow this warning could result in serious injury to personnel.
- Always wear eye protection when disconnecting air lines. Residual air will be expelled. Failure to follow this warning may result in serious eye injury.

NOTE

R/H tank has two tubes (1) and two elbows (11).

1. Disconnect four tubes (1) from two adapters (2).
2. Remove four elbows (11) from two adapters (2).
3. Remove two adapters (2) from air tank (6).
4. Remove auto drain valve (WP 0171 00).
5. Remove two plugs (8).
6. Loosen two nuts (9) and remove air tank (7) from bracket (6).
7. Remove four nuts (3), eight washers (5), four bolts (4), and bracket (6) from frame (10).

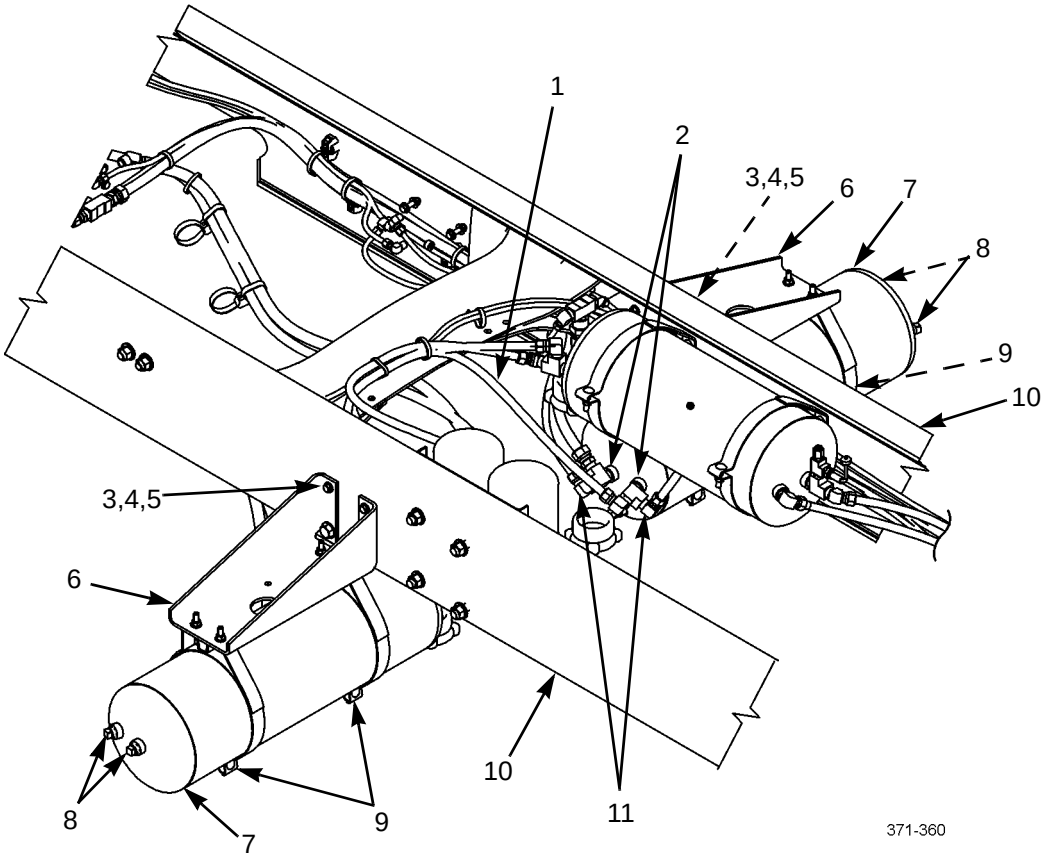

INSTALLATION


WARNING

- Adhesives and sealing compounds can burn easily, can give off harmful vapors, and are harmful to skin and clothing. To avoid injury or death, keep away from open fire and use in a well-ventilated area. If adhesive or sealing compound contacts skin or clothing, wash immediately with soap and water.
- Ensure that all air lines and fittings are clear of debris and excess pipe sealing compound does not enter air lines or fittings. Failure to follow this warning could result in injury to personnel and damage to equipment.

1. Install bracket (6) on frame (10) with four bolts (4), eight washers (5), and four nuts (3).
2. Install air tank (7) on bracket (5) and tighten two nuts (8).
3. Install auto drain valve (WP 0171 00).
4. Coat threads of two adapters, two elbows, and two plugs with pipe sealing compound.
5. Install two plugs (8) on air tank (7).
6. Install two adapters (2) on air tank (7).

NOTE

R/H tank has two tubes (1) and two elbows (11).

7. Install two elbows (11) on two adapters (2).
8. Connect four air tubes (1).
9. Start vehicle and build air pressure (TM 9-2320-302-10). Check for leaks.

END OF WORK PACKAGE

AIR TUBE REPLACEMENT 0188 00

THIS WORK PACKAGE COVERS

Removal, Installation

INITIAL SETUP

Maintenance Level

Unit

Tools and Special Tools

Tool kit, general mechanic's (Item 102, WP 0333 00)

Materials/Parts

Compound, sealing, pipe (Item 17, WP 0332 00)

Straps, tiedown (Item 41, WP 0332 00)

Tags, marker (Item 42, WP 0332 00)

References

WP 0326 00

Equipment Condition

Air system drained (TM 9-2320-303-10)

REMOVAL

NOTE

- Some air tubes use conventional compression fittings with tube nuts. Other air tubes use plastic push-in fittings. To replace push-in fittings, refer to instructions in *General Maintenance Instructions*, WP 0299 00.
- For location of air tubes, refer to Table 1, Air Tube Locator Table.
- Tag all air tubes and fittings to aid in installation.
- Remove and discard plastic tiedown straps. Install new tiedown straps.
- When replacing air tube, remove tube from vehicle and cut new tube 1/4-1/2 in (6.4 - 12.7 mm) longer than old air tube.

REMOVAL - CONTINUED

1. Remove nut (2) from fitting (5).
2. Remove air tube (1) from fitting (5).

NOTE

If insert remains in fitting, do not remove. Cut air tube to remove ferrule.

3. Remove insert (4), ferrule (3), and nut (2) from air tube (1). Discard ferrule.

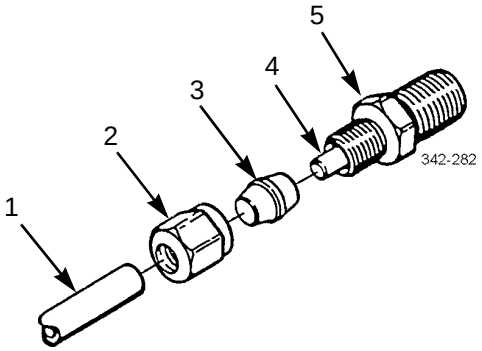

INSTALLATION

1. Position nut (2), new ferrule (3), and insert (4) on air tube (1).

WARNING

- Adhesives and sealing compounds can burn easily, can give off harmful vapors, and are harmful to skin and clothing. To avoid injury or death, keep away from open fire and use in a well-ventilated area. If adhesives or sealing compound contact skin or clothing, wash immediately with soap and water.
- Ensure all air lines and fittings are clear of debris and excess pipe sealing compound does not enter air lines or fittings. Failure to follow this warning could result in injury to personnel and damage to equipment.

2. Lightly coat threads of fitting (5) with pipe sealing compound. Install fitting on air tube (1).
3. Install nut (2) on fitting (5).
4. Start vehicle and build air pressure (TM 9-2320-302-10). Check for leaks.

Table 1. Air Tube Locator Table.

TUBE NO.	FROM	FROM/TO	TO
001	Foot Brake Valve, D2 (1)		Quick Release Valve (2)
002	Quick Release Valve (2)		ABS Solenoid Valve (3)
003	ABS Solenoid Valve (3)		Front Brake Chamber (4)

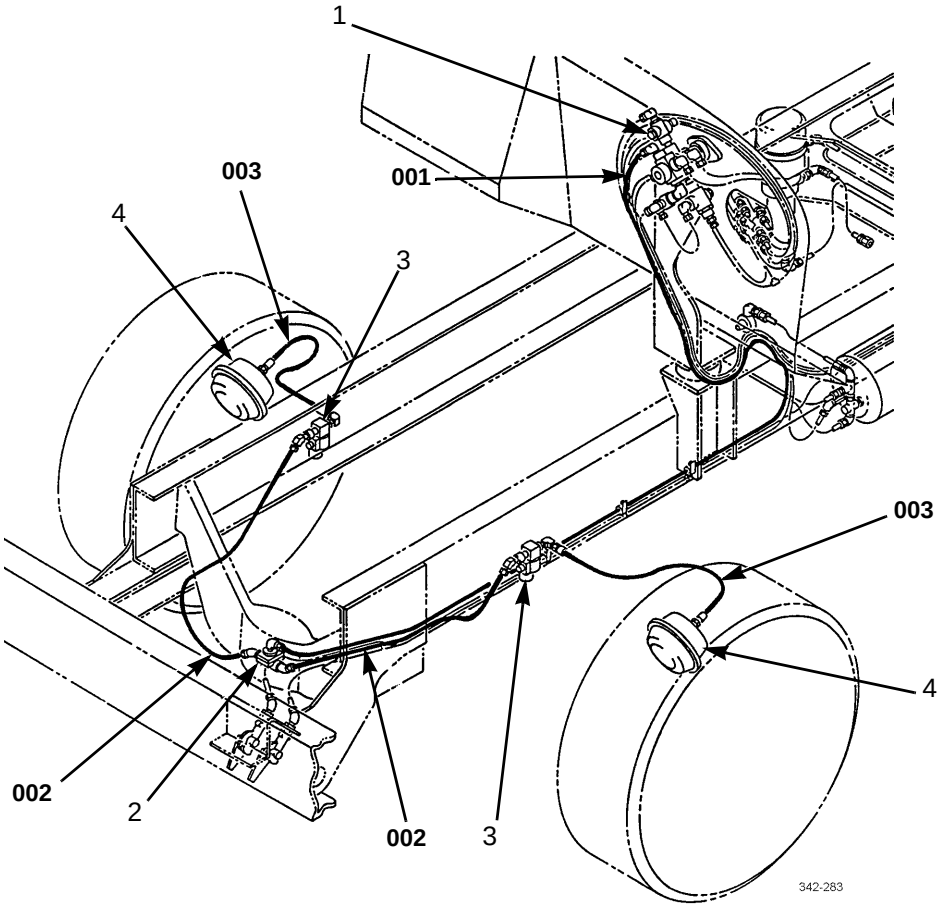

Table 1. Air Tube Locator Table - Continued.

TUBE NO.	FROM	FROM/TO	TO
004	Foot Brake Valve, D2 (1)		Rear Relay Valve, SER (5)
005	Air Junction Block, No. 18 (6)		Rear Relay Valve, CONT (5)
006	Primary II Air Tank (7)		Rear Relay Valve, SUP (5)
007	Rear Relay Valve, DEL (5)		ABS Solenoid Valve (8)
008	ABS Solenoid Valve (8)		Rear Brake Chamber (9)

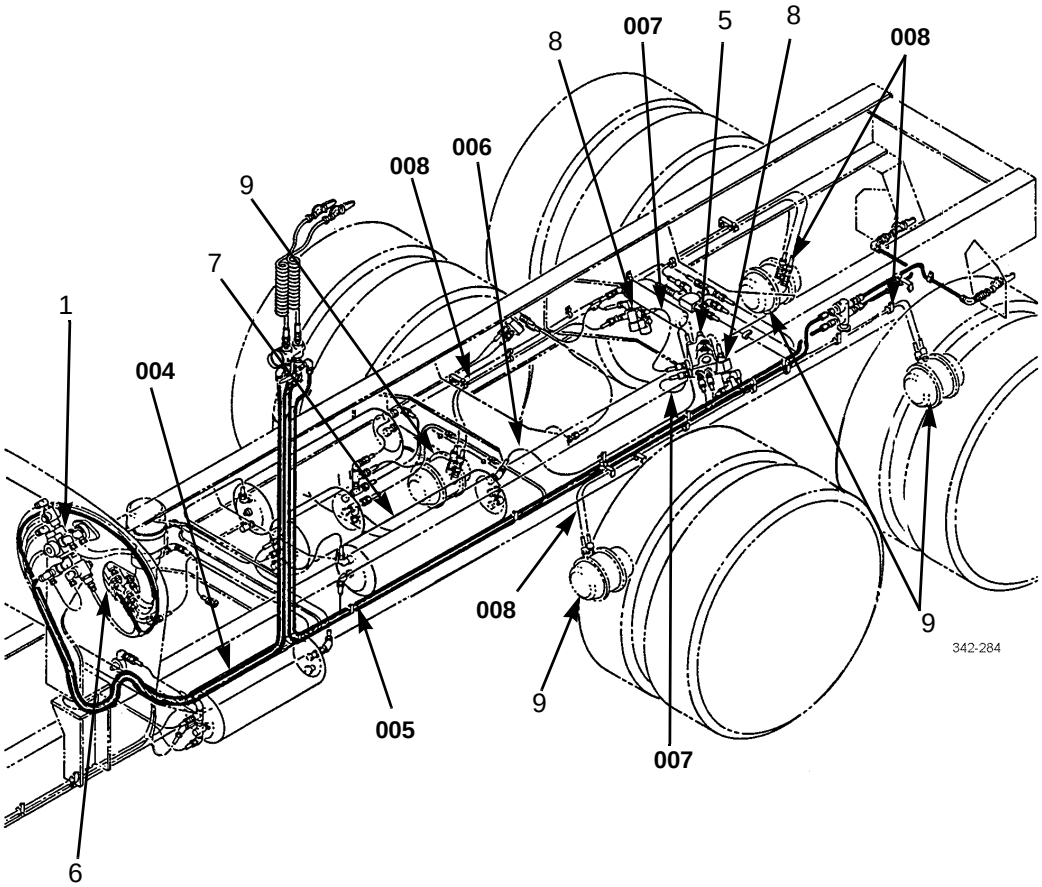

Table 1. Air Tube Locator Table - Continued.

TUBE NO.	FROM	FROM/TO	TO
009	Air Junction Block, No. 18 (6)		Tractor Protection Valve, E (10)
010	Foot Brake Valve, D2 (1)		Tractor Protection Valve, S (10)
011	Tractor Protection Valve, E (10)		Rear Protection Valve, E (11)
012	Tractor Protection Valve, S (10)		Rear Protection Valve, S (11)
013	Rear Protection Valve, E (11)		Emergency Gladhand (12)
014	Rear Protection Valve, S (11)		Service Gladhand (13)

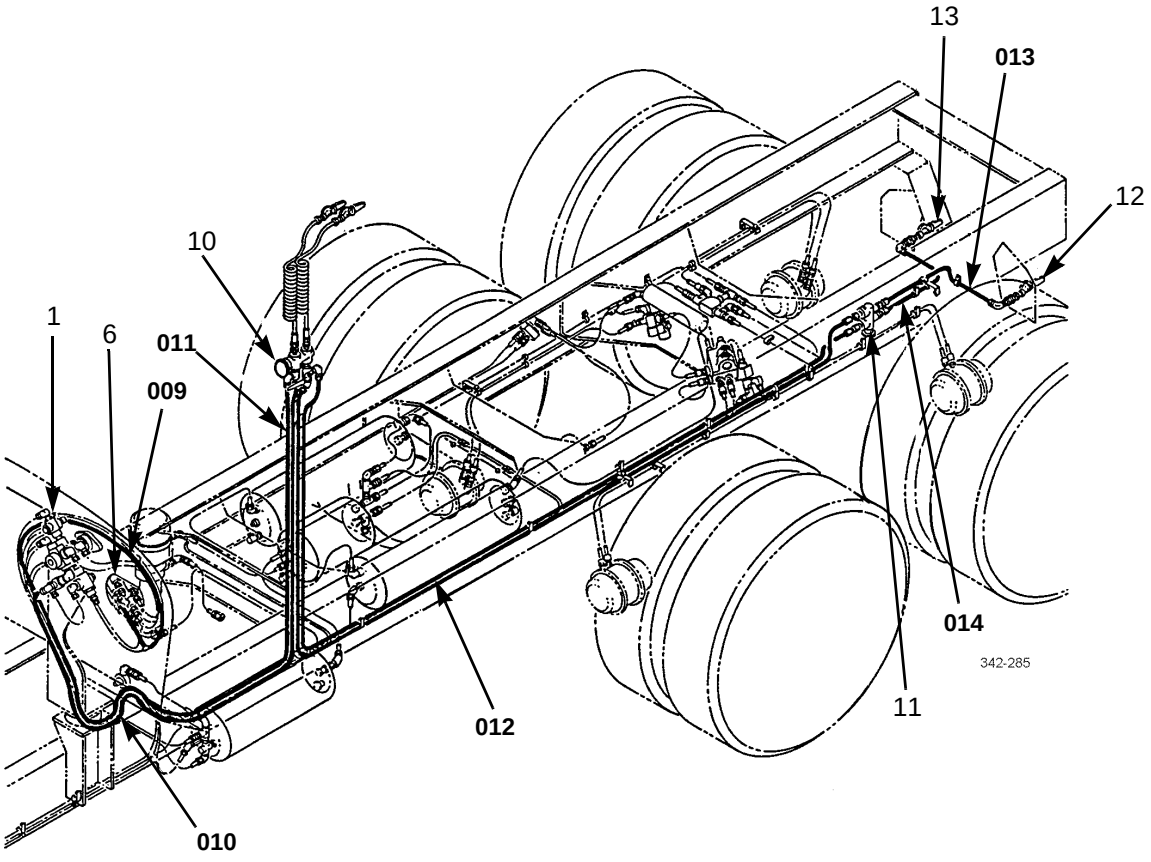

Table 1. Air Tube Locator Table - Continued.

TUBE NO.	FROM	FROM/TO	TO
015	Rear Quick Release Valve (14)		Rear Brake Chamber (9)
016	Rear Quick Release Valve (14)		Supply Air Tank (15)
017	Rear Quick Release Valve (14)		Air Junction Block, No. 21 (6)

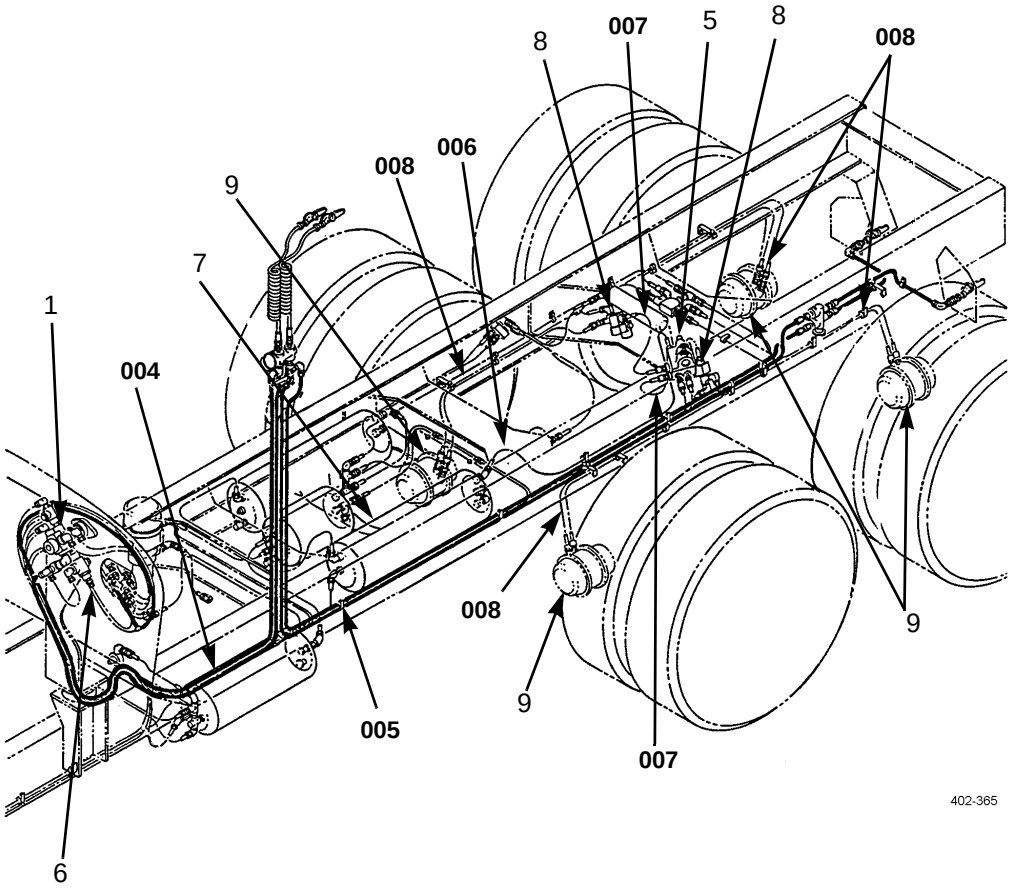

Table 1. Air Tube Locator Table - Continued.

TUBE NO.	FROM	FROM/TO	TO
018	Air Junction Block, No. 17 (6)		Foot Brake Valve, D1 (1)
019	Air Junction Block, No. 19 (6)		Foot Brake Valve, D2 (1)
020	Air Junction Block, No. 13 (6)		Foot Brake Valve, S1 (1)
021	Air Junction Block, No. 22 (6)		Foot Brake Valve, S2 (1)

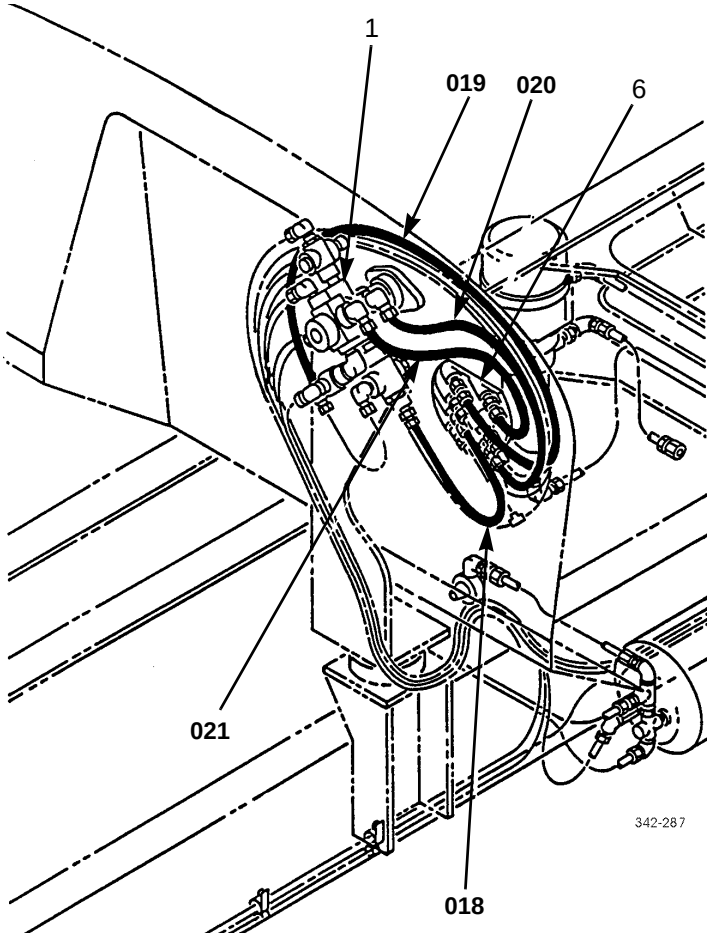

Table 1. Air Tube Locator Table - Continued.

TUBE NO.	FROM	FROM/TO	TO
022	Air Compressor (16)		Air Dryer (17)
023	Air Compressor (16)		Air Dryer (17)
024	Air Compressor (16)		Supply Air Tank (15)
025	Air Dryer (17)		Supply Air Tank (15)

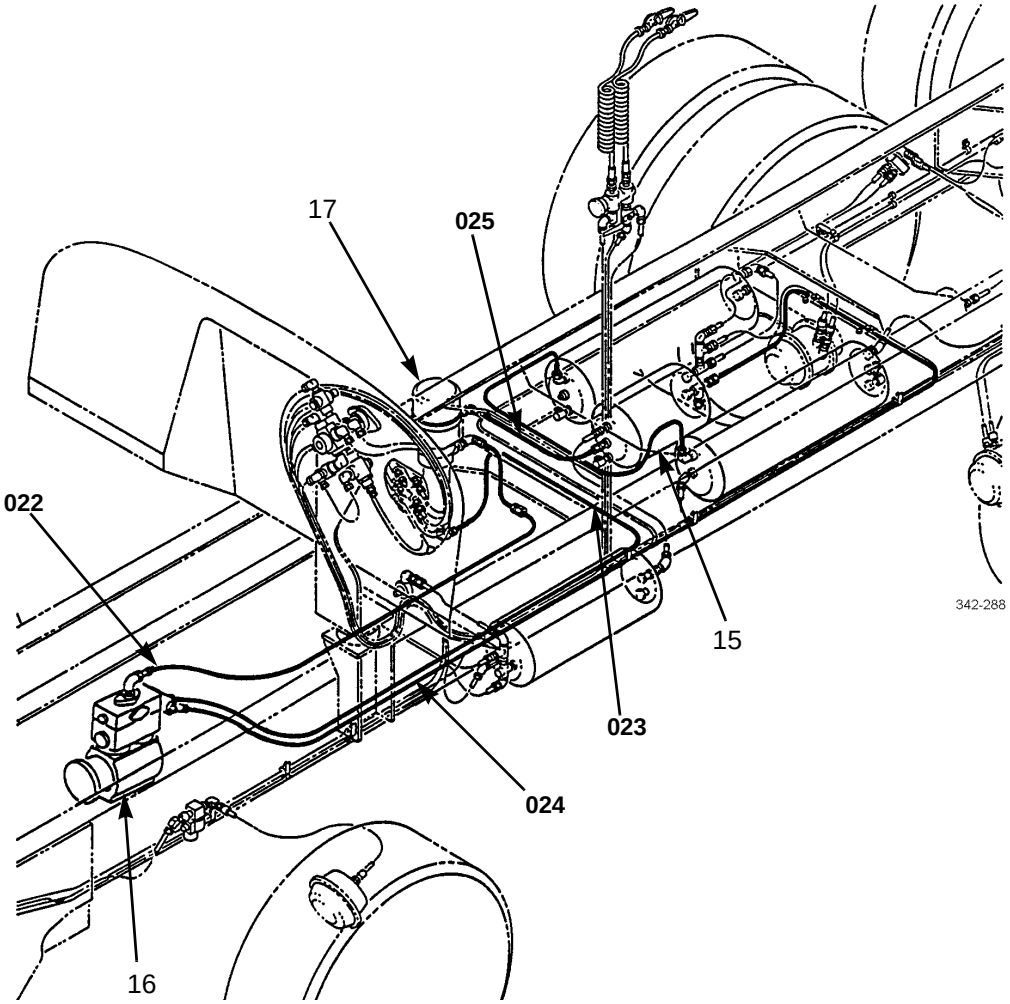

Table 1. Air Tube Locator Table - Continued.

TUBE NO.	FROM	FROM/TO	TO
026	Secondary Air Tank (18)		Foot Brake Valve (1)
027	Primary II Air Tank (7)		Foot Brake Valve (1)
028	Primary II Air Tank (7)		Primary I Air Tank (19)
029	Supply Air Tank (15)		Secondary Air Tank (18)
030	Supply Air Tank (15)		Primary I Air Tank (19)

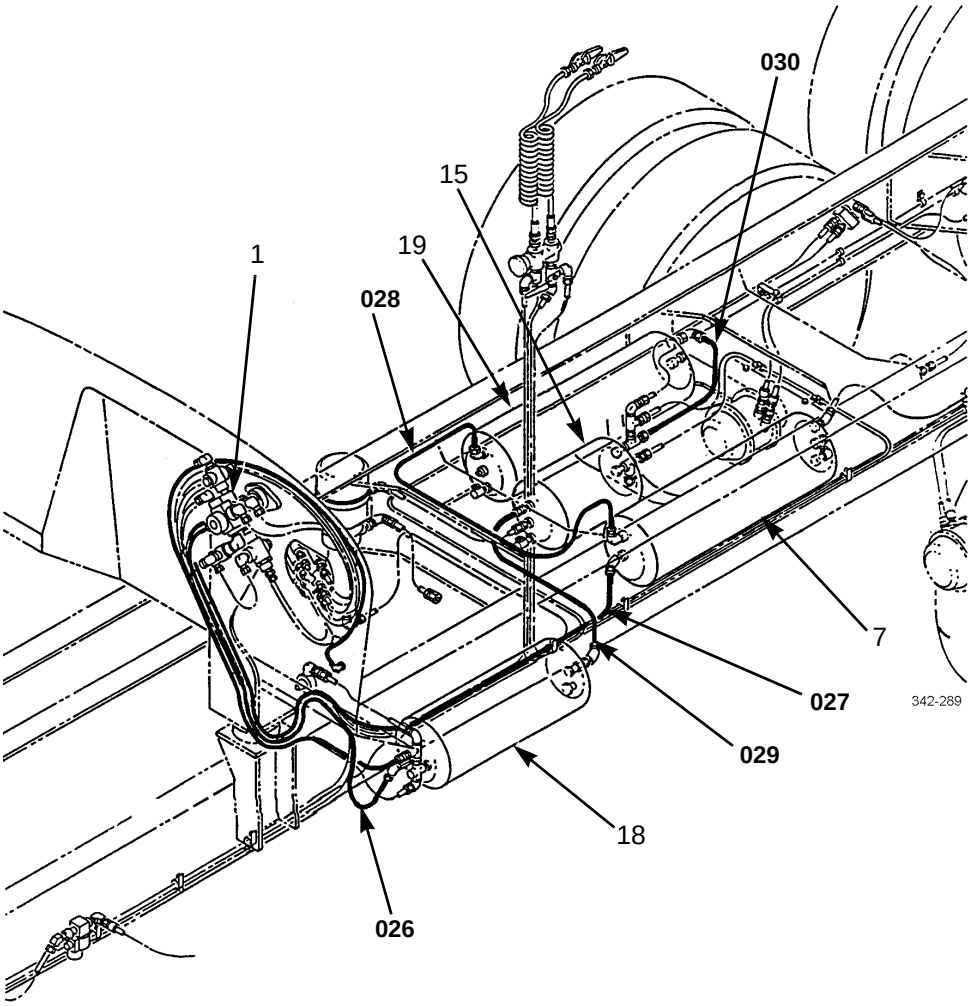

Table 1. Air Tube Locator Table - Continued.

TUBE NO.	FROM	FROM/TO	TO
031	Secondary Air Tank (18)		Firewall (20)
032	Fifth Wheel (21) (M915A3)	Junction Block	Firewall (20)
033	Axle Interlock (22) (M915A3)	Junction Block	Firewall (20)
034	Front Service Gladhand (23)		Foot Brake Valve (1)
035	Front Emergency Gladhand (24)		Supply Air Tank (15)

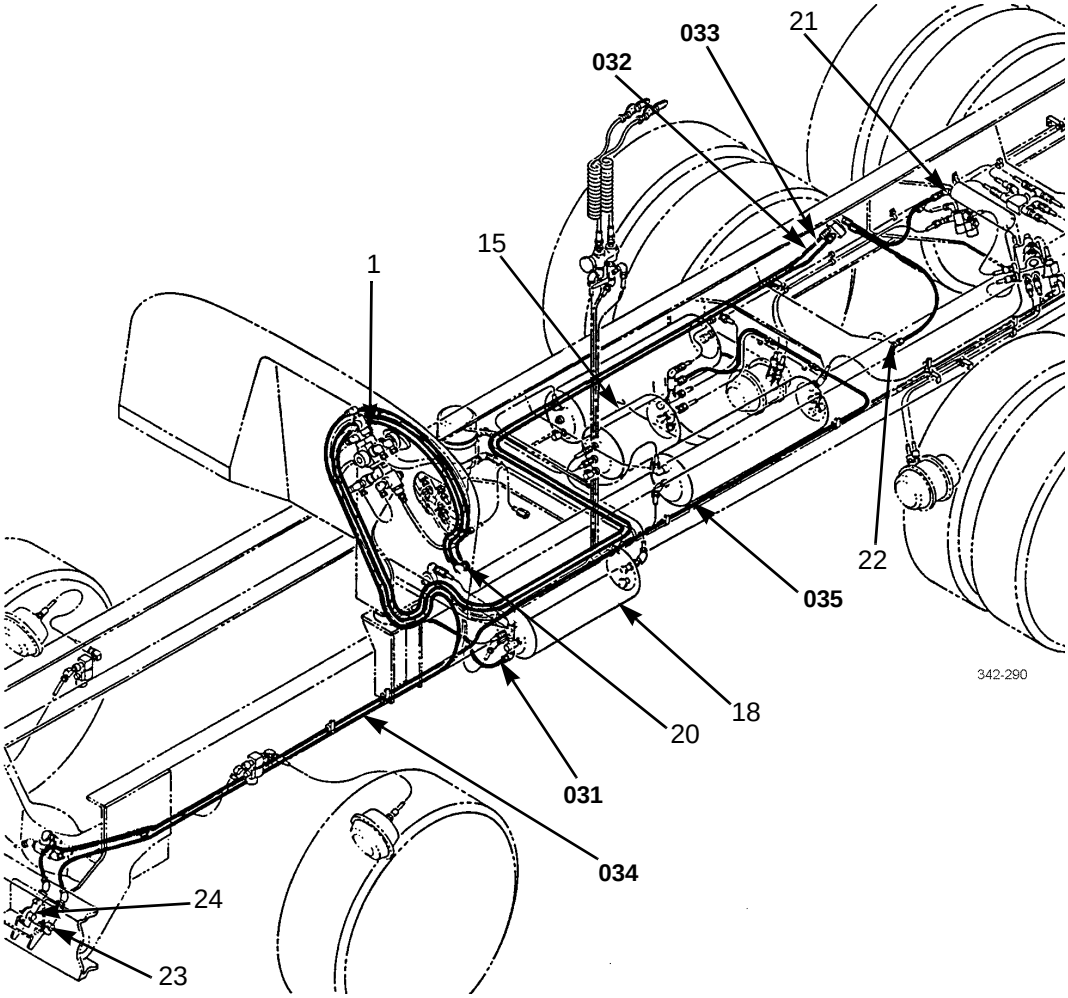

Table 1. Air Tube Locator Table - Continued.

TUBE NO.	FROM	FROM/TO	TO
036	Air Junction Block, No. 15 (6)		Primary Air Pressure Gage (25)
037	Air Junction Block, No. 11 (6)		Secondary Air Pressure Gage (26)
038	Firewall Tee (27)		Constant Air Junction Block (28)

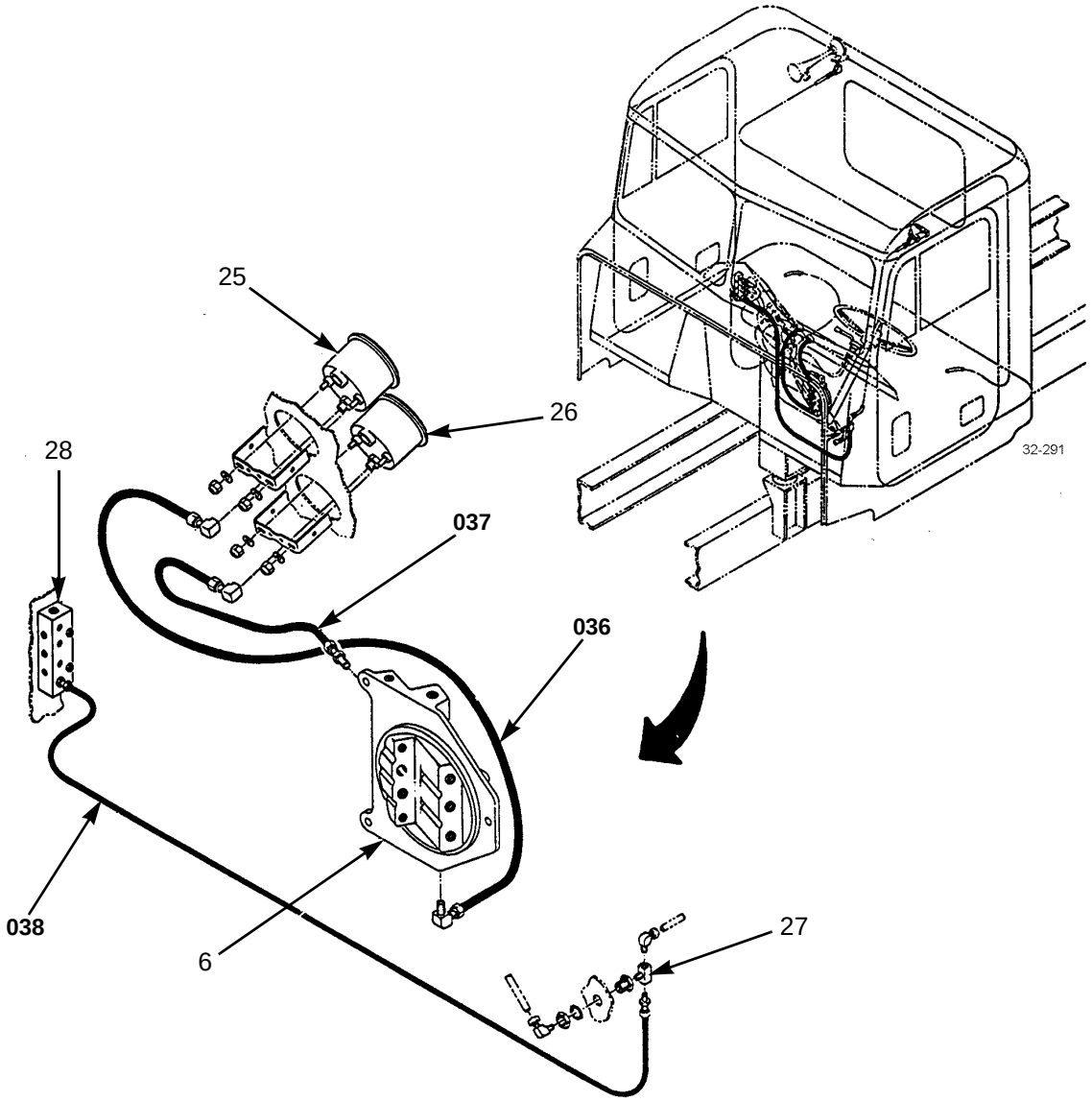

Table 1. Air Tube Locator Table - Continued.

TUBE NO.	FROM	FROM/TO	TO
039	Firewall Tee (27)		Air Horn Tee (29)
040	Air Horn Tee (29)		Driver Seat Air Cylinder (30)
041	Air Horn Tee (29)	Air Horn Valve (31)	Air Horn (32)
042	Constant Air Junction Block (28)		Passenger Seat Air Cylinder (33)

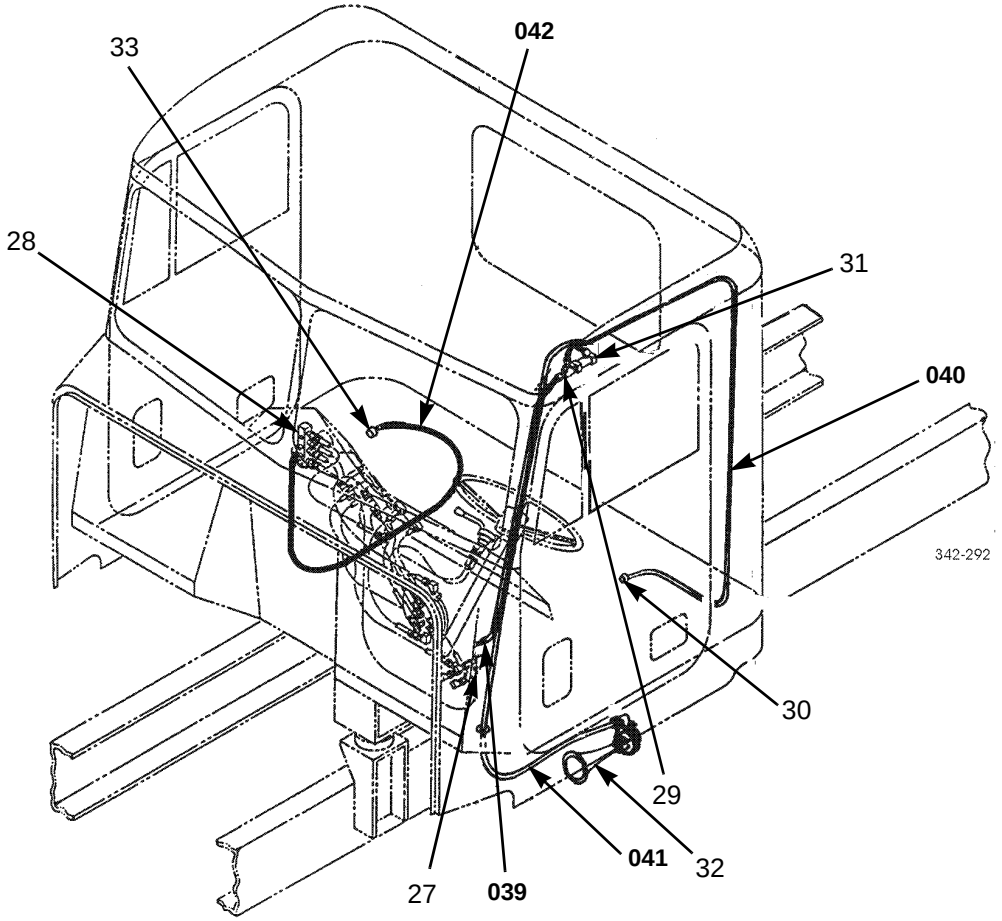

Table 1. Air Tube Locator Table - Continued.

TUBE NO.	FROM	FROM/TO	TO
043	Constant Air Junction Block (28)		Passenger Seat Air Cylinder (34)
044	Constant Air Junction Block (28)		Interaxle Lockup Valve (35)
045	Interaxle Lockup Valve (35) (M915A3)		Firewall Fitting, No. 1 (36)
046	Constant Air Junction Block (28)		Fifth Wheel Slide Valve (37)
047	Fifth Wheel Slide Valve (37) (M915A3)		Firewall Fitting, No. 2 (38)

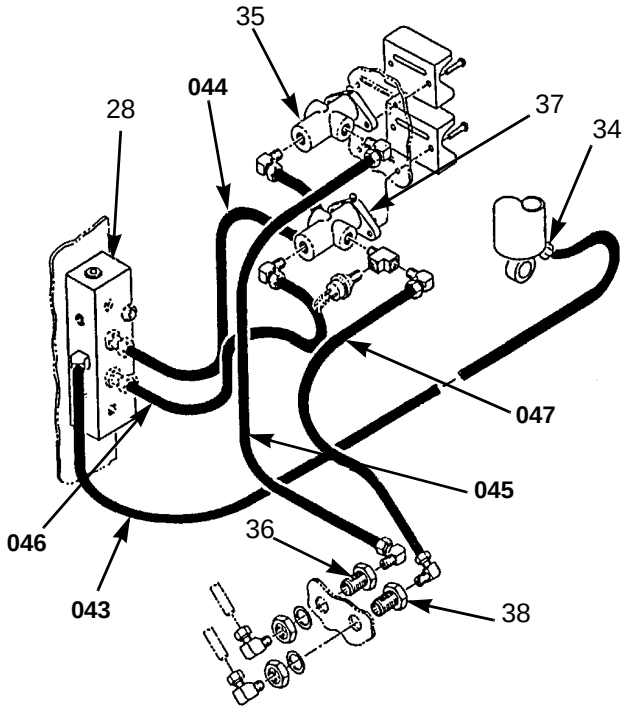

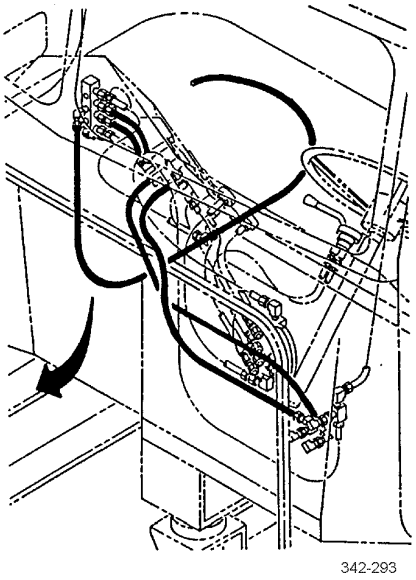

Table 1. Air Tube Locator Table - Continued.

TUBE NO.	FROM	FROM/TO	TO
048	Air Junction Block, No. 14 (6)		Parking Brake/Trailer Air Supply, S1 (39)
049	Air Junction Block, No. 9 (6)		Parking Brake/Trailer Air Supply, S2 (39)
050	Parking Brake/Trailer Air Supply, DEL TRC (39)		Air Junction Block, No. 12 (6)
051	Parking Brake/Trailer Air Supply, DEL TRL (39)		Air Junction Block, No. 4 (6)
052	Parking Brake/Trailer Air Supply, EXH (39)	Firewall	Not Connected

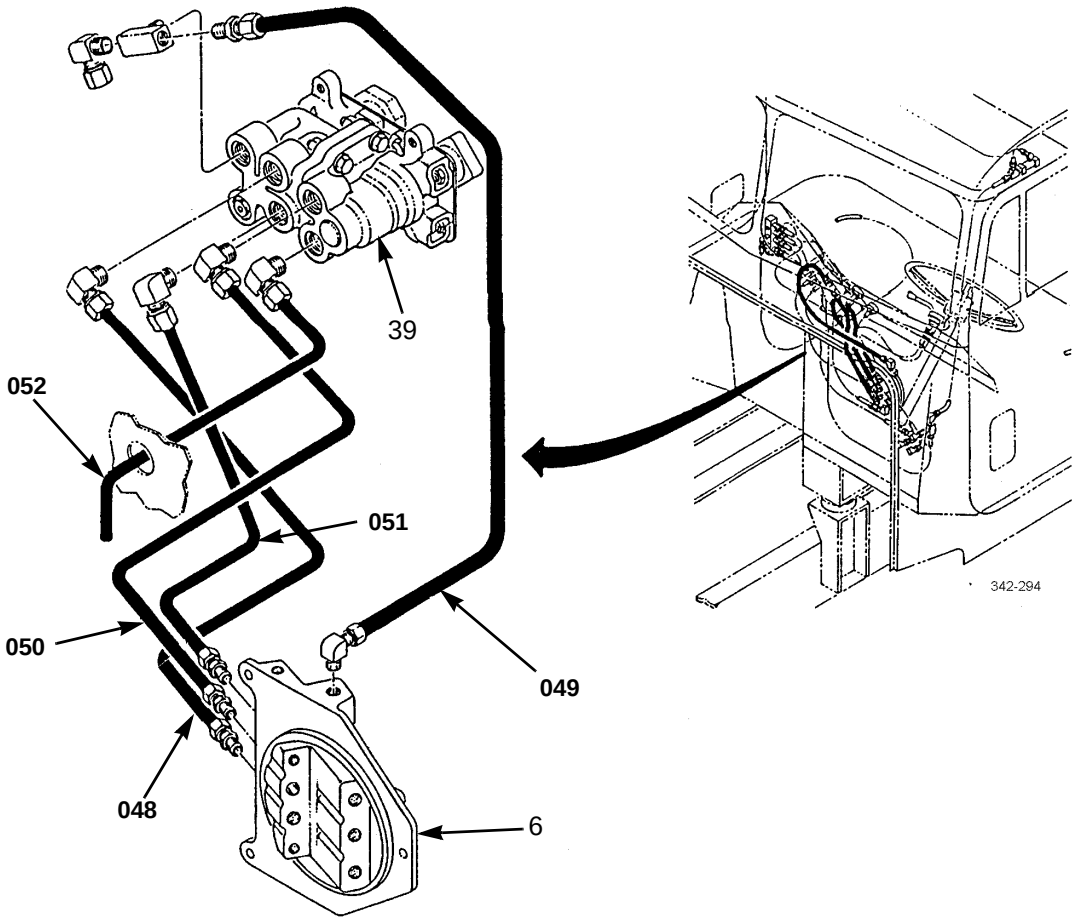

Table 1. Air Tube Locator Table - Continued.

TUBE NO.	FROM	FROM/TO	TO
053	Parking Brake/Trailer Air Supply, S2 (39)		Trailer Hand Brake, S (40)
054	Trailer Hand Brake, D (40)		Air Junction Block, No. 5 (6)
055	Trailer Hand Brake, E (40)	Firewall	Not Connected

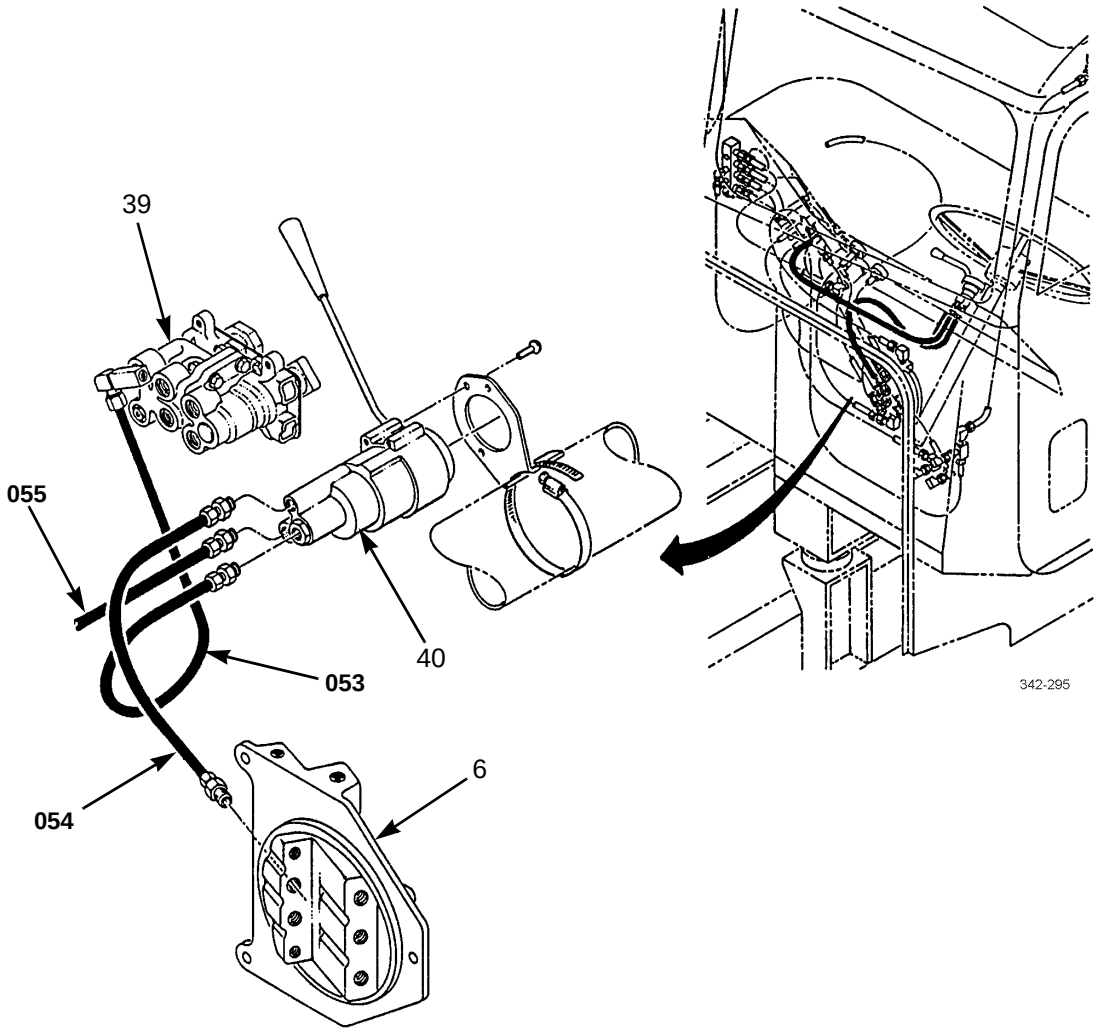

END OF WORK PACKAGE

AIR TUBE REPLACEMENT (M917A2) 0189 00

THIS WORK PACKAGE COVERS

Removal, Installation

INITIAL SETUP

Tools and Special Tools

Tool kit, general mechanic's (Item 50, WP 0306 00)

Materials/Parts

Compound, sealing, pipe (Item 13, WP 0305 00)

Tags, marker (Item 34, WP 0305 00)

References

WP 0188 00

WP 0299 00

Equipment Condition

Air system drained (TM 9-2320-302-10)

NOTE

This task covers air tubes unique to M917A2 and M917A2 w/MCS vehicles. Included are air tubes for CTIS, MCS, tailgate release, air dryer, and air horn. Refer to WP 0188 00 for replacement of air tubes (e.g. brakes) that are the same as the M916A3.

REMOVAL

NOTE

- Some air tubes use conventional compression fittings with tube nuts. Other air tubes use plastic push-in fittings. To replace push-in fittings, refer to instructions in *General Maintenance Instructions*, WP 0299 00.
- For location of air tubes, refer to Table 1, Air Tube Locator Table.
- Tag all air tubes and fittings to aid in installation.
- Remove and discard plastic tiedown straps. Install new tiedown straps.
- When replacing air tube, remove tube from vehicle and cut new tube 1/4-1/2 in (6.4 - 12.7 mm) longer than old air tube.

1. Remove nut (2) from fitting (5).
2. Remove air tube (1) from fitting (5).

NOTE

If insert remains in fitting, do not remove.

3. Remove insert (4), ferrule (3), and nut (2) from air tube (1).

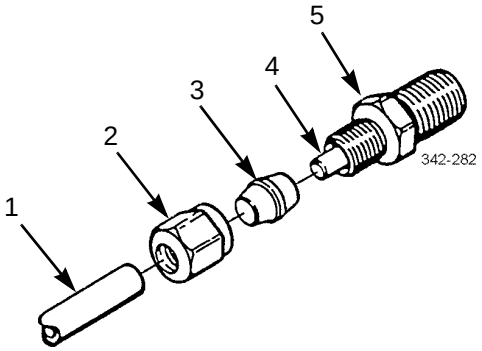

INSTALLATION

NOTE

Procedure is the same for all air tubes.

1. Install nut (2), ferrule (3), and insert (4) on air tube (1).


WARNING

- Adhesives and sealing compounds can burn easily, can give off harmful vapors, and are harmful to skin and clothing. To avoid injury or death, keep away from open fire and use in a well-ventilated area. If adhesives or sealing compound contact skin or clothing, wash immediately with soap and water.
- Ensure all air lines and fittings are clear of debris and excess pipe sealing compound does not enter air lines or fittings. Failure to follow this warning could result in injury to personnel and damage to equipment.

INSTALLATION - CONTINUED

CAUTION

Route air tube so that tube does not bend to radius smaller than allowed in Nylon Tube Bend Radius Table. If bent smaller than allowed, tube may kink causing loss of air pressure to component.

2. Coat threads of fitting (5) with pipe sealant compound and install air tube (1) in fitting (5).
3. Install nut (2) on fitting (5).
4. Start vehicle and check air system for leaks (TM 9-2320-302-10).

Table 1. Nylon Tube Bend Radius.

OUTSIDE DIAMETER		MINIMUM BEND RADIUS	
IN.	(MM)	IN.	(MM)
0.25	(6.40)	1.0	(25.0)
0.38	(9.50)	1.5	(38.0)
0.50	(13.00)	2.0	(51.0)
0.63	(17.00)	2.5	(64.0)
0.75	(19.00)	3.0	(76.0)

Table 2. Air Tube Locator.

TUBE NO.	FROM	FROM/TO	TO
001	Quick Release Valve (1)		Front Wheel Hub (2)
002	Quick Release Valve (1)		Tee (3)
003	Air Compressor (4)		Air Dryer (5)
004	Air Compressor Governor (6)		Air Dryer (5)
005	Air Dryer (5)		Air Supply Tank (7)

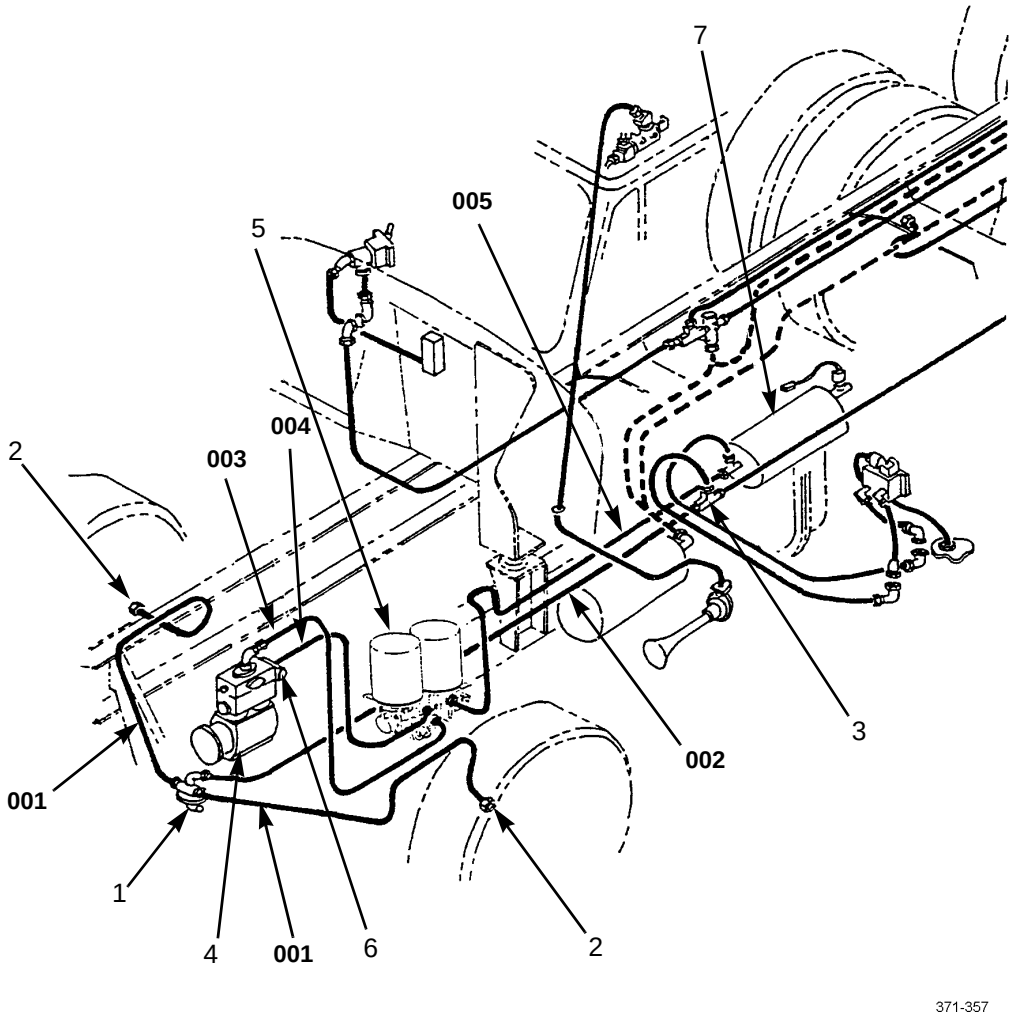

Table 2. Air Tube Locator - Continued.

TUBE NO.	FROM	FROM/TO	TO
006	Tailgate Release Valve (8)		Firewall (9)
007	Firewall (9)		Inversion Valve Tee (10)
008	Tailgate Release Valve (8)		Constant Air Junction Box (11)
009	Air Horn Valve (12)	Cab Floor (13)	Air Horn (14)
0010	Secondary Air Tank (15)		Inversion Valve (16), Supply Port
0011	Secondary Air Tank (15)		Material Handling Tee (17)
0012	Inversion Valve (16) Supply Port		Material Handling Tee (17)

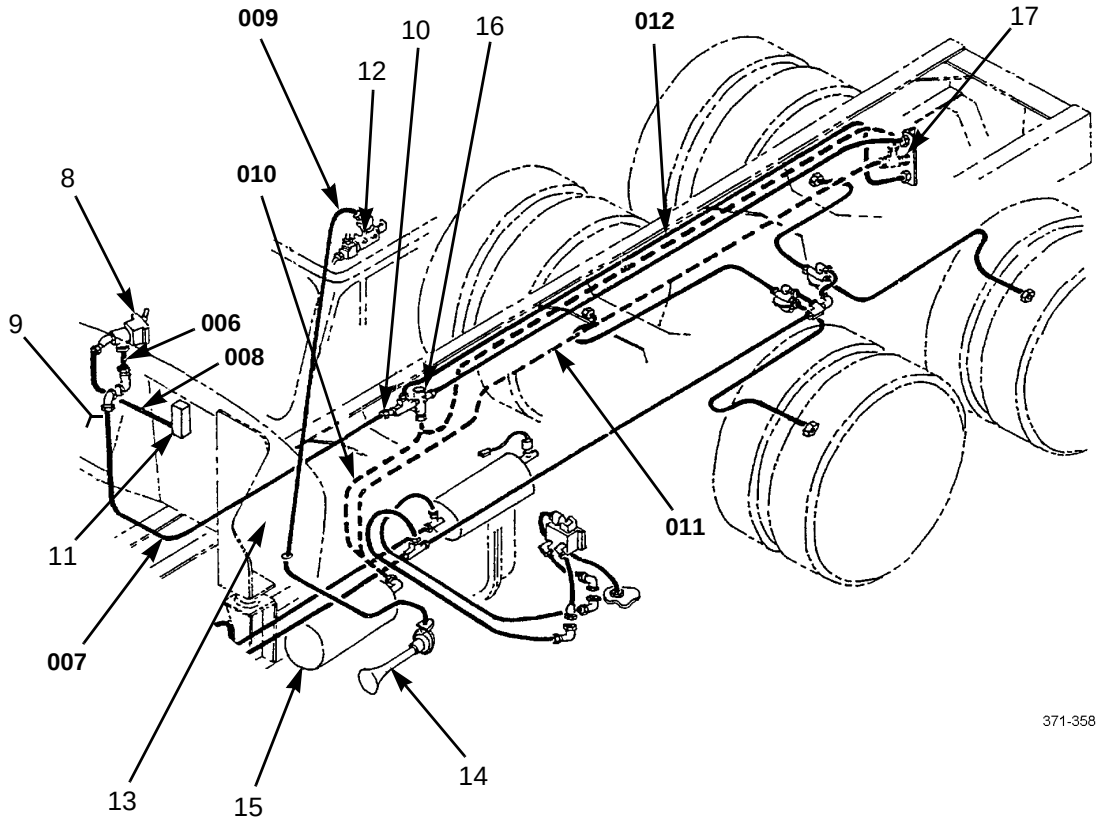

Table 2. Air Tube Locator - Continued.

TUBE NO.	FROM	FROM/TO	TO
0013	Inversion Valve Tee (10)		Tailgate Release Port (18)
0014	Inversion Valve (16), Delivery Port		Tailgate Lock Port (19)
0015	Pneumatic Control Valve Axle Port (20)		Cab Floor (13)
0016	Pneumatic Control Valve Supply Port (20)		Cab Floor (13)
0017	Pneumatic Control Valve Exhaust Port (20)		Cab Floor (13)
0018	Cab Floor (13)		Tee (3)
0019	Cab Floor (13)		Air Supply Tank (7)

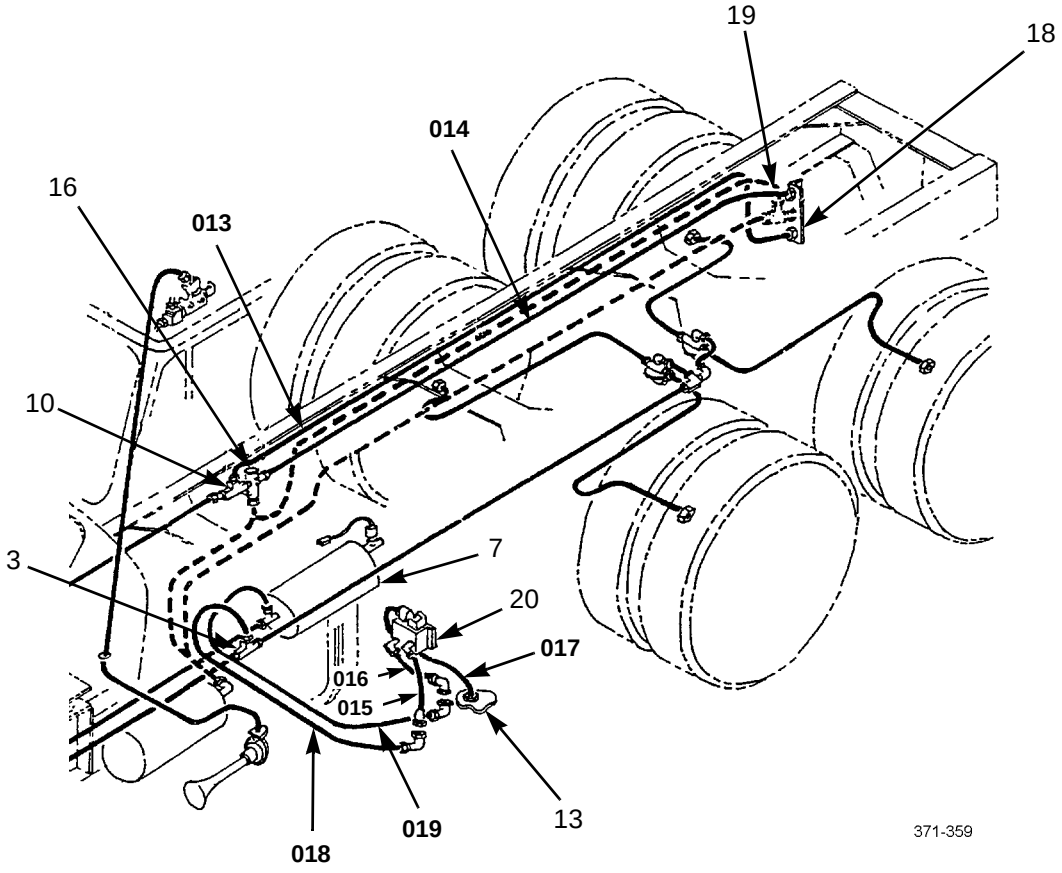

Table 2. Air Tube Locator - Continued.

TUBE NO.	FROM	FROM/TO	TO
0020	Tee (3)		Tee (12)
0021	Tee (21)		Quick Release Valve (22)
0022	Quick Release Valve (22)		Forward Rear Axle (23)
0023	Elbow (24)		Quick Release Valve (25)
0024	Quick Release Valve (25)		Rear Rear Axle (26)

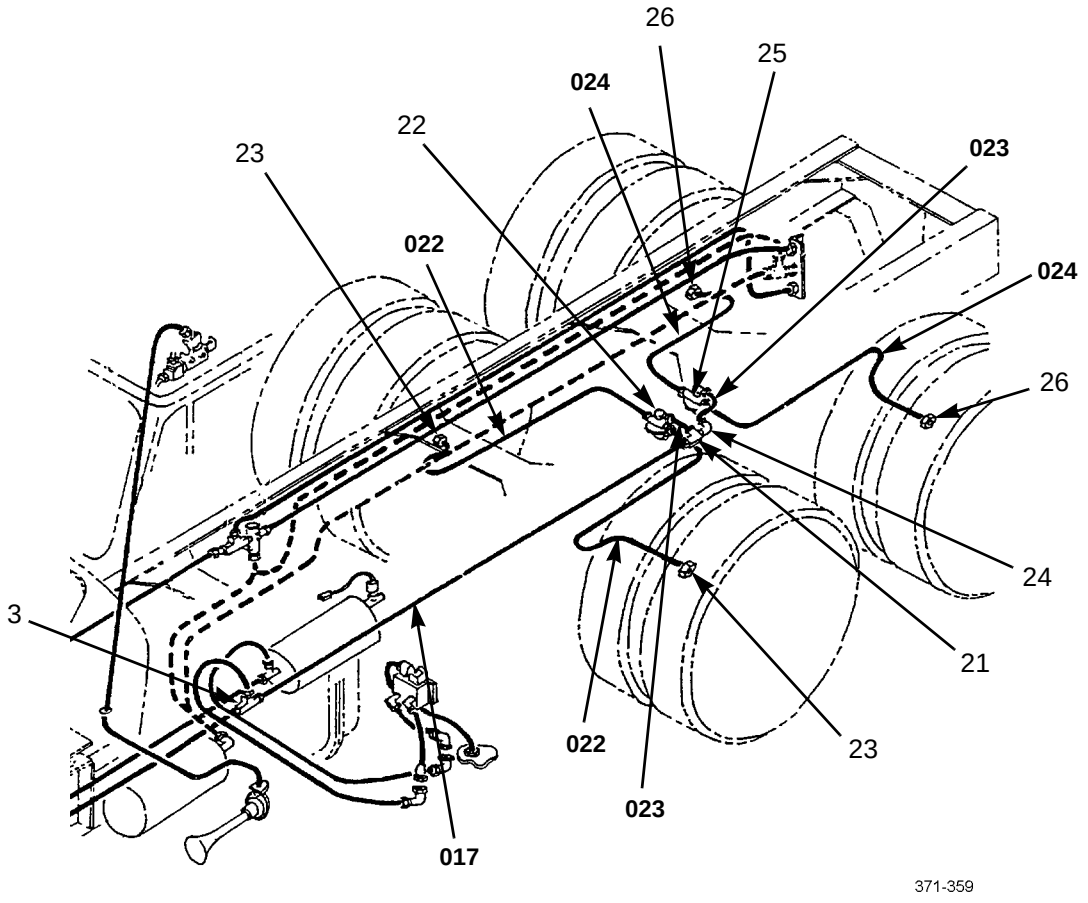

END OF WORK PACKAGE

CONSTANT AIR JUNCTION BLOCK REPLACEMENT 0190 00

THIS WORK PACKAGE COVERS

Removal, Installation

INITIAL SETUP

Tools and Special Tools

Tool kit, general mechanic's (Item 50, WP 0306 00)

Wrench set, socket attachment (Item 61, WP 0306 00)

Materials/Parts

Compound, sealing, pipe (Item 13, WP 0305 00)

Tags, marker (Item 34, WP 0305 00)

References

WP 0299 00

Equipment Condition

Air system drained (TM 9-2320-302-10)

NOTE

Refer to *General Maintenance Instructions* in WP 0299 00 for information on removing and installing air tubes with push-in fittings.

REMOVAL

1. Remove six torx screws (1), dash top cover (2), and five torx screws (3). Set instrument panel (4) aside.

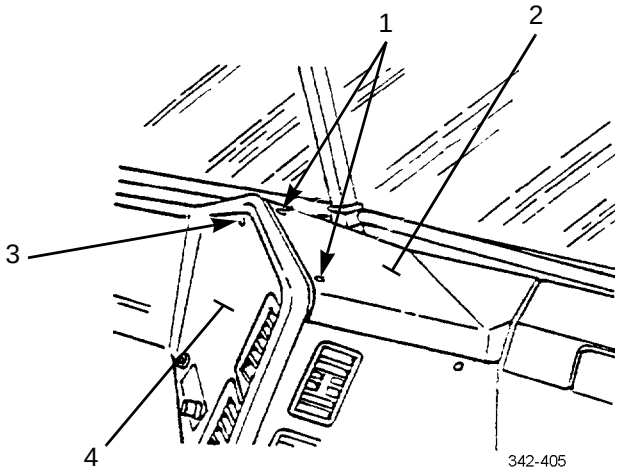

REMOVAL - CONTINUED

NOTE

Tag all tubes, connectors and plugs prior to disconnecting/removal to aid in installation/connecting.

2. Disconnect six tubes (11).

3. Remove two nuts (9), washers (6), screws (5), and constant air junction block (8).

4. Remove three connectors (10), connector (12), two elbows (13), and three plugs (7) from constant air junction block (8).

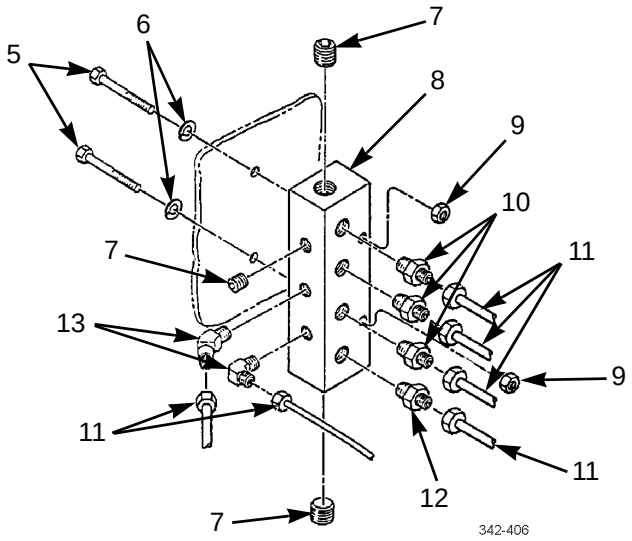

INSTALLATION


WARNINGS

- Adhesives and sealing compounds can burn easily, can give off harmful vapors, and are harmful to skin and clothing. To avoid injury or death, keep away from open fire and use in a well-ventilated area. If adhesives or sealing compound gets on skin or clothing, wash immediately with soap and water.

- Ensure all air lines and fittings are clear of debris and excess pipe sealing compound does not enter air lines or fittings. Failure to follow this warning could result in injury to personnel or damage to equipment.

1. Coat threads with pipe sealing compound and install three plugs (7), two elbows (13), three connectors (10), and connector (12) in constant air junction block (8).

INSTALLATION - CONTINUED

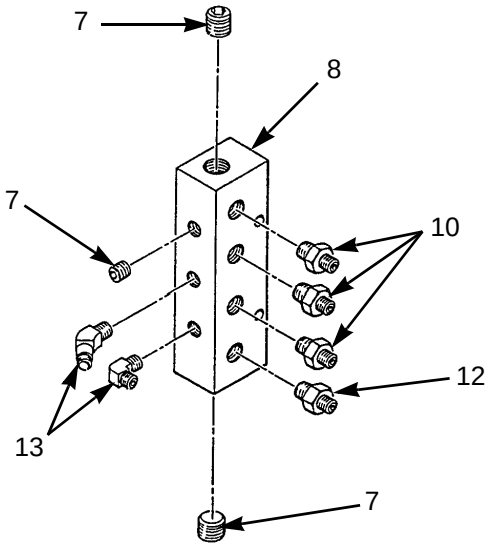

2. Install constant air junction block (8) with two screws (5), washers (6), and nuts (9).
3. Connect six tubes (11) to constant air junction block (8).

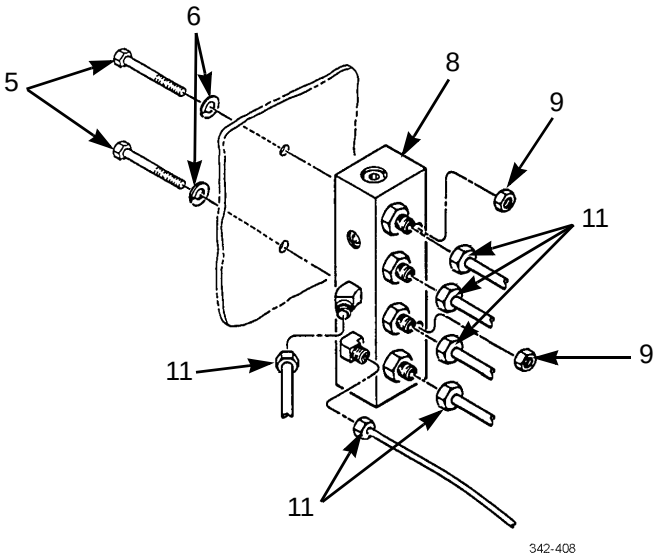

4. Start vehicle and build air pressure (TM 9-2320-302-10). Check for leaks.

INSTALLATION - CONTINUED

5. Position instrument panel (4) and install five torx screws (3), dash top cover (2), and six torx screws (1).

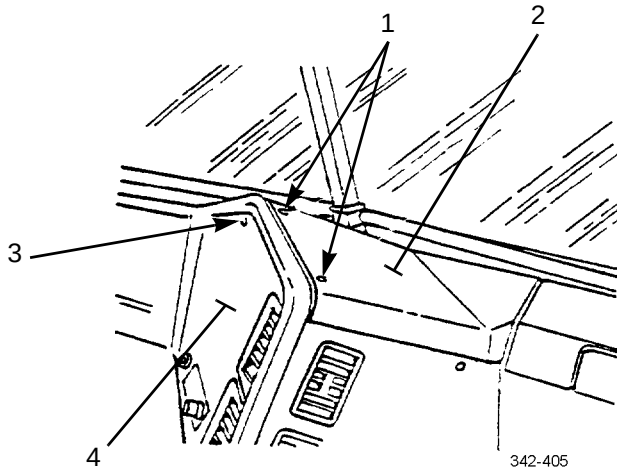

END OF WORK PACKAGE

CAB AIR JUNCTION BLOCK REPLACEMENT 0191 00

THIS WORK PACKAGE COVERS

Removal, Installation

INITIAL SETUP

Tools and Special Tools

Tool kit, general mechanic's (Item 50, WP 0306 00)

Materials/Parts

Compound, caulking (Item 10, WP 0305 00)

Compound, sealing, pipe (Item 13, WP 0305 00)

Tags, marker (Item 34, WP 0305 00)

Nut, lock (P/N 23-10340-125) (3)

References

TM 9-2320-302-10

WP 0299 00

Equipment Condition

Air system drained (TM 9-2320-302-10)

NOTE

Refer to *General Maintenance Instructions* in WP 0299 00 for information on removing and installing air tubes with push-in fittings.

REMOVAL

1. Remove five screws (1), washers (2), and cover (3).
2. Remove two screws (4) and cover (5).

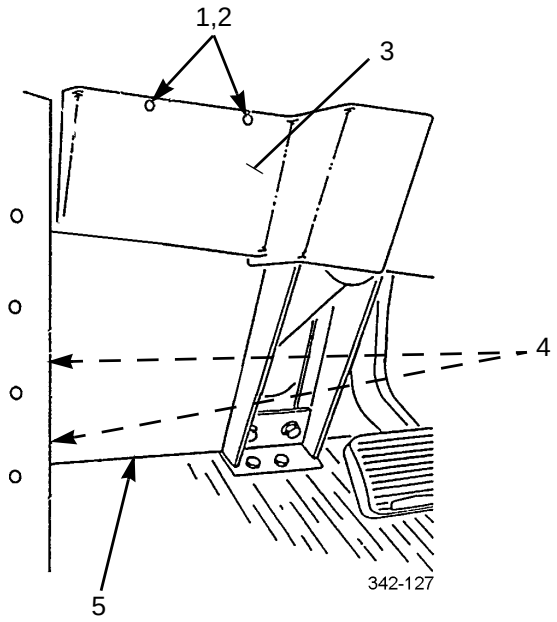

REMOVAL - CONTINUED

NOTE

Tag all tubes, fittings, and wires to aid in installation.

3. Disconnect six tubes (6) and oil line (7) from cab air junction block (8).

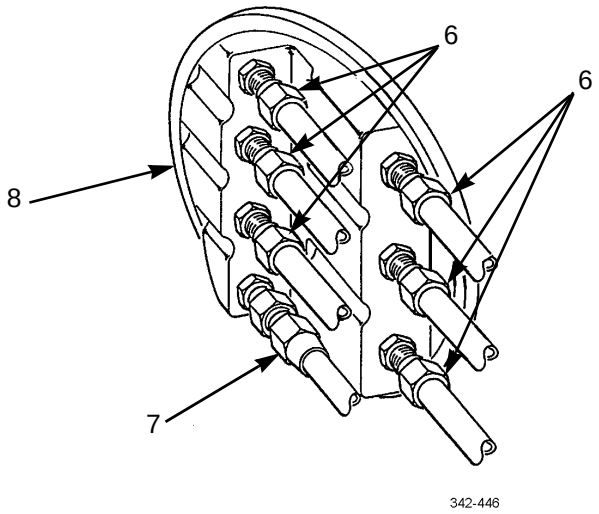

4. Disconnect eight tubes (9) and three plug connectors (10).
5. Remove two locknuts (11) and two wires (12).

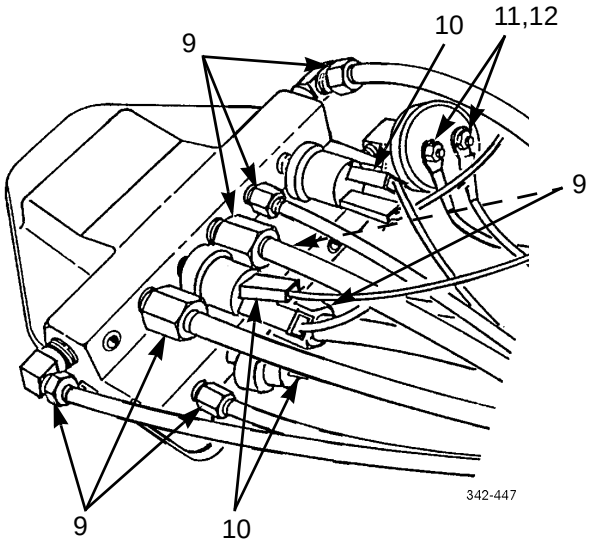

6. Remove three locknuts (16), screws (20), washers (19), ground wire (18), and cab air junction block (8). Discard locknuts.
7. Remove 13 connectors (13), four sending units (15), three elbows (17), and three pipe plugs (14) from cab air junction block (8).

CAB AIR JUNCTION BLOCK REPLACEMENT - CONTINUED 0191 00

REMOVAL - CONTINUED

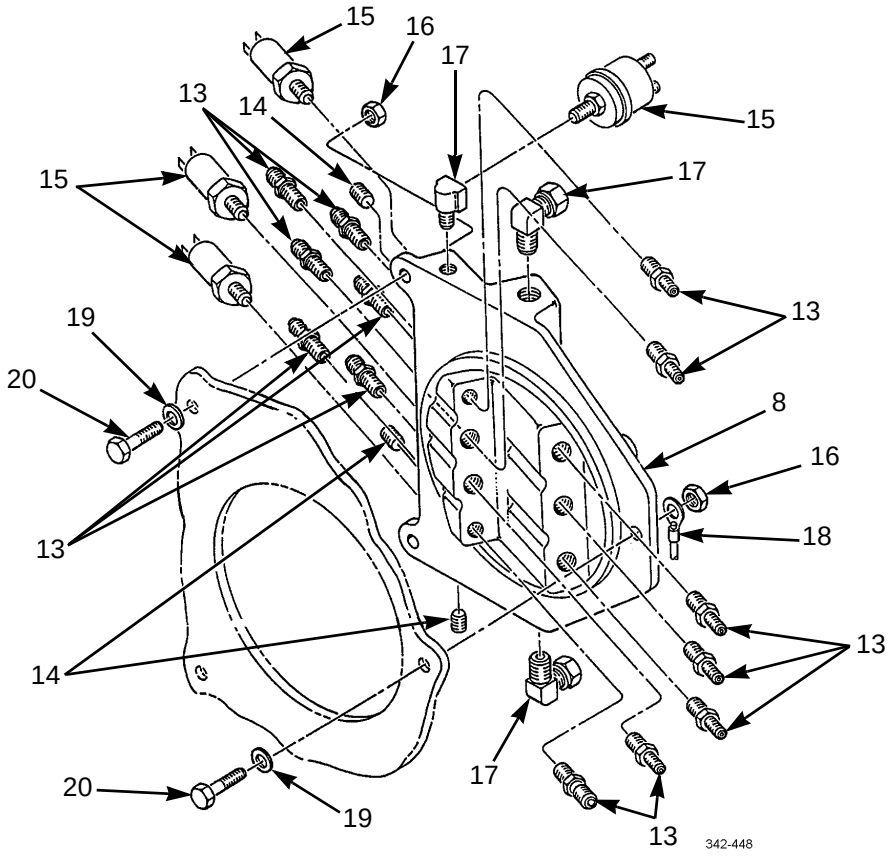

INSTALLATION

- Adhesives and sealing compounds can burn easily, can give off harmful vapors, and are harmful to skin and clothing. To avoid injury or death, keep away from open fire and use in a well-ventilated area. If adhesives or sealing compound contacts skin or clothing, wash immediately with soap and water.
- Ensure all air lines and fittings are clear of debris and excess pipe sealing compound does not enter air lines or fittings. Failure to follow this warning could result in injury to personnel or damage to equipment.

1. Coat threads with pipe sealing compound and install 13 connectors (13), four sending units (15), three elbows (17), and three pipe plugs (14) in cab air junction block (8).
2. Apply caulking compound to mating surface of cab air junction block (8).
3. Install cab air junction block (8), ground wire (18), three washers (19), screws (20), and new locknuts (16).
4. Install two wires (12) with new locknuts (11).
5. Connect three plug connectors (10) and eight tubes (9).
6. Connect six tubes (6) and oil line (7) to cab air junction block (8).

INSTALLATION - CONTINUED

7. Start vehicle and build air pressure (TM 9-2320-302-10). Check for leaks.
8. Install cover (5) and two screws (4).
9. Install cover (3) with five washers (2) and screws (1).

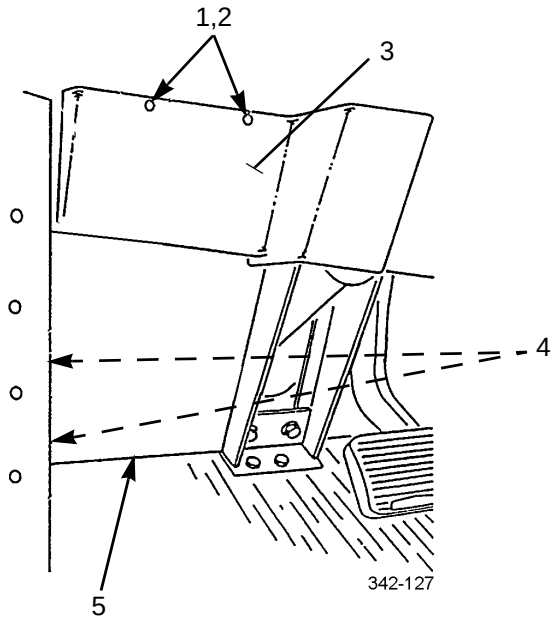

END OF WORK PACKAGE

TRACTOR PROTECTION VALVES REPLACEMENT (M915A3, M916A3) 0192 00

THIS WORK PACKAGE COVERS

Front Tractor Protection Valve Removal, Rear Tractor Protection Valve Removal, Front Tractor Protection Valve Installation, Rear Tractor Protection Valve Installation

INITIAL SETUP

Tools and Special Tools

Tool kit, general mechanic's (Item 50, WP 0306 00)

Materials/Parts

Compound, sealing, pipe (Item 13, WP 0305 00)

Nut, lock (P/N M45913/1-5CG5C) (4)

Materials/Parts - Continued

Strap, tiedown (Item 33, WP 0305 00

Tags, marker (Item 34, WP 0305 00)

Equipment Condition

Air system drained (TM 9-2320-302-10)

FRONT TRACTOR PROTECTION VALVE REMOVAL

NOTE

Tag tubes to aid in installation.

1. Remove tiedown strap (1).
2. Disconnect seven air lines (12) from tractor protection valve (3).
3. Remove two air hoses (4) from tractor protection valve (3).
4. Remove three elbows (11).

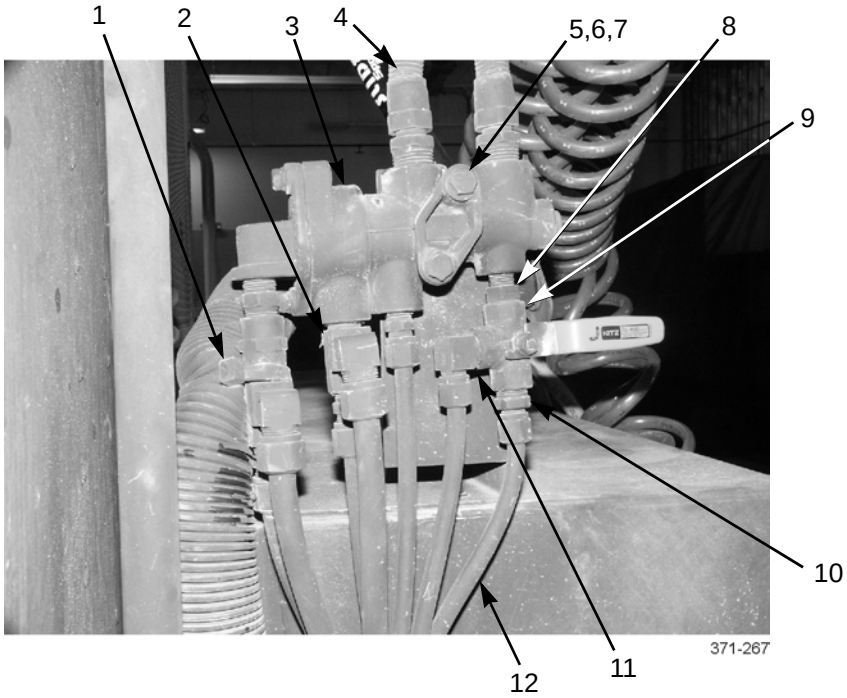

FRONT TRACTOR PROTECTION VALVE REMOVAL - CONTINUED

5. Remove four adapters (10).
6. Remove two tees (2).
7. Remove valve (9).
8. Remove two adapters (8).
9. Remove two locknuts (5), four washers (6), two bolts (7), and trailer protection valve (3). Discard locknuts.

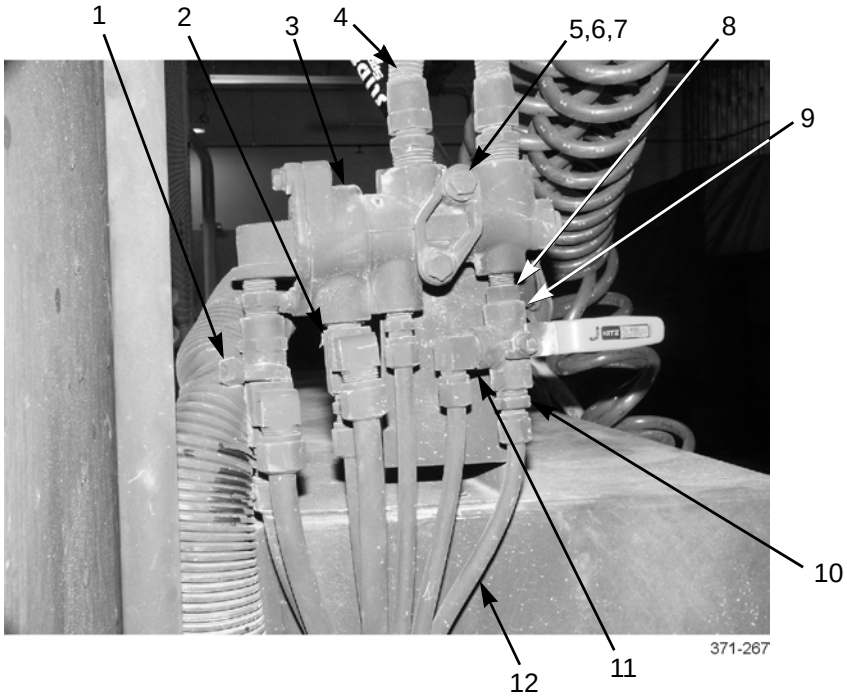

FRONT TRACTOR PROTECTION VALVE INSTALLATION


WARNING

- Adhesives and sealing compounds can burn easily, can give off harmful vapors, and are harmful to skin and clothing. To avoid injury or death, keep away from open fire and use in a well-ventilated area. If adhesives or sealing compound contacts skin or clothing, wash immediately with soap and water.
- Ensure all air lines and fittings are clear of debris and excess pipe sealing compound does not enter air lines or fittings. Failure to follow this warning could result in injury to personnel or damage to equipment.

1. Install tractor protection valve (3) with two bolts (7), four washers (6), and two new locknuts (5).
2. Coat threads of six adapters (8), valve (9), two tees (2), and three elbows (11) with pipe sealing compound.
3. Install two adapters (8).
4. Install valve (9).

FRONT TRACTOR PROTECTION VALVE INSTALLATION - CONTINUED

5. Install two tees (2).
6. Install four adapters (10).
7. Install three elbows (11).
8. Install two air hoses (4) on tractor protection valve (3).
9. Connect seven air lines (12) to tractor protection valve (3).
10. Install tiedown strap (1).

REAR TRACTOR PROTECTION VALVE REMOVAL

1. Disconnect five air lines (1).
2. Remove elbow (7).
3. Remove five adapters (5).
4. Remove two locknuts (2), four washers (3), two bolts (4), and trailer protection valve (6). Discard locknuts.

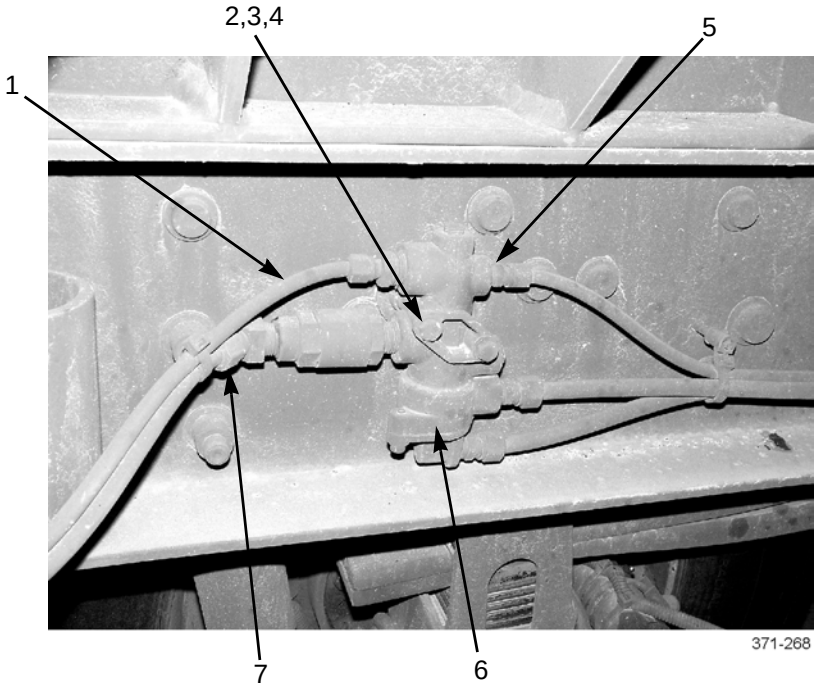

REAR TRACTOR PROTECTION VALVE INSTALLATION

WARNING

- Adhesives and sealing compounds can burn easily, can give off harmful vapors, and are harmful to skin and clothing. To avoid injury or death, keep away from open fire and use in a well-ventilated area. If adhesives or sealing compound contacts skin or clothing, wash immediately with soap and water.
- Ensure all air lines and fittings are clear of debris and excess pipe sealing compound does not enter air lines or fittings. Failure to follow this warning could result in injury to personnel or damage to equipment.

1. Install tractor protection valve (6) with two bolts (4), four washers (3), and two new locknuts (2).
2. Coat threads of one elbow (7) and five adapters (5) with pipe sealing compound.
3. Install five adapters (5).
4. Install one elbow (7).
5. Connect five air lines (1) to tractor protection valve (6).

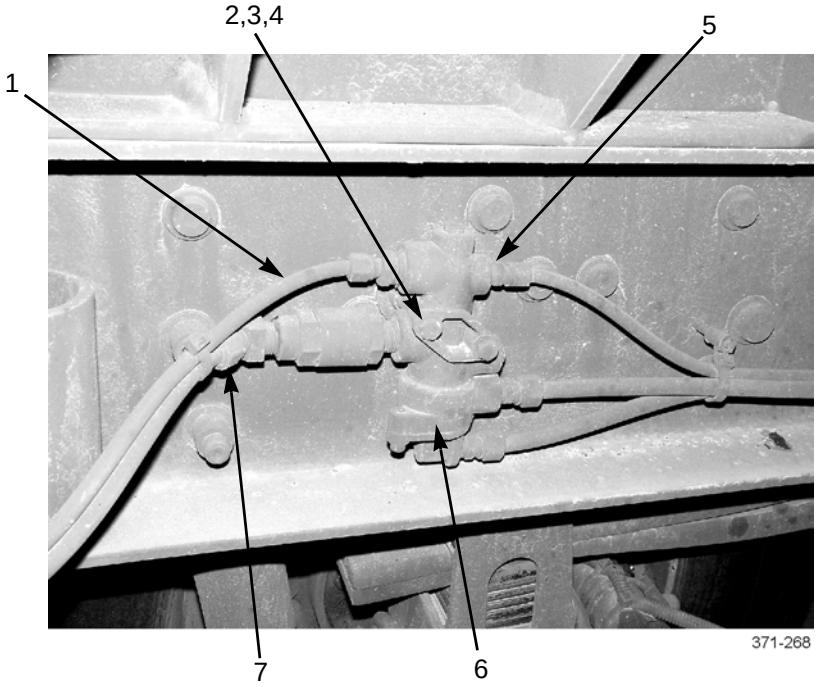

6. Start vehicle and check air system for leaks (TM 9-2320-302-10).

END OF WORK PACKAGE

FRONT GLADHAND REPLACEMENT 0193 00

THIS WORK PACKAGE COVERS

Removal, Installation

INITIAL SETUP

Tools and Special Tools

Tool kit, general mechanic's (Item 50, WP 0306 00)

Materials/Parts

Compound, sealing, pipe (Item 13, WP 0305 00)

Tags, marker (Item 34, WP 0305 00)

Materials/Parts - Continued

Nut, lock (P/N 23-10340-125) (2)

Washer, lock (P/N 45913/1-6CG5C) (2)

Equipment Condition

Air system drained (TM 9-2320-302-10)

NOTE

Tag tubes and fittings to aid in installation.

REMOVAL

1. Disconnect two tubes (2) from two elbows (1).
2. Remove two elbows (1), nuts (3), lockwashers (4), data plates (5), and gladhands (6) from mounting bracket (7). Discard lockwashers.

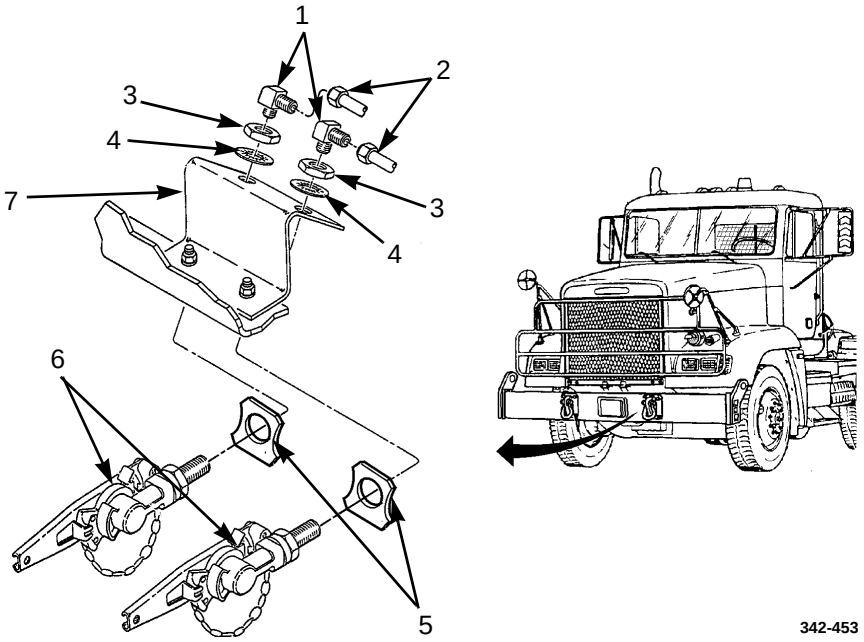

REMOVAL - CONTINUED

3. Remove two locknuts (8), washers (11), screws (10), and mounting bracket (7) from bumper (9). Discard locknuts.

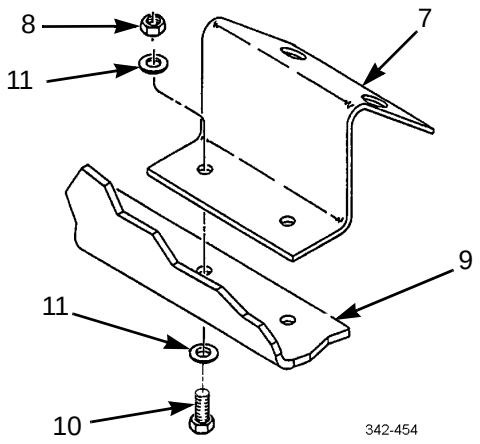

4. Remove bulkhead fitting (14), dummy coupling (12), two screws (15), two washers (16), chains (18), bracket (17), and seal (13) from each gladhand (6).

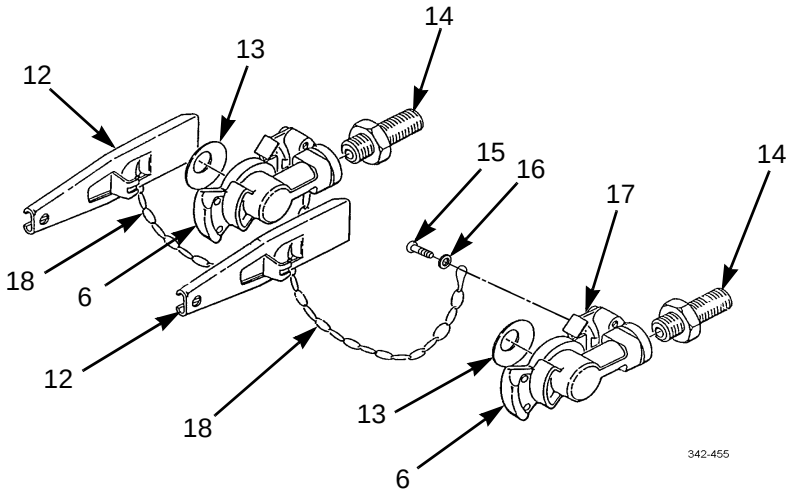

INSTALLATION

1. Install seal (13), bracket (17), chain (18), two washers (16), screws (15), and dummy coupling (12) on each gladhand (6).

INSTALLATION - CONTINUED


WARNING

- Adhesives and sealing compounds can burn easily, can give off harmful vapors, and are harmful to skin and clothing. To avoid injury or death, keep away from open fire and use in a well-ventilated area. If adhesives or sealing compound contacts skin or clothing, wash immediately with soap and water.
- Ensure all air lines and fittings are clear of debris and excess pipe sealing compound does not enter air lines or fittings. Failure to follow this warning could result in injury to personnel or damage to equipment.

2. Lightly coat threads of two bulkhead fittings (14) with pipe sealing compound. Install bulkhead fittings on gladhands (6).
3. Install mounting bracket (7) on bumper (9) with two washers (11), screws (10), and new locknuts (8).
4. Install data plates (5) on same gladhand (6) as during removal.
5. Install two gladhands (6) on mounting bracket (7) with two new lockwashers (4) and nuts (3).
6. Lightly coat threads of two elbows (1) with pipe sealing compound. Install elbows on two bulkhead fittings (14).
7. Connect two tubes (2) to elbows (1).
8. Start vehicle and build air pressure (TM 9-2320-302-10). Check for leaks.

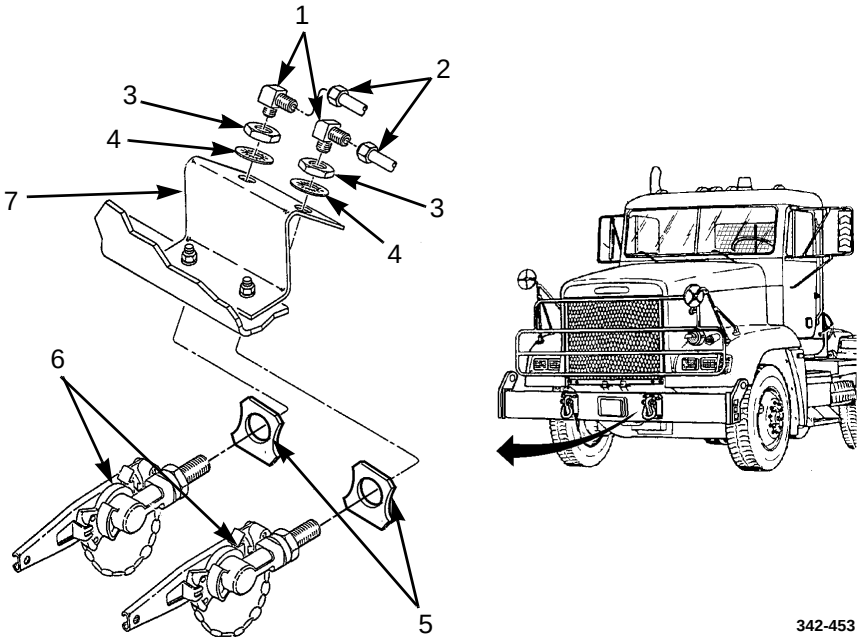

END OF WORK PACKAGE

REAR GLADHAND REPLACEMENT (M915A3 OLD MODEL) 0194 00

THIS WORK PACKAGE COVERS

Removal, Installation

INITIAL SETUP

Tools and Special Tools

Tool kit, general mechanic's (Item 50, WP 0306 00)

Materials/Parts

Compound, sealing, pipe (Item 13, WP 0305 00)

Washer, lock (P/N MS35333-49)

Equipment Condition

Air system drained (TM 9-2320-302-10)

NOTE

Emergency gladhand and service gladhand are replaced the same way. Emergency gladhand is shown.

REMOVAL

1. Disconnect tube (1) from connector (2).

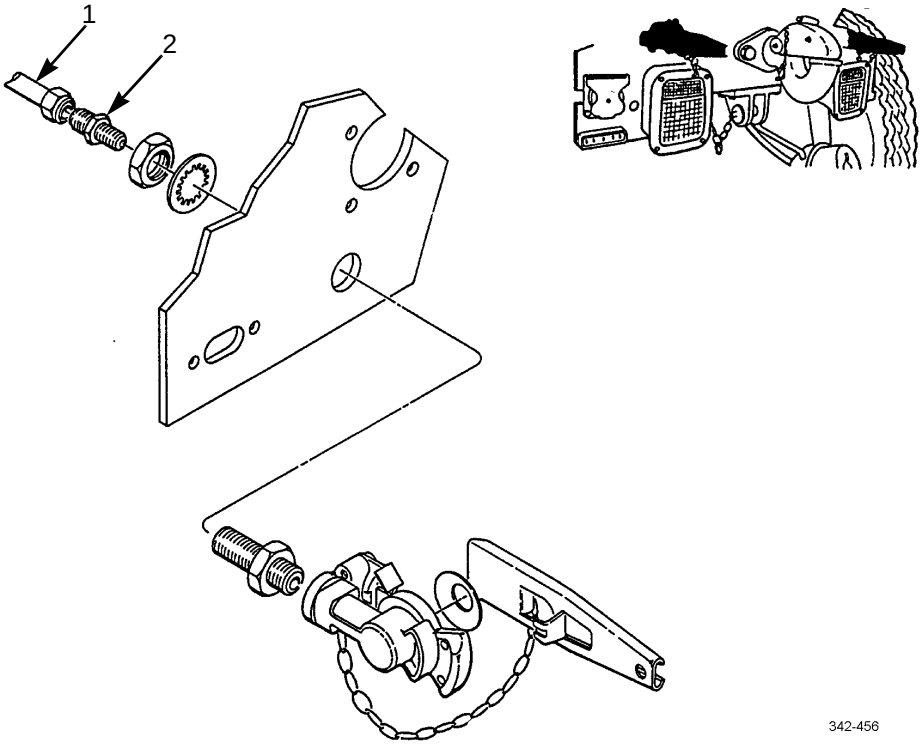

REMOVAL - CONTINUED

NOTE

It is not necessary to remove gladhand to replace gladhand seal.

2. Remove connector (2), nut (3), lockwasher (4), and gladhand (9) from bracket (5). Discard lockwasher.
3. Remove dummy coupling (7), chain (8), bulkhead fitting (10), and seal (6) from gladhand (9).

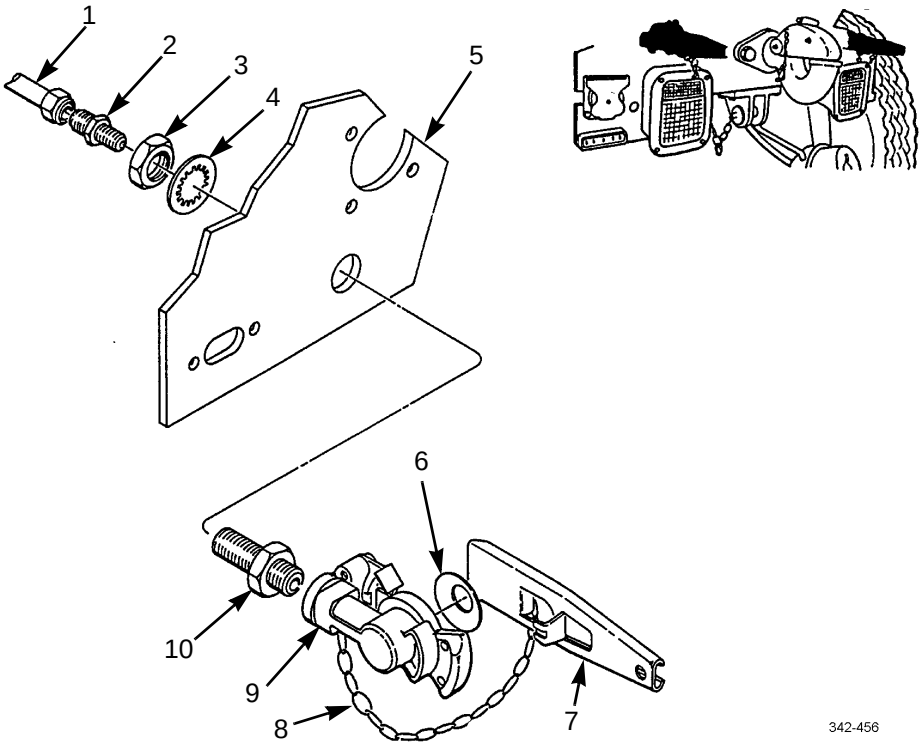

INSTALLATION

1. Install seal (6), chain (8), and dummy coupling (7) on gladhand (9).

WARNING

- Adhesives and sealing compounds can burn easily, can give off harmful vapors, and are harmful to skin and clothing. To avoid injury or death, keep away from open fire and use in a well-ventilated area. If adhesives or sealing compound contacts skin or clothing, wash immediately with soap and water.
- Ensure all air lines and fittings are clear of debris and excess pipe sealing compound does not enter air lines or fittings. Failure to follow this warning could result in injury to personnel or damage to equipment.

2. Lightly coat threads of bulkhead fitting (10) with pipe sealing compound. Install bulkhead fitting on gladhand (9).

INSTALLATION - CONTINUED

3. Install gladhand (9) on bracket (5) with new lockwasher (4) and nut (3).
4. Lightly coat threads of connector (2) with pipe sealing compound. Install connector on bulkhead fitting (10).
5. Connect tube (1) to connector (2).
6. Start vehicle and build air pressure (TM 9-2320-302-10). Check for leaks.

END OF WORK PACKAGE

REAR GLADHAND REPLACEMENT (M915A3 NEW MODEL, M916A3, M917A2) 0195 00

THIS WORK PACKAGE COVERS

Removal, Installation

INITIAL SETUP

Tools and Special Tools

Tool kit, general mechanic's (Item 50, WP 0306 00)

Materials/Parts

Compound, pipe sealing (Item 13, WP 0305 00)

Ring, packing (P/N BW 213630)

Equipment Condition

Air system drained (TM 9-2320-302-10)

REMOVAL

NOTE

To remove gladhand packing ring, perform step 1 only.

1. Remove dummy coupling (9) from gladhand (11). If damaged, remove packing ring (10) from gladhand and discard.
2. Remove two screws (8) and plate (7) from gladhand (11).
3. Remove dummy coupling (9) with chain attached from gladhand (11).
4. Disconnect air tube (1) from connector (2).
5. Remove connector (2) from bulkhead fitting (12).
6. Remove nut (3), lockwasher (4), bulkhead fitting (12) with gladhand (11), and label (6) from taillight bracket (5). Retain lockwasher for reuse.
7. Remove bulkhead fitting (12) from gladhand (11).

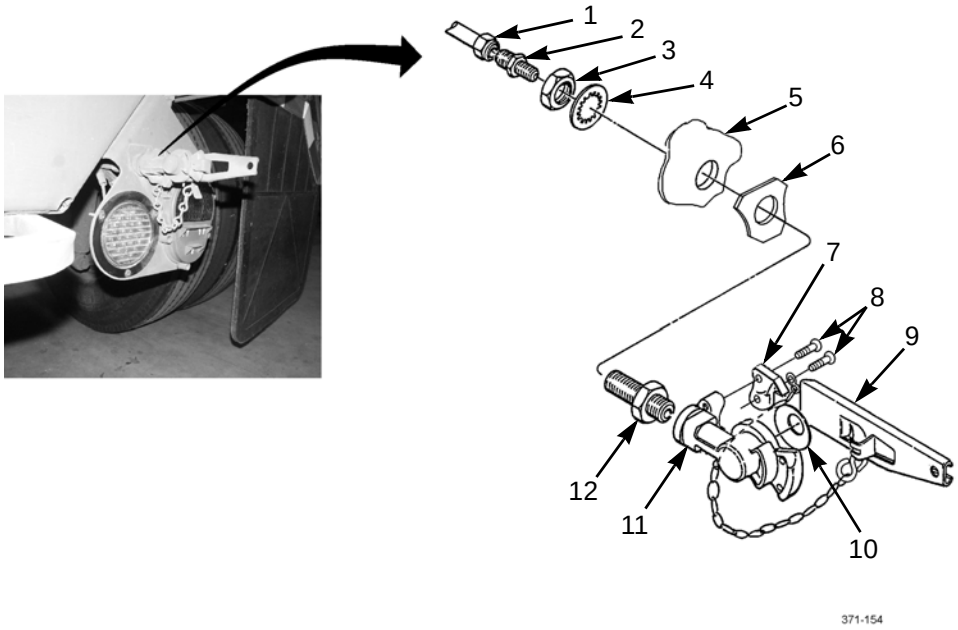

INSTALLATION


WARNING

- Adhesives and sealing compounds can burn easily, can give off harmful vapors, and are harmful to skin and clothing. To avoid injury or death, keep away from open fire and use in a well-ventilated area. If adhesives or sealing compound contacts skin or clothing, wash immediately with soap and water.
- Ensure all air lines and fittings are clear of debris and excess pipe sealing compound does not enter air lines or fittings. Failure to follow this warning could result in injury to personnel or damage to equipment.

NOTE

To install gladhand packing ring, perform steps 6 and 7 only.

1. Lightly coat threads of bulkhead fitting (12) with pipe sealing compound. Install bulkhead fitting to gladhand (11).
2. Install label (6) and bulkhead fitting (12) with gladhand (11) to taillight bracket (5) with lockwasher (4) and nut (3).
3. Install connector (2) to bulkhead fitting (10).
4. Connect air tube (1) to connector (2).
5. Install dummy coupling (9) to gladhand (11) with chain.
6. Install plate (7) with two screws (8) attaching chain end with either screw.
7. If removed, install new packing ring (10) to gladhand (11). Ensure packing ring is installed flat without twists or bulges.

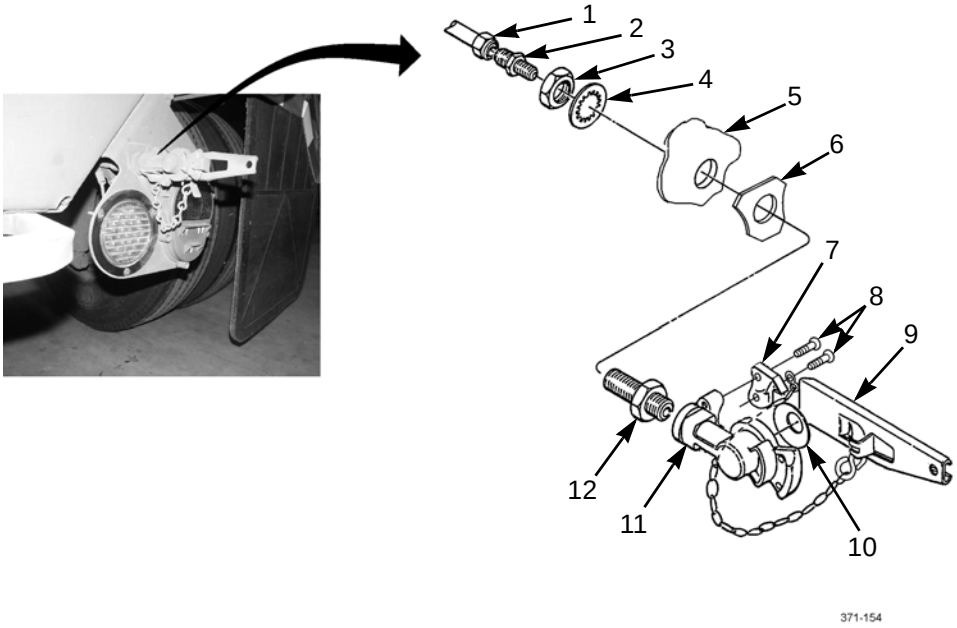

END OF WORK PACKAGE

FRONT QUICK-RELEASE VALVE REPLACEMENT 0196 00

THIS WORK PACKAGE COVERS

Removal, Installation

INITIAL SETUP

Tools and Special Tools

Tool kit, general mechanic's (Item 50, WP 0306 00)

Materials/Parts

Compound, sealing, pipe (Item 13, WP 0305 00)

Tags, marker (Item 34, WP 0305 00)

Nut, lock (P/N M45913/1-5C6B) (2)

Equipment Condition

Air system drained (TM 9-2320-302-10)

REMOVAL

NOTE

Tag tubes to aid in installation.

1. Disconnect three tubes (2) from quick-release valve (1).

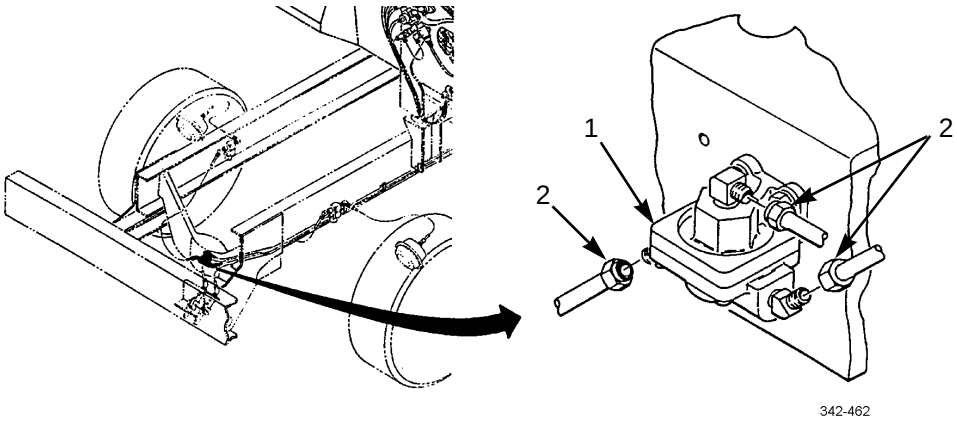

FRONT QUICK-RELEASE VALVE REPLACEMENT - CONTINUED 0196 00

REMOVAL - CONTINUED

2. Remove two locknuts (7), washers (6), screws (5), washers (4), and quick-release valve (1) from crossmember (3). Discard locknuts.
3. Remove three elbows (8) from quick-release valve (1).

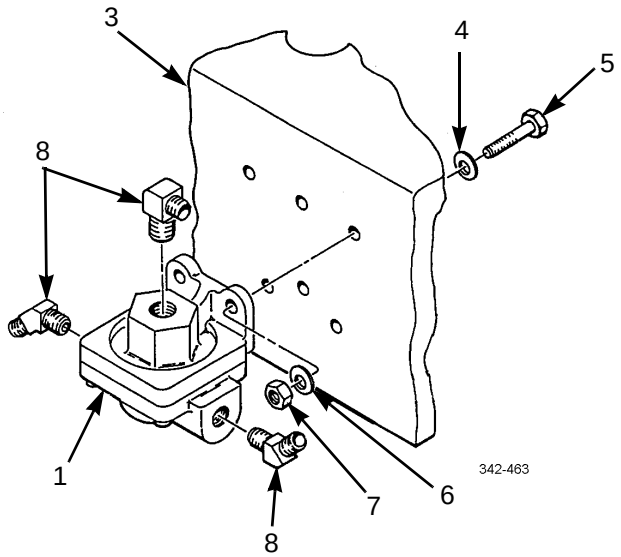

INSTALLATION

- Adhesives and sealing compounds can burn easily, can give off harmful vapors, and are harmful to skin and clothing. To avoid injury or death, keep away from open fire and use in a well-ventilated area. If adhesives or sealing compound contacts skin or clothing, wash immediately with soap and water.
- Ensure all air lines and fittings are clear of debris and excess pipe sealing compound does not enter air lines or fittings. Failure to follow this warning could result in injury to personnel or damage to equipment.

1. Lightly coat threads of three elbows (8) with pipe sealing compound. Install elbows in quick-release valve (1).
2. Install quick-release valve (1) on crossmember (3) with two washers (4), screws (5), washers (6), and new locknuts (7).
3. Connect three tubes (2) to quick-release valve (1).
4. Start vehicle and build air pressure (TM 9-2320-302-10). Check for leaks.

INSTALLATION - CONTINUED

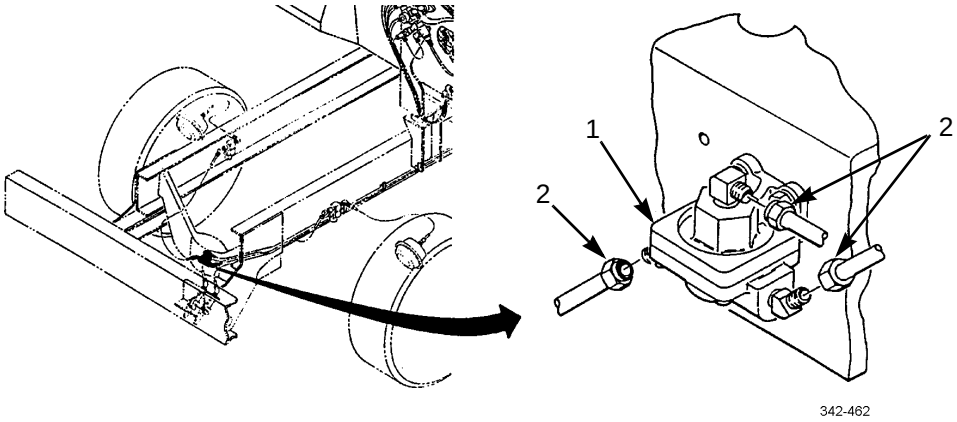

END OF WORK PACKAGE

REAR QUICK-RELEASE VALVE REPLACEMENT 0197 00

THIS WORK PACKAGE COVERS

Removal, Installation

INITIAL SETUP

Tools and Special Tools

Tool kit, general mechanic's (Item 50, WP 0306 00)

Materials/Parts

Compound, sealing, pipe (Item 13, WP 0305 00)

Tags, marker (Item 34, WP 0305 00)

Nut, lock (P/N M45913/1-5CBB) (2)

Equipment Condition

Air system drained (TM 9-2320-302-10)

REMOVAL

NOTE

Tag hoses and tubes to aid in installation.

1. Disconnect four hoses (6) and two tubes (5) from quick-release valve (12).
2. Remove two locknuts (10), washers (11), screws (1), washers (2), and quick-release valve (12). Discard locknuts.
3. Remove two elbows (7), tees (9), connectors (3), two-way check valve (4), and pipe nipple (8) from quick-release valve (12).

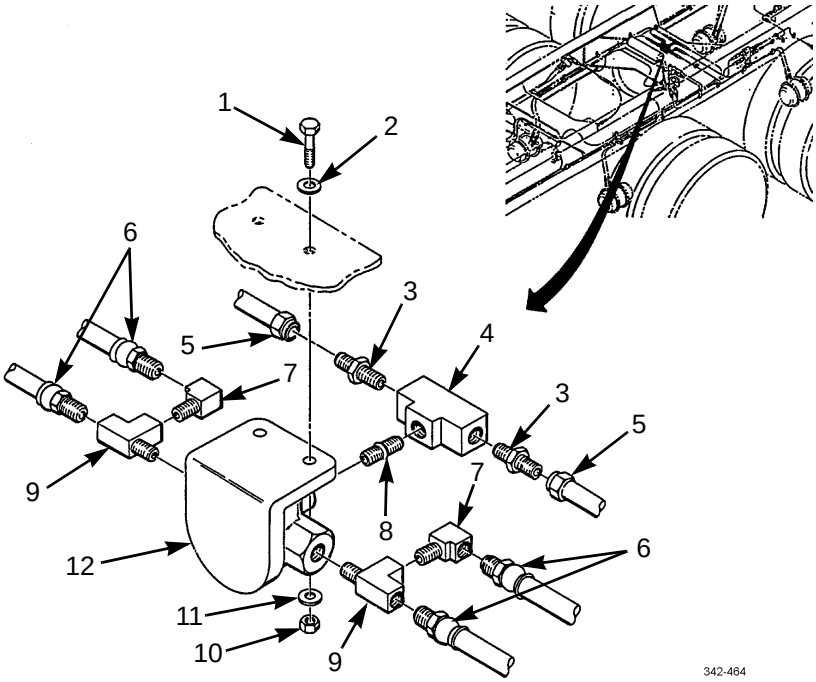

INSTALLATION

WARNINGS

- Adhesives and sealing compounds can burn easily, can give off harmful vapors, and are harmful to skin and clothing. To avoid injury or death, keep away from open fire and use in a well-ventilated area. If adhesives or sealing compound contacts skin or clothing, wash immediately with soap and water.
- Ensure all air lines and fittings are clear of debris and excess pipe sealing compound does not enter air lines or fittings. Failure to follow this warning could result in injury to personnel or damage to equipment.

1. Coat threads with pipe sealing compound and install pipe nipple (8), two-way check valve (4), two connectors (3), tees (9), and elbows (7) in quick-release valve (12).
2. Install quick-release valve (12) with two washers (2), screws (1), washers (11), and new locknuts (10).
3. Connect four hoses (6) and two tubes (5) to quick-release valve (12).
4. Start vehicle and build air pressure (TM 9-2320-302-10). Check for leaks.

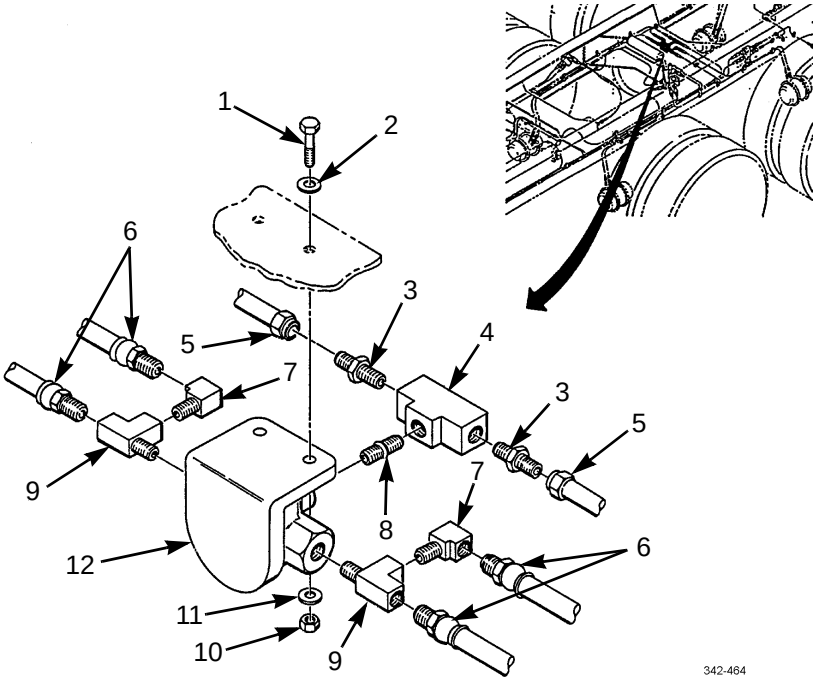

END OF WORK PACKAGE

AIR DRYER REPLACEMENT (M915A3) 0198 00

THIS WORK PACKAGE COVERS

Removal, Installation

INITIAL SETUP

Tools and Special Tools

Tool kit, general mechanic's (Item 50, WP 0306 00)

Wrench, torque, 15-75 lb-ft (Item 57, WP 0306 00)

Materials/Parts

Compound, sealing, pipe (Item 13, WP 0305 00)

Straps, tiedown (Item 33, WP 0305 00)

Tags, marker (Item 34, WP 0305 00)

Equipment Condition

Master battery switch in OFF position (TM 9-2320-302-10)

Wheels blocked

Air system drained (TM 9-2320-302-10)

Rear platform removed (WP 0261 00)

REMOVAL

NOTE

- Remove and discard tiedown straps as necessary. Use new tiedown straps on installation.
- Tag hoses and tubes to aid in installation.

REMOVAL - CONTINUED

1. Underneath front of air dryer (4), disconnect connector (7) of chassis wiring harness (8) from air dryer.
2. Disconnect air tube (1) from elbow (2).
3. Remove elbow (2) and adapter (3) from air dryer (4).
4. At side of air dryer (4), disconnect two air hoses (5) from two elbows (6).
5. Remove two elbows (6) from air dryer (4).

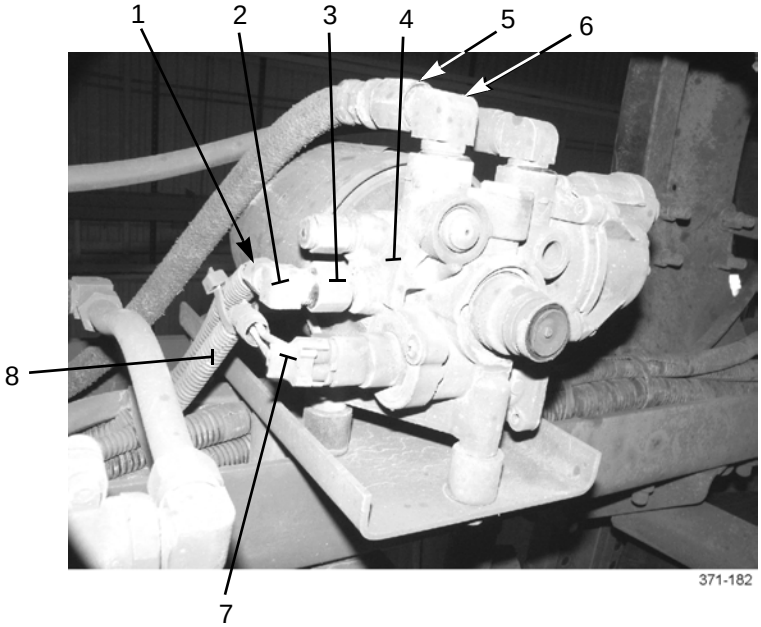

6. Remove three screws (11), washers (12), spacers (9), and air dryer (4) from air dryer bracket (10).

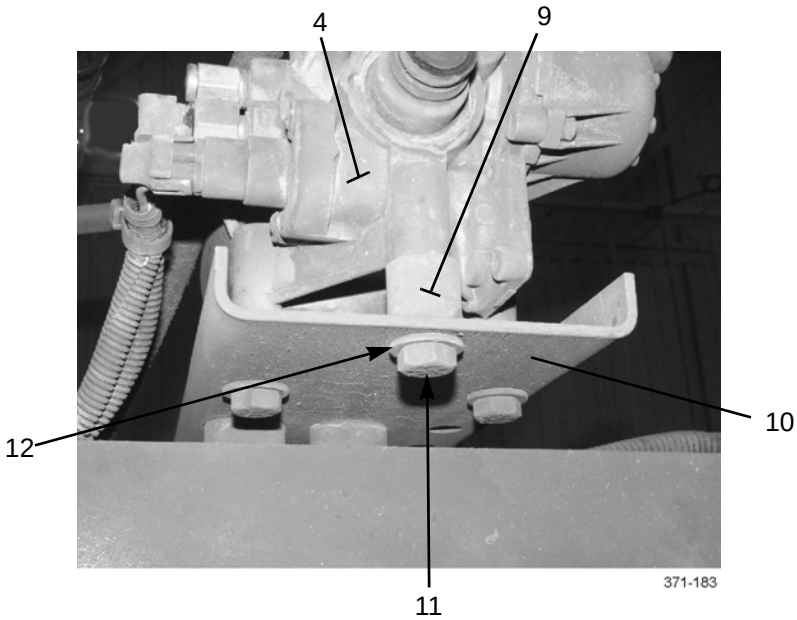

INSTALLATION

1. Install air dryer (4) to air dryer bracket (10) with three spacers (9), washers (12), and screws (11). Tighten screws to 22-30 lb-ft (30-40 Nm).

WARNING

- Adhesives and sealing compounds can burn easily, can give off harmful vapors, and are harmful to skin and clothing. To avoid injury or death, keep away from open fire and use in a well-ventilated area. If adhesives or sealing compound contacts skin or clothing, wash immediately with soap and water.
- Ensure all air lines and fittings are clear of debris and excess pipe sealing compound does not enter air lines or fittings. Failure to follow this warning could result in injury to personnel or damage to equipment.

2. Lightly coat threads of fittings with pipe sealing compound before they are installed.
3. At side of air dryer (4), install two elbows (6).
4. Connect two air hoses (5) to two elbows (6).
5. At front of air dryer (4), install adapter (3) and elbow (2).
6. Connect air tube (1) to elbow (2).
7. Connect connector (7) of chassis wiring harness (8) to air dryer (4).
8. Install rear platform (WP 0261 00).

END OF WORK PACKAGE

AIR DRYER REPLACEMENT (M916A3, M917A2) 0199 00

THIS WORK PACKAGE COVERS

Removal, Installation

INITIAL SETUP

Tools and Special Tools

Tool kit, general mechanic's (Item 50, WP 0306 00)

Materials/Parts

Compound, sealing, pipe (Item 13, WP 0305 00)

Tags, marker (Item 34, WP 0305 00)

Equipment Condition

Air system drained (TM 9-2320-302-10)

Master battery switch in OFF position (TM 9-2320-302-10)

Chassis guard screen removed (M916A3) (WP 0262 00)

Dump body raised (M917A2) (TM 5-3805-264-14&P)

WARNING

Make sure all air lines and fittings are clear of debris. Make sure excess pipe sealant compound does not enter air lines or fittings. Failure to do so could result in equipment failure and/or injury to personnel.

REMOVAL

1. Disconnect connector (1) and connector (3) of air dryer heater harness (2) from air dryer (4).

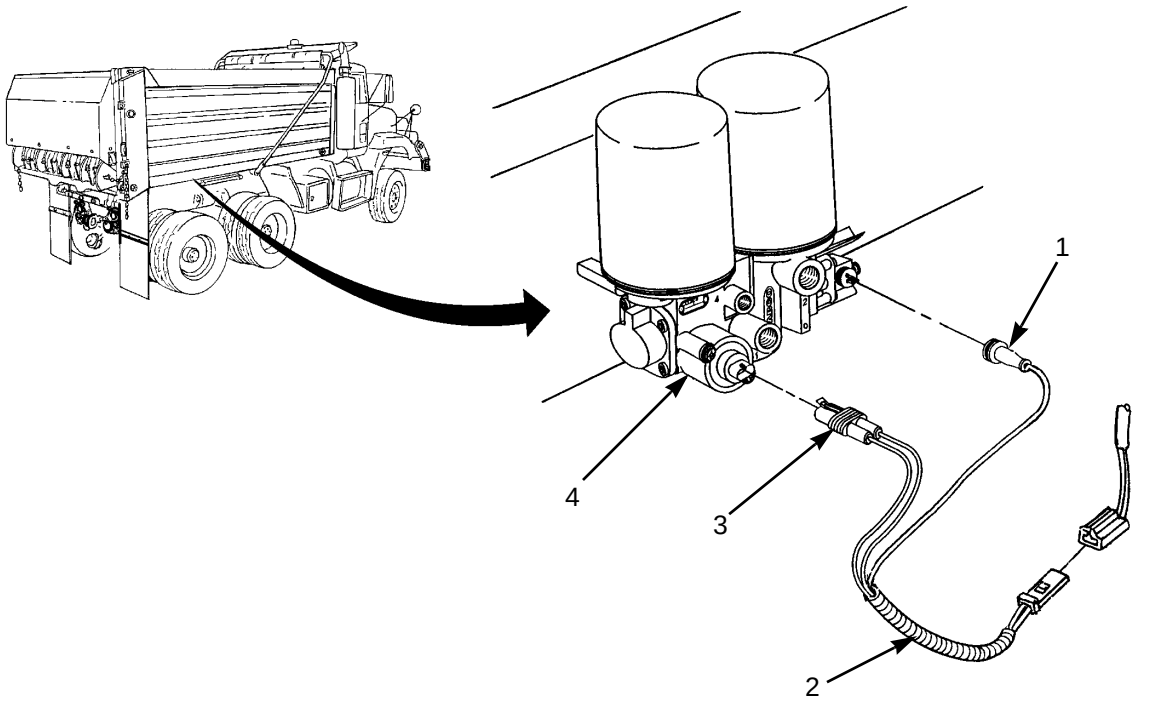

371-257

REMOVAL - CONTINUED

NOTE

Tag lines prior to removal to aid in installation.

2. Disconnect tube (11) from elbow (10).
3. Disconnect hose (13) from elbow (12).
4. Disconnect hose (9) from elbow (8).

NOTE

Note position of elbows for installation.

5. Remove elbows (8, 10, and 12).
6. Remove three screws (5), flat washers (6) and air dryer (4) from frame (7).

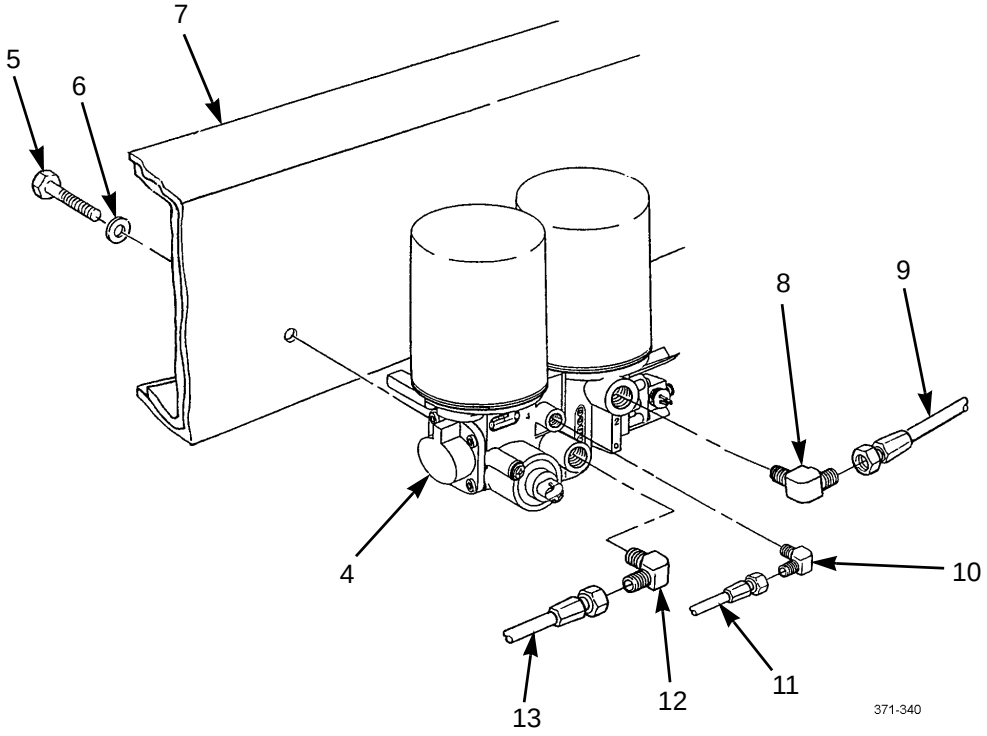

INSTALLATION

1. Install air dryer (4) to frame (7) with three flat washers (6) and screws (5).

WARNING

- Adhesives and sealing compounds can burn easily, can give off harmful vapors, and are harmful to skin and clothing. To avoid injury or death, keep away from open fire and use in a well-ventilated area. If adhesives or sealing compound contacts skin or clothing, wash immediately with soap and water.
- Ensure all air lines and fittings are clear of debris and excess pipe sealing compound does not enter air lines or fittings. Failure to follow this warning could result in injury to personnel or damage to equipment.

2. Coat threads with pipe sealing compound and install three elbows (8, 10, and 12) to air dryer (4).
3. Connect hose (9) to elbow (8).
4. Connect hose (13) to elbow (12).
5. Connect tube (11) to elbow (10).
6. Connect connector (1) and connector (3) of air dryer heater harness (2) to air dryer (4).

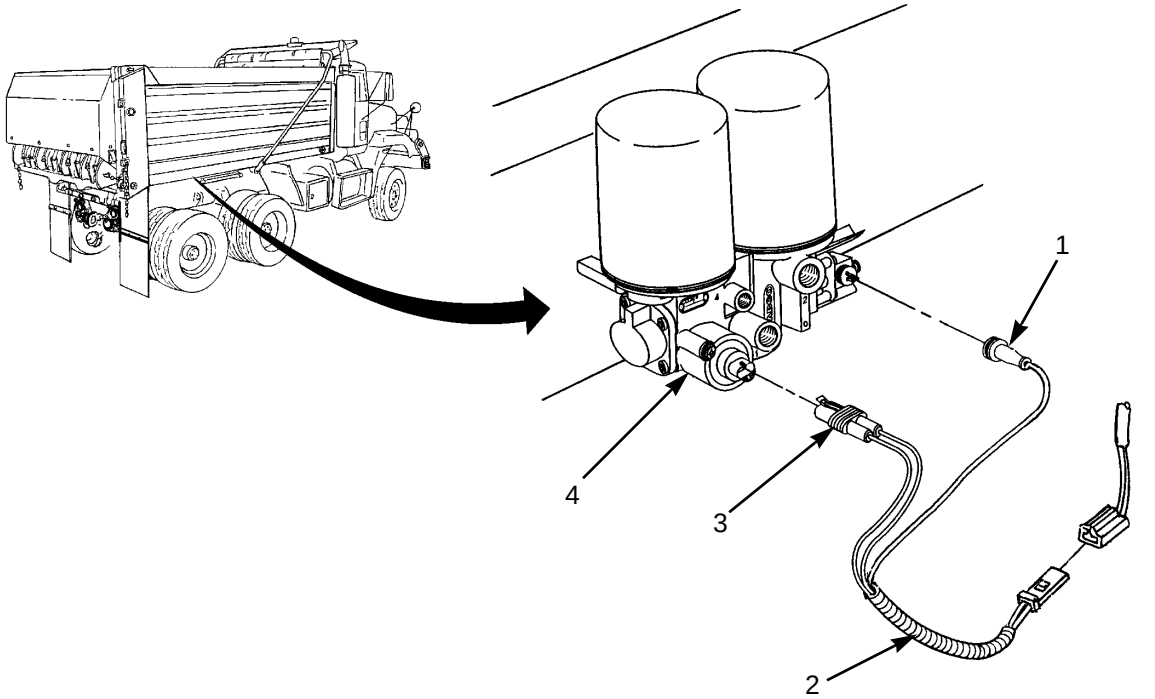

7. Install chassis guard screen (M916A3) (WP 0262 00).
8. Lower dump body (M917A2) (TM 5-3805-264-14&P).

END OF WORK PACKAGE

AIR DRYER CANISTER REPLACEMENT 0200 00

THIS WORK PACKAGE COVERS

Removal, Installation

INITIAL SETUP

Tools and Special Tools

Tool kit, general mechanic's (Item 50, WP 0306 00)

Wrench, strap (Item 54, WP 0306 00)

Materials/Parts

Oil, lubricating (Item 22, WP 0305 00)

Canister, air dryer (P/N R 950011)

Equipment Condition

Wheels blocked

Air system drained (TM 9-2320-302-10)

Rear platform removed (M915A3) (WP 0261 00)

Chassis guard screen removed (M916A3) (WP 0262 00)

Dump body raised (M917A2) (TM 5-3805-264-14&P)

REMOVAL

NOTE

M915A3 uses one air dryer canister. M916A3 and M917A2 use two. M915A3 is shown.

1. Use strap wrench to remove air dryer canister (1) from air dryer (3). Discard canister.
2. Remove o-ring (2) from air dryer (3). Discard o-ring.

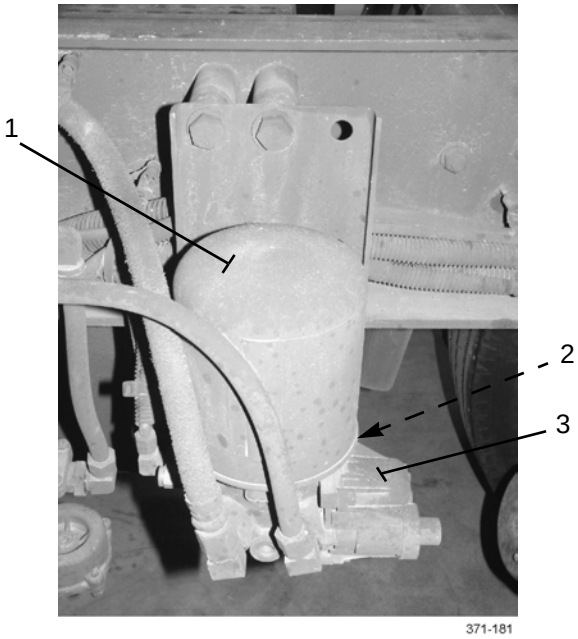

INSTALLATION

NOTE

New air dryer canister comes with a new o-ring.

1. Apply a thin coat of oil to new o-ring (2) and install o-ring to top of air dryer (3).
2. Apply a thin coat of oil to rubber seal of new air dryer canister (1).

NOTE

Perform step 3 for M915A3 vehicles.

3. Install air dryer canister (1) to air dryer (3) until rubber seal contacts surface of air dryer. Rotate canister an additional ONE full turn.

NOTE

Perform step 4 for M916A3 and M917A2 vehicles.

4. Install each air dryer canister (1) to air dryer until rubber seal contacts surface of air dryer. Rotate each canister an additional ONE-HALF turn.

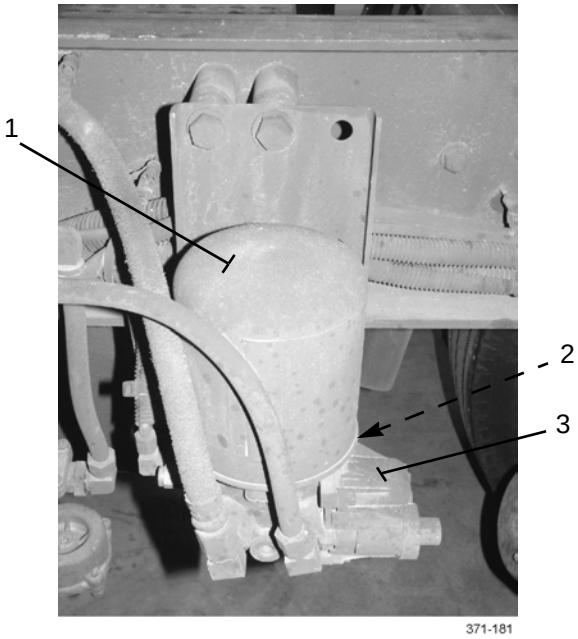

5. Lower dump body (M917A2) (TM 5-3805-264-14&P).
6. Install chassis guard screen (M916A3) (WP 0262 00).
7. Install rear platform (M915A3) (WP 0261 00).

END OF WORK PACKAGE

TRAILER HAND BRAKE REPLACEMENT 0201 00

THIS WORK PACKAGE COVERS

Removal, Installation

INITIAL SETUP

Tools and Special Tools

Tool kit, general mechanic's (Item 50, WP 0306 00)

Materials/Parts

Compound, sealing, pipe (Item 13, WP 0305 00)

Tags, marker (Item 34, WP 0305 00)

Equipment Condition

Air system drained (TM 9-2320-302-10)

REMOVAL

NOTE

Tag tubes to aid in installation.

1. Disconnect three air lines (9) from trailer hand brake (8).
2. Remove two adapters (10) from trailer hand brake (8).
3. Remove clamp (1) and trailer hand brake (8) from steering column.
4. Remove screw (5) and handle (6) from trailer hand brake (8).
5. Remove three screws (3), washers (4), and bracket (2) from trailer hand brake (8).
6. Loosen jamnut (7), and unscrew handle (6) from handle base.
7. Unscrew jamnut (7) from handle (6).

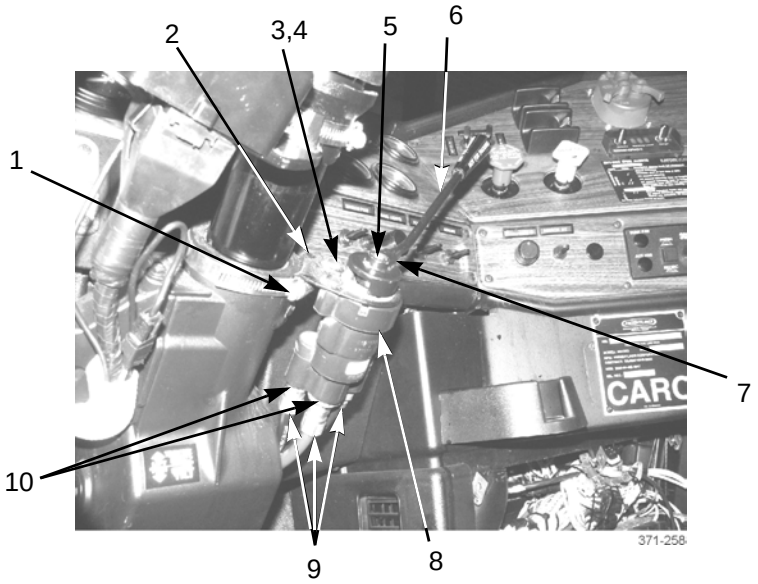

INSTALLATION

1. Screw jamnut (7) onto handle (6).
2. Screw handle (6) into handle base.
3. Tighten jamnut (7) against handle base.
4. Install bracket (2) with three screws (3) and washers (4).
5. Install handle (6) onto trailer hand brake (8) with screw (5).
6. Position trailer hand brake (8) on steering column and secure with clamp (1).

WARNING

Adhesives and sealing compounds can burn easily, can give off harmful vapors, and are harmful to skin and clothing. To avoid injury or death, keep away from open fire and use in a well-ventilated area. If adhesive or sealing compound contacts skin or clothing, wash immediately with soap and water.

7. Lightly coat threads of two adapters (10) and three air lines (9) with pipe sealing compound.
8. Install two adapters (10) to trailer hand brake (8).
9. Install three air lines (9) on trailer hand brake (8).

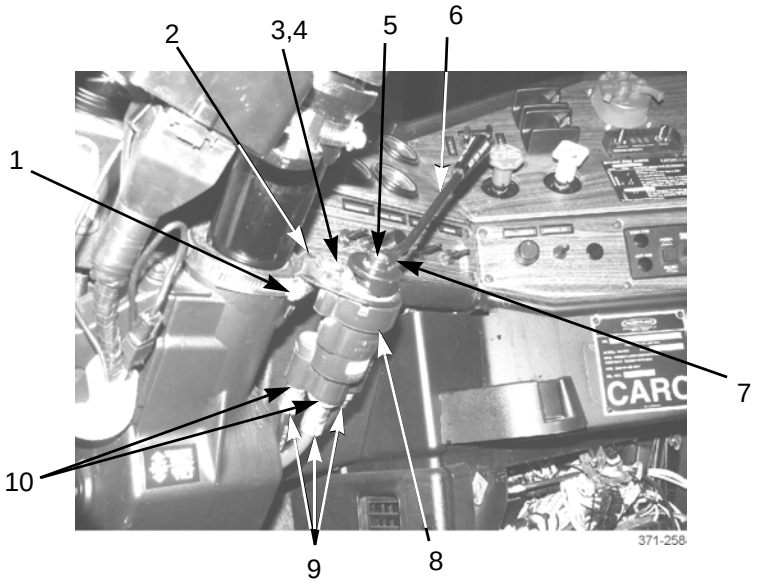

10. Start vehicle and check air system for leaks (TM 9-2320-302-10).

END OF WORK PACKAGE

PARKING BRAKE AND TRAILER AIR SUPPLY VALVE REPLACEMENT 0202 00

THIS WORK PACKAGE COVERS

Removal, Installation

INITIAL SETUP

Tools and Special Tools

Tool kit, general mechanic's (Item 50, WP 0306 00)

Wrench set, socket attachment (Item 61, WP 0306 00)

Materials/Parts

Compound, sealing, pipe (Item 13, WP 0305 00)

Tags, marker (Item 34, WP 0305 00)

References

WP 0299 00

Equipment Condition

Air system drained (TM 9-2320-302-10)

REMOVAL

1. Remove six torx screws (1), defroster vent (2) and dashboard cover (3).
2. Remove five torx screws (5) and move panel (4) aside.

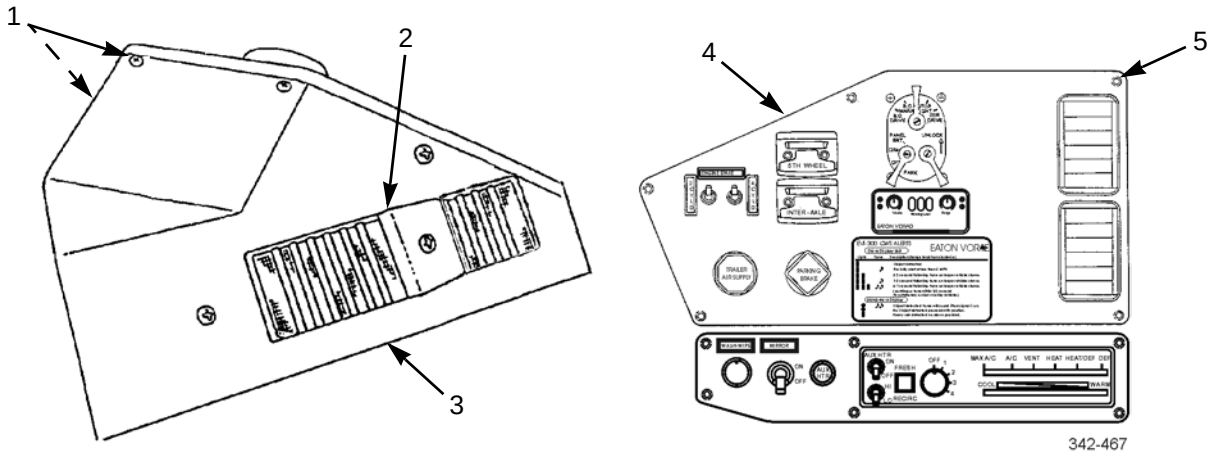

NOTE

Refer to *General Maintenance Instructions* (WP 0299 00) for information on removing and installing air tubes with push-in fittings.

REMOVAL - CONTINUED

NOTE

Tag tubes and connectors to aid in installation.

3. Disconnect six tubes (9) from valve (12).
4. Remove four screws (11), washers (10), and valve (12).
5. Remove five elbows (6), adapter (8), tee (7), and plug (13) from valve (12).

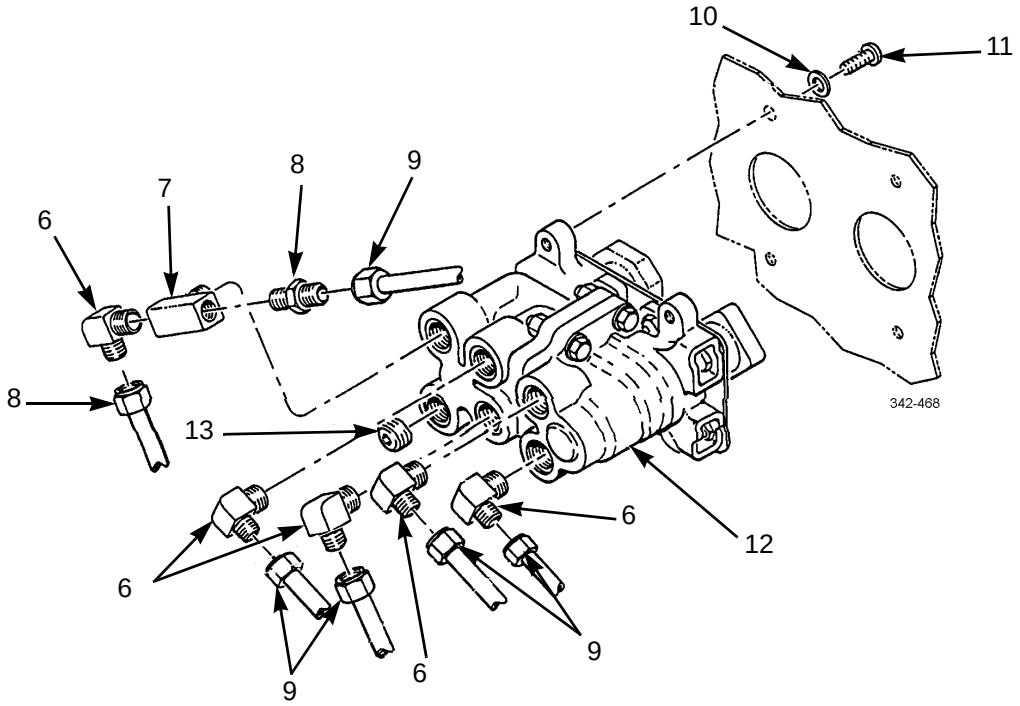

INSTALLATION


WARNINGS

- Adhesives and sealing compounds can burn easily, can give off harmful vapors, and are harmful to skin and clothing. To avoid injury or death, keep away from open fire and use in a well-ventilated area. If adhesives or sealing compound contacts skin or clothing, wash immediately with soap and water.
- Ensure all air lines and fittings are clear of debris and excess pipe sealing compound does not enter air lines or fittings. Failure to follow this warning could result in injury to personnel or damage and equipment.

1. Coat threads with pipe sealing compound and install plug (13), tee (7), adapter (8), and five elbows (6) in valve (12).
2. Install valve (12) with four washers (10) and screws (11).
3. Connect six tubes (9) to valve (12).

INSTALLATION - CONTINUED

4. Start vehicle and build air pressure (TM 9-2320-302-10). Check for leaks.
5. Install panel (4) with five torx screws (5).
6. Install dashboard cover (3), defroster vent (2), and six torx screws (1).

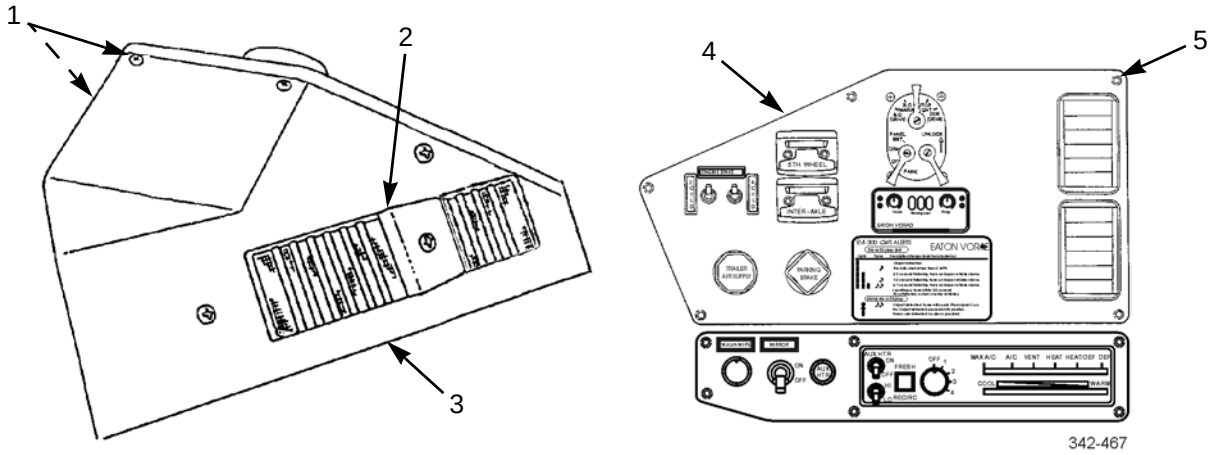

END OF WORK PACKAGE

FOOT BRAKE VALVE REPLACEMENT 0203 00

THIS WORK PACKAGE COVERS

Removal, Installation

INITIAL SETUP

Tools and Special Tools

Tool kit, general mechanic's (Item 50, WP 0306 00)

Materials/Parts

Compound, sealing, pipe (Item 13, WP 0305 00)

Grease, silicone (Item 19, WP 0305 00)

Tags, marker (Item 34, WP 0305 00)

Gasket (P/N 12-15695-000)

References

WP 0299 00

Equipment Condition

Air system drained (TM 9-2320-302-10)

Foot brake valve plunger rod disconnected from brake pedal (WP 0172 00)

NOTE

Refer to *General Maintenance Instructions* in WP 0299 00 for information on removing and installing air tubes with push-in fittings.

FOOT BRAKE VALVE REPLACEMENT - CONTINUED 0203 00

REMOVAL

NOTE

Tag tubes and connectors to aid in installation.

1. Disconnect 10 tubes (1) from elbows (2) and adapters (10). Remove tube (11).
2. Remove nine elbows (2), three adapters (10), two plugs (9), three check valves (8), three nipples (3), and elbow (12).
3. Remove two screws (7), washers (6), foot brake valve (13), and gasket (5) from firewall (4). Discard gasket.

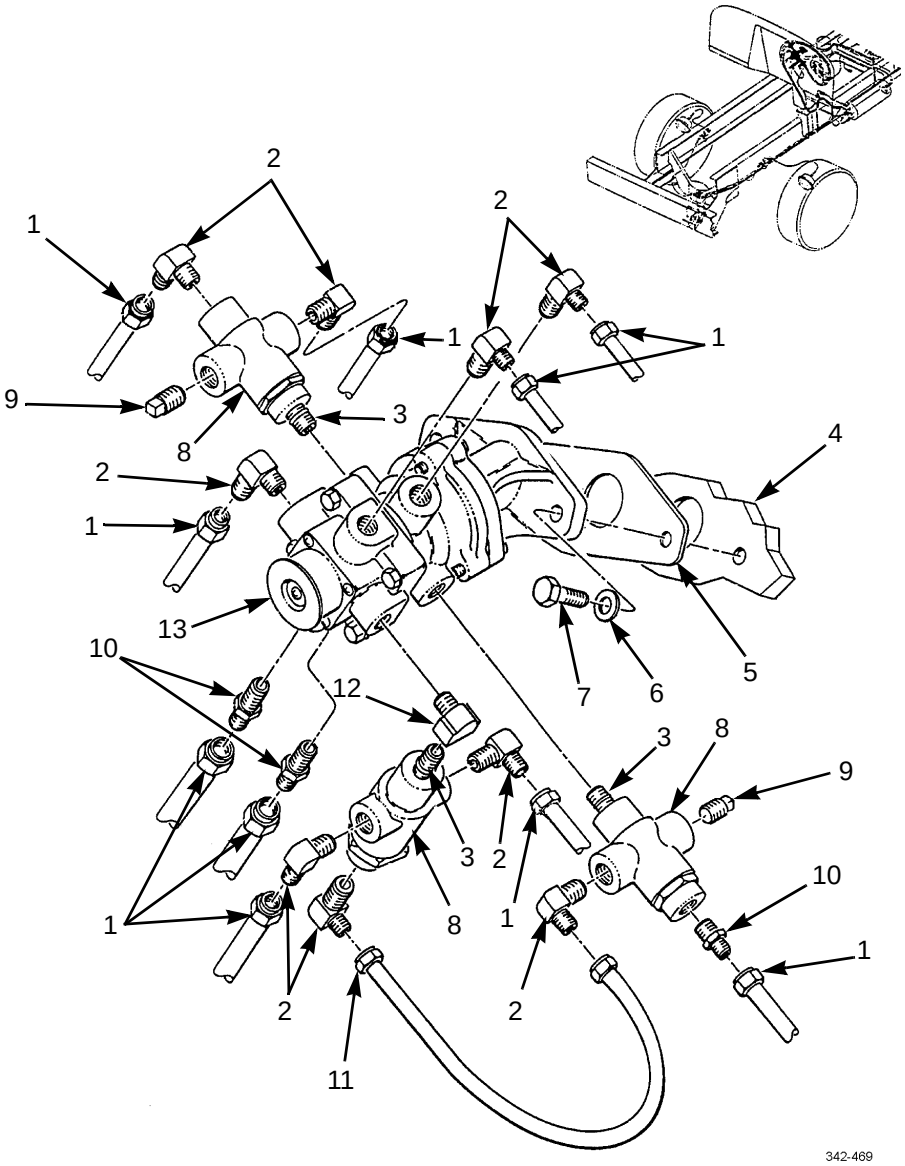

INSTALLATION

1. Lightly coat sliding surface of foot brake valve (13) plunger and adapter bore with silicone grease.
2. Install foot brake valve (13) and new gasket (5) on firewall (4) with two washers (6) and screws (7).

WARNING

- Adhesives and sealing compounds can burn easily, can give off harmful vapors, and are harmful to skin and clothing. To avoid injury or death, keep away from open fire and use in a well-ventilated area. If adhesives or sealing compound contacts skin or clothing, wash immediately with soap and water.
- Ensure all air lines and fittings are clear of debris and excess pipe sealing compound does not enter air lines or fittings. Failure to follow this warning could result in injury to personnel or damage to equipment.

3. Lightly coat threads with pipe sealing compound and install elbow (12), three nipples (3), three check valves (8), two plugs (9), three adapters (10), and nine elbows (2).
4. Install tube (11). Connect 10 tubes (1) to elbows (2) and adapters (10).
5. Connect foot brake valve plunger rod to brake pedal (WP 0172 00).
6. Start vehicle and build air pressure (TM 9-2320-302-10). Check for leaks.

END OF WORK PACKAGE

FRONT ANTI-LOCK BRAKE SYSTEM (ABS) SOLENOID VALVE REPLACEMENT 0204 00

THIS WORK PACKAGE COVERS

Removal, Installation

INITIAL SETUP

Tools and Special Tools

Tool kit, general mechanic's (Item 50, WP 0306 00)

Materials/Parts

Compound, sealing, pipe (Item 13, WP 0305 00)

Tags, marker (Item 34, WP 0305 00)

Nut, lock (P/N M45913/1-6CG5C) (2)

Nut, lock (P/N M45913/1-5CBB) (2)

Equipment Condition

Air system drained (TM 9-2320-302-10)

Master battery switch in OFF position (TM 9-2320-302-10)

REMOVAL

NOTE

Tag air lines to aid in installation.

1. Disconnect two electrical cables (2) from ABS valve (1).

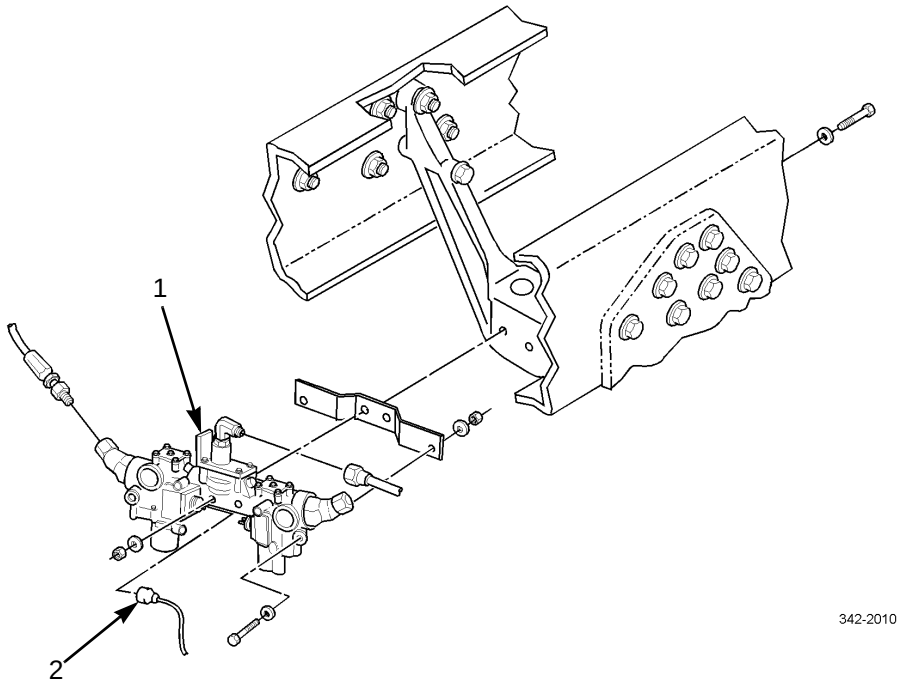

REMOVAL - CONTINUED

2. Disconnect three air lines (11) from ABS valve (1).
3. Remove two screws (9), four washers (7), two locknuts (6), and ABS valve (1) from bracket (8). Discard locknuts.

NOTE

Do not perform next step unless bracket is damaged.

4. Remove two bolts (3), four washers (4), two locknuts (10), and bracket (8) from frame (5). Discard locknuts.

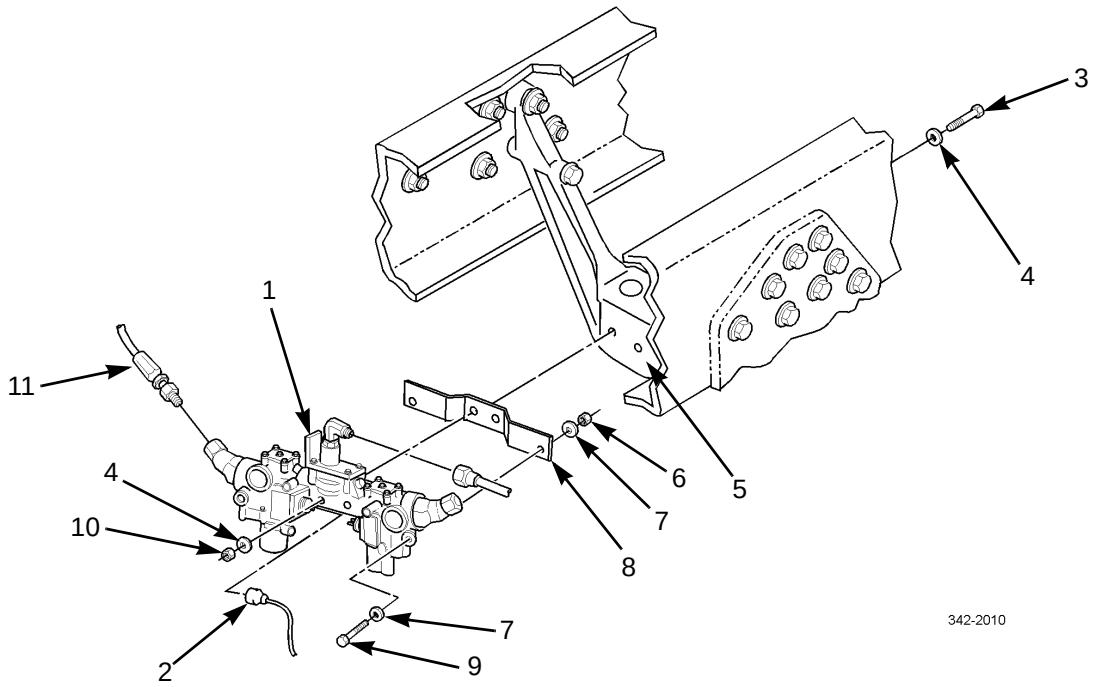

INSTALLATION

NOTE

Do not perform next step unless bracket was removed.

1. Position bracket (8) on frame (5) and install two bolts (3), four washers (4), and two new locknuts (10).
2. Position ABS valve (1) on bracket (8) and install two screws (9), four washers (7), and two new locknuts (6).
3. Connect three air lines (11) to ABS valve (1).
4. Connect two electrical cables (2) to ABS valve (1).
5. Start vehicle (TM 9-2320-302-10) to build air pressure and check for leaks.

END OF WORK PACKAGE

REAR ANTI-LOCK BRAKE SYSTEM (ABS) SOLENOID VALVE REPLACEMENT 0205 00

THIS WORK PACKAGE COVERS

Removal, Installation

INITIAL SETUP

Tools and Special Tools

Tool kit, general mechanic's (Item 50, WP 0306 00)

Materials/Parts

Compound, sealing, pipe (Item 13, WP 0305 00)

Nut, lock (P/N M45913/1-5CG5C) (4)

Equipment Condition

Air system drained (TM 9-2320-302-10)

Rear platform removed (M915A3) (WP 0261 00) or chassis guard screen removed (M916A3) (WP 0262 00)

Dump body raised (M917A2) (TM 5-3805-264-14&P)

NOTE

Forward-rear and rear-rear ABS solenoid valves are replaced the same way.

REMOVAL

1. Disconnect two electrical cables (11) from ABS valve (2).
2. Disconnect four air lines (1) from ABS valve (2).
3. Remove two screws (10), four washers (9), two locknuts (8), and ABS valve (2) from bracket (3). Discard locknuts.

NOTE

Do not perform next step unless bracket is damaged.

4. Remove two bolts (5), four washers (4), two locknuts (7), and bracket (3) from frame (6). Discard locknuts.

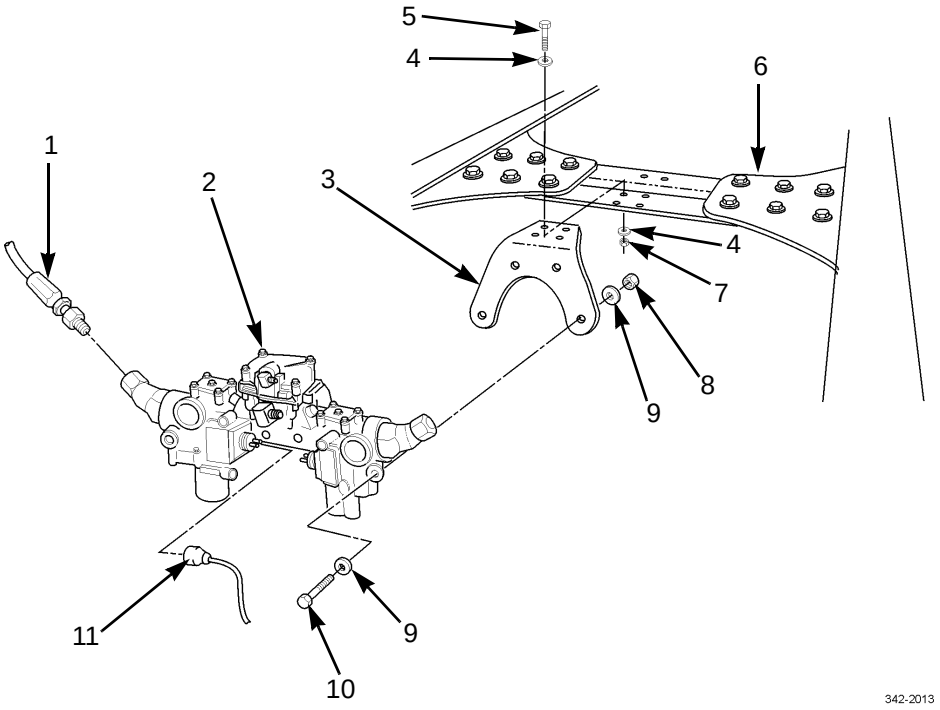

INSTALLATION

NOTE

Do not perform next step unless bracket was removed.

1. Position bracket (3) on frame (6) and install two bolts (5), four washers (4), and two new locknuts (7).
2. Position ABS valve (2) on bracket (3) and install two screws (10), four washers (9), and two nuts (8).
3. Connect four air lines (1) to ABS valve (2).
4. Connect two electrical cables (11) to ABS valve (2).
5. Start vehicle (TM 9-2320-302-10) to build air pressure and check for leaks.

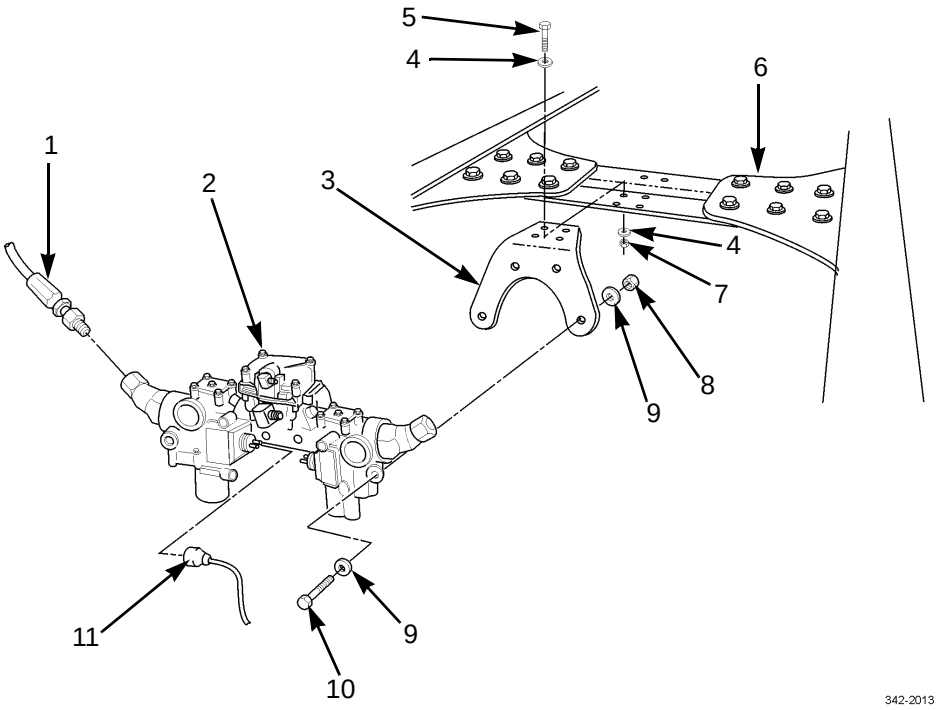

6. Install rear platform (M915A3) (WP 0261 00).
7. Install chassis guard screen (M916A3) (WP 0262 00).
8. Lower dump body (M917A2) (TM 5-3805-364-14&P).

END OF WORK PACKAGE

FRONT AND DUAL REAR WHEEL LUG NUT INSTALLATION 0206 00

THIS WORK PACKAGE COVERS

Front Wheel Lug Nuts Installation, Rear Wheel Lug Nuts Installation

INITIAL SETUP

Tools and Special Tools

Tool kit, general mechanic's (Item 50, WP 0306 00)

Wrench, torque, 100-600 lb-ft (Item 59, WP 0306 00)

Wrench set, socket, 3/4 in drive (Item 60, WP 0306 00)

FRONT WHEEL LUG NUTS INSTALLATION

WARNING

Whenever any lug nuts require tightening or a wheel has been removed and replaced, all lug nuts must be tightened to the required torque. Failure to follow this warning may result in serious injury to personnel or damage to equipment.

NOTE

- Tightening pattern is the same for all wheel assemblies.
- After operating vehicle for 50-100 miles (80 to 160 km), tighten lug nuts again.

1. Install lug nut on each wheel stud and hand tighten until each lug nut is flush with face of chamfer on wheel.
2. Rotate wheel half a turn to seat parts and hand tighten each wheel lug nut again.
3. Tighten each lug nut to 50 lb-ft (68 Nm) in accordance with tightening pattern.

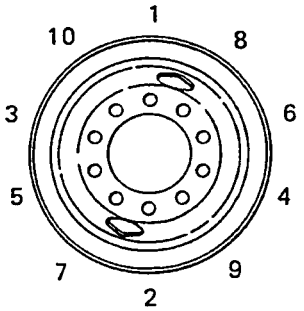

TIGHTENING PATTERN

342-489

FRONT WHEEL LUG NUTS INSTALLATION - CONTINUED

4. Using same tightening pattern, tighten each lug nut to 450-500 lb-ft (610-678 Nm).
5. Using same tightening pattern, again tighten each lug nut to 450-500 lb-ft (610-678 Nm).

REAR WHEEL LUG NUTS INSTALLATION

WARNING

Whenever any lug nuts require tightening or a wheel has been removed and replaced, all lug nuts must be tightened to required torque. Failure to follow this warning may result in serious injury to personnel or damage to equipment.

NOTE

- Tightening pattern is the same for all wheel assemblies.
- After operating vehicle for 50-100 miles (80 to 160 km), again tighten lug nuts.

1. Install a lug nut on each wheel stud and hand tighten until each nut is flush with face of chamfer on wheel.
2. Rotate wheel half a turn to seat parts and hand tighten each wheel lug nut again.
3. Tighten each wheel lug nut to 50 lb-ft (68 Nm) in accordance with tightening pattern.
4. Using same tightening pattern, tighten each wheel lug nut to 450-500 lb-ft (610-678 Nm).

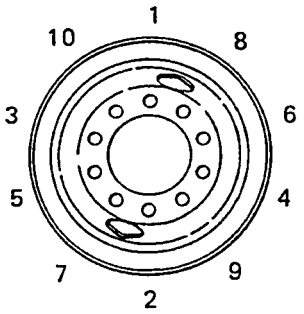

TIGHTENING PATTERN

342-489

5. Using same tightening pattern, again tighten each wheel lug nut to 450-500 lb-ft (610-678 Nm).

END OF WORK PACKAGE

FRONT HUB, DRUM, WHEEL BEARINGS, AND SEAL REPLACEMENT (M915A3) 0207 00

THIS WORK PACKAGE COVERS

Removal, Installation, Adjustment (End Play)

INITIAL SETUP

Tools and Special Tools

Tool kit, general mechanic's (Item 50, WP 0306 00)
Handle, driver (Item 15, WP 0306 00)
Indicator, dial (Item 19, WP 0306 00)
Inserter, ABS ring (Item 20, WP 0306 00)
Pan, drain (Item 29, WP 0306 00)
Wrench, torque, 0-300 lb-in (Item 56, WP 0306 00)
Wrench, torque, 15-75 lb-ft (Item 57, WP 0306 00)
Wrench, torque, 50-250 lb-ft (Item 58, WP 0306 00)

Materials/Parts

Oil, lubricating (Item 28, WP 0305 00)
Gasket (P/N 450755)

Materials/Parts - Continued

Seal, oil (P/N 35066)

Washer, lock (P/N 1229G475)

Washer, lock (P/N MS35338-140) (6)

References

WP 0180 00

Equipment Condition

Front wheel removed (TM 9-2320-302-10)

Front anti-lock brake system (ABS) sensor removed (WP 0122 00)

NOTE

Front axle ABS tone ring replacement is covered in this work package.

REMOVAL

1. Remove pressure relief screw, spring, and pawl assembly (1) from slack adjuster (2).

NOTE

Perform step 2 to obtain enough clearance between brake drum and brakeshoes to remove brake drum.

2. Turn adjusting nut (3) counterclockwise.

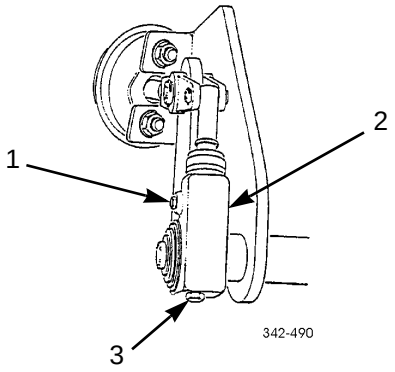

REMOVAL - CONTINUED

3. Remove brake drum (11) from hub (5).

NOTE

Place suitable container under hub opening to catch axle oil.

4. Remove six screws (17), lockwashers (16), hub cap (19), and gasket (15) from hub (5). Discard gasket and lockwashers.
5. Bend back tab on lockwasher (20).
6. Remove jamnut (14), lockwasher (20), lock ring (13), and adjusting nut (21) from axle spindle (10). Discard lockwasher.
7. Remove outer wheel bearing (12) from axle spindle (10). Outer bearing race (4) will remain in bore of hub (5).
8. Remove hub (5) from axle spindle (10).
9. Remove oil seal (9) and inner wheel bearing (8) from hub (5). Discard oil seal.

NOTE

Perform step 10 if bearing races are damaged or if installing new bearings.

10. Remove inner bearing race (7) and outer bearing race (4) from bore of hub (5).

NOTE

ABS tone ring must be replaced if ring is damaged or if replacing hub.

11. To remove ABS tone ring (6) from hub (5), tap lightly beneath ring with a small hammer. Use a circular pattern with light tapping to prevent ring from cocking.

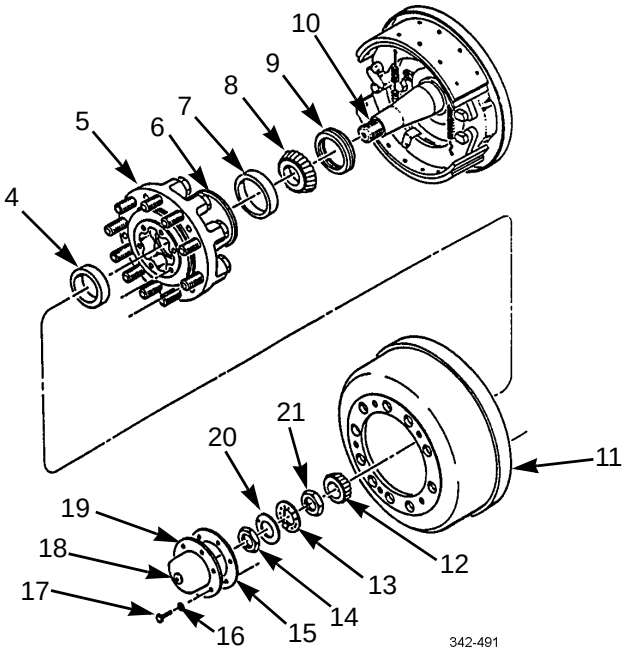

INSTALLATION

WARNING

Brakeshoe linings and inside drum friction surface must be free of all oil/grease and other contaminants prior to assembly to ensure maximum braking capability. Oil/grease and other contaminants may compromise braking that could lead to a serious accident resulting in injury and/or death.

NOTE

Perform step 1 if new bearing races or new bearings are being installed.

1. Install outer bearing race (4) and inner bearing race (7) in bore of hub (5).

NOTE

Ensure ABS tone ring seat on hub is clean and seat is not damaged. If seat is damaged, replace hub.

2. If removed, install ABS tone ring (6) on hub (5) as follows:
   a. Place ABS tone ring (6) on hub ring seat (22) with inside diameter flange of ring up.
   b. Center installation tool over ABS tone ring (6).
   c. Using driver handle and hammer or mallet, drive ABS tone ring (6) onto hub ring seat (22). Inspect ring to ensure complete seating on hub (5).

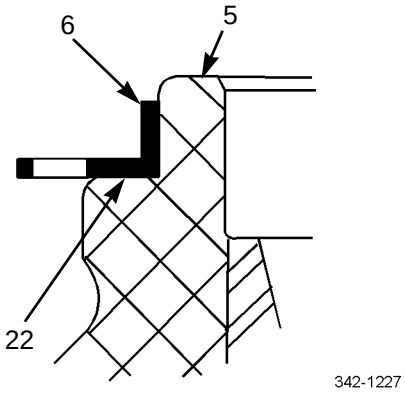

3. Coat two wheel bearings (8 and 12) with clean gear lubricating oil.
4. Install inner wheel bearing (12) and new oil seal (9) in hub (5).
5. Apply coat of gear lubricating oil to axle spindle (10).

CAUTION

To prevent damage to equipment, do not unseat oil seal or wheel bearing when mounting hub.

6. Mount hub (5) fully over axle spindle (10).
7. Fill cavity in hub (5) with gear lubricating oil.
8. Install outer wheel bearing (8) in hub (5).

NOTE

Install adjusting nut with dimple facing out.

9. While turning hub (5), thread adjusting nut (21) on axle spindle (10) until against outer wheel bearing (12).
10. While turning hub (5) in both directions, tighten adjusting nut (21) to 100 lb-ft (136 Nm).
11. Loosen adjusting nut (21) completely to zero torque and spin wheel a few turns. Tighten adjusting nut to 50 lb-ft (68 Nm).
12. Back off adjusting nut (21) 1/6 to 1/4 turn.

INSTALLATION - CONTINUED

13. Install lock ring (13) and new lockwasher (20) on axle spindle (10).
14. Install jamnut (14) on axle spindle (10). Tighten jamnut to 100-150 lb-ft (136-203 Nm).
15. Bend tab of lockwasher (20) over a flat on jamnut (14).

ADJUSTMENT (END PLAY)

1. Attach dial indicator magnetic base to hub (5).
2. Adjust dial indicator so plunger is against spindle (10) end.
3. Position dial indicator parallel to axis of spindle (10).
4. Grasp hub (5) at 3 and 9 o’clock positions.
5. Push and pull hub (5) in and out while rotating hub approximately 45 degrees.
6. Note end play while rotating hub (5) until dial indicator tip is in same position before rotation began.
7. Acceptable end play is .001-.005 inches.
8. If end play is not within tolerance, loosen jamnut (14) and either back off or tighten adjusting nut (21) as required.
9. Repeat steps 1 through 7 until acceptable end play is achieved.
10. Install hub cap (19) and new gasket (15) on hub (5) and with six screws (17) and new lockwashers (16). Tighten screws to 180 lb-in (20 Nm).
11. Remove hub filler cap (18) and add gear lubricating oil to level of filler hole. Wait 5 minutes and add more oil, as needed.
12. Install hub filler cap (18).
13. Install brake drum (11) over hub (5).

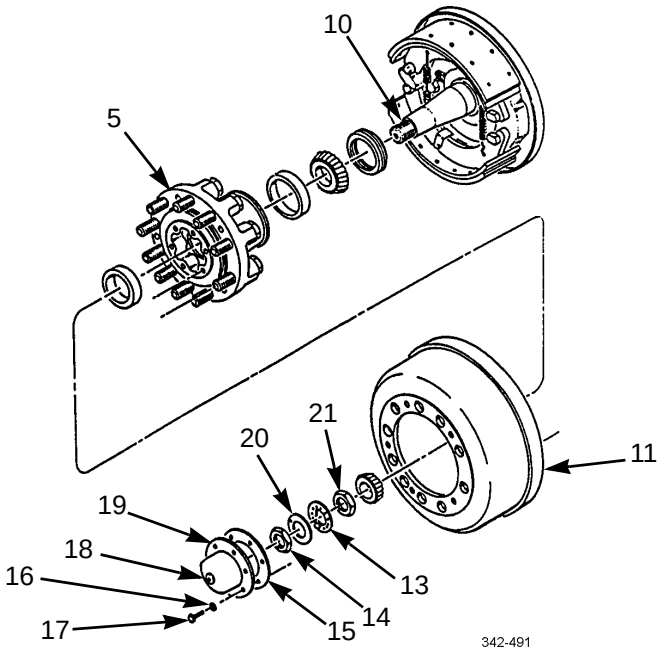

ADJUSTMENT (END PLAY) - CONTINUED

14. Install pressure relief screw, spring, and pawl assembly (1) in slack adjuster (2). Tighten to 180-240 lb-in (20-27 Nm).

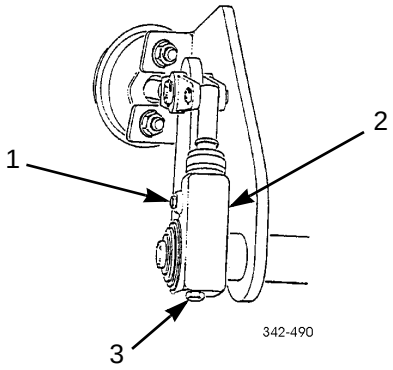

15. Install front wheel (TM 9-2320-302-10).
16. Adjust slack adjuster (WP 0180 00).
17. Install front anti-lock brake system (ABS) sensor (WP 0122 00).

END OF WORK PACKAGE

FRONT HUB, DRUM, WHEEL BEARINGS, AND SEAL REPLACEMENT (M916A3, M917A2) 0208 00

THIS WORK PACKAGE COVERS

Disassembly, Assembly

INITIAL SETUP

Tools and Special Tools

Tool kit, general mechanic's (Item 50, WP 0306 00)

Driver, cup (Item 11, WP 0306 00)

Inserter, ABS ring (Item 20, WP 0306 00)

Installer, seal (Item 22, WP 0306 00)

Installer, seal (Item 23, WP 0306 00)

Protector (Item 36, WP 0306 00)

Spanner (Item 42, WP 0306 00)

Materials/Parts

Adhesive, loctite (Item 3, WP 0305 00)

Adhesive, loctite (Item 4, WP 0305 00)

Materials/Parts - Continued

Oil, lubricating (Item 28, WP 0305 00)

O-ring (P/N TDA SA75500845)

Ring, snap (P/N SA75500605)

Seal, oil (P/N SA88900318) (2)

Washer, lock (P/N EA88350338)

References

WP 0023 00

WP 0180 00

Personnel Required

Two

Equipment Condition

Front wheel removed (TM 9-2320-302-10)

NOTE

Front axle ABS tone ring is covered in this work package.

DISASSEMBLY

1. Remove pressure relief screw (1), spring and pawl assembly (4,5) from slack adjuster (2).

NOTE

Perform step 2 to obtain enough clearance between brake drum and brakeshoes to remove brake drum.

2. Rotate adjusting nut (3) counterclockwise.

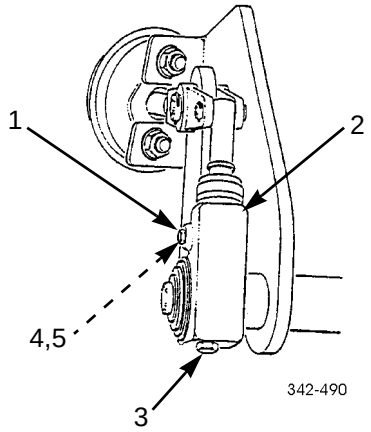

3. Rotate brakedrum (26) until drain plug (25) of planet gear carrier assembly (23) is at 6 o'clock position.
4. Remove drain plug (25) and allow oil to drain. Loosely install drain plug.
5. Remove two drum centering screws (27) holding brake drum (26) to planet gear carrier assembly (23).
6. Remove brake drum (26).
7. Remove three screws (24) from planet gear carrier assembly (23).
8. Using three puller screws, insert screws into planet gear carrier assembly (23). Evenly tighten screws to remove planet gear carrier assembly from wheel hub (17).
9. Remove o-ring (21) from wheel hub (17). Discard O-ring.
10. Remove thrust button (28), snap ring (29) and sun gear (30) from spindle (6). Discard snap ring.
11. Bend tab(s) of lockwasher (32) to unlock spindle nut (31).
12. Using spanner tool #5229, remove spindle nut (31) and lockwasher (32). Discard lockwasher.
13. While holding wheel hub (17) assembly upward, remove ring gear carrier assembly (33).
14. Using drift tool, remove taper roller bearing (21) from ring gear carrier (33).
15. Remove retaining ring (20), guide ring (19), and oil seal (18).
16. Slide protector tool #5260 over spindle (6).
17. Remove wheel hub (17) and protector tool from spindle (6).
18. Remove ABS tone ring (16) from wheel hub (17) by gently tapping around circumference of tone ring.
19. Using puller tool, remove CTIS seal (10), oil seal (11) and taper roller bearing (12).
20. Remove retaining ring (13), guide ring (14) and oil seal (15).
21. Clean spindle (6) and mark position of brake assembly (8) on wheel spindle.
22. Remove 16 screws (9) and brake assembly (8) from spindle (6).

DISASSEMBLY - CONTINUED

23. Remove spindle ring (7) from spindle (6).

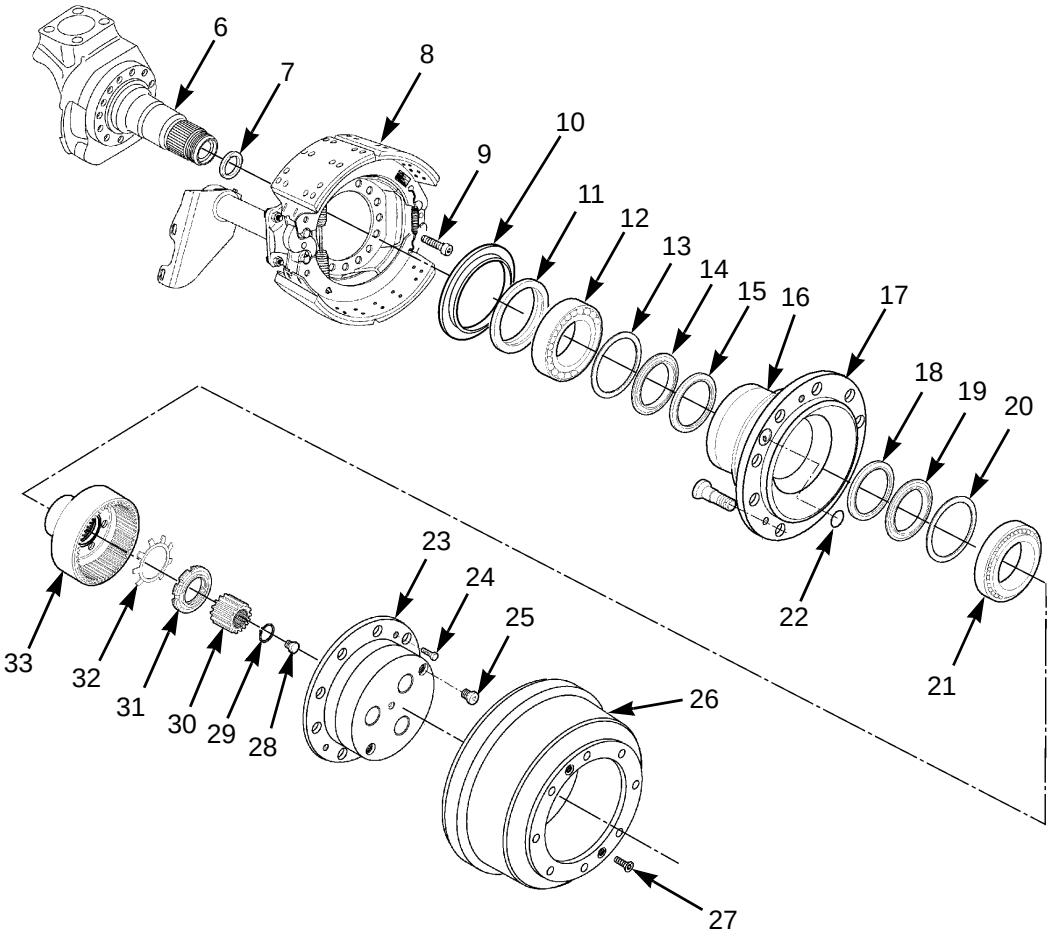

ASSEMBLY


WARNING

Adhesives, solvents, and sealing compounds can burn easily, can give of harmful vapors, and are harmful to skin and clothing. To avoid injury or death, keep away from open fire and use in a well-ventilated area. If adhesive, solvent or sealing compound gets on skin or clothing, wash immediately with soap and water.

ASSEMBLY - CONTINUED

WARNING

Brakeshoe linings and inside drum friction surface must be free of all oil/grease and other contaminants prior to assembly to ensure maximum braking capability. Oil/grease and other contaminants may compromise braking that could lead to a serious accident resulting in injury and/or death.

NOTE

Apply a thin coat of lubricating oil to surfaces of oil seals, bearings, and bearing cups at assembly.

1. Apply thin coat of adhesive sealant (loctite 648) to threads of spindle (6) and install spindle ring (7).
2. Position brake assembly (8) on spindle (6).
3. Apply adhesive sealant (loctite 242) to threads of 16 screws (9) and install brake assembly (8). Tighten screws to 205 lb-ft (278 Nm).
4. Place ABS tone ring (16) on wheel hub (17).
5. Center inserter tool over ABS tone ring (16).
6. Using handle and hammer or mallet, drive ABS tone ring (16) onto wheel hub (17). Ensure ABS tone ring is completely seated around circumference of wheel hub.
7. Using seal installer tool #5270, install oil seal (15), guide ring (14), and retaining ring (13) to wheel hub (17).
8. Using cup driver tool #5044, install taper roller bearing (12), oil seal (11), and CTIS seal (10) to wheel hub (17).
9. Using seal installer tool #5270, install oil seal (18), guide ring (19), and retaining ring (20).

WARNING

Wear protective gloves, clothing, goggles, and use proper tools when handling hot components. Failure to follow this warning may result in serious injury to personnel.

10. Heat taper roller bearing (12) to 175º F (80º C) and install taper roller bearing (21) to ring gear carrier (33).
11. Install new O-ring (22) to wheel hub (17).
12. Slide protector over spindle (6) and position wheel hub (17) on spindle. Remove protector.
13. While holding wheel hub (17) upward, position ring gear carrier (33) assembly on spindle (6).
14. Install new lockwasher (32) and spindle nut (31) to spindle (6).
15. Using spanner tool #5229 and torque wrench, tighten spindle nut (31) to 221 lb-ft (300 Nm).
16. Rotate ring gear carrier (23) while tapping on ring gear carrier with a soft-faced mallet. Confirm that ring gear carrier is fully seated.
17. Again tighten spindle nut (31) to 221 lb-ft (300 Nm).

NOTE

After spindle nut is loosened, if a tab of lockwasher does not align with a slot of spindle nut, TIGHTEN spindle nut slightly.

18. Loosen spindle nut (31) 1/8 turn and bend tab of lockwasher (32) into slot of spindle nut.
19. Install thrust button (28), sun gear (30), and new snap ring (29) on shaft.

ASSEMBLY - CONTINUED

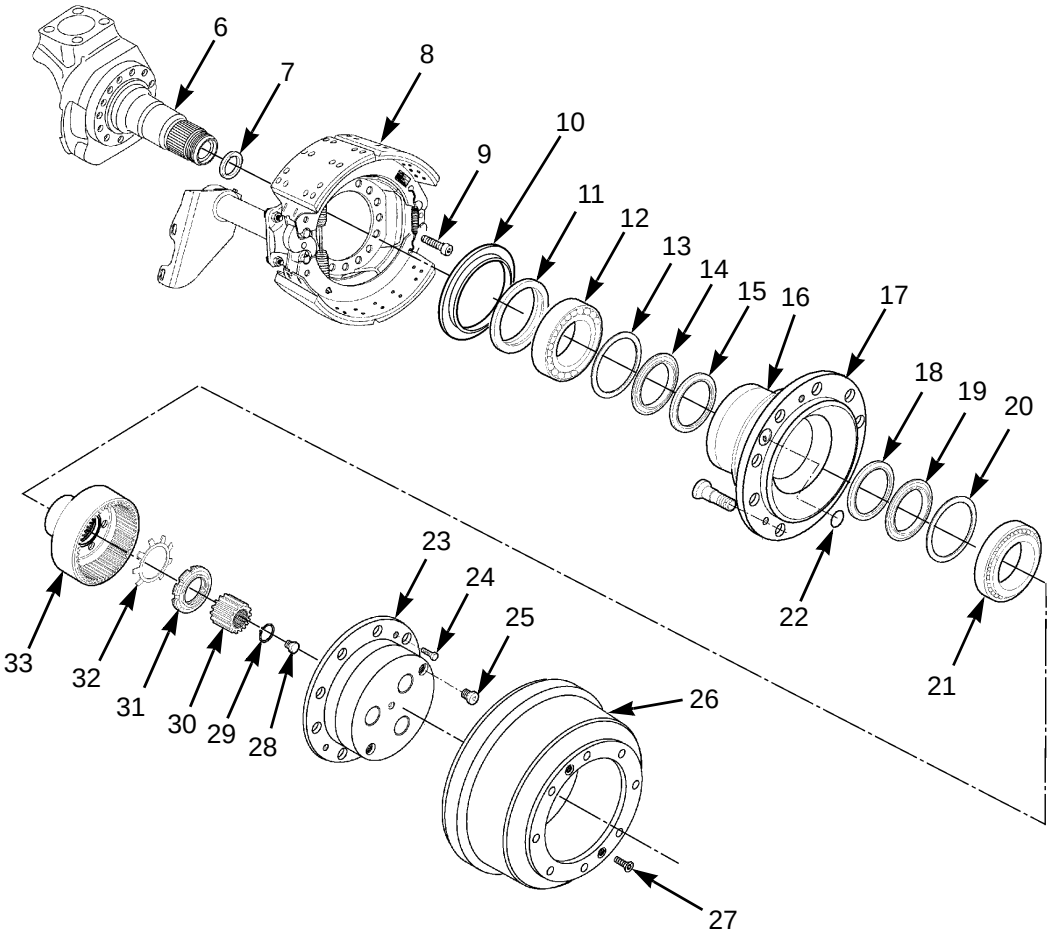

20. Measure dimension A of planet gear carrier (23) and record this dimension.
21. Measure dimension B of thrust button (28) to surface of wheel hub (17) and record this dimension.
22. Subtract dimension B from dimension A. The resulting free play should be .020 to .060 in. (0.51 to 1.52 mm).
23. To DECREASE free play, add shim(s) under head of thrust button (28).
24. To INCREASE free play, remove shim(s) under head of thrust button (28).
25. Install planet gear carrier assembly (23) to wheel hub (17) with three screws (24). Tighten screws to 37 lb-ft (50.2 Nm).
26. Install brake drum (26) with three screws (27).

ASSEMBLY - CONTINUED

27. Rotate adjusting nut (3) clockwise.
28. Install spring and pawl assembly (4,5) and pressure relief screw (1) on slack adjuster (2).

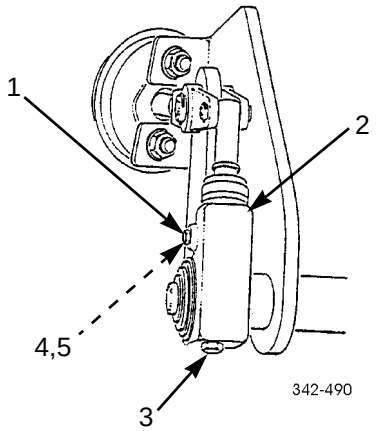

29. Fill hub with oil (WP 0023 00).
30. Install front wheel (TM 9-2320-302-10).
31. Adjust slack adjuster (WP 0180 00).

END OF WORK PACKAGE

REAR HUB, DRUM, WHEEL BEARINGS, AND SEAL REPLACEMENT 0209 00

THIS WORK PACKAGE COVERS

Removal, Installation, Adjustment (End Play)

INITIAL SETUP

Tools and Special Tools

Tool kit, general mechanic's (Item 50, WP 0306 00)

Handle, installer (Item 15, WP 0306 00)

Indicator, dial (Item 19, WP 0306 00)

Installation tool, ABS tone ring (Item 20, WP 0306 00)

Pan, drain (Item 29, WP 0306 00)

Socket, socket wrench (Item 40, WP 0306 00)

Wrench, torque, 15-75 lb-ft (Item 57, WP 0306 00)

Wrench, torque, 50-250 lb-ft (Item 58, WP 0306 00)

Wrench, torque, 0-600 lb-ft (Item 59, WP 0306 00)

Materials/Parts

Gasket (P/N 2208x440)

Seal, oil (P/N 1277701)

Oil, lubricating (Item 28, WP 0305 00)

References

TM 9-2320-302-10

Equipment Condition

Rear brakes caged (TM 9-2320-302-10)

Rear wheel removed (TM 9-2320-302-10)

Rear anti-lock brake system (ABS) sensor removed (rear-rear axle only) (WP 0205 00)

NOTE

Rear-rear axle ABS tone ring replacement is covered in this work package.

REMOVAL

NOTE

- Procedure is the same for both sides.
- Procedure is the same for both rear axles except as noted.

1. Remove brake drum (7) from hub (5).

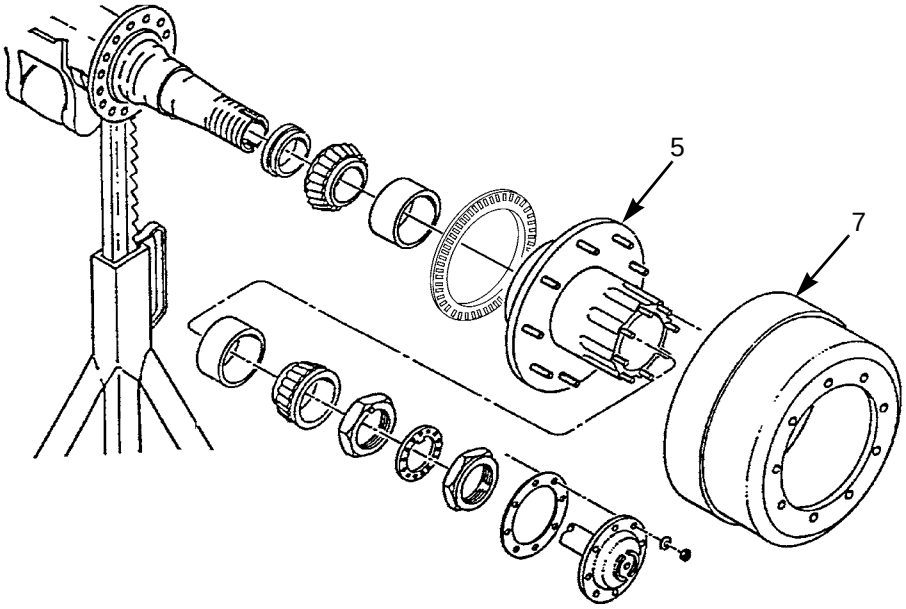

REMOVAL - CONTINUED

CAUTION

Ensure axle hub studs are not damaged during axle shaft removal. If damage occurs, replace stud to allow proper installation of tapered dowels and nuts.

NOTE

Have suitable container available to catch oil that will spill when axle shaft is removed.

2. Remove eight nuts (8), washers (9), axle shaft (10), and gasket (11). Discard gasket.
3. Remove jamnut (12), lock ring (13), and adjusting nut (14) from axle spindle (1).
4. Remove outer wheel bearing (15) from axle spindle (1).
5. Remove hub (5) from axle spindle (1).
6. Remove and discard seal (2) from hub (5).
7. Remove inner wheel bearing (3) from hub (5).
8. If damaged, remove eight studs (6) from hub (5).

NOTE

Perform step 9 if bearing cups are damaged or if installing new wheel bearings.

9. Using brass drift pin, carefully remove and discard two bearing cups (4) from hub (5).

NOTE

- The following step applies only to rear-rear axle hub.
- ABS tone ring must be replaced if ring is damaged or if replacing hub.

To remove ABS tone ring (16) from hub (5), use a small pry bar or hammer to gently pry off ring. Use a circular pattern around ring to prevent cocking.

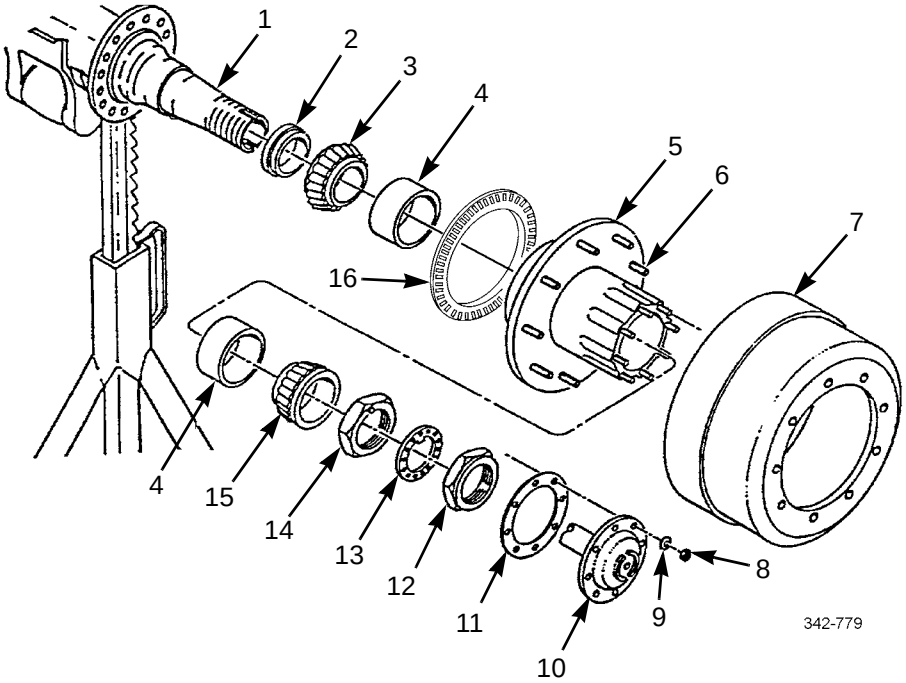

INSTALLATION

WARNING

Brakeshoe linings and inside drum friction surface must be free of all oil/grease and other contaminants prior to assembly to ensure maximum braking capability. Oil/grease and other contaminants maya compromise braking that could lead to a serious accident resulting in injury and/or death.

NOTE

- Procedure is the same for both sides.
- Procedure is the same for both rear axles except as noted.

CAUTION

Bearings and bearing cups must be replaced as a set. Failure to do so could result in premature damage to either bearings or bearing cups.

1. If removed, use a brass draft pin to carefully install two bearing cups (4) in hub (5).
2. If removed, install eight studs (6) in hub (5).

NOTE

- The following step applies only to rear-rear axle hub.
- Ensure ABS tone ring seat on hub is clean and seat is not damaged. If seat is damaged, replace hub.

3. If removed, install ABS tone ring (16) on hub (5) as follows:
   a. Place ABS tone ring (16) on hub ring seat (17) with inside diameter flange of ring up.
   b. Center installation tool over ABS tone ring (16).
   c. Using installer handle and hammer or mallet, drive ABS tone ring (16) onto hub ring seat (17). Inspect ring to ensure complete seating on hub (5).

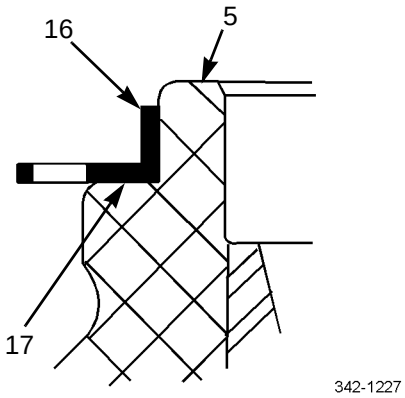

4. Coat inner wheel bearing (3) with gear lubricating oil.
5. Install inner wheel bearing (3) in hub (5).
6. Install new oil seal (2) in hub (5).
7. Install hub (5) on axle spindle (1) and fill cavity with gear lubricating oil.
8. Coat outer wheel bearing (15) with gear lubricating oil.
9. Install outer wheel bearing (15) in hub (5).

INSTALLATION - CONTINUED

NOTE

Adjusting nut can be identified by protrusion on one side.

10. With protrusion facing out, install adjusting nut (14) until adjusting nut contacts outer wheel bearing (15).

CAUTION

Hub must be rotated in both directions while tightening adjusting nut. Failure to do so will result in premature bearing failure.

11. Tighten adjusting nut (14) to 100 lb-ft (136 Nm).
12. Loosen adjusting nut (14) completely, then tighten to 50 lb-ft (68 Nm).
13. Loosen adjusting nut (14) 1/4 turn.

NOTE

During step 13, it may be necessary to tighten adjusting nut to align protrusion with alignment hole in lock ring.

14. Install lock ring (13) on axle spindle (1).
15. Install jamnut (12) on axle spindle (1). Tighten jamnut to 250-400 lb-ft (339-542 Nm).

ADJUSTMENT (END PLAY)

1. Attach dial indicator magnetic base to hub (5).
2. Adjust dial indicator so plunger is against spindle (1) end.
3. Position dial indicator parallel to axis of spindle (1).
4. Grasp hub (5) at 3 and 9 o’clock positions.
5. Push and pull hub (5) in and out while rotating hub approximately 45 degrees.
6. Note end play while rotating hub (5) until dial indicator tip is in same position before rotation began.
7. Acceptable end play is .001 - .005 inches.
8. If end play is not within tolerance, loosen jamnut (12) and either back off or tighten adjusting nut (14) as required.
9. Repeat steps 1 through 7 until acceptable end play is achieved.
10. Install new gasket (11) on studs (6).

NOTE

Splines on axle shaft must engage in differential before axle flange will seat against hub.

11. Install axle shaft (10) with eight washers (9) and nuts (8). Tighten nuts to 155 lb-ft (210 Nm).
12. Install brake drum (7) on hub (5).

ADJUSTMENT (END PLAY) - CONTINUED

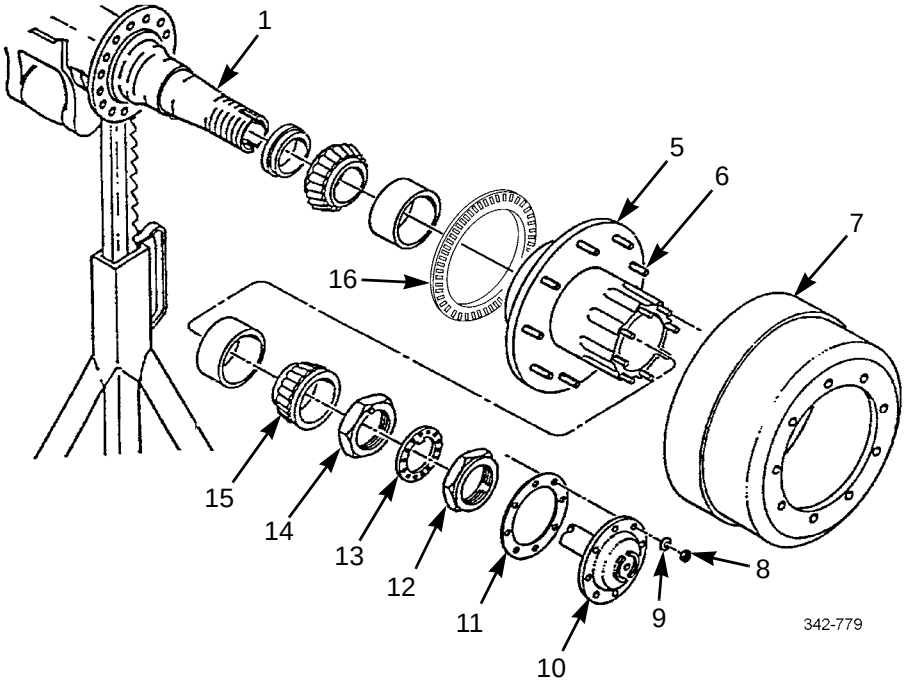

13. Remove plug (18) and check oil level in accordance with Unit PMCS. Add oil as needed (WP 0021 00).
14. Install plug (18) and tighten to 35 lb-ft (47 Nm).

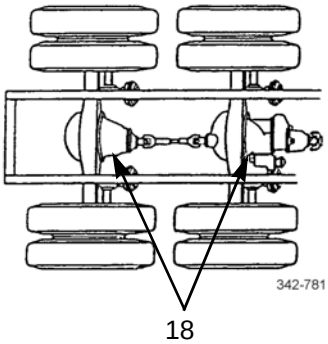

15. Install rear wheels (TM 9-2320-302-10).
16. Install rear anti-lock brake system (ABS) sensor (rear-rear axle only) (WP 0205 00).
17. Uncage rear brakes (TM 9-2320-302-10).

END OF WORK PACKAGE

REAR AXLE CTIS SEAL REPLACEMENT (M916A3, M917A2) 0210 00

THIS WORK PACKAGE COVERS

Disassembly, Assembly

INITIAL SETUP

Tools and Special Tools

Tool kit, general mechanic's (Item 50, WP 0306 00)

Materials/Parts

Oil, lubricating (Item 28, WP 0305 00)

Seal (P/N A-1205-D-2162) (2)

Equipment Condition

Rear hub, drum, wheel bearings, and seal removed (WP 0208 00)

DISASSEMBLY

1. Remove two snap rings (1), outer seal guide (2) and inner seal guide (5) from hub (4).

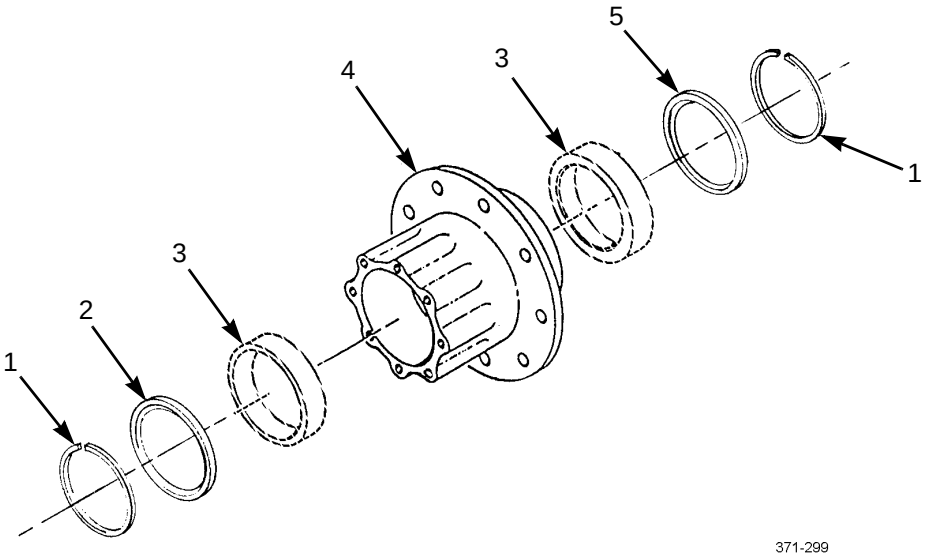

NOTE

Note position of CTIS seals for assembly.

2. Using puller, remove two CTIS seals (3). Discard seals.

ASSEMBLY

1. Apply lubricating oil to inner surface of two new CTIS seals (3).
2. With lips of CTIS seals (3) facing inward, press CTIS seals into hub (4).
3. Install inner seal guide (5), outer seal guide (2), and two snap rings (1).

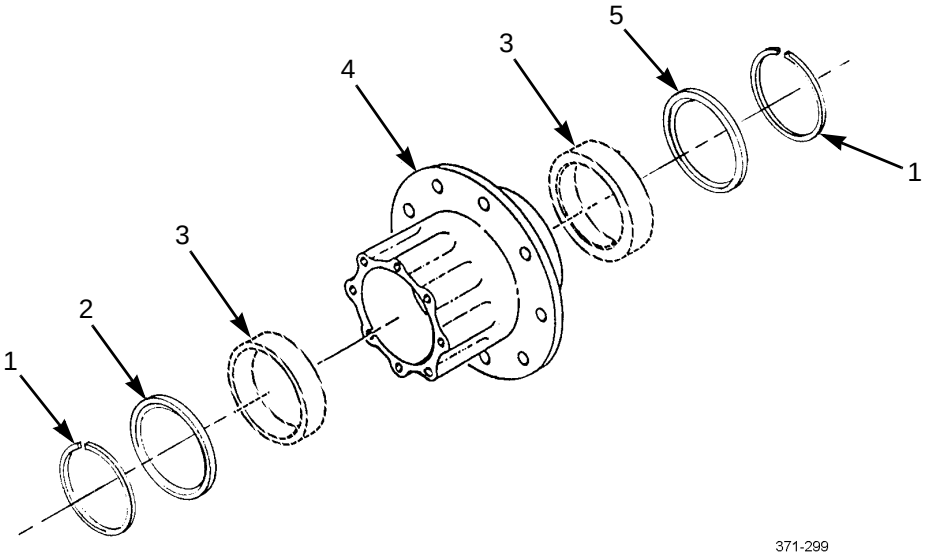

4. Install rear hub, drum, wheel bearings and seal (WP 0209 00).

END OF WORK PACKAGE

CTIS PNEUMATIC CONTROL UNIT (PCU) MAINTENANCE (M916A3, M917A2) 0211 00

THIS WORK PACKAGE COVERS

Removal, Disassembly, Assembly, Installation

INITIAL SETUP

Tools and Special Tools

Tool kit, general mechanic's (Item 50, WP 0306 00)

Goggles, industrial (Item 14, WP 0306 00)

Materials/Parts

Adhesive (Item 2, WP 0305 00)

Compound, pipe sealing (Item 13, WP 0305 00)

Oil, lubricating (Item 22, WP 0305 00)

Tags, marker (Item 34, WP 0305 00)

Materials/Parts - Continued

Washer, lock (P/N 23-00701-100)

Kit, repair (P/N 673870)

References

TM 9-2320-302-10

Equipment Condition

Master battery switch in OFF position (TM 9-2320-302-10)

Air system drained (TM 9-2320-302-10)

REMOVAL

WARNING

Always wear eye protection when disconnecting air lines. Residual air will be expelled. Failure to follow this warning may result in serious eye injury.

NOTE

- CTIS PCU is located behind driver's seat on cab wall.
- Tag all lines prior to disconnecting to aid in connecting.

REMOVAL - CONTINUED

1. Disconnect hose connector (12) from adapter (11) at port marked “to axles”.
2. Disconnect hose connector (13) from adapter (14) at port marked “supply”.
3. Disconnect electrical connector (3) from pressure transducer (4).
4. Disconnect electrical connector (1) from receptacle (2).
5. Disconnect hose connector (16) from adapter (15) on port marked “vent”.
6. Remove three bolts (8), three nuts (9), three lockwashers (10), and PCU (7) from bracket (6). Discard lockwashers.
7. Remove six bolts (5) and bracket (6), if damaged.

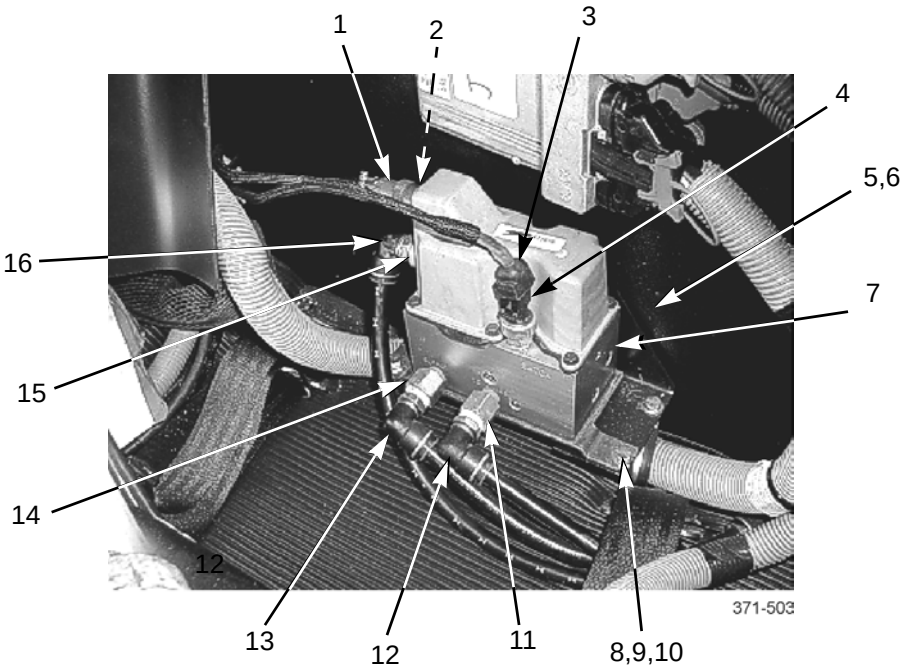

DISASSEMBLY

1. Remove adapter (2) from port marked “vent”.
2. Remove adapter (11) from port marked “to axles”.
3. Remove adapter (14) from port marked “supply”.

DISASSEMBLY - CONTINUED

4. Remove six screws (20), mounting plate (19), and gasket (18) from PCU (7).

NOTE

To ease in installation, note that center cartridge contains a cross-tipped screw in center.

5. Gently remove three cartridges (17) through channel ports in PCU (7).

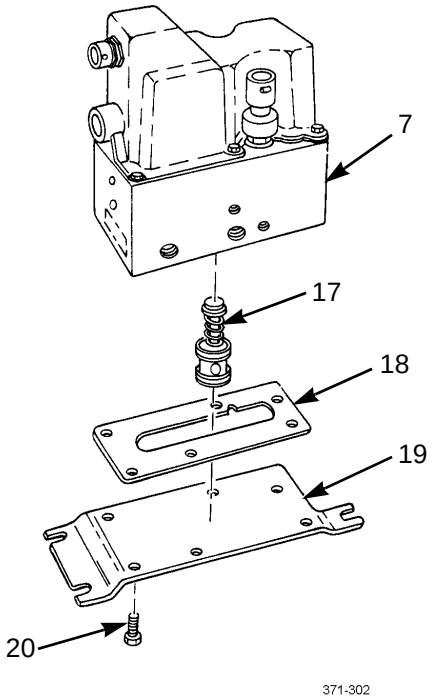

DISASSEMBLY - CONTINUED

6. Remove six screws (23) and lift cover (22) with gasket off of PCU (7).
7. Remove harness nut (21) and harness connector (24) from cover (22).
8. Remove and discard preformed packing (31) from harness connector (24).
9. Remove and discard gasket (32) from cover (22).
10. Remove pressure transducer (4).
11. Remove nut (30), metal gasket (29), and solenoid protector (28) from each solenoid (27).
12. Tag and remove each solenoid (27) from spool (26).
13. Remove relief valve (25).

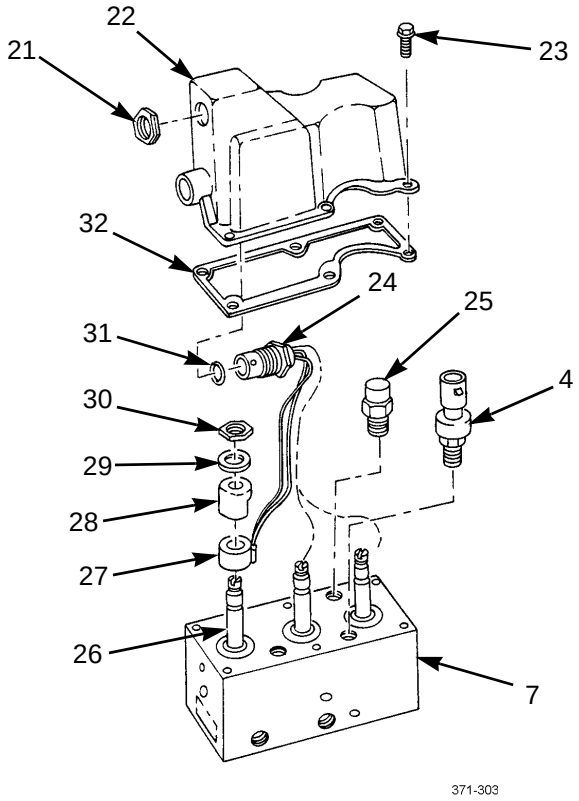

ASSEMBLY

1. Install relief valve (25).
2. Install gasket (32) on cover (22).
3. Install preformed packing (31) on harness connector (24).
4. Insert harness connector (24) through hole in cover (22) and install harness nut (21).
5. Install solenoid (27) on each spool (26) and remove tags.

ASSEMBLY - CONTINUED

6. Install solenoid protector (28) on each solenoid (27).
7. Install metal gasket (29) with printed side up on each solenoid protector (28).
8. Install nut (30) with beveled edge down on each spool (26).
9. Apply adhesive to threads on pressure transducer (4).
10. Install pressure transducer (4) ensuring electrical connector lock is oriented outward. Torque to 16-20 lb-ft (22-27 Nm).
11. Tuck solenoid wires next to solenoids (27) and away from relief valve (25) while positioning cover (22) on PCU (7).
12. Install cover (22) and six screws (23). Torque to 40-45 lb-in (4-5 Nm).
13. Lube preformed packings on cartridges (17) and install cartridges into PCU (7) in same order as removed.
14. Install gasket (18) and mounting plate (19) with raised side against PCU (7) and secure with six screws (20). Torque screws to 40-45 lb-in (4-5 Nm).

WARNING

- Ensure that all air lines and fittings are clear of debris and excess pipe sealing compound does not enter air lines or fittings. Failure to follow this warning could result in injury to personnel and damage to equipment.
- Adhesives and sealing compounds can burn easily, can give off harmful vapors, and are harmful to skin and clothing. To avoid injury or death, keep away from open fire and use in a well-ventilated area. If adhesive or sealing compound contacts skin or clothing, wash immediately with soap and water.

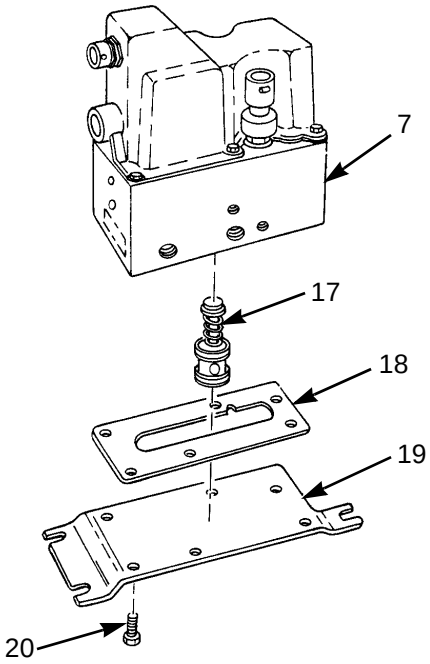

ASSEMBLY - CONTINUED

NOTE

Apply thin coat of sealant compound to all male threads.

15. Install elbow (2) in port marked “vent”.
16. Install adapter (14) in port marked “supply”.
17. Install adapter (11) in port marked “to axles”.

INSTALLATION

1. Install bracket (6) and secure with six bolts (5).
2. Install PCU (7) on bracket (6) and secure with three bolts (8), three new lockwashers (10), and three nuts (9).


WARNING


- Ensure that all air lines and fittings are clear of debris and excess pipe sealing compound does not enter air lines or fittings. Failure to follow this warning could result in injury to personnel and damage to equipment.
- Adhesives and sealing compounds can burn easily, can give off harmful vapors, and are harmful to skin and clothing. To avoid injury or death, keep away from open fire and use in a well-ventilated area. If adhesive or sealing compound contacts skin or clothing, wash immediately with soap and water.

NOTE

Apply thin coat of sealant compound to all male threads.

3. Connect hose connector (16) on adapter (15) at port marked “vent”.
4. Connect electrical connector (1) to receptacle (2).
5. Connect hose connector (13) to adapter (14) at port marked “supply”.
6. Connect hose connector (12) to adapter (11) at port marked “to axles”.
7. Connect electrical connector (3) to pressure transducer (4).
8. Start vehicle and check operation of CTIS (TM 9-2320-302-10).

INSTALLATION - CONTINUED

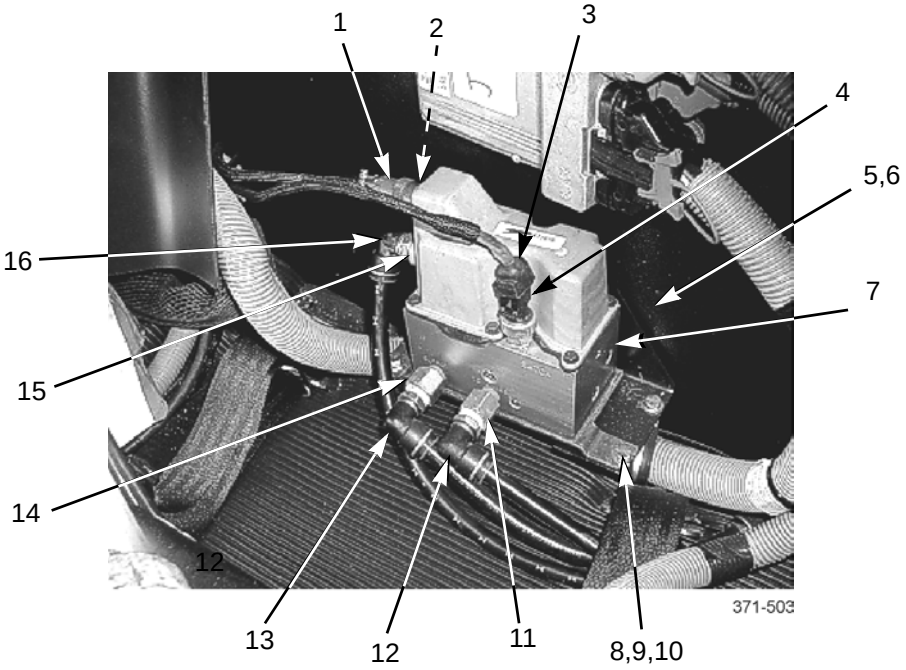

END OF WORK PACKAGE

CTIS PRESSURE SWITCH REPLACEMENT (M916A3, M917A2) 0212 00

THIS WORK PACKAGE COVERS

Disassembly, Assembly

INITIAL SETUP

Tools and Special Tools

Tool kit, general mechanic's (Item 50, WP 0306 00)

Materials/Parts

Compound, pipe sealing (Item 13, WP 0305 00)

Strap, tiedown (Item 34, WP 0305 00)

Reference

TM 9-2320-302-10

Equipment Condition

Air system drained (TM 9-2320-302-10)

Master battery switch in OFF position (TM 9-2320-302-10)

REMOVAL

WARNING

Always wear eye protection when disconnecting air lines. Residual air will be expelled. Failure to follow this warning may result in serious eye injury.

1. Disconnect CTIS wiring harness connector (4) from pressure switch connector (3).
2. Remove pressure switch (2) from air tank tee (1).

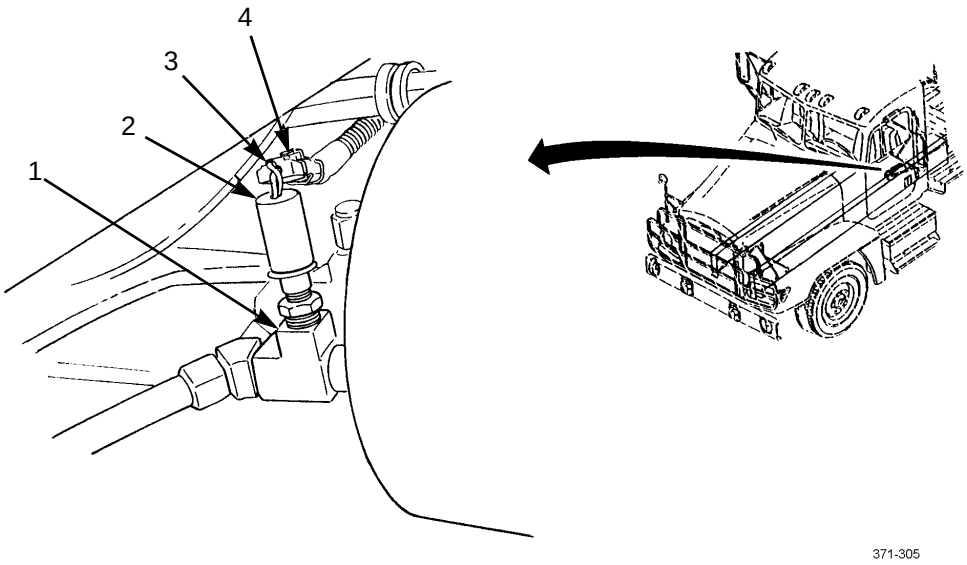

INSTALLATION

NOTE

Apply a thin coat of thread sealing compound on male threads of fittings.

1. Install pressure switch (2) on air tank tee (1).
2. Connect CTIS wiring harness connector (4) to pressure switch connector (3).
3. Start vehicle and check operation of CTIS (TM 9-2320-302-10).

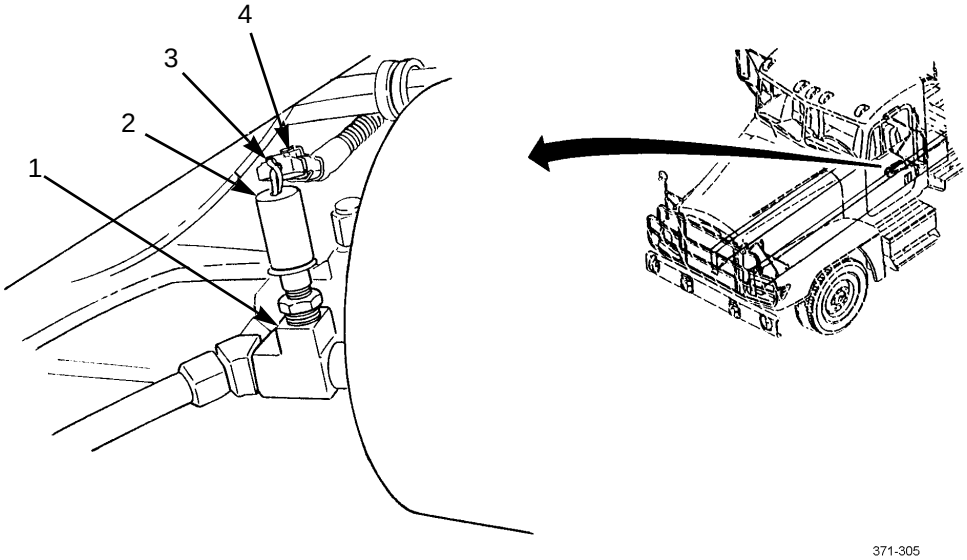

END OF WORK PACKAGE

CTIS WHEEL VALVE AND HOSE REPLACEMENT, FRONT (M916A3, M917A2) 0213 00

THIS WORK PACKAGE COVERS

Removal, Installation

INITIAL SETUP

Tools and Special Tools

Tool kit, general mechanic's (Item 50, WP 0306 00)

Goggles, industrial (Item 14, WP 0306 00)

Materials/Parts

Compound, pipe sealing (Item 13, WP 0305 00)

Filter, air (P/N 599791)

Reference

TM 9-2320-302-10

Equipment Condition

Vehicle air system drained (TM 9-2320-302-10)

REMOVAL

WARNING

Always wear eye protection when disconnecting air lines. Residual air will be expelled. Failure to follow this warning may result in serious eye injury.

CTIS WHEEL VALVE AND HOSE REPLACEMENT, FRONT (M916A3, M917A2) - CONTINUED

0213 00

REMOVAL - CONTINUED

1. Remove valve cap (9) on wheel valve stem (11) and deflate tire by depressing stem on valve core (10). Reinstall valve cap.
2. Disconnect one end of hose (14) from tire valve stem (15).
3. Disconnect opposite end of hose (14) from wheel valve connector (13).
4. Remove wheel valve connector (13) and air filter (12) from wheel valve (8). Discard air filter.
5. Disconnect one end of hose (4) from hub air port elbow (2).
6. Remove hub air port elbow (2) from wheel hub air port (1).
7. Disconnect opposite end of hose (4) from wheel valve connector (5).
8. Remove wheel valve connector (5) from wheel valve (8).
9. Remove two screws (7), lockwashers (6), wheel valve (8), and two spacers (3).

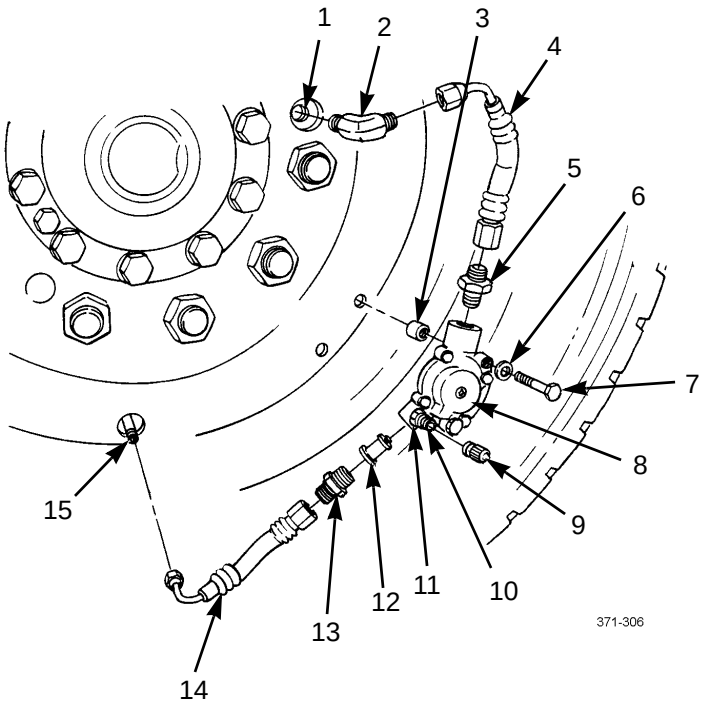

INSTALLATION

1. Install two spacers (3), wheel valve (8), two washers (6), and two screws (7).
2. Install new air filter (12) with open end out in wheel valve (8).

INSTALLATION - CONTINUED

WARNING

- Ensure that all air lines and fittings are clear of debris and excess pipe sealing compound does not enter air lines or fittings. Failure to follow this warning could result in injury to personnel and damage to equipment.
- Adhesives and sealing compounds can burn easily, can give off harmful vapors, and are harmful to skin and clothing. To avoid injury or death, keep away from open fire and use in a well-ventilated area. If adhesive or sealing compound contacts skin or clothing, wash immediately with soap and water.

NOTE

Apply thin coat of sealing compound to all male threads.

3. Install wheel valve connector (13) on wheel valve (8).
4. Connect one end of hose (14) to wheel valve connector (13).
5. Connect opposite end of hose (14) to tire valve stem (15).
6. Install wheel valve connector (5) on wheel valve (8).
7. Install one end of hose (4) on wheel valve connector (5).
8. Install hub air port elbow (2) with open elbow port perpendicular to outer edge of wheel on wheel hub air port (1).

NOTE

Ensure hose is not kinked after connecting to elbow. Rotate elbow, if necessary.

9. Connect opposite end of hose (4) to hub air port elbow (2).
10. Check operation of CTIS (TM 9-2320-302-10).

END OF WORK PACKAGE

CTIS WHEEL VALVE AND HOSE REPLACEMENT, REAR (M916A3, M917A2) 0214 00

THIS WORK PACKAGE COVERS

Removal, Installation

INITIAL SETUP

Tools and Special Tools

Tool kit, general mechanic's (Item 50, WP 0306 00)

Wrench, torque, 50-250 lb-ft (Item 58, WP 0306 00)

Materials/Parts

Compound, pipe sealing (Item 13, WP 0305 00)

Filter, air (P/N 599791)

References

TM 9-2320-302-10

Equipment Condition

Vehicle air system drained (TM 9-2320-302-10)

NOTE

Both valves and associated hoses are replaced the same.

CTIS WHEEL VALVE AND HOSE ASSEMBLY REPLACEMENT, REAR (M916A3, M917A2) - CONTINUED

0214 00

REMOVAL

WARNING

Always wear eye protection when disconnecting air lines. Residual air will be expelled. Failure to follow this warning may result in serious eye injury.

1. Remove valve cap (12) and deflate tire by depressing stem on valve core (13). Reinstall valve cap.
2. Disconnect one end of hose (15) from valve stem (1).
3. Disconnect opposite end of hose (15) from adapter (14) on wheel valve (7).
4. Remove adapter (14) from wheel valve (7).
5. Disconnect hose (3) from wheel port connector (2).
6. Disconnect opposite end of hose (3) from adapter (5) on wheel valve (7).
7. Remove adapter (5) and air filter (6) from wheel valve (7).
8. Remove two nuts (8), four washers (9), and wheel valve (7) from bracket (4).
9. Repeat steps 1 through 8 for other wheel valve.
10. If bracket is damaged, remove two hub nuts (10), washers (11), and bracket (4).

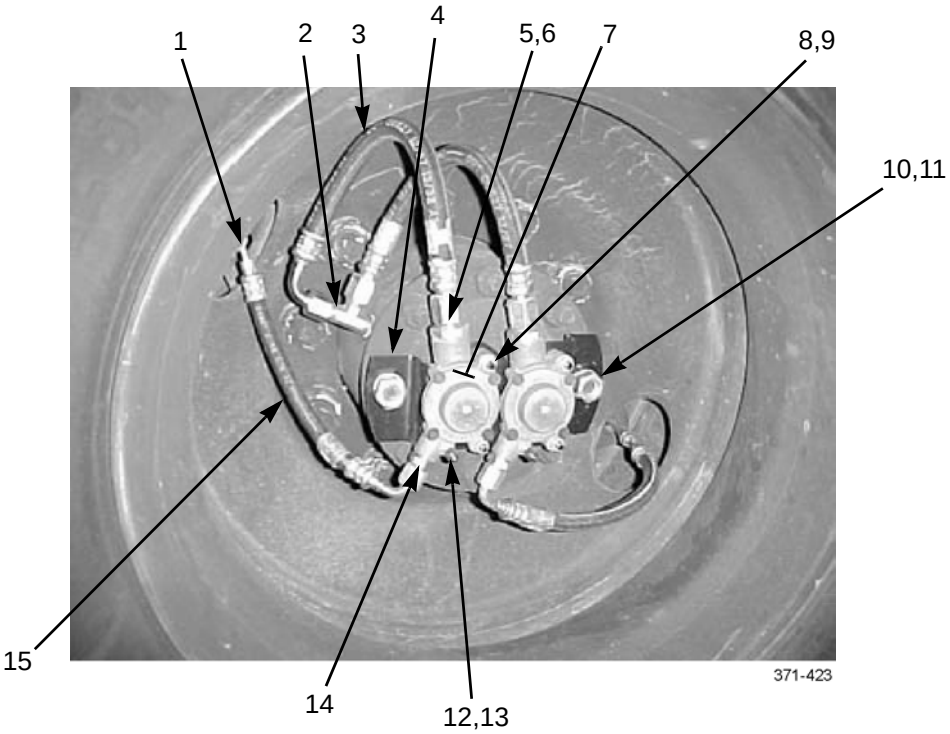

INSTALLATION

1. If bracket (4) was removed, position bracket on hub and install two hub nuts (10) and washers (11).
2. Torque nuts to 155 lb-ft (210 Nm).
3. Position wheel valve (7) on bracket (4) and install two bolts (8) and four washers (9).
4. Install new air filter (6) with open end out in wheel valve (7).

WARNING

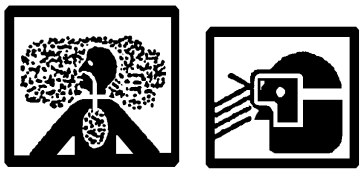

- Ensure that all air lines and fittings are clear of debris and excess pipe sealing compound does not enter air lines or fittings. Failure to follow this warning could result in injury to personnel and damage to equipment.
- Adhesives and sealing compounds can burn easily, can give off harmful vapors, and are harmful to skin and clothing. To avoid injury or death, keep away from open fire and use in a well-ventilated area. If adhesive or sealing compound contacts skin or clothing, wash immediately with soap and water.

5. Apply pipe sealing compound on adapter (5) threads.
6. Install adapter (5) on wheel valve (7).
7. Connect hose (3) to adapter (5) on wheel valve (7).
8. Connect hose (3) to wheel port connector (2).
9. Apply pipe sealing compound to adapter (14) threads.
10. Install adapter (14) on wheel valve (7).
11. Connect hose (15) to adapter (14) on wheel valve (7).
12. Connect hose (15) to valve stem (1).
13. Repeat steps 3 through 12 for other wheel valve.
14. Start vehicle and check operation of CTIS (TM 9-2320-302-10).

END OF WORK PACKAGE

CTIS WHEEL VALVE REPAIR (M916A3, M917A2) 0215 00

THIS TASK COVERS

Disassembly, Assembly

INITIAL SETUP

Tools and Special Tools

Tool kit, general mechanic's (Item 50, WP 0306 00)

Materials/Parts

Kit, repair (P/N 673856)

References

TM 9-2320-302-10

Equipment Condition

CTIS front wheel valve removed (WP 0213 00)

CTIS rear wheel valve removed (WP 0214 00)

DISASSEMBLY

NOTE

Wheel valve cover is under spring tension. Apply hand pressure to cover when removing screws.

1. Remove four screws (1), cover (2), and spring (3) from valve body (8).
2. Remove backing plate (4), diaphragm (5) and seat (6) from valve body (8).
3. Remove preformed packing (7) from seat (6). Discard preformed packing.
4. Remove air filter (9) from valve body (8). Discard filter.
5. Remove valve stem (10) from valve body (8).

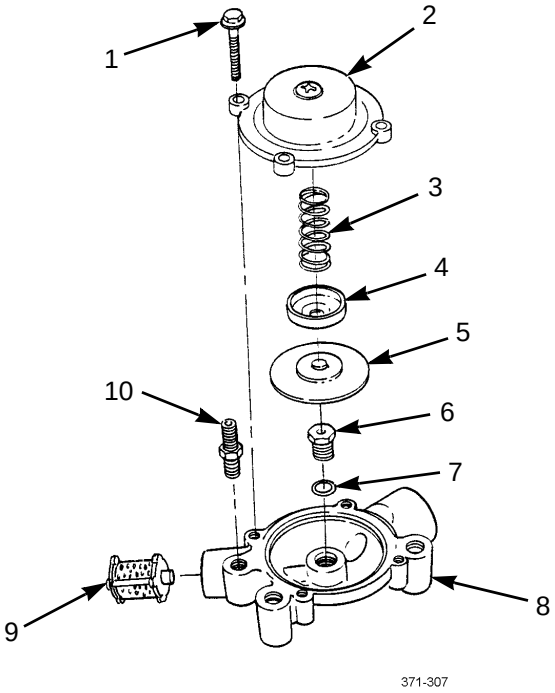

ASSEMBLY

1. Install valve stem (10) and torque to 40 lb-in (5 Nm).
2. Install new air filter (9) with open end out in valve body (8).
3. Install new preformed packing (7) to seat (6) and install seat. Torque seat to 96-120 lb-in (11-14 Nm).
4. Install diaphragm (5) with beveled edge down to valve body (8).
5. Install backing plate (4) with flange up on diaphragm (5).
6. Position spring (3) on center of backing plate (4).
7. Position cover (2) on spring (3) and press cover to valve body (8), compressing spring.
8. While applying hand pressure to cover (2), install four screws (1).
9. Torque screws (1) to 40 lb-in (5 Nm).

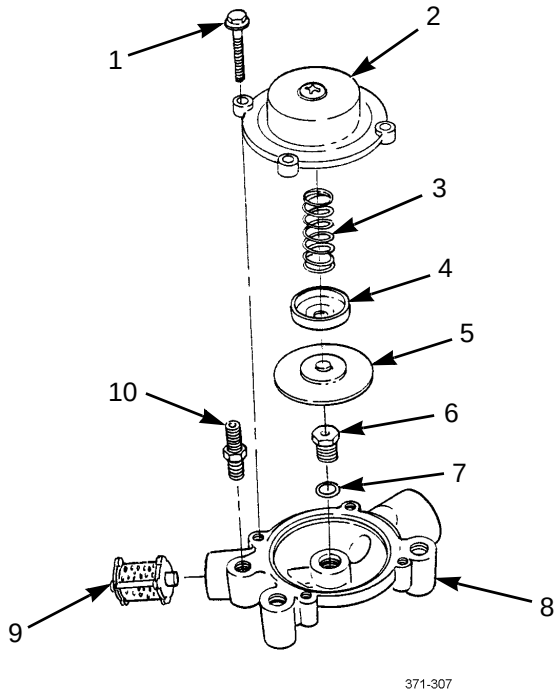

10. Install CTIS front wheel valve (WP 0213 00).
11. Install CTIS rear wheel valve (WP 0214 00).
12. Start vehicle and check operation of CTIS (TM 9-2320-302-10).

END OF WORK PACKAGE

CTIS QUICK-RELEASE VALVE MAINTENANCE (M916A3, M917A2) 0216 00

THIS WORK PACKAGE COVERS

Removal, Disassembly, Assembly, Installation

INITIAL SETUP

Tools and Special Tools

Tool kit, general mechanic's (Item 50, WP 0306 00)

Goggles, industrial (Item 14, WP 0306 00)

Materials/Parts

Kit, repair (P/N 599819)

References

TM 9-2320-302-10

Equipment Condition

Vehicle air system drained (TM 9-2320-302-10)

REMOVAL

WARNING

Always wear eye protection when disconnecting CTIS air lines. Residual air in air lines will be expelled even though vehicle air system is drained. Failure to follow this warning could result in eye injury.

NOTE

There is one CTIS quick release valve in front and four in rear. Replacement is similar. Front quick release valve is illustrated.

REMOVAL - CONTINUED

1. Disconnect two hoses (2) and remove tee (3) and adapter (9) from air inlet port on quick release valve (8).
2. Disconnect two hoses (1) and remove two adapters (6) from two air outlet ports on quick release valve (8).
3. Remove two bolts (4), two nuts (7), four flat washers (5), and quick release valve (8).

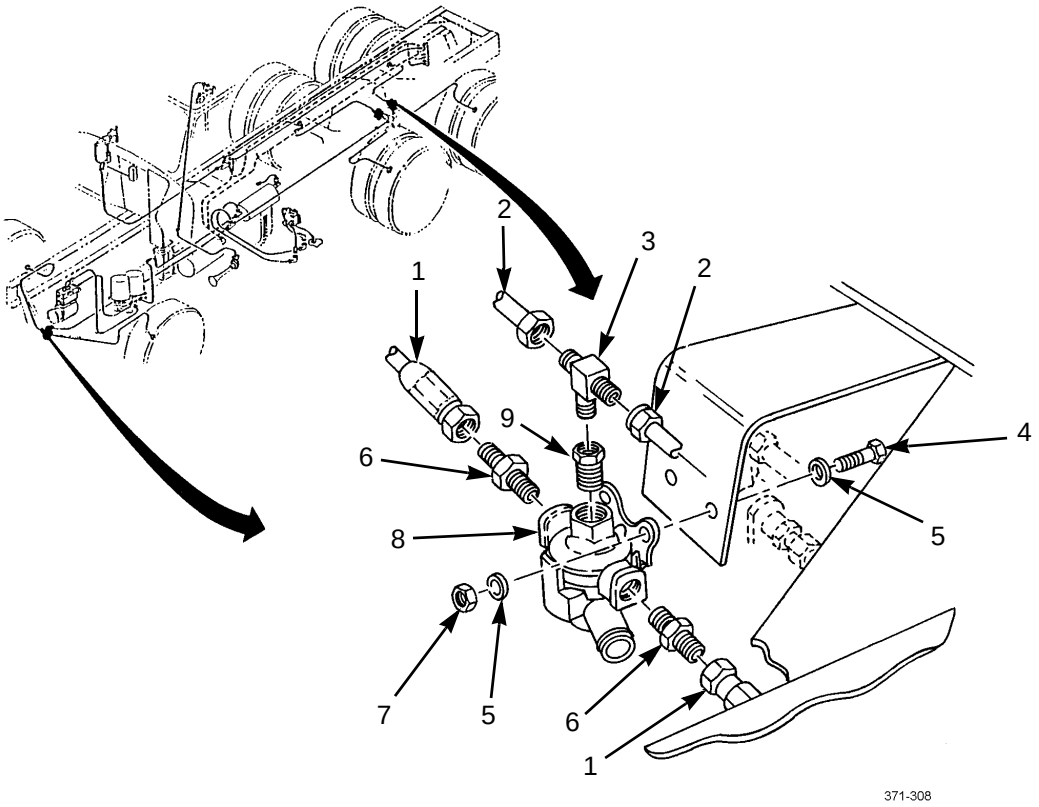

DISASSEMBLY

NOTE

- Disassembly can be performed with quick release valve installed.
- Note orientation of snorkel exhaust port prior to removal.

1. Pry three legs on snorkel adapter (10) off of seat on quick release valve (8).
2. Remove snorkel adapter (10) and preformed packing (11) from quick release valve (8). Discard preformed packing.

DISASSEMBLY - CONTINUED

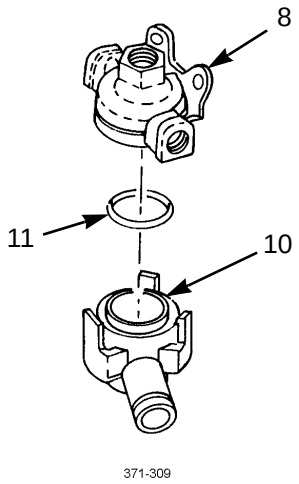

ASSEMBLY

1. Install new preformed packing (11) onto snorkel adapter (10).

NOTE

Orient snorkel exhaust port same as when removed.

2. By hand, press snorkel adapter (10) onto quick release valve (8) until legs on snorkel adapter engage seat on quick release valve.

INSTALLATION

1. With air inlet port up, secure quick release valve (8) with two bolts (4), four flatwashers (5), and two nuts (7).
2. Install two adapters (6) and connect two air hoses (1) to two air outlet ports.
3. Install adapter (9), tee (3), and connect two air hoses (2) to air inlet port.
4. Check operation of CTIS (TM 9-2320-302-10).

END OF WORK PACKAGE

CTIS AIR TUBE REPLACEMENT (M916A3, M917A2) 0217 00

THIS TASK COVERS

Removal, Installation

INITIAL SETUP

Tools and Special Tools

Tool kit, general mechanic's (Item 50, WP 0306 00)

Goggles, industrial (Item 14, WP 0306 00)

Materials/Parts

Kit, repair (P/N 599819)

References

TM 9-2320-302-10

Equipment Condition

Vehicle air system drained (TM 9-2320-302-10)

REMOVAL

WARNING

Drain all air from the wet tank before disconnecting any air lines, hoses, tubes or fittings. Always use eye-protection. Failure to observe this warning may result in serious injury.

NOTE

- Procedure is the same for all air tubes.
- Tag all air tubes and fittings prior to removal to aid during installation.
- Remove cable ties as necessary to remove air tubes.
- When replacing air tubes, remove tube from vehicle and cut new tube 1/4-1/2 in. longer than tube being replaced.

REMOVAL - CONTINUED

1. Remove nut (4) from fitting (1).
2. Remove air tube (5) from fitting (1).
3. Remove insert (2), ferrule (3), and nut (4) from air tube (5).

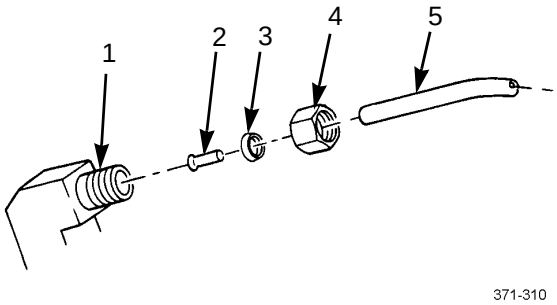

INSTALLATION

NOTE

Procedure is the same for all air tubes.

1. Install nut (4), ferrule (3), and insert (2) on air tube (5).

CAUTION

Route air tubes so that tube does not bend to radius smaller than allowed in Nylon Tube Bend Radius Table. If bent smaller than allowed, tube may kink causing loss of air pressure.

NOTE

Apply a thin coat of thread sealing compound on male threads of fittings.

2. Install nut (4) on fitting (1).

Nylon Tube Bend Radius Table

Outside Diameter		Minimum Bend Radius	
in.	(mm)	in.	(mm)
0.25	(6.40)	1.0	(25.0)
0.38	(9.50)	1.5	(38.0)
0.50	(13.00)	2.0	(51.0)
0.63	(17.00)	2.5	(64.00)
0.75	(19.00)	3.0	(76.0)

3. Check operation of CTIS (TM 9-2320-302-10).

END OF WORK PACKAGE

STEERING WHEEL REPLACEMENT 0218 00

THIS WORK PACKAGE COVERS

Removal, Installation

INITIAL SETUP

Tools and Special Tools

Tool kit, general mechanic's (Item 50, WP 0306 00)

Puller kit, universal (Item 37, WP 0306 00)

Wrench, torque, 15-75 lb-ft (Item 57, WP 0306 00)

Materials/Parts

Nut, lock (P/N 20-26124)

Equipment Condition

Front wheels straight

REMOVAL

NOTE

Avoid rotating steering wheel during removal.

1. Pry cover (1) from horn button (7) and remove three springs (8).
2. Remove horn button (7) from steering wheel (5) and remove wires (2) and (3) from horn button.
3. Remove locknut (6) from steering column (4). Discard locknut.

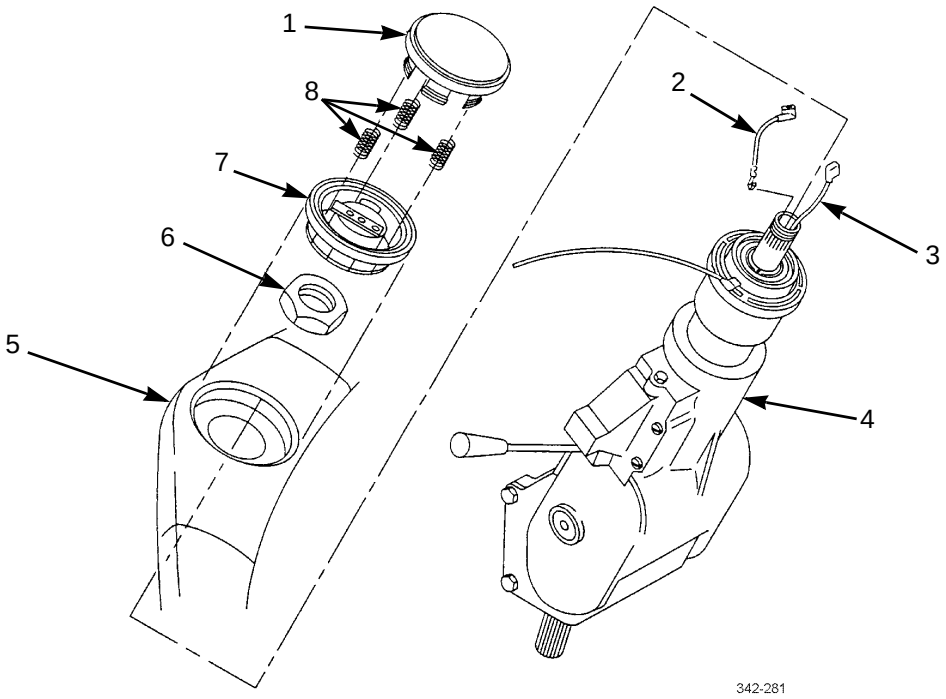

REMOVAL - CONTINUED

CAUTION

Use caution when removing steering wheel to prevent damage to wires.

4. Using universal puller kit, remove steering wheel (5) from steering column (4).

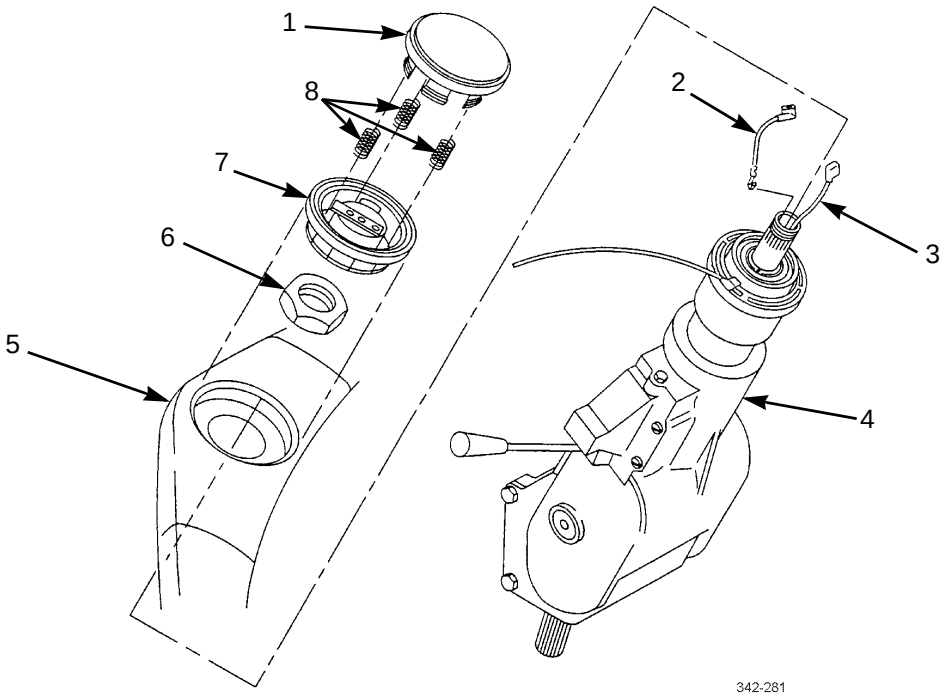

INSTALLATION

1. Align steering wheel (5) with steering column (4) and install new locknut (6). Tighten locknut to 60 lb-ft (81 Nm).
2. Install wires (2) and (3) on horn button (7). Press horn button on steering wheel (5).
3. Install three springs (8) and cover (1) on horn button (7).

END OF WORK PACKAGE

UNIVERSAL SHAFT MAINTENANCE 0219 00

THIS WORK PACKAGE COVERS

Removal, Disassembly, Assembly, Installation

INITIAL SETUP

Tools and Special Tools

Tool kit, general mechanic's (Item 50, WP 0306 00)

Drill, electric, portable (Item 9, WP 0306 00)

Drill set, twist (Item 10, WP 0306 00)

Riveter, blind, hand (Item 38, WP 0306 00)

Materials/Parts

Nut, lock (P/N 115307A)

Materials/Parts - Continued

Nut, lock (P/N 2C447622)

Kit (P/N 5-170X) (2)

Rivet, blind (P/N 1641-0631) (10)

Equipment Condition

Steering column cover removed (WP 0266 00)

REMOVAL

1. Remove locknut (9) and screw (11) from upper shaft (7). Discard locknut.
2. Disconnect upper shaft (7) from steering column (8).
3. Support lower shaft (4) and remove grease fitting (6) from upper shaft (7).
4. Remove bushing (10) from boot (5).
5. Separate upper shaft (7) from lower shaft (4) and remove upper shaft from boot (5).
6. Remove locknut (3), screw (2), and lower shaft (4) from steering gear (1). Discard locknut.
7. If damaged, remove ten rivets (13) and boot (5) from firewall (12). Discard rivets.

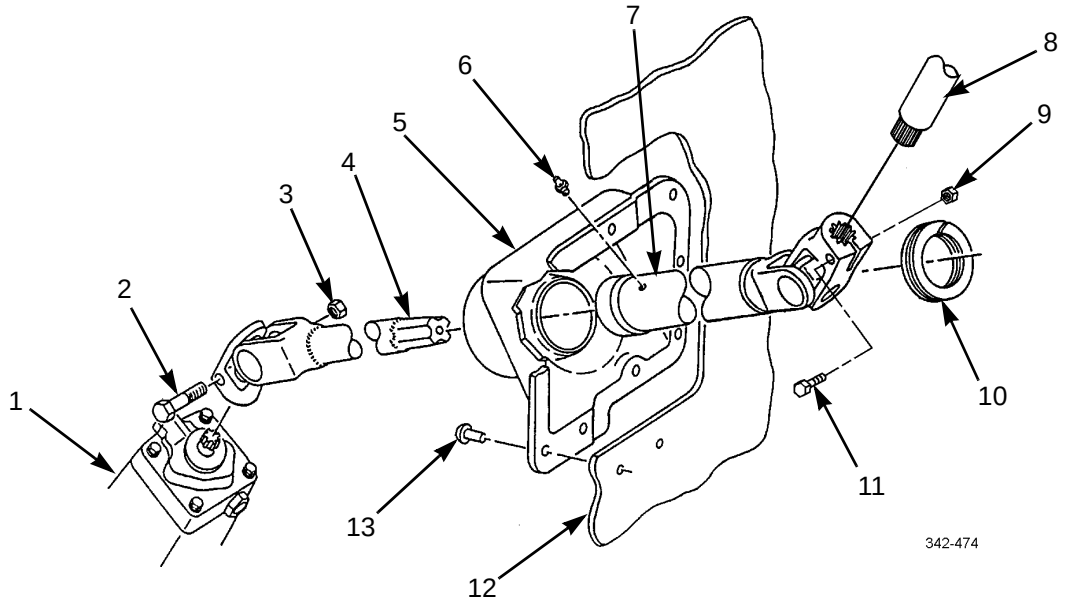

DISASSEMBLY

1. Remove four snap rings (16), bearings (14), lower yoke (18), and cross (17) from lower shaft (4).
2. Repeat step 1 for upper yoke (15).

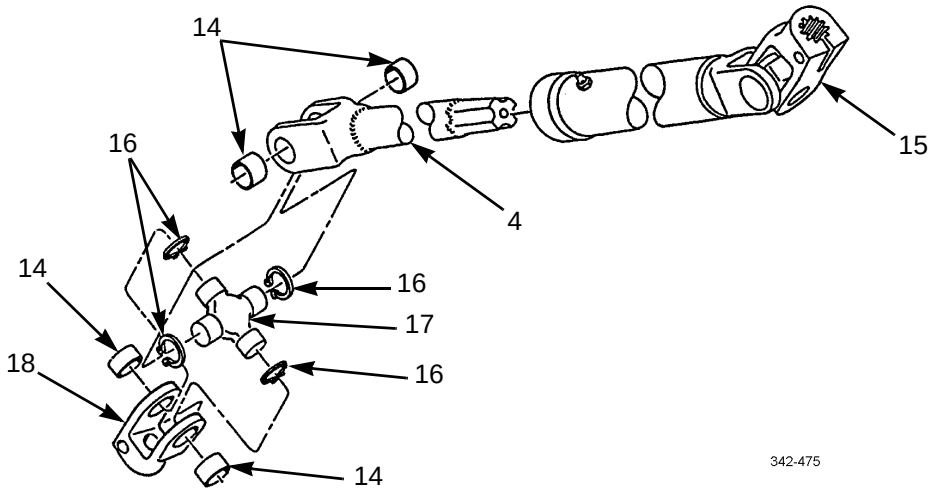

ASSEMBLY

1. Install cross (17), lower yoke (18), four bearings (14), and snap rings (16) on lower shaft (4).
2. Repeat step 1 for upper yoke (15).

INSTALLATION

1. If removed, install boot (5) on firewall (12) with ten new rivets (13).
2. Install splined end of lower shaft (4) through boot (5).
3. Install lower shaft (4) on steering gear (1).
4. Support lower shaft (4) on steering gear (1) and install screw (2) and new locknut (3).
5. Install upper shaft (7) through boot (5) and onto lower shaft (4).
6. Install bushing (10) on boot (5).
7. Install grease fitting (6) in upper shaft (7).
8. Connect upper shaft (7) to steering column (8) and install screw (11) and new locknut (9).
9. Install steering column cover (WP 0266 00).

INSTALLATION - CONTINUED

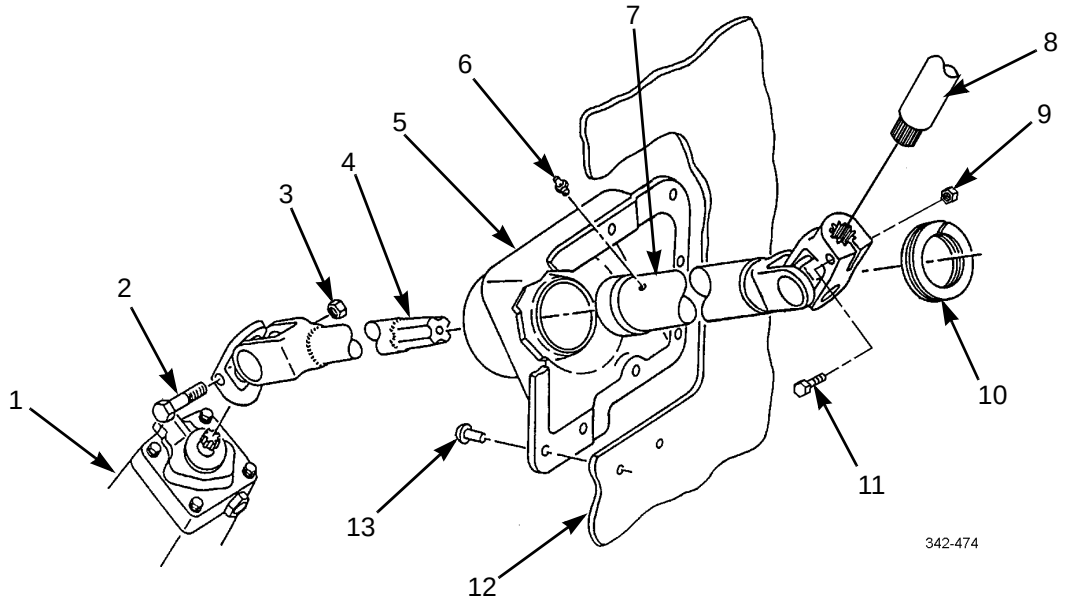

END OF WORK PACKAGE

PITMAN ARM AND DRAG LINK MAINTENANCE 0220 00

THIS WORK PACKAGE COVERS

Drag Link Removal, Pitman Arm Removal, Drag Link Installation, Pitman Arm Installation

INITIAL SETUP

Tools and Special Tools

Tool kit, general mechanic's (Item 50, WP 0306 00)

Wrench, torque, 50-250 lb-ft (Item 58, WP 0306 00)

Materials/Parts

Nut, lock (P/N M45913/2-12FG5C)

Pin, cotter (P/N 23-00800-412) (2)

DRAG LINK REMOVAL

1. Remove two cotter pins (4) and castle nuts (5) from drag link (7). Remove drag link from vehicle. Discard cotter pins.
2. Remove two grease fittings (6) from drag link (7).

PITMAN ARM REMOVAL

Remove locknut (8), washer (9), screw (1), and pitman arm (2) from steering gear (3). Discard locknut.

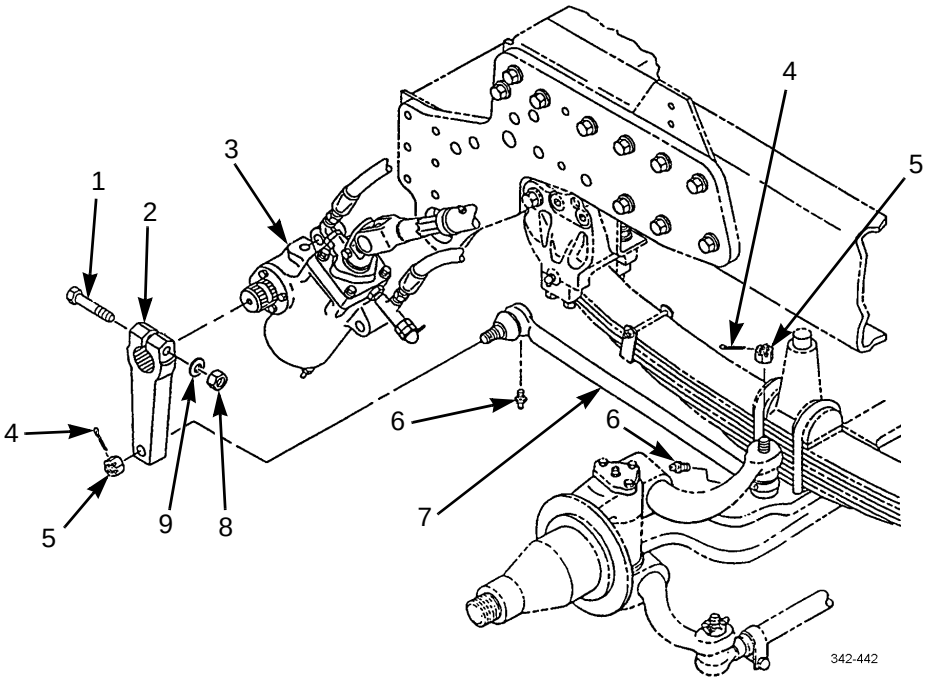

DRAG LINK INSTALLATION

1. Install two grease fittings (6) in drag link (7).

NOTE

Castle nuts are tightened to 160-215 lb-ft (217-292 Nm). Castle nuts may be tightened further to allow for cotter pin insertion. DO NOT exceed 300 lb-ft (407 Nm).

2. Install drag link (7) on vehicle with one castle nut (5) and one new cotter pin (4).

PITMAN ARM INSTALLATION

1. Install pitman arm (2) on steering gear (3) with screw (1), washer (9), and new locknut (8). Tighten locknut to 150-220 lb-ft (203-298 Nm).
2. Connect pitman arm (2) to drag link (7) and secure with castle nut (5) and new cotter pin (4).

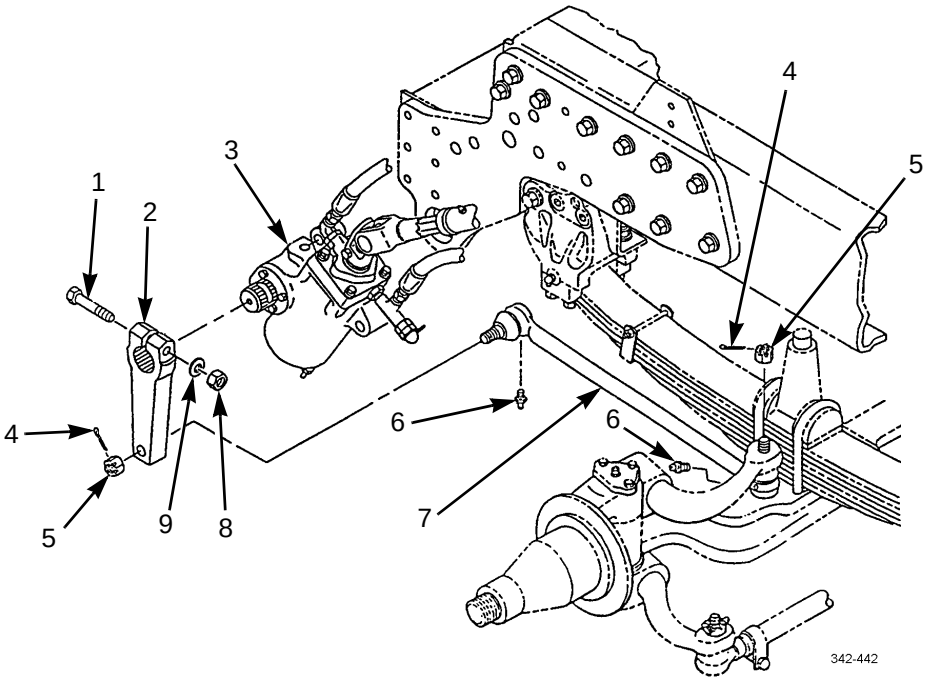

END OF WORK PACKAGE

POWER STEERING RESERVOIR AND HOSE MAINTENANCE 0221 00

THIS WORK PACKAGE COVERS

Removal, Disassembly, Assembly, Installation

INITIAL SETUP

Tools and Special Tools

Tool kit, general mechanic's (Item 50, WP 0306 00)

Pan, drain (Item 29, WP 0306 00)

Materials/Parts

Oil, lubricating (Item 22, WP 0305 00)

O-ring (P/N 3-908N552-90)

Materials/Parts - Continued

Rags, wiping (Item 31, WP 0305 00)

Filter element (P/N 83213D)

Gasket (P/N Q-59278)

Nut, lock (P/N M45913/1-8CG5C) (2)

REMOVAL

WARNING

Spilled hydraulic fluid is very slippery. Wipe up any spilled fluid immediately. Failure to do so could result in serious injury to personnel.

1. Remove plug (3) and drain power steering reservoir (7).
2. Remove two clamps (5), hose (6), and elbow (4) from power steering reservoir (7).
3. Remove two hoses (2), three elbow fittings (1), protective cap (12), quick disconnect fitting (11), o-ring (13), adapter fitting (14), and tee (15).
4. Remove two screws (9), four washers (8), two locknuts (10), and power steering reservoir (7). Discard locknuts.

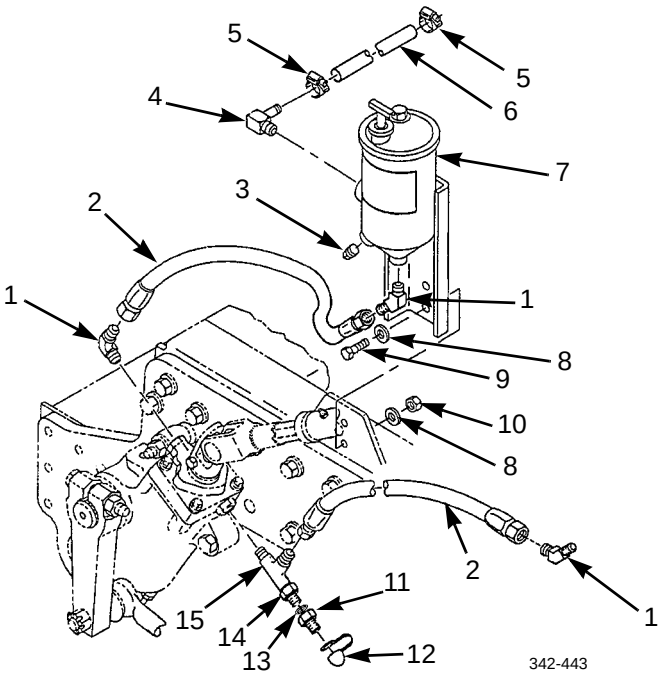

DISASSEMBLY

1. Remove dipstick (23), thumb screw (16), washer (17), gasket (21), and cover assembly (22). Discard gasket.
2. Remove spring (20), washer (18), and filter element (19) from power steering reservoir (7). Discard filter element.

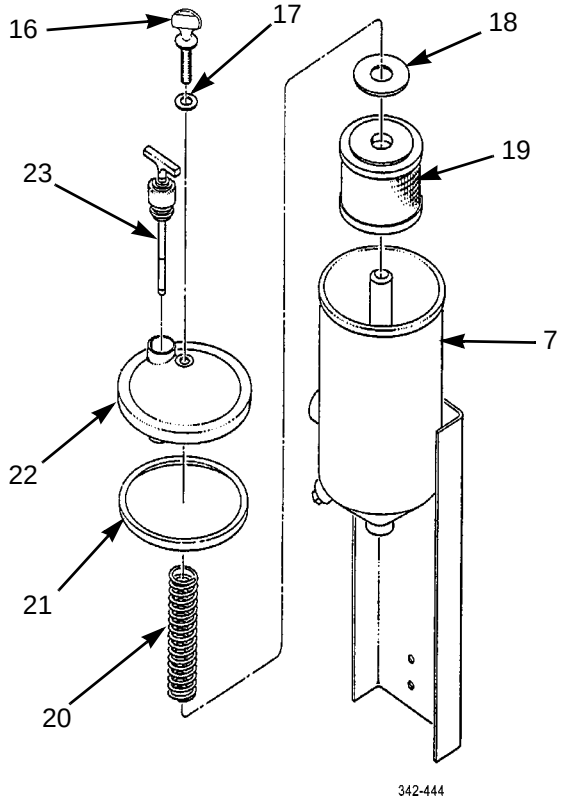

ASSEMBLY

1. Install new filter element (19), washer (18), and spring (20).
2. Install new gasket (21), cover assembly (22), washer (17), thumb screw (16), and dipstick (23) in power steering reservoir (7).

INSTALLATION

1. Position power steering reservoir (7) and secure with two screws (9), four washers (8), and two new locknuts (10).
2. Install three elbow fittings (1), tee (15), adapter fitting (14), o-ring (13), quick disconnect fitting (11), protective cap (12), and two hoses (2).
3. Install elbow (4) and connect hose (6) using two clamps (5).
4. Install drain plug (3) in power steering reservoir (7).
5. Fill power steering reservoir (7) with lubricating oil in accordance with Unit PMCS (WP 0023 00). Check system for leaks and operation.

INSTALLATION - CONTINUED

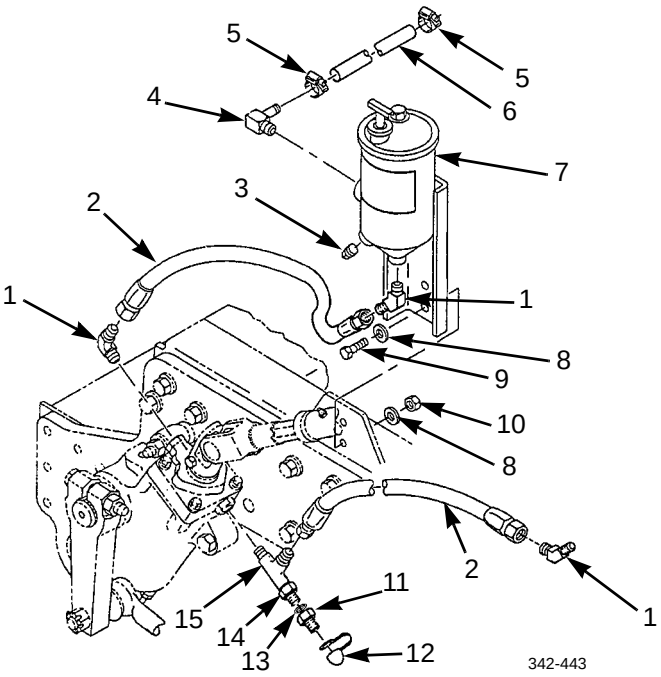

END OF WORK PACKAGE

RIGHT STEP REPLACEMENT 0222 00

THIS WORK PACKAGE COVERS

Step Assembly Removal, Front and Rear Mounting Bracket Removal, Step Disassembly, Step Assembly, Front and Rear Mounting Bracket Installation, Step Assembly Installation

INITIAL SETUP

Tools and Special Tools

Tool kit, general mechanic's (Item 50, WP 0306 00)

Drill, electric, portable (Item 9, WP 0306 00)

Drill set, twist (Item 10, WP 0306 00)

Riveter, blind, hand (Item 38, WP 0306 00)

Materials/Parts

Nut, lock (P/N M45913/1-6CG5C) (6)

Materials/Parts - Continued

Rivet, blind (P/N MA273-20000) (8)

References

WP 0138 00

Equipment Condition

CWS side sensor and bracket removed (M915A3, M916A3) (WP 0138 00)

STEP ASSEMBLY REMOVAL

Remove four locknuts (5), eight washers (2), four screws (1), four retaining strap clamps (3), and step assembly (4) from vehicle. Discard locknuts.

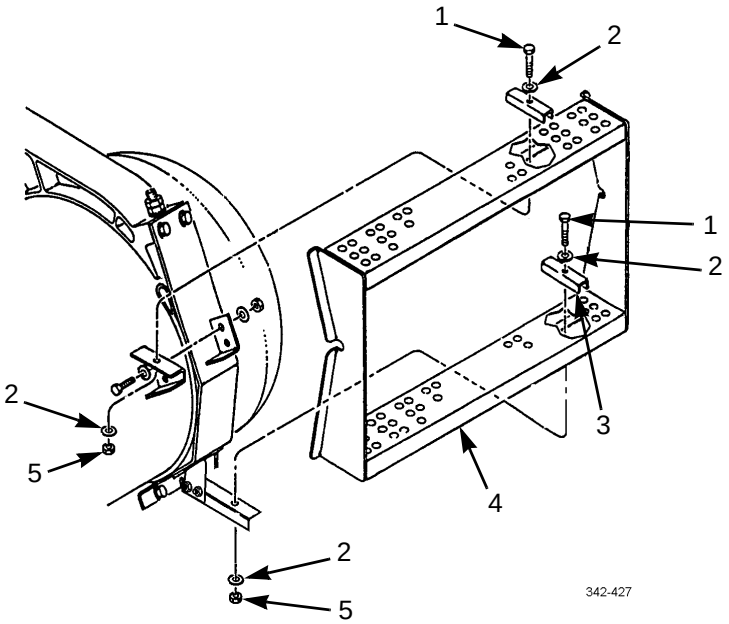

FRONT AND REAR MOUNTING BRACKET REMOVAL

NOTE

Front and rear mounting brackets are removed in the same way. Front mounting bracket is shown.

1. Remove two locknuts (8), four washers (7), two screws (9), and angle bracket (10) from mounting bracket (6). Discard locknuts.

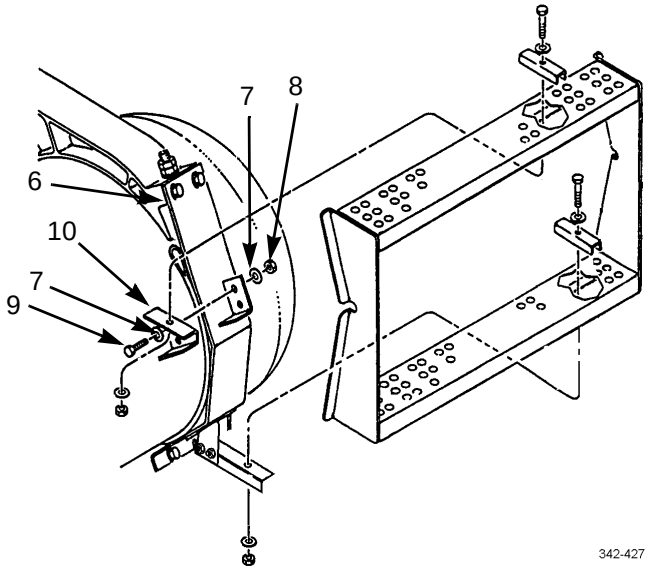

2. Remove two locknuts (14), four washers (12), two screws (11), and two angle brackets (13) from mounting bracket (6). Discard locknuts.

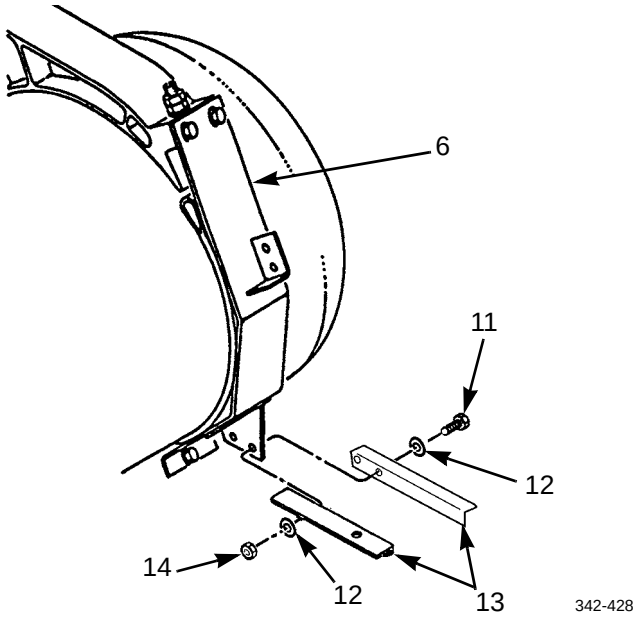

FRONT AND REAR MOUNTING BRACKET REMOVAL - CONTINUED

3. Remove locknut (17), two washers (16), and bolt (15) from mounting bracket (10). Discard locknuts.

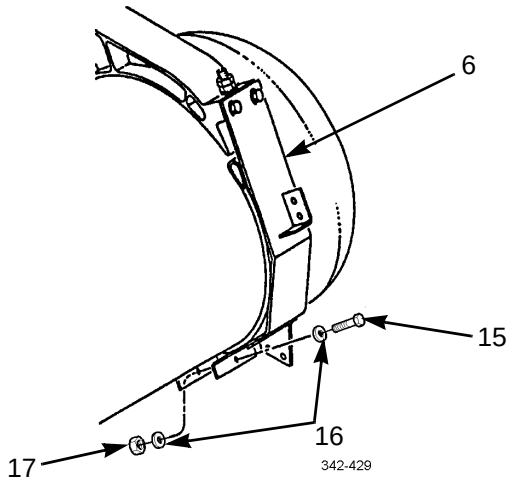

4. Remove two locknuts (20), four washers (18), two screws (19), and mounting bracket (10). Discard locknuts.

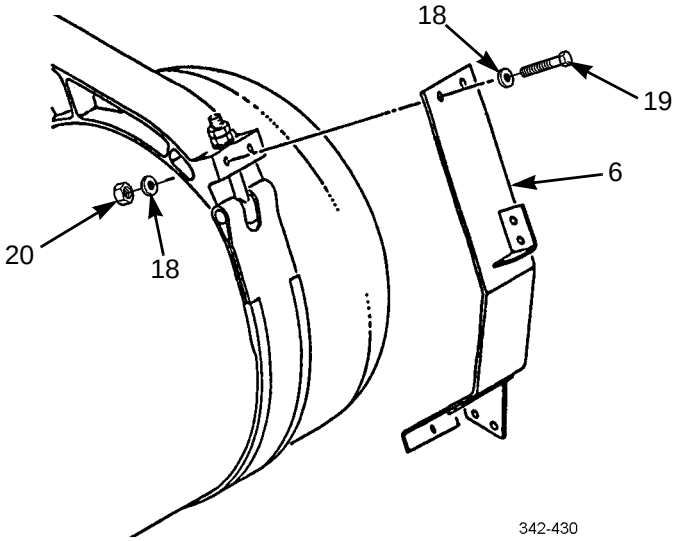

STEP DISASSEMBLY

Remove eight rivets (21) and two support brackets (22) from two steps (23). Discard rivets.

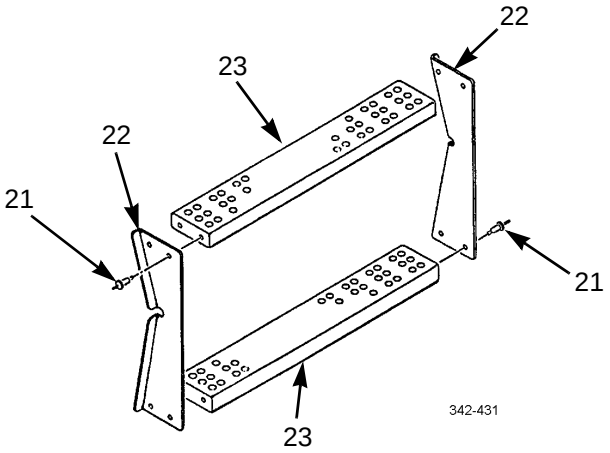

STEP ASSEMBLY

Install two support brackets (22) on two steps (23) with eight new rivets (21).

FRONT AND REAR MOUNTING BRACKET INSTALLATION

NOTE

Front and rear mounting brackets are installed in the same way. Front mounting bracket is shown.

1. Install mounting bracket (6) with two screws (19), four washers (18), and two new locknuts (20).

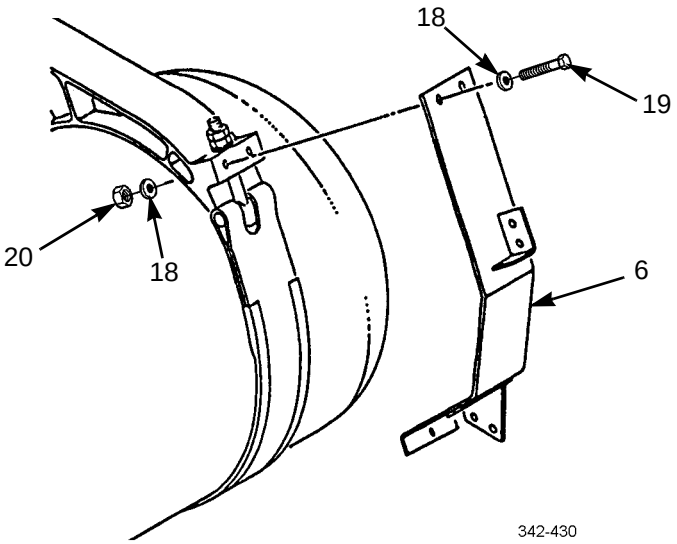

FRONT AND REAR MOUNTING BRACKET INSTALLATION - CONTINUED

2. Install bolt (15), two washers (16), and new locknut (17) on mounting bracket (6).

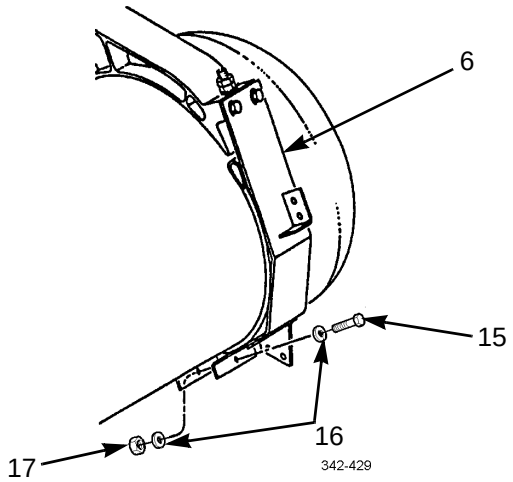

3. Install two angle brackets (13) on mounting bracket (6) with two screws (11), four washers (12), and two new locknuts (14).

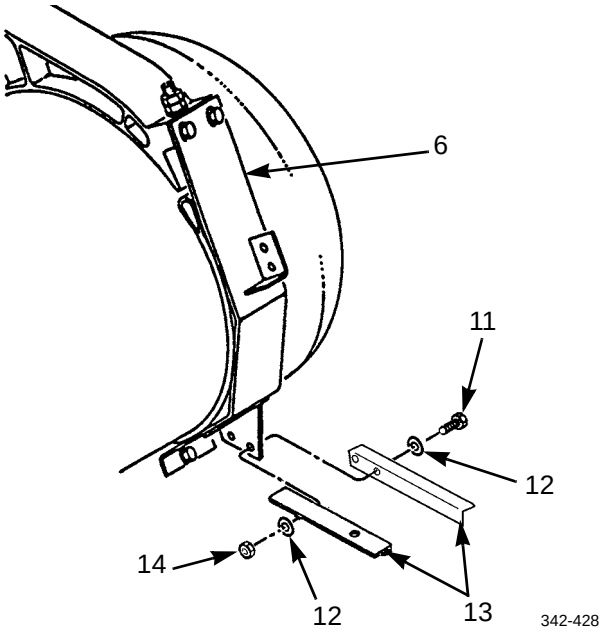

FRONT AND REAR MOUNTING BRACKET INSTALLATION - CONTINUED

4. Install angle bracket (10) on mounting bracket (6) with two screws (9), four washers (7), and two new locknuts (8).

STEP ASSEMBLY INSTALLATION

1. Install step assembly (4) on front and rear mounting brackets (6) with four screws (1), eight washers (2), four retaining strap clamps (3), and new locknuts (5).
2. Install bracket and CWS side sensor to step assembly (WP 0138 00).

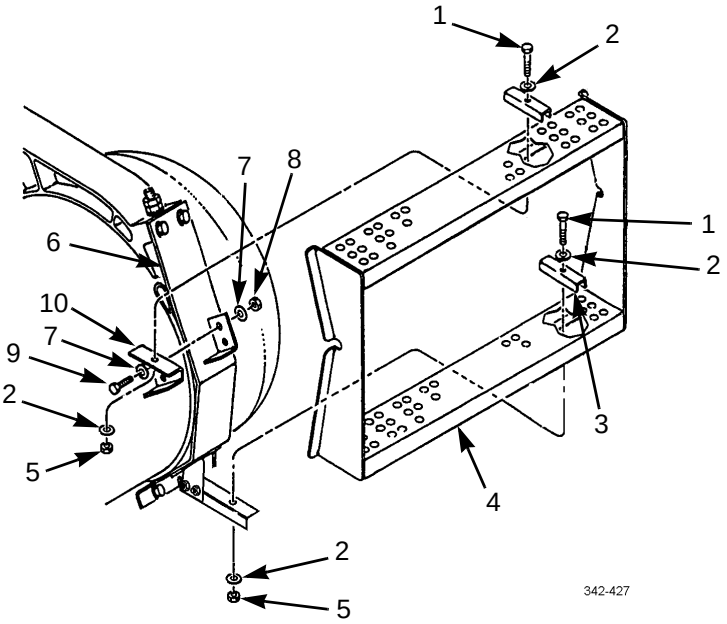

END OF WORK PACKAGE

LEFT STEP REPLACEMENT 0223 00

THIS WORK PACKAGE COVERS

Removal, Installation

INITIAL SETUP

Tools and Special Tools

Tool kit, general mechanic's (Item 50, WP 0306 00)

Materials/Parts

Nut, lock (P/NM45913/1-5CBB) (2)

Equipment Condition

Battery box cover removed (TM 9-2320-302-10)

WARNING

DO NOT allow tools to come in contact with batteries. Electrical shock may occur.

REMOVAL

1. Remove two locknuts (6), four washers (7), two bolts (8), two clamps (9), and step (1) from brackets (5). Discard locknuts.
2. Remove four nuts (2), eight washers (3), four bolts (4), and brackets (5).

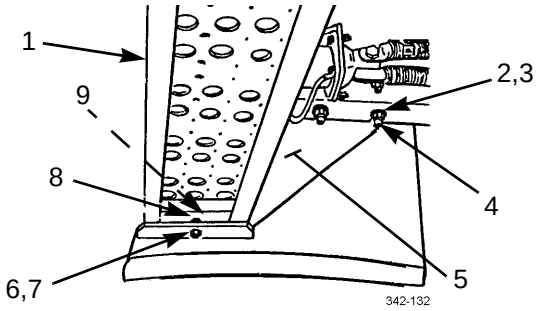

INSTALLATION

1. Install brackets (5) with eight washers (3), four bolts (4), and four nuts (2).
2. Install step (1) on brackets (5) with two clamps (9), two bolts (8), four washers (7), and two new locknuts (6).
3. Install battery box cover (TM 9-2320-302-10).

END OF WORK PACKAGE

LEFT SIDE PLATFORM REPLACEMENT (M915A3, M916A3) 0224 00

THIS WORK PACKAGE COVERS

Removal, Installation

INITIAL SETUP

Tools and Special Tools

Tool kit, general mechanic's (Item 50, WP 0306 00)

Materials/Parts

Nut, lock (P/N M45913/1-10CG5C) (4)

Equipment Condition

Primary II air tank removed (WP 0184 00)

REMOVAL

Remove four locknuts (1), washers (2), screws (3), washers (4), and left side platform (5) from vehicle. Discard locknuts.

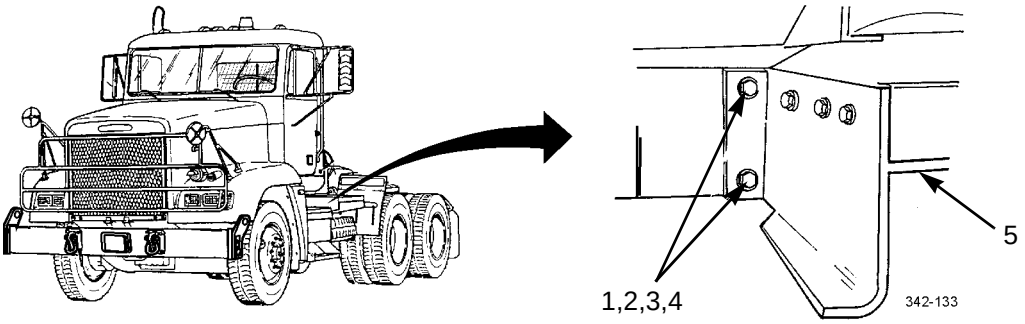

INSTALLATION

1. Install left side platform (5) on vehicle with four washers (4), screws (3), washers (2), and new locknuts (1).
2. Install primary II air tank (WP 0184 00).

END OF WORK PACKAGE

RIGHT REAR STEP REPLACEMENT (M915A3, M916A3) 0225 00

THIS WORK PACKAGE COVERS

Removal, Installation

INITIAL SETUP

Tools and Special Tools

Tool kit, general mechanic's (Item 50, WP 0306 00)

Materials/Parts

Nut, lock (P/N M45913/1-5CBB) (2)

Nut, lock (P/N M45913/1-8CG5C) (4)

REMOVAL

1. Remove two locknuts (3), washers (4), screws (5), clamp bars (2), and step (1) from two mounting brackets (6). Discard locknuts.
2. Remove four locknuts (11), washers (10), screws (8), washers (9), and two mounting brackets (6) from storage box (7). Discard locknuts.

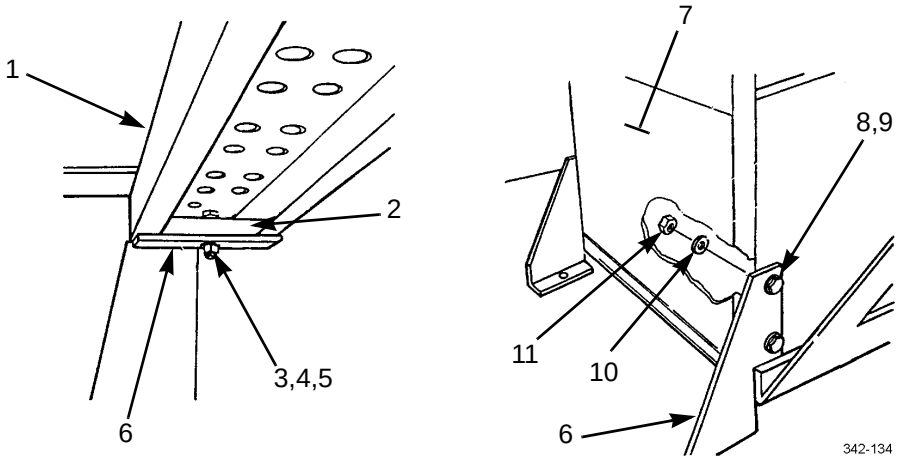

INSTALLATION

1. Install two mounting brackets (6) on storage box (7) with four washers (9), screws (8), washers (10), and new locknuts (11).
2. Install step (1) on two mounting brackets (6) with two clamp bars (2), screws (5), washers (4), and new locknuts (3).

END OF WORK PACKAGE

FRONT BUMPER REPLACEMENT 0226 00

THIS WORK PACKAGE COVERS

Removal, Installation

INITIAL SETUP

Tools and Special Tools

Tool kit, general mechanic's (Item 50, WP 0306 00)

Wrench, torque, 50-250 lb-ft (Item 58, WP 0306 00)

Materials/Parts

Nut, lock (P/N M45913/1-6CG5C) (2)

Personnel Required

Two

Equipment Condition

Collision warning system (CWS) antenna assembly removed (M915A3, M916A3) (WP 0140 00)

Engine hood assembly removed (WP 0242 00)

REMOVAL

1. Remove two locknuts (4), four washers (7), two bolts (6), and bracket (5) from front bumper (1). Discard locknuts.

WARNING

Use extreme caution when handling heavy parts. Provide adequate support and use assistance during procedure. Ensure that any lifting device used is in good condition and of suitable load capacity. Keep clear of heavy parts supported only by lifting device. Failure to follow this warning may result in death or injury to personnel.

2. Attach suitable lifting device to front bumper (1) using bumper extensions (3) as attaching points.
3. Remove lock pin (10). Unscrew threaded bolt (8) and remove hook (9) from each tow bracket (2).

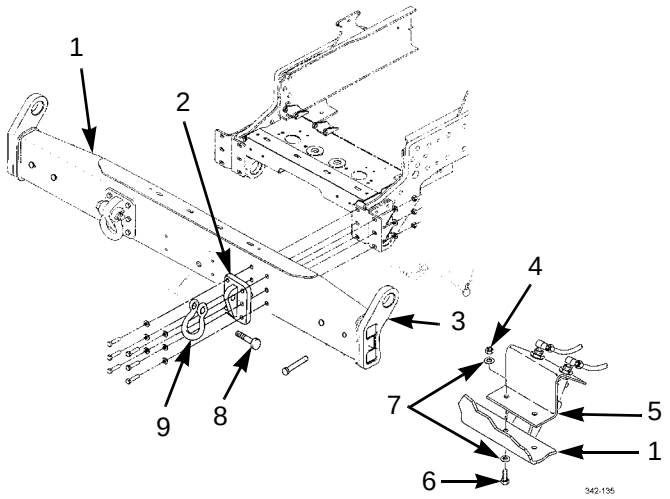

REMOVAL - CONTINUED

NOTE

Note bolt size and location to aid in installation.

4. Remove 12 nuts (12), washers (11), bolts (17), washers (18), two tow brackets (2), and front bumper (1) from vehicle.
5. Lower bumper (1) to ground and disconnect lifting device.
6. Remove four spring pins (15), straight pins (16), and two bumper extensions (3) and from front bumper (1).
7. Remove two nuts (13) and four spring pin cables (14) from front bumper (1). Discard locknuts.

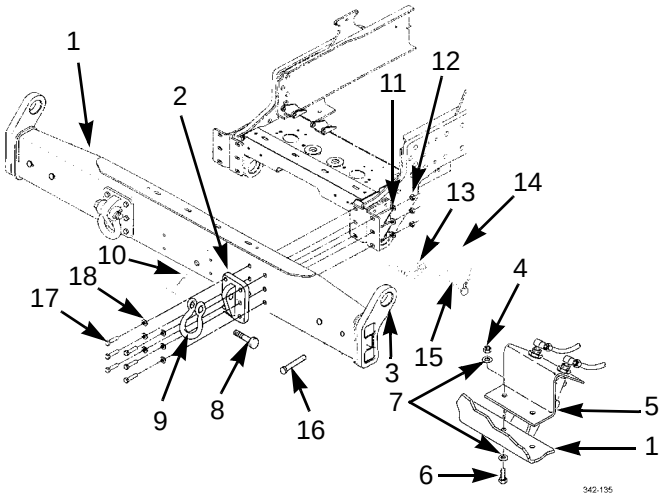

INSTALLATION

1. Install four spring pin cables (14) to front bumper (1) with two nuts (13).
2. Install two bumper extensions (3) on front bumper (1) with four straight pins (16), and spring pins (15).

WARNING

Use extreme caution when handling heavy parts. Provide adequate support and use assistance during procedure. Ensure that any lifting device used is in good condition and of suitable load capacity. Keep clear of heavy parts supported only by lifting device. Failure to follow this warning may result in death or injury to personnel.

3. Attach suitable lifting device to front bumper (1) using bumper extensions (3) as attaching points.
4. Install front bumper (1) on vehicle with two tow brackets (2), 12 washers (18), bolts (17), washers (11), and nuts (12).
5. Install hook (9) on each tow bracket (2) with threaded bolt (8) and lock pin (10).
6. Install bracket (5) on front bumper (1) with four washers (7), screws (6), and new locknuts (4).

INSTALLATION - CONTINUED

7. Install collision warning system (CWS) antenna assembly (M915A3, M916A3) (WP 0140 00).
8. Install engine hood assembly (WP 0242 00).

END OF WORK PACKAGE

SPARE TIRE CARRIER REPLACEMENT (M915A3) 0227 00

THIS WORK PACKAGE COVERS

Removal, Installation

INITIAL SETUP

Tools and Special Tools

Tool kit, general mechanic's (Item 50, WP 0306 00)

Materials/Parts

Compound, sealing (Item 12, WP 0305 00)

Nut, lock (P/N M45913/1-10CG5C) (4)

Equipment Condition

Spare tire removed (TM 9-2320-302-10)

Primary II air tank removed (WP 0184 00)

Personnel Required

Two

REMOVAL

1. Remove bottom two locknuts (1), two washers (2), spacer (6), two washers (4), and two bolts (5).
2. One person support spare wheel hoist (3).
3. Remove top two locknuts (1), two washers (2), spacer (6), two washers (4), and two bolts (5).

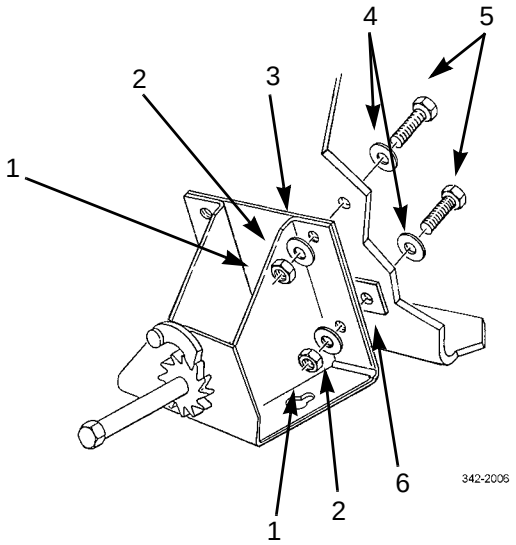

INSTALLATION

1. Install four washers (4) and four bolts (5) on frame.
2. Lightly coat both sides of two spacers (6) with sealing compound. Install spacers on four bolts (5).
3. Install spare wheel hoist (3) with four washers (4), four washers (2), and four new locknuts (1).
4. Install primary II air tank (WP 0184 00).
5. Install spare tire (TM 9-2320-302-10).

END OF WORK PACKAGE

SPARE TIRE STRAP REPLACEMENT (M916A3) 0228 00

THIS WORK PACKAGE COVERS

Removal, Installation

INITIAL SETUP

Tools and Special Tools

Tool kit, general mechanic's (Item 50, WP 0306 00)

Equipment Condition

Spare tire removed (TM 9-2320-302-10)

REMOVAL

Remove strap (2) from hoist (1).

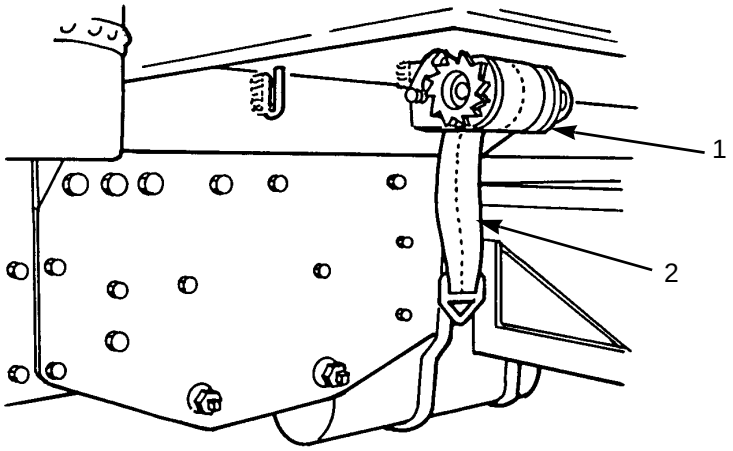

INSTALLATION

WARNING

When installing strap, make sure end of strap is on vehicle side. Failure to do so could result in injury to personnel.

1. Install strap (2) on hoist (1) by rotating spindle away from vehicle.
2. Install spare tire (TM 9-2320-302-10).

END OF WORK PACKAGE

SPARE TIRE CARRIER REPLACEMENT (M917A2) 0229 00

THIS WORK PACKAGE COVERS

Removal, Installation

INITIAL SETUP

Tools and Special Tools

Tool kit, general mechanic's (Item 50, WP 0306 00)

Materials/Parts

Nut, lock (P/N M45913/1-10CG5C) (5)

Personnel Required

Two

Equipment Condition

Spare wheel and tire assembly removed (TM 9-2320-302-10)

REMOVAL

1. If damaged, cut cable (1) from spare tire carrier (3) and bracket (2). Discard cable.

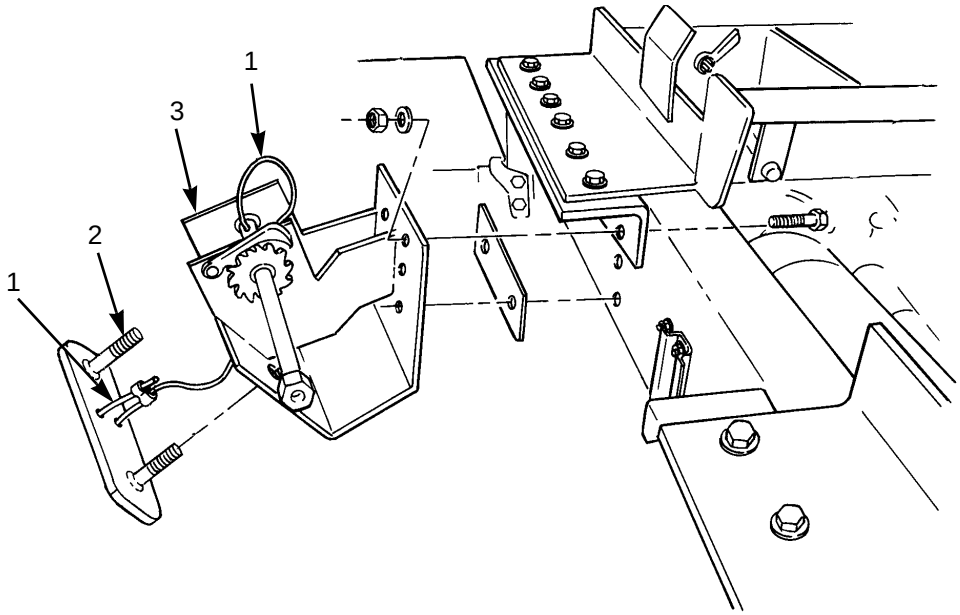

REMOVAL - CONTINUED

WARNING

Use extreme caution when handling heavy parts. Provide adequate support and use assistance during procedure. Ensure that any lifting device used is in good condition and of suitable load capacity. Keep clear of heavy parts supported only by lifting device. Failure to follow this warning may result in death or injury to personnel.

NOTE

Note position of screws for installation.

2. Remove five locknuts (4), washers (5), screws (6), spare tire carrier (3) and spacer (8) from chassis (7). Discard locknuts.

INSTALLATION

1. Install spacer (8) and spare tire carrier (3) to chassis (7) with five screws (6), washers (5) and new locknuts (4). Tighten locknuts to 200 lb-ft (271 Nm).

2. If removed, use swaging tool to install new cable (1) to spare tire carrier (3) and bracket (2) with two new sleeves (9).

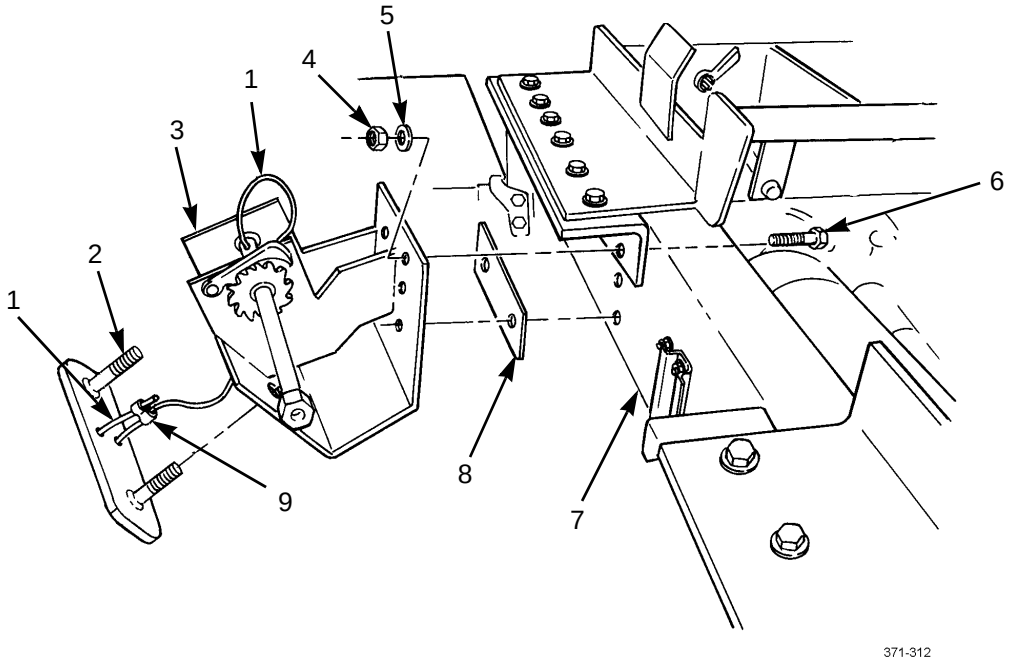

3. Install spare wheel and tire assembly (TM 9-2320-302-10).

END OF WORK PACKAGE

REAR TIE DOWN REPLACEMENT (M915A3) 0230 00

THIS WORK PACKAGE COVERS

Removal, Installation

INITIAL SETUP

Tools and Special Tools

Tool kit, general mechanic's (Item 50, WP 0306 00)

Materials/Parts

Nut, lock (P/N 23-0991-116) (6)

Nut, lock (P/N M45913/1-8CG5C) (2)

Equipment Condition

Mud flap assembly removed (WP 0254 00)

NOTE

Right- and left-rear tie downs are replaced the same way. Left-rear tie down is shown.

REMOVAL

1. Remove cotter pin (9), nut (8), pin (11), and shackle (10), from tie down (1).
2. Remove two locknuts (5), four washers (6), two screws (7), and mud flap bracket (12) from tie down (1). Discard locknuts.
3. Remove six locknuts (2), 12 washers (3), six bolts (4) and tie down (1) from rear of vehicle. Discard locknuts.

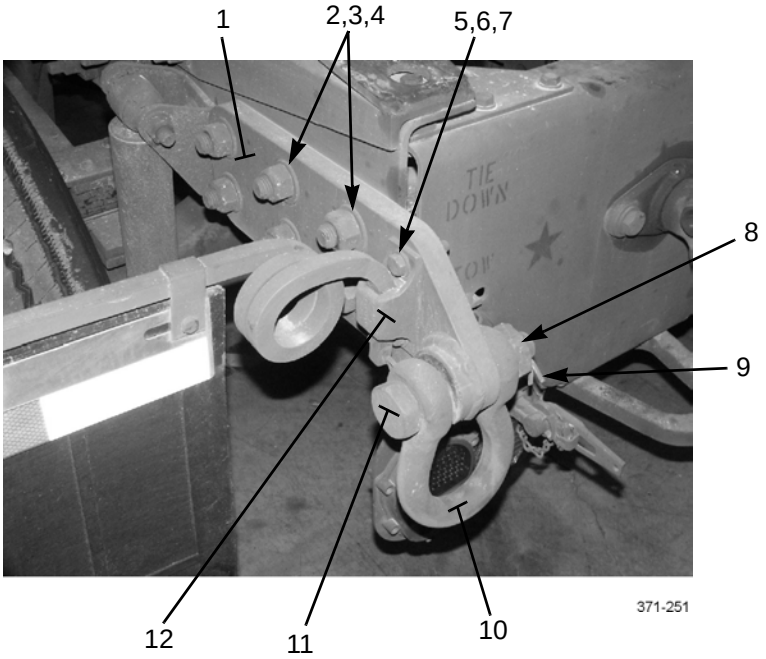

INSTALLATION

1. Install tie down (10) to rear of vehicle with six bolts (4), 12 washers (3), and six new locknuts (6).
2. Install mud flap bracket (12) to tie down (1) with two screws (7), four washers (6), and two new locknuts (5).
3. Install shackle (10) to tie down (1) with pin (11), nut (8), and cotter pin (9).

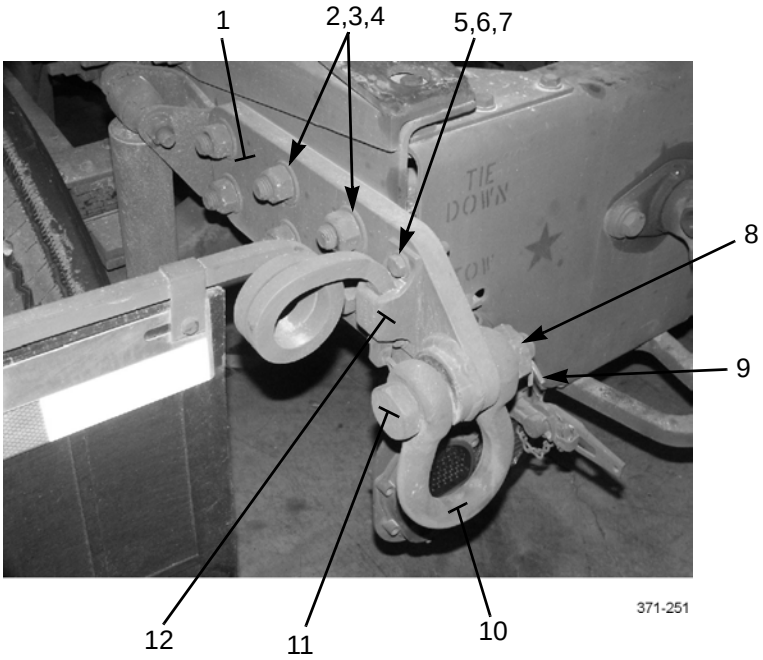

4. Install mud flap assembly (WP 0254 00).

END OF WORK PACKAGE

FIFTH WHEEL ADJUSTMENT (M915A3) 0231 00

THIS WORK PACKAGE COVERS

Adjustment

INITIAL SETUP

Tools and Special Tools

Tool kit, general mechanic's (Item 50, WP 0306 00)

Tester, kingpin lock (Item 47, WP 0306 00)

Gage, profile (Item 12, WP 0306 00)

ADJUSTMENT

1. Install kingpin lock tester (1) on fifth wheel (2).

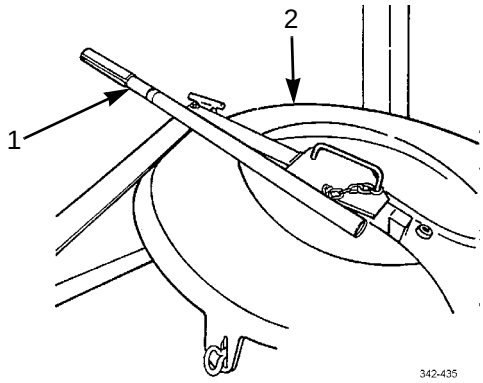

2. Close locks and insert profile gage (5).
3. Rotate rubber bushing (4) between adjustment nut (3) and casting (6).

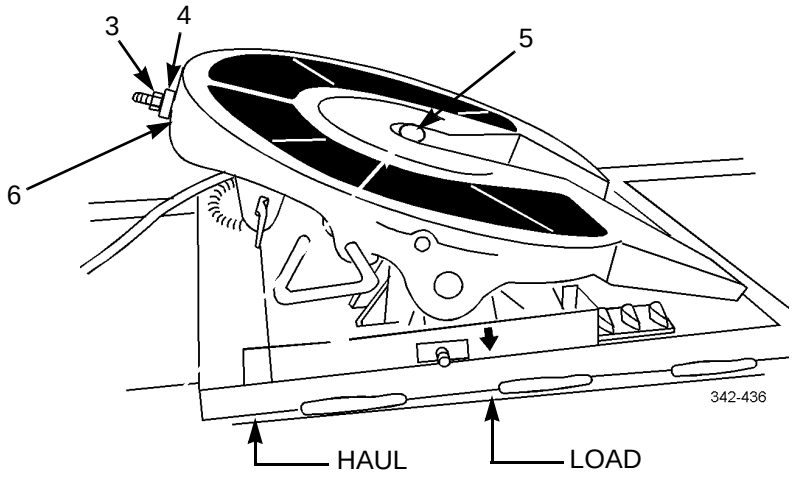

ADJUSTMENT - CONTINUED

NOTE

Bushing should be snug, but able to rotate. If bushing does not rotate or rotates too freely, perform step 4.

4. If bushing (4) is too tight, rotate nut (3) on yoke shank (7) counterclockwise until bushing is snug. If bushing is loose, rotate nut clockwise until bushing is snug, but still rotates.

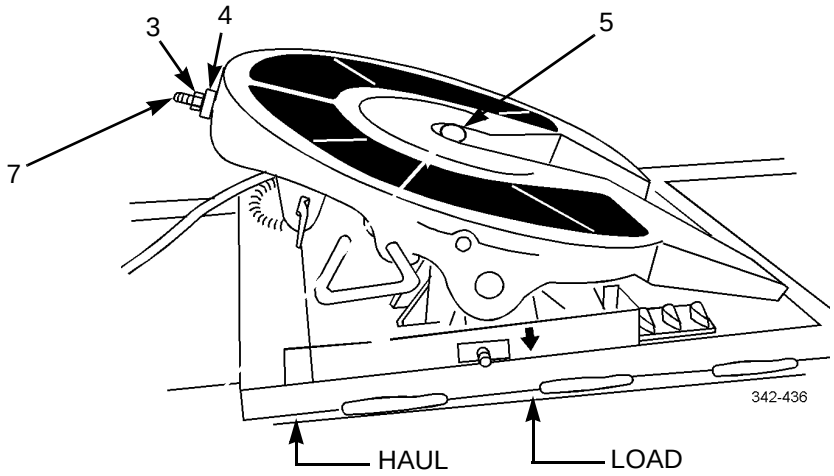

5. Verify proper adjustment by locking and unlocking fifth wheel (2) several times with lock tester (1).

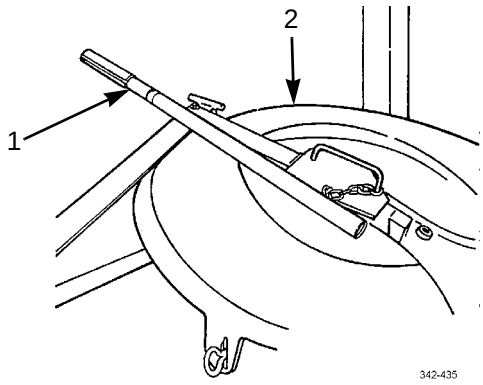

6. Remove profile gage (5) and kingpin lock tester (1).

END OF WORK PACKAGE

FIFTH WHEEL REAR TILT STOPS REPLACEMENT (M915A3) 0231 01

THIS WORK PACKAGE COVERS

Removal, Installation

INITIAL SETUP

Maintenance Level

Unit

Tools and Special Tools

Tool kit, general mechanic's (Item 50, WP 0306)

NOTE

If equipped, fifth wheel rear tilt stops must be removed prior to loading a tractor/trailer combination onto a Roll-on/Roll-off (RO/RO) ship.

REMOVAL

1. Remove clip pin (1) and tilt stop (2) from back plate (4) on slide bracket (3).
2. Repeat step 1 for opposite side.

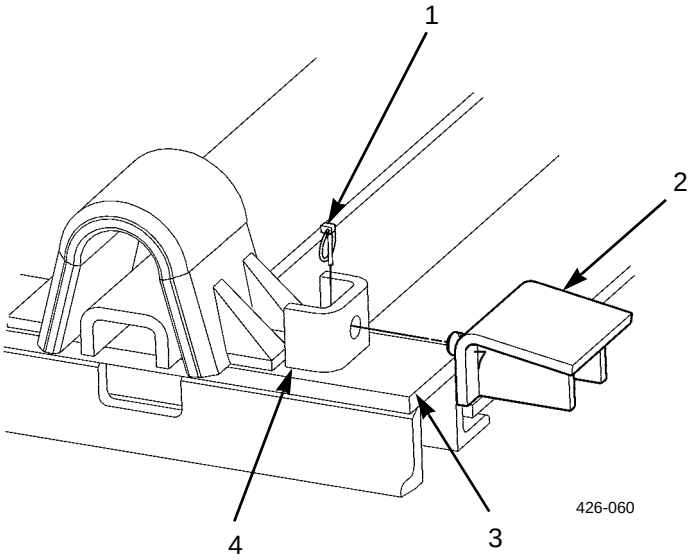

INSTALLATION

1. Position tilt stop (2) on back plate (4) and install clip pin (1).
2. Repeat step 1 for opposite side.

END OF WORK PACKAGE

FIFTH WHEEL ADJUSTMENT (M916A3) 0232 00

THIS WORK PACKAGE COVERS

Adjustment

INITIAL SETUP

Tools and Special Tools

Tool kit, general mechanic's (Item 50, WP 0306 00)

Tester, kingpin lock (Item 48, WP 0306 00)

Personnel Required

Two

ADJUSTMENT

1. Close locks (2) using lock tester (1).
2. Tighten socket head adjustment screw (3) by turning to right.
3. Turn socket head adjustment screw (3) 1-1/2 turns to left.
4. Verify adjustment by locking and unlocking several times using lock tester (1).

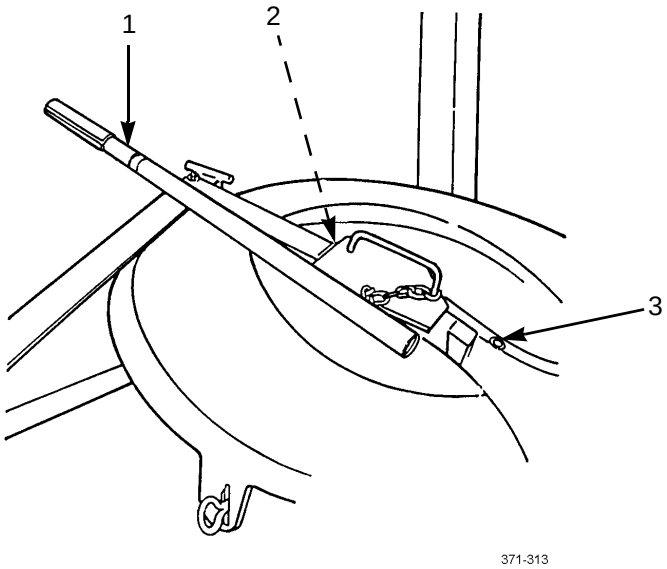

END OF WORK PACKAGE

PINTLE HOOK MAINTENANCE 0233 00

THIS WORK PACKAGE COVERS

Removal, Disassembly, Assembly, Installation

INITIAL SETUP

Tools and Special Tools

Tool kit, general mechanic's (Item 50, WP 0306 00)

Wrench, torque (Item 57, WP 0306 00)

Materials/Parts

Grease, GAA (Item 18, WP 0305 00)

Materials/Parts - Continued

Nut, lock (P/N XB-769) (2)

Pin, cotter (P/N XB-119-1)

Pin, cotter (P/N XB-773)

References

WP 0023 00

REMOVAL

1. Remove cotter pin (9), castle nut (2), washer (3), and pintle hook (1) from vehicle. Discard cotter pin.
2. Remove two locknuts (10), washers (7), and inner bracket (8) from vehicle. Discard locknuts.
3. Remove two screws (6), washers (7), and outer bracket (5) from vehicle.
4. Remove two lubrication fittings (4) from inner and outer brackets (5 and 8).

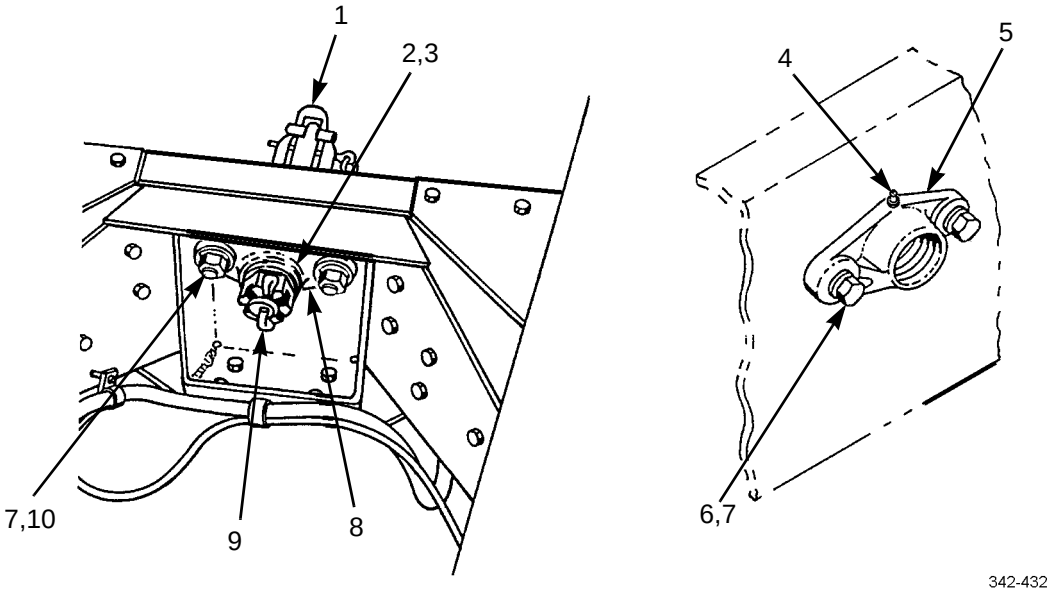

DISASSEMBLY

1. Remove cotter pin (12), castle nut (13), fluid passage bolt (11), and latch (14) from pintle hook (1). Discard cotter pin.
2. Remove two lubrication fittings (15) from latch (14).
3. Remove screw and chain assembly (16) from pintle hook (1).

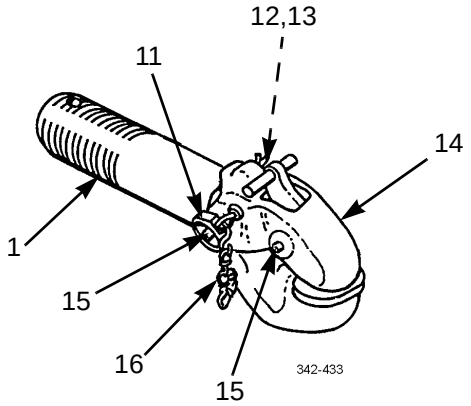

ASSEMBLY

1. Install latch (14) on pintle hook (1) with fluid passage bolt (11), castle nut (13), and new cotter pin (12).
2. Install two lubrication fittings (15) on latch (14).
3. Install screw and chain assembly (16) on pintle hook (1).

INSTALLATION

1. Install two lubrication fittings (4) on inner and outer brackets (5 and 8).
2. Install outer bracket (5) on vehicle with two washers (7) and screws (6).
3. Install inner bracket (8) on vehicle with two washers (7) and new locknuts (10).
4. Install pintle hook (1) on vehicle with washer (3) and castle nut (2).
5. Torque castle nut (2) to 40 - 60 ft-lb then back off enough to insert cotter pin (9).
6. Install new cotter pin (9) through castle nut (2).
7. Lubricate pintle hook (4) with GAA grease in accordance with Unit PMCS (WP 0023 00).

INSTALLATION - CONTINUED

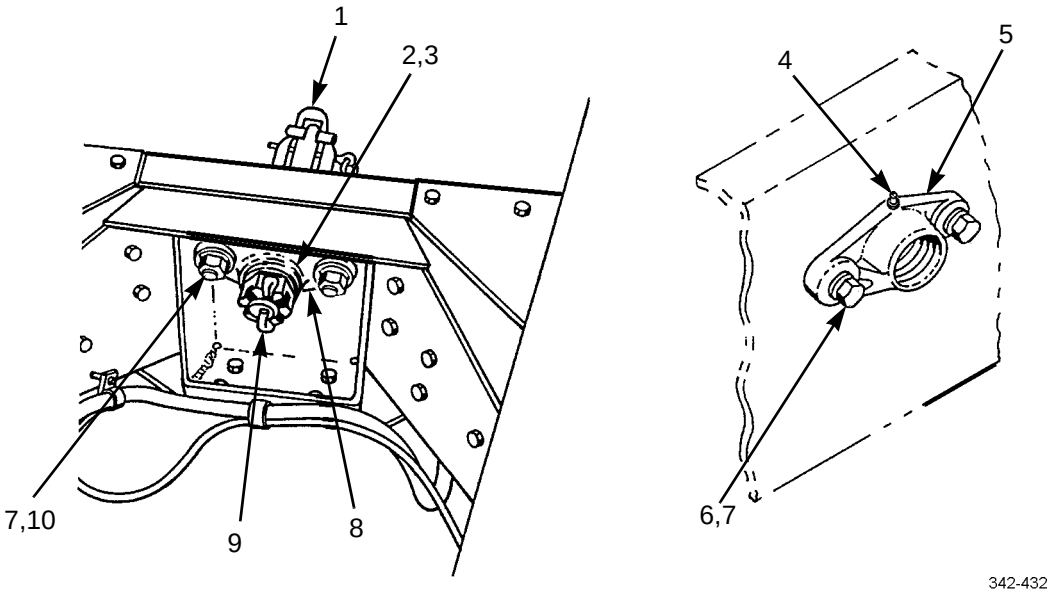

END OF WORK PACKAGE

TOWING BRACKET REPLACEMENT (M915A3) 0234 00

THIS WORK PACKAGE COVERS

Removal, Installation

INITIAL SETUP

Tools and Special Tools

Tool kit, general mechanic's (Item 50, WP 0306 00)

Material/Parts

Nut, lock (P/N M45913/1-8CG5C) (8)

REMOVAL

Remove eight locknuts (1), washers (2), four bolts (3), and towing bracket (4) from vehicle frame. Discard locknuts.

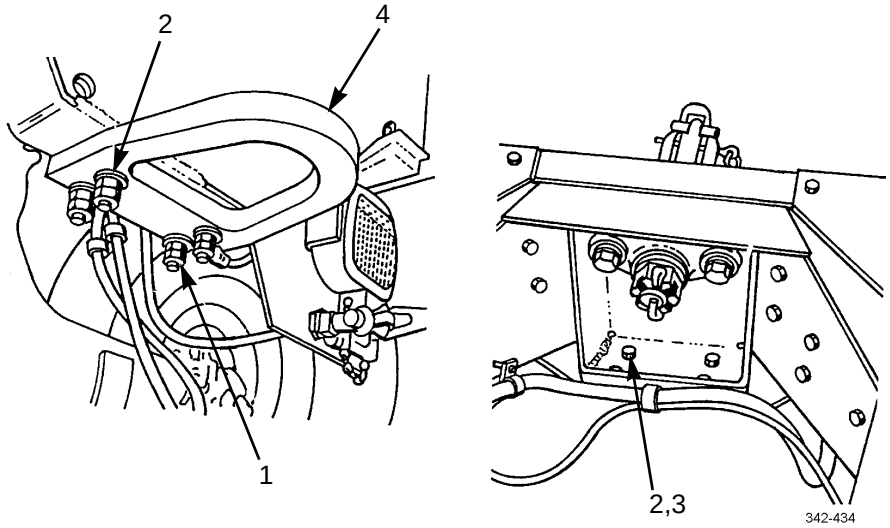

INSTALLATION

Install towing bracket (4) on vehicle frame with four bolts (3), eight washers (2), and eight new locknuts (1).

END OF WORK PACKAGE

TOWING BRACKET REPLACEMENT (M916A3, M917A2) 0235 00

THIS WORK PACKAGE COVERS

Removal, Installation

INITIAL SETUP

Tools and Special Tools

Tool kit, general mechanic's (Item 50, WP 0306 00

Material/Parts

Nut, lock (P/N M45913/1-8CG5C) (8)

REMOVAL

1. Remove spring pin (5) and pin (3).
2. Remove eight locknuts (6), four washers (7), bolts (1), washers (2), and bracket (4). Discard locknuts.

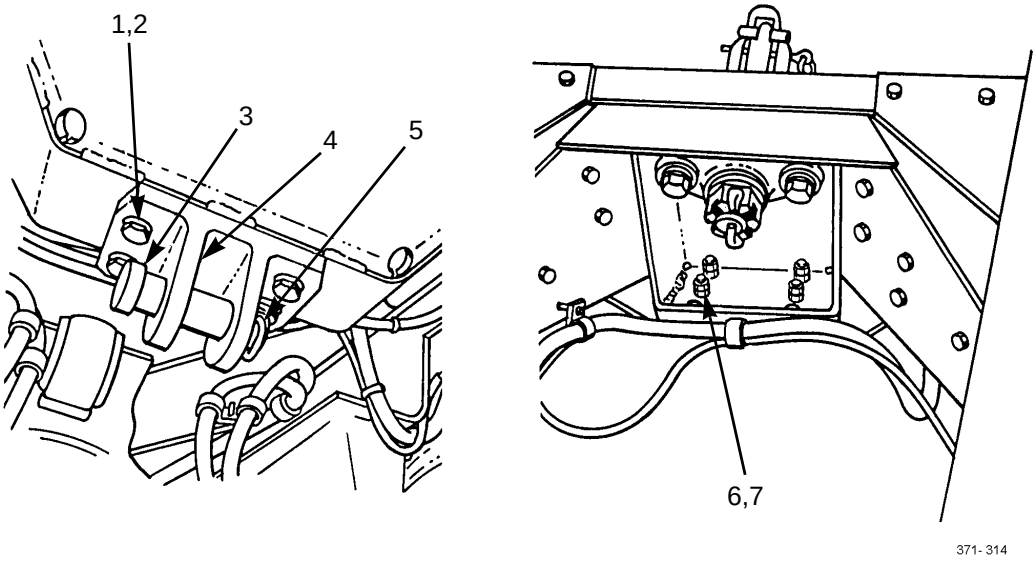

INSTALLATION

1. Install bracket (4), four washers (2), four bolts (1), four washers (7), and eight new locknuts (6).
2. Install pin (2) and spring pin (5).

END OF WORK PACKAGE

TAILLIGHT BRACKET REPLACEMENT (M915A3 OLD MODEL) 0236 00

THIS WORK PACKAGE COVERS

Removal, Installation

INITIAL SETUP

Tools and Special Tools

Tool kit, general mechanic's (Item 50, WP 0306 00)

Materials/Parts

Nut, lock (P/N M45913/1-8CG5C) (2)

Equipment Condition

Rear blackout light removed (WP 0100 00)

Taillight removed (WP 0101 00)

Rear gladhand removed (WP 0194 00)

NOTE

Right and left taillight brackets are replaced the same way. Left taillight bracket is shown.

REMOVAL

Remove two locknuts (5), washers (1), bracket (4), two bolts (2), and washers (3) from vehicle. Discard locknuts.

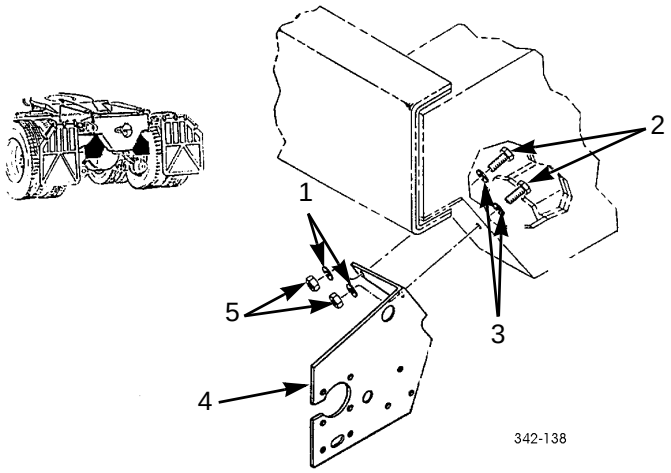

INSTALLATION

1. Install bracket (4) on vehicle with two washers (3), bolts (2), washers (1), and new locknuts (5).
2. Install rear blackout light (WP 0100 00).
3. Install taillight (WP 0101 00).
4. Install rear gladhand (WP 0194 00).

END OF WORK PACKAGE

TAILLIGHT BRACKET REPLACEMENT (M915A3 NEW MODEL, M916A3, M917A2) 0237 00

THIS WORK PACKAGE COVERS

Replacement

INITIAL SETUP

Tools and Special Tools

Tool kit, general mechanic's (Item 50, WP 0306 00)

Materials/Parts

Nut, lock (P/N M45913/1-8CG5C) (2)

Equipment Condition

Taillight removed (WP 0102 00)

Equipment Condition - Continued

Backup light removed (WP 0107 00)

Rear gladhand removed (WP 0194 00)

Rear trailer electrical receptacle removed, if replacing left-rear taillight bracket (WP 0092 00)

Backup alarm removed, if replacing left-rear taillight bracket on M917A2 (WP 0131 00)

REPLACEMENT

1. Remove two locknuts (1), screws (2), four washers (3), and taillight bracket (4) from rear of vehicle. Discard locknuts.

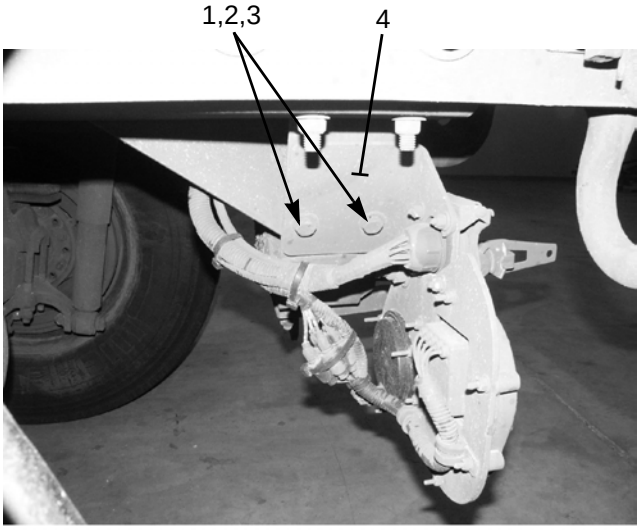

371-100

2. Install taillight bracket (4) to rear of vehicle with two screws (2), four washers (3), and new locknuts (1).
3. If removed, install rear trailer electrical receptacle (WP 0092 00).
4. If removed, install backup alarm on M917A2 (WP 0131 00).
5. Install rear gladhand (WP 0194 00)
6. Install backup light (WP 0107 00).

END OF WORK PACKAGE

REAR TIE DOWN AND ROLLER REPLACEMENT (M916A3) 0238 00

THIS WORK PACKAGE COVERS

Removal, Installation

INITIAL SETUP

Tools and Special Tools

Tool kit, general mechanic's (Item 50, WP 0306 00)

Materials/Parts

Nut, lock (P/N M45913/1-8CG5C) (2)

Nut, lock (P/N 23-00901-116) (6)

Personnel Required

Two

References

WP 0023 00

Equipment Condition

Mud flap assembly removed (TM 9-2320-302-10)

REMOVAL

1. Remove two locknuts (9), washers (10), screws (11), washers (12), and left mud flap bracket (8). Discard locknuts.
2. Remove nut (7) and screw (6).

WARNING

Roller weighs 200 lb (91 kg). Attach suitable hoist prior to removal to prevent possible injury to personnel.

3. Using suitable hoist, support tail roller (2).
4. Remove six locknuts (13), washers (14), bolts (15), washers (16), and left tie down bracket (1). Discard locknuts.
5. Remove tail roller (2).
6. Remove two lubrication fittings (4) from tail roller (2).
7. Repeat steps 1 and 4 for right mud flap bracket (3) and right tie down bracket (5).

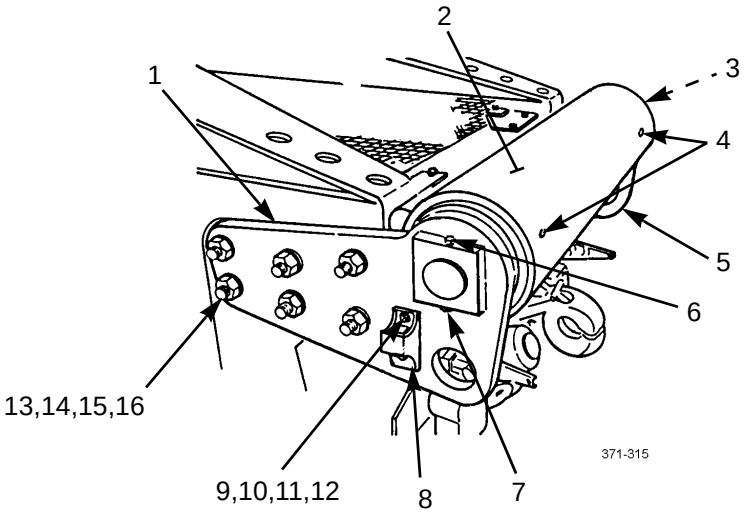

INSTALLATION

1. Install right tie down bracket (1), washers (14), bolts (15), washers (16), and six new locknuts (13).
2. Install right mud flap bracket (3), two washers (10), bolts (11), washers (12), and two new locknuts (9).

WARNING

Roller weighs 200 lb (91 kg). Attach suitable hoist prior to installation to prevent possible injury to personnel.

3. Using suitable hoist, support and install tail roller (2).
4. Repeat steps 1 and 2 for left tie down bracket (5) and left mud flap bracket (8).
5. Install screw (6) and new locknut (7).
6. Install two lubrication fittings (4) in tail roller (2).

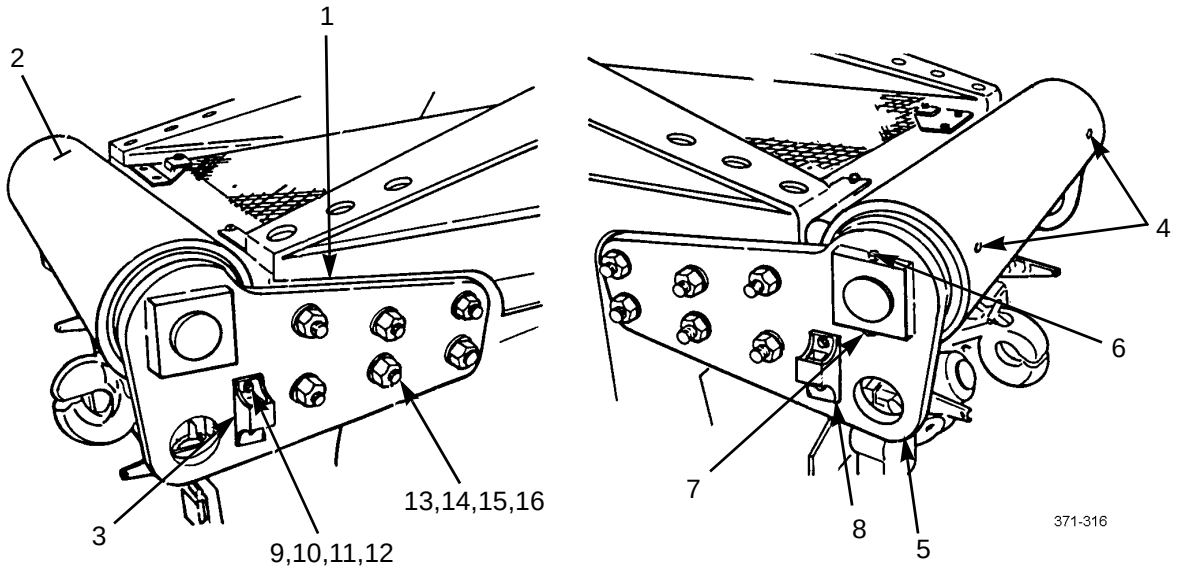

7. Install mud flap assembly (TM 9-2320-302-10).
8. Lubricate tail roller (WP 0023 00).

END OF WORK PACKAGE

FRONT SHOCK ABSORBER REPLACEMENT 0239 00

THIS WORK PACKAGE COVERS

Removal, Installation

INITIAL SETUP

Tools and Special Tools

Tool kit, general mechanic's (Item 50, WP 0306 00)

Wrench, torque, 50-250 lb-ft (Item 58, WP 0306 00)

Materials/Parts

Nut, lock (P/N M45913/2-12CG5C) (2)

REMOVAL

NOTE

Note position of shock absorber and bolts to aid in installation.

Remove two locknuts (1), washers (2), and shock absorber (3) from front of vehicle. Discard locknuts.

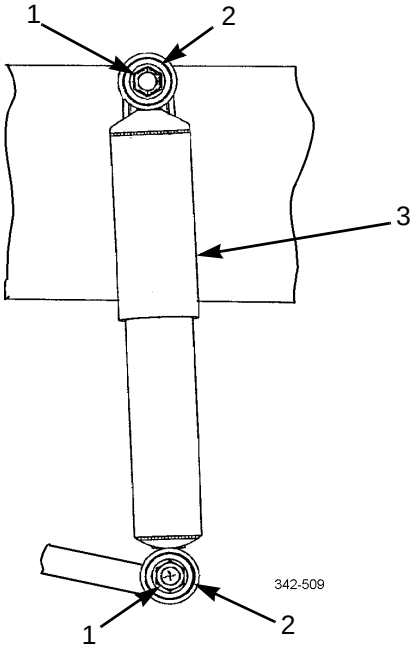

INSTALLATION

Install shock absorber (3) on vehicle with two washers (2) and new locknuts (1). Tighten locknuts to 120-180 lb-ft (163-244 Nm).

END OF WORK PACKAGE

REAR SHOCK ABSORBER REPLACEMENT 0240 00

THIS WORK PACKAGE COVERS

Removal, Installation

INITIAL SETUP

Tools and Special Tools

Tool kit, general mechanic's (Item 50, WP 0306 00)

Wrench, torque, 100-600 lb-ft (Item 59, WP 0306 00)

Materials/Parts

Nut, lock (P/N M45913/2-12CG5C) (2)

REMOVAL

NOTE

Note position of shock absorber and bolts for installation.

Remove two locknuts (4), washers (3), bolts (2), and shock absorber (1) from rear of vehicle. Discard locknuts.

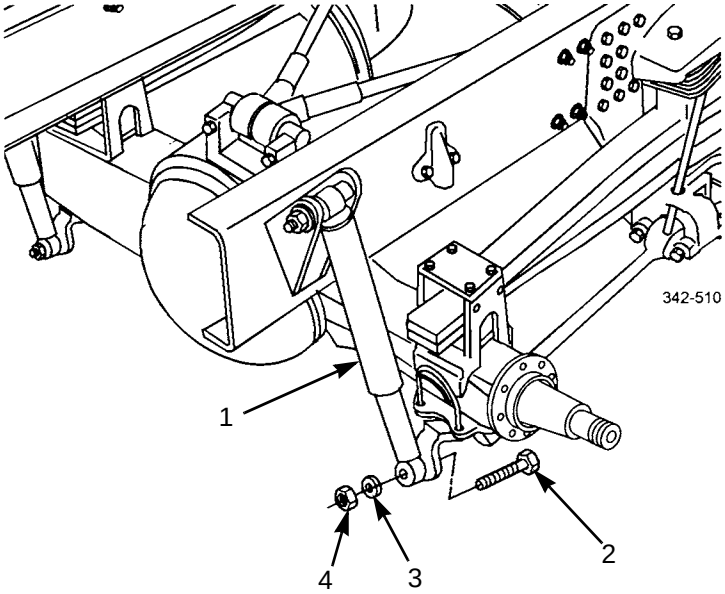

INSTALLATION

Install shock absorber (1) on vehicle with two bolts (2), washers (3), and new locknuts (4). Tighten locknuts to 241 lb-ft (327 Nm).

END OF WORK PACKAGE

BRUSH GUARD REPLACEMENT 0241 00

THIS WORK PACKAGE COVERS

Removal, Installation

INITIAL SETUP

Tools and Special Tools

Tool kit, general mechanic's (Item 50, WP 0306 00)

Materials/Parts

Nut, lock (P/N M45913/1-5CBB) (8)

Equipment Condition

Hood opened (TM 9-2320-302-10)

REMOVAL

WARNING

Use extreme caution when handling heavy parts. Provide adequate support and use assistance during procedure. Failure to follow this warning may result in injury to personnel.

NOTE

Note location of mounting holes to aid in installation.

1. Remove six locknuts (6), washers (7), bolts (1), washers (2), and brush guard (9) from hood (8). Discard locknuts.
2. Remove two locknuts (4), washers (5), and top plate (3) from hood (8). Discard locknuts.

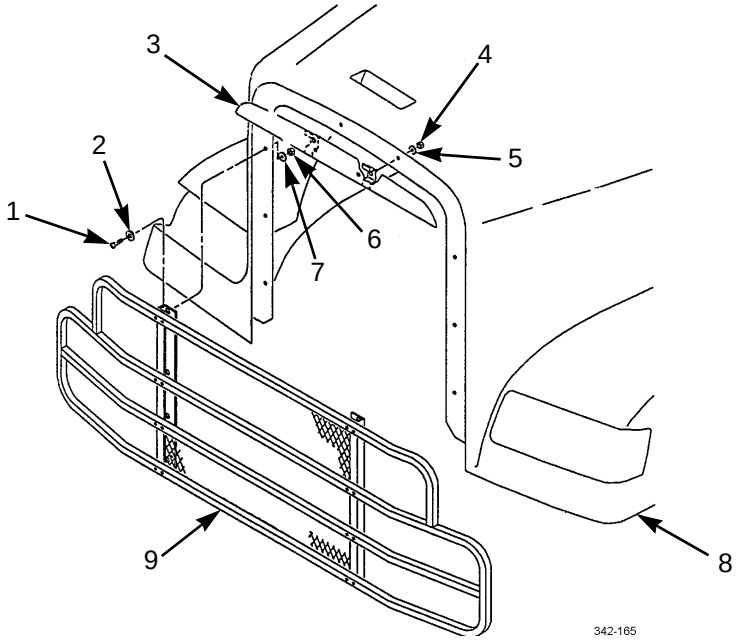

INSTALLATION

Use extreme caution when handling heavy parts. Provide adequate support and use assistance during procedure. Failure to follow this warning may result in injury to personnel.

1. Install top plate (3) on hood (8) with two washers (5) and new locknuts (4).
2. Install brush guard (9) on hood (8) with six washers (2), bolts (1), washers (7), and new locknuts (6).
3. Close hood (TM 9-2320-302-10).

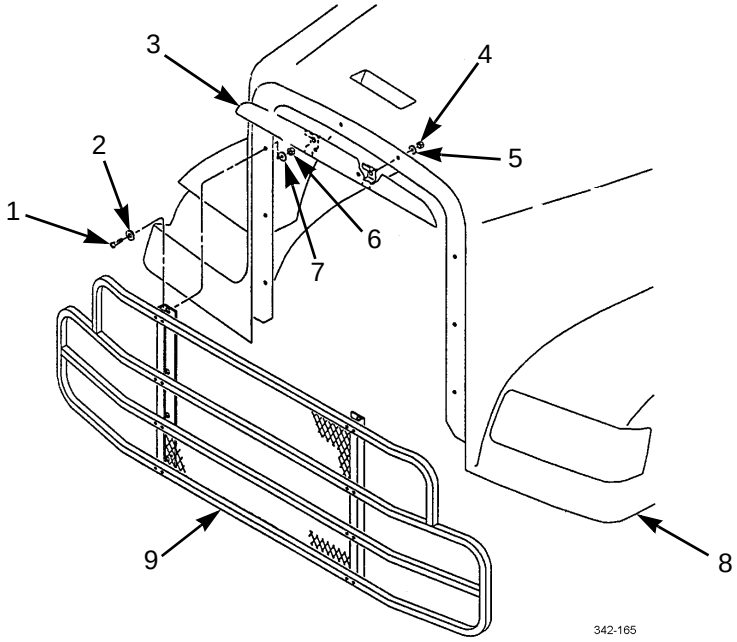

END OF WORK PACKAGE

ENGINE HOOD ASSEMBLY REPLACEMENT 0242 00

THIS WORK PACKAGE COVERS

Removal, Installation

INITIAL SETUP

Tools and Special Tools

Tool kit, general mechanic's (Item 50, WP 0306 00)

Materials/Parts

Straps, tiedown (Item 33, WP 0305 00)

Nut, lock (P/N MS51988-7) (2)

Personnel Required

Four

References

WP 0244 00

Hood opened (TM 9-2320-302-10)

REMOVAL

NOTE

- Note location of tiedown straps to aid in installation.
- Disconnections/connections are same on both sides except for one additional connector on left side. Right side is illustrated.

1. Remove tiedown straps (4).
2. Remove two bolts (5), washers (6), and clamps (7).
3. Remove screw (1), washer (2), and clamp (3).
4. Disconnect connectors (8) (five on left side, four on right side).

NOTE

If equipped, disconnect fog light connector on each side.

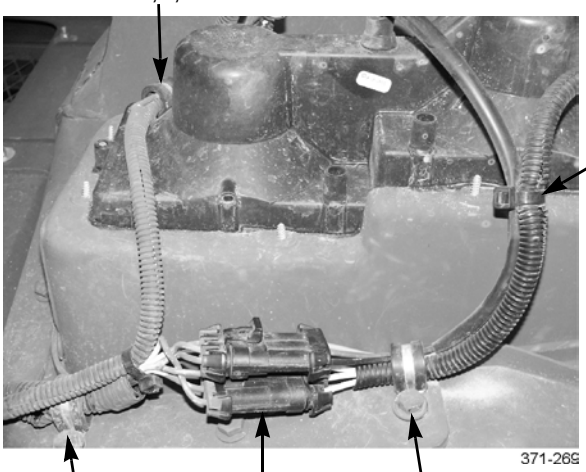

REMOVAL - CONTINUED

WARNING

When removing tilt assist cables, hood must be supported to prevent damage to hood or injury to personnel.

5. Support center of hood (9).
6. Open two chain links (11) by loosening two nuts (12) and remove two tilt assist cables (10) from chain links. Rotate cables, hood spring, and crossmember downwards against top of hood.

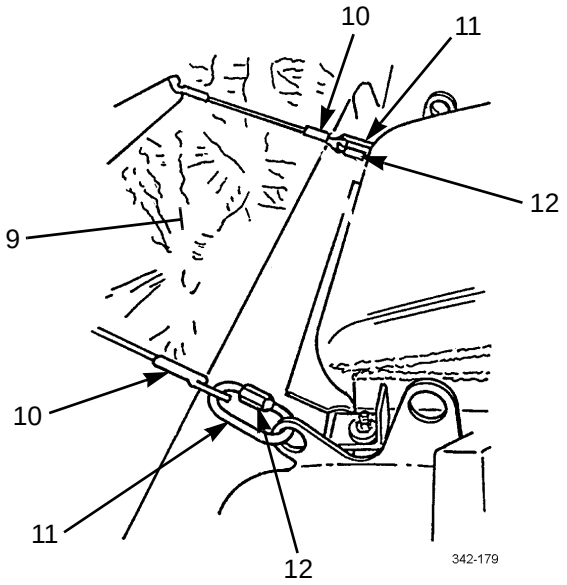

7. Close hood (7) (TM 9-2320-302-10).
8. Remove two locknuts (14) and bolts (13) from hinges (15). Discard locknuts.

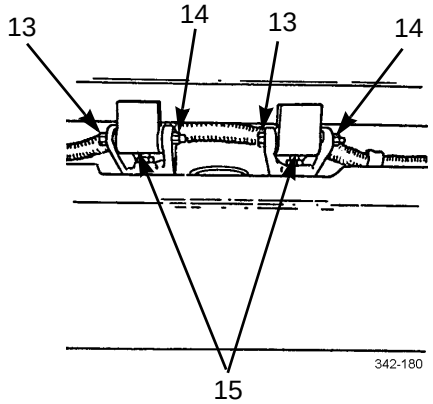

REMOVAL - CONTINUED

WARNING

Use extreme caution when handling heavy parts. Provide adequate support and use assistance during procedure. Failure to follow this warning may result in injury to personnel.

9. Using four personnel, lift hood (9) approximately 4 in (10.2 cm) and walk toward front of vehicle until hood clears vehicle.

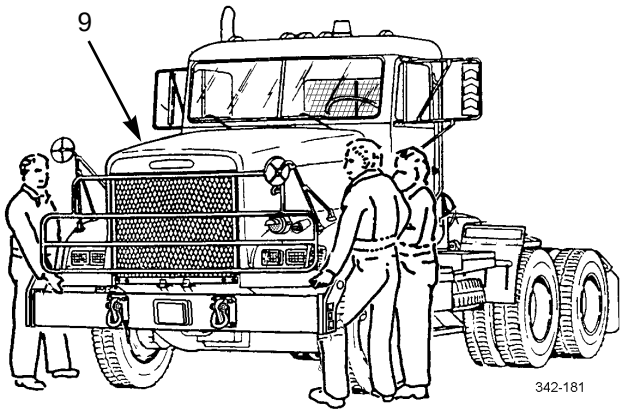

INSTALLATION

WARNING

Use extreme caution when handling heavy parts. Provide adequate support and use assistance during procedure. Failure to follow this warning may result in injury to personnel.

1. Using four personnel, install hood (9) to vehicle aligning hinge bracket on hood with bracket on front bumper.
2. Install two bolts (13) and new locknuts (14) to hinges (15).

WARNING

When installing tilt assist cable, hood must be supported to prevent damage to hood or injury to personnel.

3. Open and support hood (9) (TM 9-2320-302-10).
4. Install two tilt assist cables (10) in two chain links (11) and close chain links by tightening two nuts (12).

INSTALLATION - CONTINUED

5. Position harnesses and connect connectors (8) (five on left side, four on right side).

NOTE

If equipped, connect fog light connector on each side.

6. Install screw (1), washer (2), and clamp (3).
7. Install two bolts (5), washers (6), and clamps (7).
8. Install tie down straps (4).

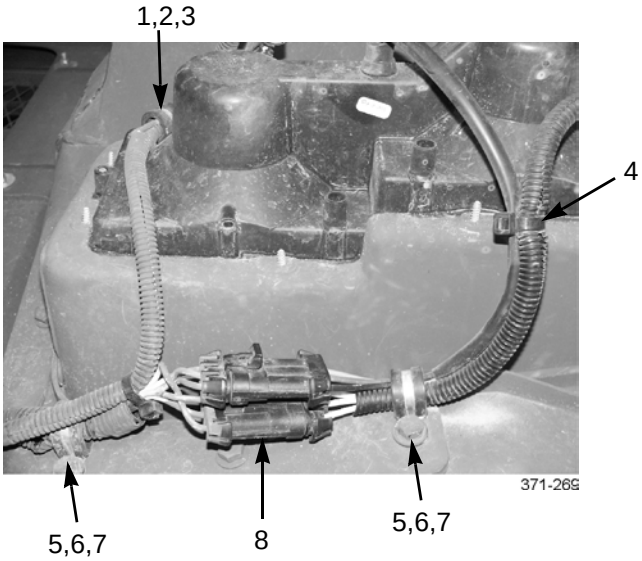

9. Close hood (TM 9-2320-302-10).
10. Perform hood adjustment (WP 0244 00).

END OF WORK PACKAGE

HOOD ASSEMBLY REPAIR 0243 00

THIS WORK PACKAGE COVERS

Disassembly, Assembly

INITIAL SETUP

Tools and Special Tools

Tool kit, general mechanic's (Item 50, WP 0306 00)

Materials/Parts

Nut, lock (P/N 23-09336-005) (4)

Nut, lock (P/N M45913/1-8CG5C) (2)

Nut, lock (P/N M45913/1-5CG5C)

Nut, lock (P/N MS51988-7)

Equipment Condition

Headlights removed (WP 0097 00)

Blackout drive lights removed (WP 0098 00)

Blackout marker lights removed (WP 0099 00)

Spotter mirrors removed (WP 0277 00)

Brush guard removed (WP 0241 00)

Engine hood assembly removed (WP 0242 00)

Hood liners removed (WP 0246 00)

DISASSEMBLY

NOTE

Perform step 2 for each of two hinges. Hinges may be equipped with shims. Note quantity of shims at each hinge for installation.

1. Remove locknut (5), two washers (3), screw (2), hinge (1), spacer (6), and shims, if equipped, from front crossmember (4). Discard locknut.

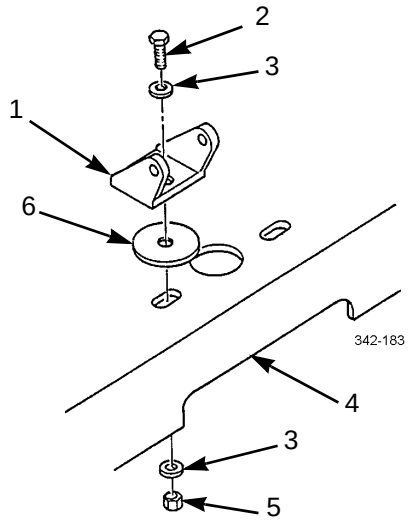

DISASSEMBLY - CONTINUED

2. Remove two screws (10), backing plate (8), and handle (9) from hood (11).
3. Remove two locknuts (16), washers (15), backing plate (14), two screws (12), and latch bracket (13) from each side of hood (11). Discard locknuts.
4. Remove two bushings (17) from crosstie (7).

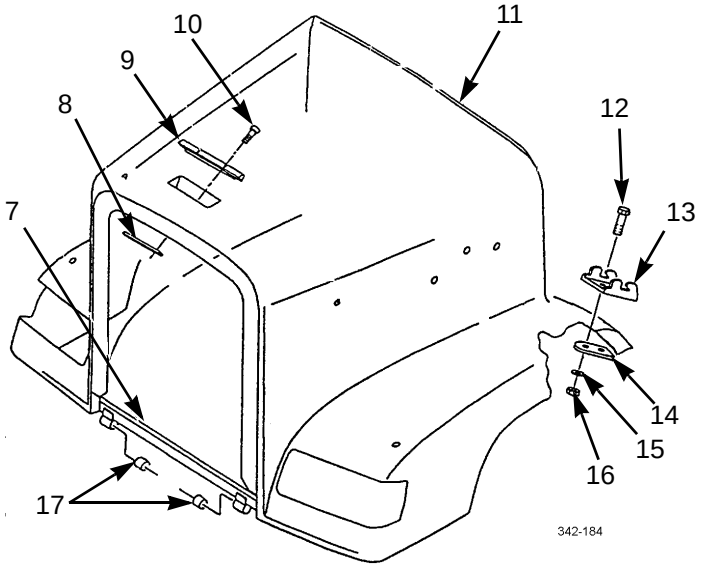

5. Remove four locknuts (28), screws (26), washers (27), and crosstie (25). Discard locknuts.
6. Remove four screws (20), washers (19), bracket (18), and crosstie plate (29) from each side of hood (11).
7. Remove four screws (21), two washers (22), hood guide (23), and mount (24) from each side of hood (11).

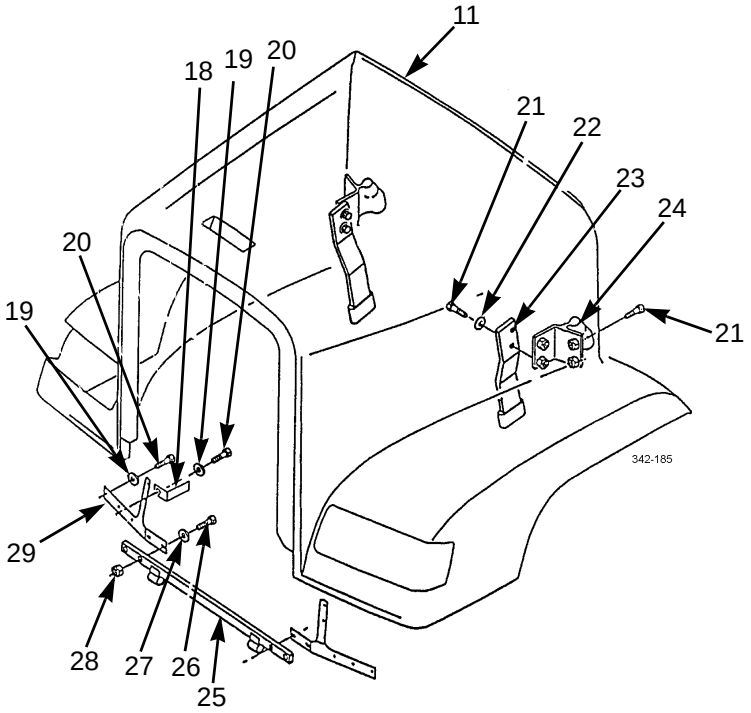

HOOD ASSEMBLY REPAIR - CONTINUED 0243 00

DISASSEMBLY - CONTINUED

8. Remove four screws (30), washers (31), and bracket (43) from hood (11).
9. Remove spring (34), locknut (37), screw (41), cable (35), two locknuts (38), screws (40), and two cables (39) from yoke (36). Discard locknuts.
10. Remove locknut (32), screw (45), and cable (35) from bracket (43). Discard locknut.
11. Remove locknut (33), screw (44), spring (34), and spacer (42) from bracket (43). Discard locknut.

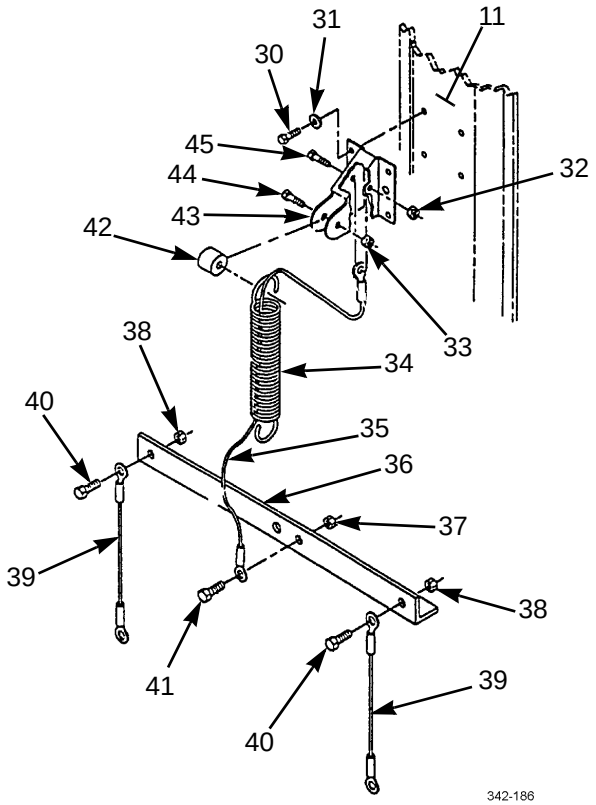

ASSEMBLY

1. Install spacer (42) and spring (34) on bracket (43) with screw (44) and new locknut (33).
2. Feed cable (35) through spring (34) and install on bracket (43) with screw (45) and new locknut (32).
3. Install cable (35) and two cables (39) on yoke (36) with screw (41) and new locknut (37), two screws (40), and new locknuts (38). Install spring (34) to yoke.
4. Install bracket (43) on hood (11) with four washers (31) and screws (30).
5. Install mount (24) on hood guide (23) on each side of hood (11) with two washers (22) and four screws (21).
6. Install crosstie plate (29) and bracket (18) on each side of hood (11) with four washers (19) and screws (20).
7. Install crosstie (25) on hood (11) with four washers (27), screws (26), and new locknuts (28).

ASSEMBLY - CONTINUED

8. Install two bushings (17) in crosstie (7).
9. Install latch bracket (13) and backing plate (14) to each side of hood (11) with two screws (12), washers (15), and new locknuts (16).
10. Install handle (9) and backing plate (8) on hood (11) with two screws (10).

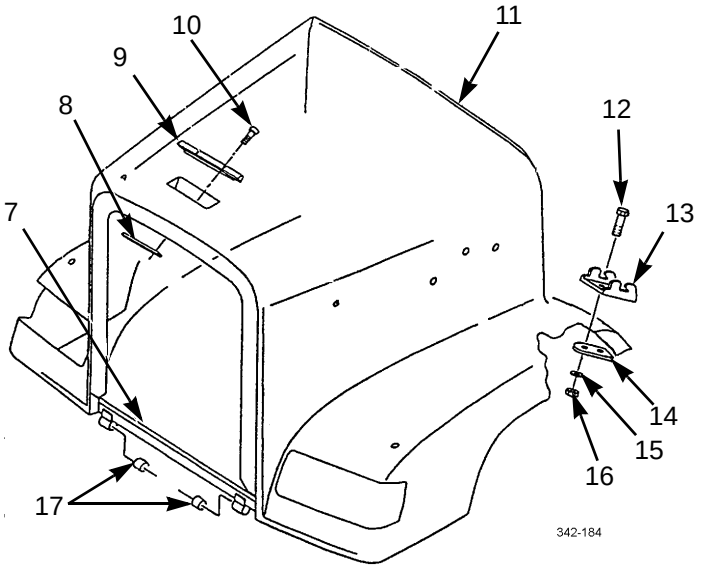

NOTE

Perform step 11 for each of two hinges.

11. Install spacer (6), shims, if equipped, and hinge (1) on front crossmember (4) with screw (2), two washers (3), and new locknut (5).

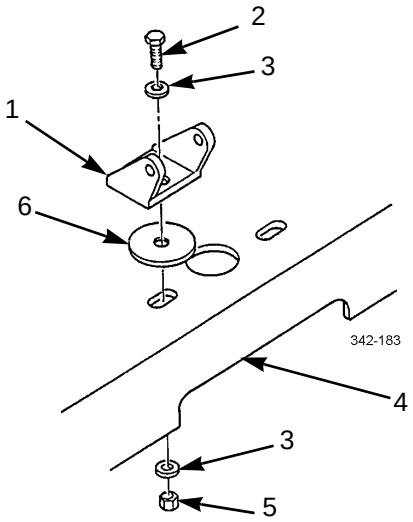

12. Install hood liners (WP 0246 00).
13. Install engine hood assembly (WP 0242 00).

ASSEMBLY - CONTINUED

14. Install brush guard (WP 0241 00).
15. Install spotter mirrors (WP 0277 00).
16. Install blackout drive (WP 0098 00).
17. Install blackout marker lights (WP 0099 00).
18. Install headlights (WP 0097 00).

END OF WORK PACKAGE

HOOD ADJUSTMENT 0244 00

THIS WORK PACKAGE COVERS

Adjustment Check, Adjustment

INITIAL SETUP

Tools and Special Tools

Tool kit, general mechanic's (Item 50, WP 0306 00)

Bar, wrecking (Item 3, WP 0306 00)

Wrench, torque, 0-300 lb-in (Item 56, WP 0306 00)

Wrench, torque, 50-250 lb-ft (Item 58, WP 0306 00)

Materials/Parts

Nut, lock (P/N 23-09336-005) (2)

Materials/Parts - Continued

Nut, lock (P/N M45913/1-5CG5C) (8)

Shim(s) (P/N 17-10320-001)

Personnel Required

Two

References

TM 9-2320-302-10

ADJUSTMENT CHECK

NOTE

Perform steps 1 through 3 to determine if hood adjustment is necessary.

1. Measure and note gap between rear edge of hood (1) and cowl (2) at seam and at 8 in (203 mm) below seam. Gap should be 1/2-3/4 in (13-19 mm).
2. Check that front of hood (1) is centered with bumper (3). Check that space between top edge of bumper (3) and lower edge of hood (1) is equal at both ends.
3. Ensure that hood (1) is not touching any components attached to frame. If any components are touching hood, identify and correct problem, and repeat steps 1 and 2.

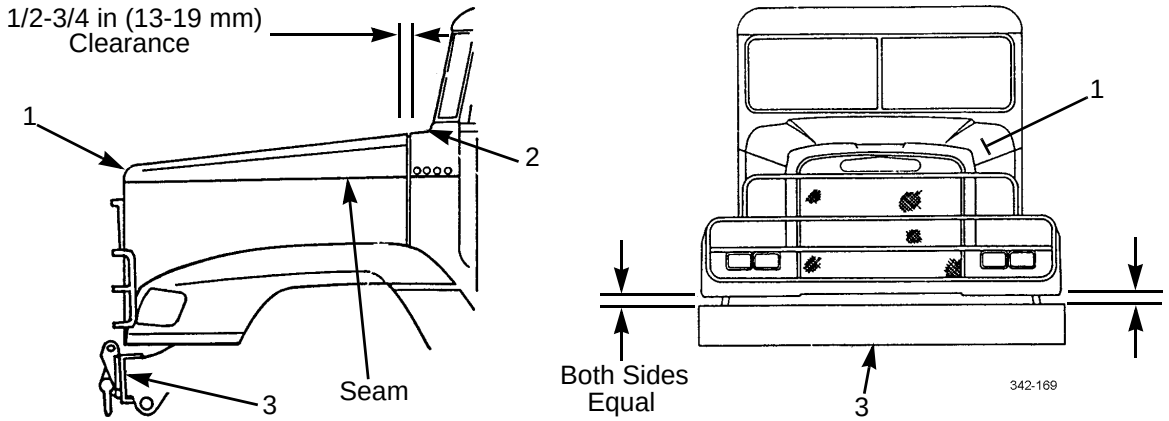

ADJUSTMENT

1. Tilt hood (1) to fully open position (TM 9-2320-302-10).

NOTE

Repeat steps 2 and 3 for both sides of vehicle.

2. Loosen four locknuts (5) just enough to allow hood (1) to slide forward and backward for adjustment.
3. Loosen locknut (4) just enough to allow hood (1) to slide side-to-side for adjustment.

NOTE

- In step 4, locknut must be kept tight enough for brackets to remain stationary despite pulling force of hood tilt assist springs.
- Repeat step 4 for both nuts.

4. Loosen locknut (6) just enough to allow hood (1) to slide for adjustment.

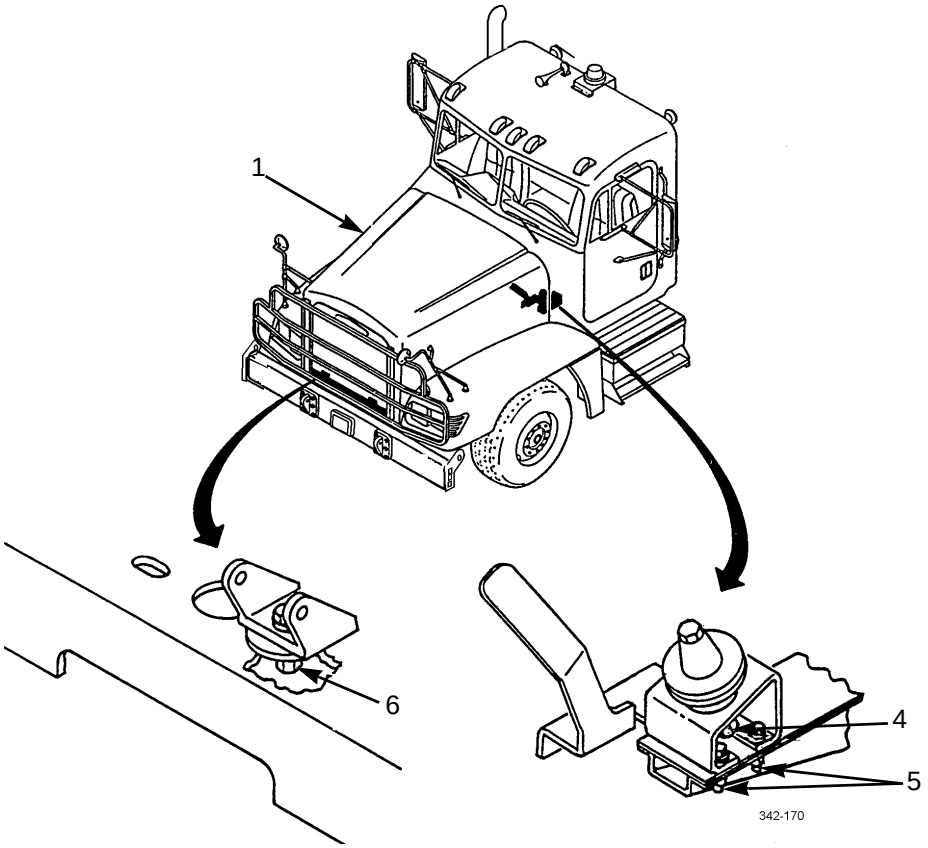

NOTE

Prior to performing step 5, ensure that hood is centered and that components do not touch under hood when hood is lowered.

5. Close hood (1) and fasten two hood latches (7).

ADJUSTMENT- CONTINUED

6. Measure gap between hood (1) and cowl (2) 8 in (203 mm) below seam on both sides. Gap should be 1/2-3/4 in (13-19 mm). If gap is incorrect, move hood (1) forward or backward until gap is correct on both sides.
7. Check seams on both sides of hood (1) and cowl (2) for alignment. If seams are not aligned, note distance between seams.

NOTE

When performing step 8, use care not to disturb adjustment performed in step 6.

8. Tilt hood (1) to fully open position.
9. Loosen locknut (4) just enough to allow installation or removal of spacers (8), as necessary.
10. Install or remove spacers (8) to raise or lower hood (1) to align seams.
11. Close hood (1) and repeat steps 7 through 10 until seam is aligned.

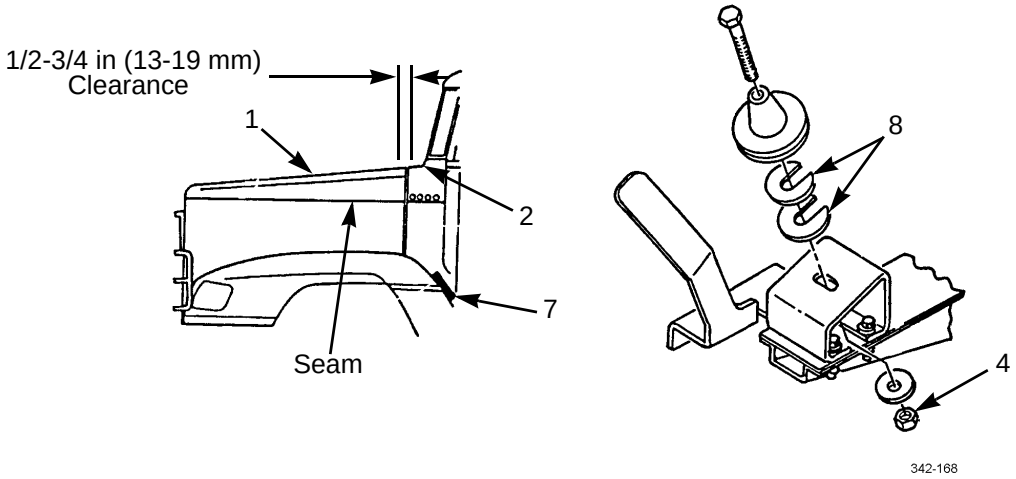

NOTE

Perform steps 12 through 20 only if all spacers have been removed and seam is still not in alignment.

12. Remove locknut (4), washer (13), bolt (9), and locator (10). Discard locknut.
13. Remove four locknuts (5), washers (12), and screws (11). Discard locknuts.

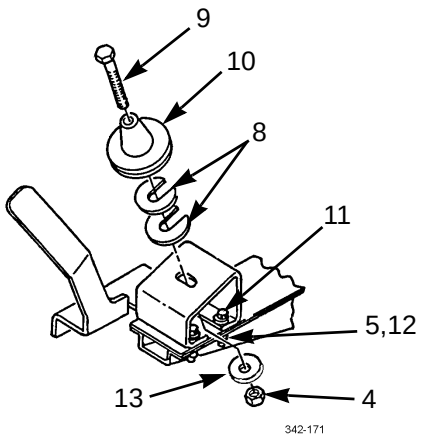

ADJUSTMENT- CONTINUED

14. Remove hood guide (15) from under locator bracket (14). Install hood guide on top of locator bracket.
15. Install four screws (11), washers (12), and new locknuts (5) just tight enough to allow forward or backward adjustment.
16. Install locator (10), bolt (9), washer (13), and new locknut (4) just tight enough to allow for installation of spacers (8).
17. Repeat steps 8 through 11 until seam alignment is attained.
18. Tighten locknut (4) just enough to allow side-to-side movement for adjustment.

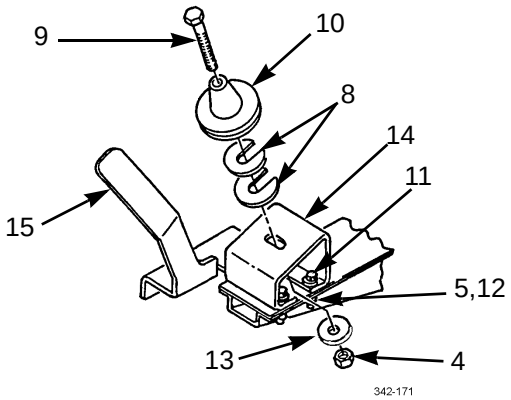

19. Repeat steps 9 through 18 for opposite side, if necessary.
20. Repeat steps 5 and 6.

NOTE

Perform step 21 only if required.

21. Close hood (1) and fasten two hood latches (7).
22. Measure and note gap between rear edge of hood (1) and cowl (2) at 1 in (25.4 mm) below seam and at 12 in (305 mm) below seam. Gap should be 1/2-3/4 in (13-19 mm).

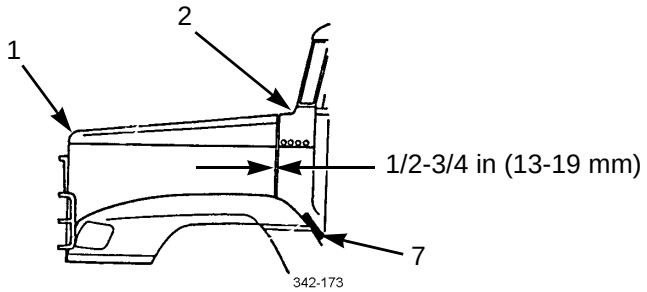

NOTE

- Perform steps 23 through 25 if gap is not correct.
- Repeat step 23 for both nuts.

23. Loosen locknut (6) just enough to allow for installation or removal of spacers (16).

ADJUSTMENT- CONTINUED

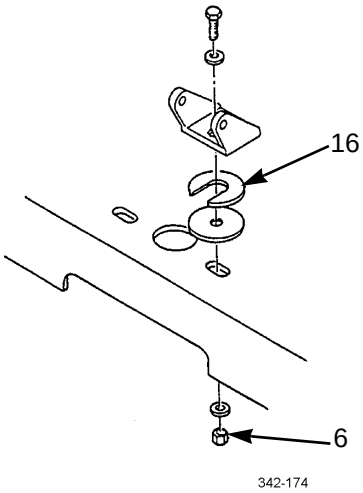

NOTE

When performing step 24, amount of spacers must be equal under both hood mounting brackets. DO NOT use more than 3/4 in (19 mm) of spacers.

24. Using pry bar, raise front of hood (1) enough to insert or remove spacers (16) as needed to make gap between hood and cowl (2) equal, as measured in step 22.
25. Repeat step 22.
26. Tighten two locknuts (6) to 85 lb-ft (115 Nm).

NOTE

When performing step 27, be extremely careful to prevent movement of locator brackets (14).

27. Carefully tilt hood (1) to fully open position.
28. Measure distance between centerline of bolt (9) and outboard face of hood guide (15). Distance must be 2-5/8 in (67 mm). If necessary, move hood guide to obtain correct measurement.
29. Tighten four locknuts (5) to 178 lb-in (20 Nm).
30. Tighten locknut (4) to 70 lb-ft (95 Nm).

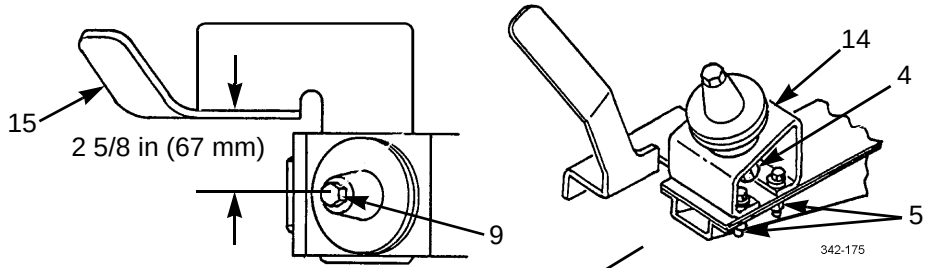

31. Repeat steps 29 and 30 for opposite side.

END OF WORK PACKAGE

HOOD LATCH REPLACEMENT 0245 00

THIS WORK PACKAGE COVERS

Removal, Installation

INITIAL SETUP

Tools and Special Tools

Tool kit, general mechanic's (Item 50, WP 0306 00)

Materials/Parts

Nut, lock (P/N 23-09336-005) (4)

Nut, lock (P/N M45913/1-4CG5C) (4)

REMOVAL

NOTE

Perform the following steps for each of two hood latches.

1. Remove two locknuts (1), washers (2), backing plate (3), two screws (5), and hood catch (4). Discard locknuts.
2. Remove two locknuts (7), washers (8), screws (9) and hood latch (6). Discard locknuts.

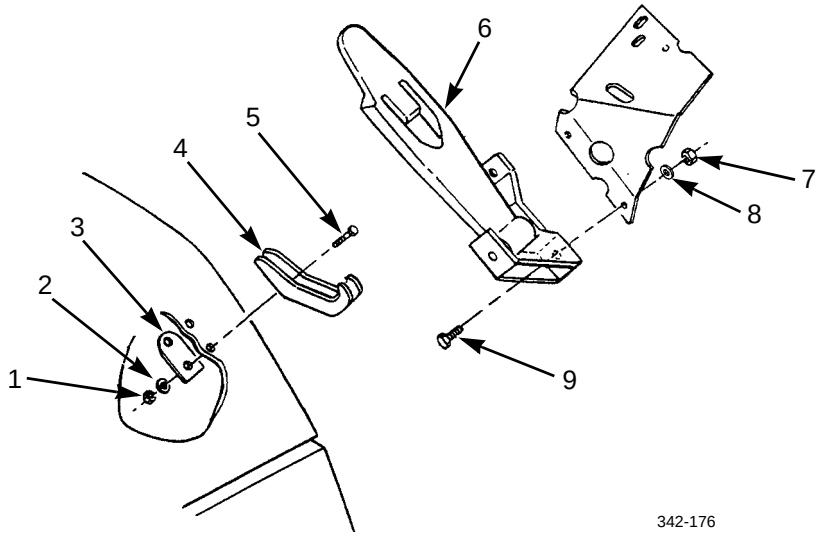

INSTALLATION

1. Install hood latch (6) with two screws (9), washers (8), and new locknuts (7).
2. Install hood catch (4) and backing plate (3) with two screws (5), washers (2) and new locknuts (1).

END OF WORK PACKAGE

HOOD LINER REPLACEMENT 0246 00

THIS WORK PACKAGE COVERS

Removal, Installation

INITIAL SETUP

Tools and Special Tools

Tool kit, general mechanic's (Item 50, WP 0306 00)

Drill, electric, portable (Item 9, WP 0306 00)

Drill set, twist (Item 10, WP 0306 00)

Materials/Parts

Tape, double-sided (Item 35, WP 0305 00)

Tape, duct (Item 36, WP 0305 00)

Materials/Parts - Continued

Nut, lock (P/N MS51922-1) (26)

Screw, 1/4-20x1 in (10)

Screw, self-tapping, 1/4-20x3/4 in (6)

Washer, flat 1/4 in (P/N 17W12580) (10)

Equipment Condition

Engine hood assembly removed (WP 0242 00)

REMOVAL

1. Cut or remove duct tape (5) between two top liners (6) and side liners (13).
2. Remove six rivets (8), three support straps (7), and two top liners (6) from hood (2). Discard rivets.
3. Remove eight locknuts (9), washers (10), five rivets (11), washers (1 and 12), and side liners (13) from hood (2). Discard locknuts, washers, and rivets.
4. Remove 10 screws (4), washers (3), and inner fender (14) from hood (2).
5. Repeat steps 3 and 4 for liner and inner fender on opposite side.

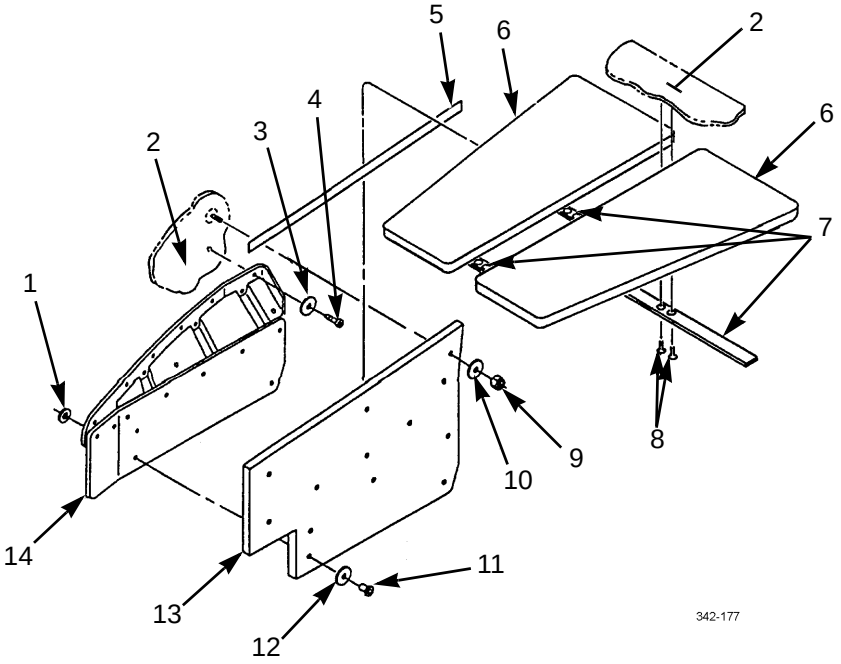

INSTALLATION

1. Install inner fender (14) to hood (2) with 10 washers (3) and screws (4).

NOTE

Use double-sided tape to hold liners in place. Rivets are replaced with self-tapping screws. Rivets with backing washers are replaced with screws and locknuts.

2. Install side liners (13) on hood (2) with five new screws (11), washers (1 and 12), eight new washers (10), and new locknuts (9).
3. Repeat steps 1 and 2 for liners and inner fenders on opposite side.
4. Install two top liners (6) on hood (2) with three support straps (7) and six new self-tapping screws (8).
5. Install duct tape (5) on each seam between two top liners (6) and side liners (13).

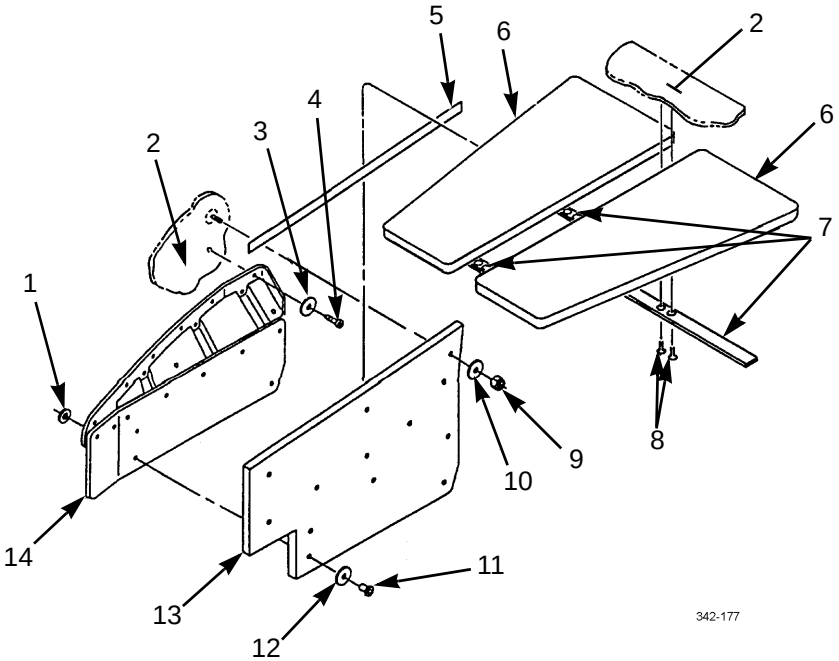

6. Install engine assembly hood assembly (WP 0242 00).

END OF WORK PACKAGE

HOOD PROP AND MOUNT REPLACEMENT (M915A3 OLD MODEL) 0247 00

THIS WORK PACKAGE COVERS

Hood Prop Removal, Hood Mount Removal, Hood Mount Installation, Hood Prop Installation

INITIAL SETUP

Tools and Special Tools

Tool kit, general mechanic's (Item 50, WP 0306 00)
Wrench, torque, 0-300 lb-in (Item 56, WP 0306 00)
Wrench, torque, 15-75 lb-ft (Item 57, WP 0306 00)

Materials/Parts

Nut, lock (P/N M45013/1-5CG5C) (8)

Nut, lock (P/N 23-09336-005) (2)

References

WP 0244 00

HOOD PROP REMOVAL

1. While supporting hood (5) in opened position, remove nut (2) and washer (3) from rod end (8).
2. Remove rod end (8) from radiator bracket (1) and remove prop (6) from hood bracket (4).
3. Loosen jamnut (7) and remove rod end (8) and jamnut from prop (6).

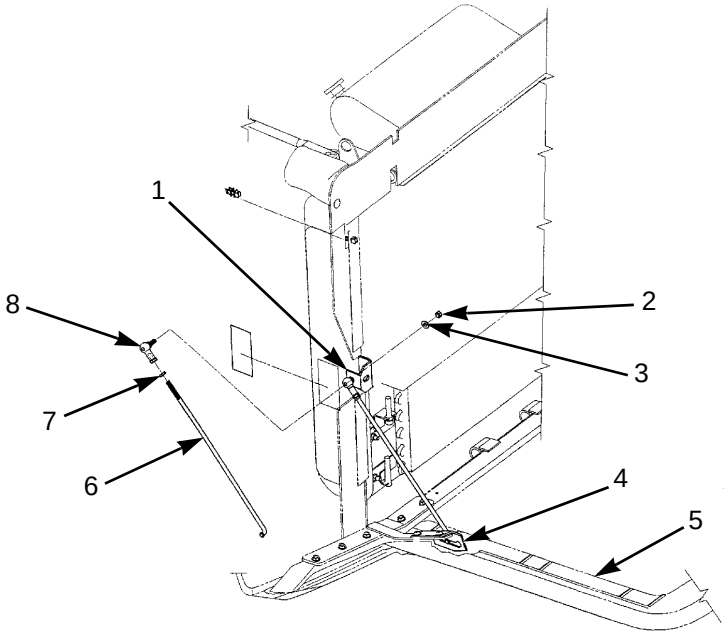

HOOD PROP REMOVAL - CONTINUED

4. Remove two screws (10) and radiator bracket (1) from radiator (11). Remove decal (13).
5. Remove two screws (12) and hood bracket (4) from hood (1).
6. Remove clip (9).

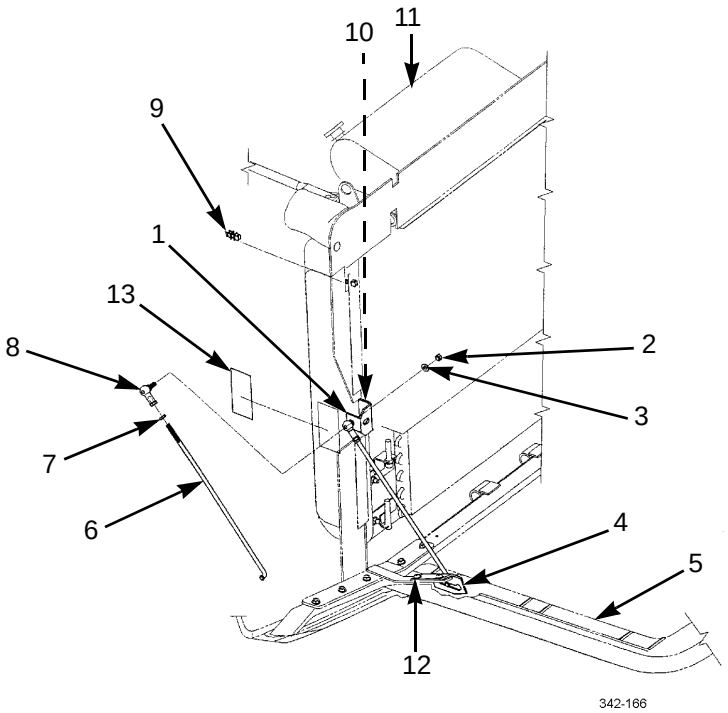

HOOD MOUNT REMOVAL

NOTE

Left and right hood mounts are removed and installed the same way. Left hood mount is shown.

1. Remove locknut (19), washer (18), screw (14), locator (23), and three spacers (15) from mounting bracket (16). Discard locknut.
2. Remove four locknuts (20), washers (21), screws (17), mounting bracket (16), and hood guide (22). Discard locknuts.

HOOD MOUNT REMOVAL - CONTINUED

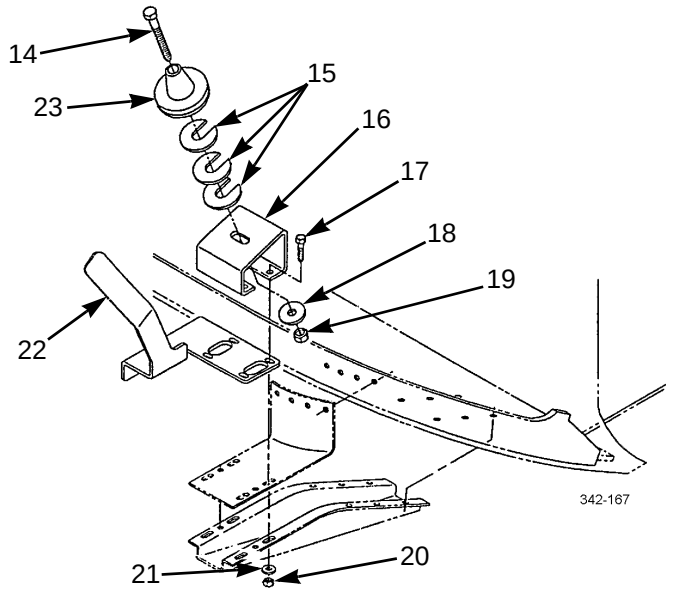

HOOD MOUNT INSTALLATION

1. Install hood guide (22) and mounting bracket (16) with four screws (17), washers (21) and new locknuts (20).
2. Install three spacers (15) and locator (23) to mounting bracket (16) with screw (14), washer (18) and new locknut (19).

HOOD PROP INSTALLATION

1. Install clip (9).
2. Install hood bracket (4) to hood (5) with two screws (12). Tighten screws to 40 lb-ft (54 Nm).
3. Install radiator bracket (1) to radiator (11) with two screws (10). Tighten screws to 180 lb-in (20 Nm). Install decal (13).
4. Install jam nut (7) and rod end (8) on prop (6). Rotate prop into rod end as far as it will go, then back out two to four turns.
5. Install rod end (8) to radiator bracket (1) with washer (3) and nut (2).
6. Install prop (6) end into hood bracket (4). End of prop should be against slot end closest to vehicle when hood is fully open and tilt assist cables are tight.
7. If no adjustment is required, tighten jam nut (7) against rod end (8). If adjustment is required, proceed to next step.
8. Rotate prop (6) until prop is against hood bracket slot end closest to vehicle when hood is fully open and tilt assist cables are tight.
9. Tighten jam nut (7) against rod end (8).
10. Adjust hood (WP 0244 00).

END OF WORK PACKAGE

HOOD PROP AND MOUNT REPLACEMENT (M915A3 NEW MODEL, M916A3, M917A2) 0248 00

THIS WORK PACKAGE COVERS

Hood Prop: Removal, Installation; Hood Mount: Removal, Installation

INITIAL SETUP

Tools and Special Tools

Tool kit, general mechanic's (Item 50, WP 0306 00)

Materials/Parts

Nut, lock (P/N 23-09336-005)

Nut, lock (P/N M45913/1-5CG5C) (6)

References

WP 0244 00

Equipment Condition

Hood opened (TM 9-2320-302-10)

HOOD PROP REMOVAL

1. Provide suitable support for hood if both hood props (1) are being removed.
2. If hood prop (1) is in use, remove hook end of prop from slot in bracket (2) at top of radiator.

HOOD PROP REMOVAL - CONTINUED

3. If stowed, remove hood prop (1) from bracket (3).
4. Remove two screws (6) and hood prop (1) with bracket (4) from hood (8).

NOTE

Note position of jamnut to ensure proper adjustment of hood prop length on installation.

5. As required, loosen jamnut (5) and separate hood prop (1) from clevis (7).

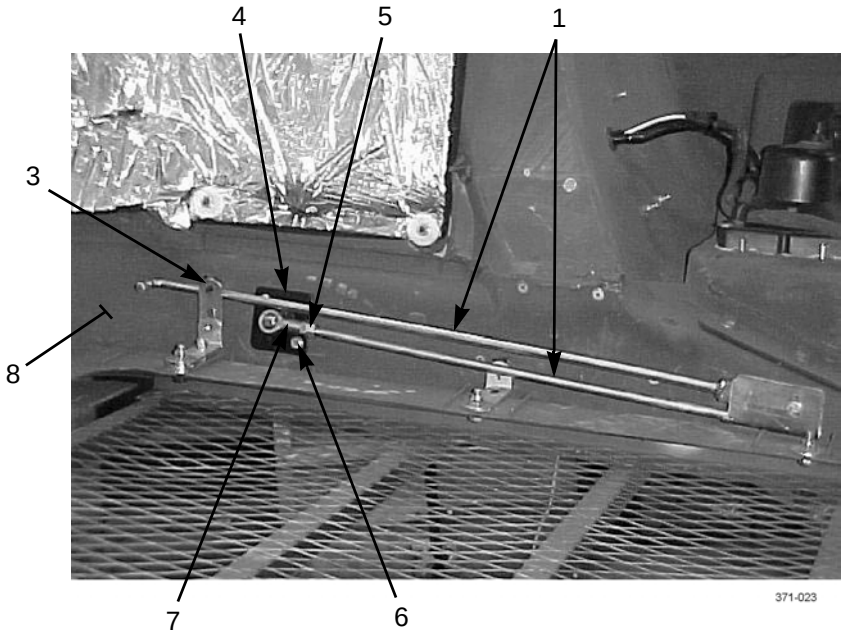

HOOD PROP INSTALLATION

1. If separated, install hood prop (1) on clevis (7). Tighten jamnut (5) so that jamnut is in same position as noted before it was removed.
2. Install mounting bracket (4) with hood prop (1) to hood (8) with two screws (6).

NOTE

Adjust hood prop length as required at jamnut.

3. Check that length of hood prop (1) is correct: Extend prop open and hook end through slot in bracket (2) at top of radiator. Weight of hood should rest on prop when hood is fully open and tilt assist cables are tight.
4. Remove support from hood.

HOOD MOUNT REMOVAL

NOTE

Note quantity of spacers for installation, to assist in hood adjustment.

1. Remove locknut (12), screw (10), hood mount locator (9), and spacers (13) from hood wedge (11). Discard locknut.

HOOD MOUNT REMOVAL - CONTINUED

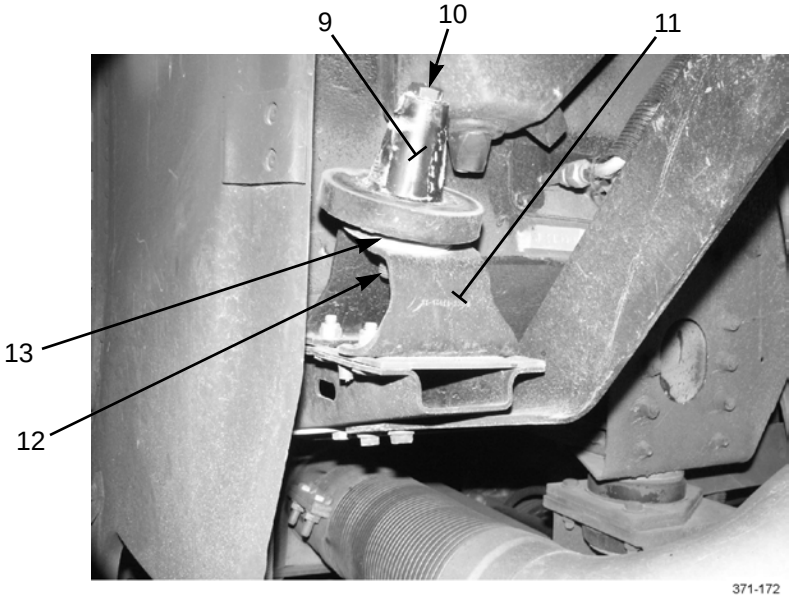

NOTE

Mark position of hood wedge for installation, to assist in hood adjustment.

2. Remove four locknuts (14), washers (15), bolts (16), and hood wedge (11) from upper bracket (18) and hood mount bracket (22). Discard locknuts.
3. Remove two locknuts (19), screws (20), washers (21), and hood guide (17) from hood mount bracket (22). Discard locknuts.

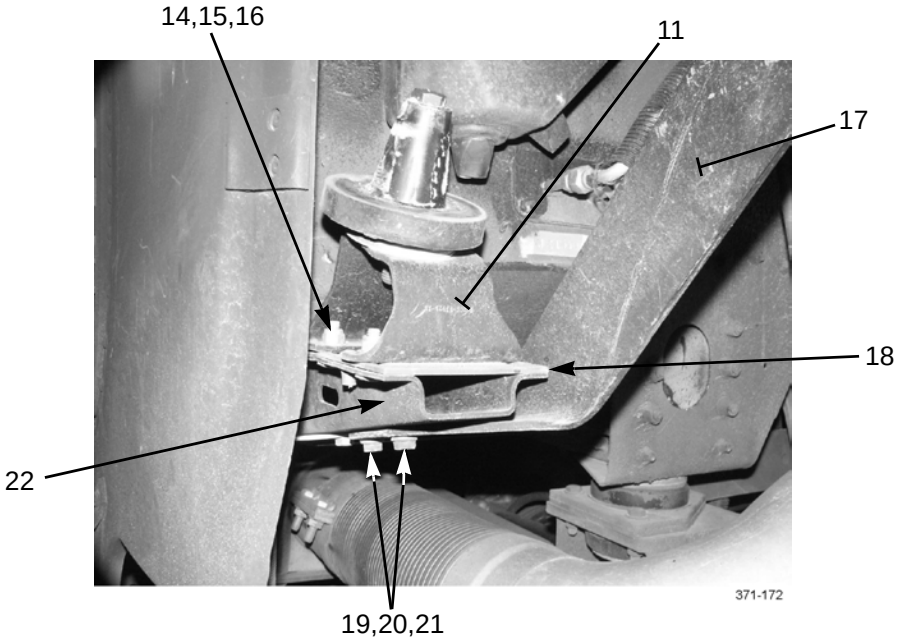

HOOD MOUNT INSTALLATION

1. Install hood guide (17) to hood mount bracket (22) with two washers (21), screws (20), and new locknuts (19).
2. Position hood wedge (11) on upper bracket (18) and hood mount bracket (22), in same position as marked during removal. Install four bolts (16), washers (15), and new locknuts (14).

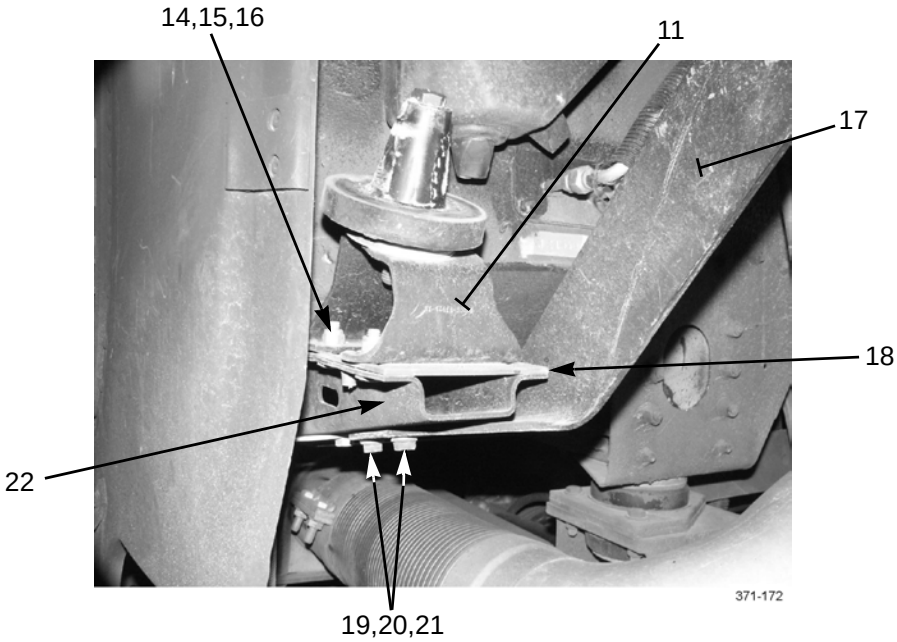

3. Position same quantity of spacers (13), as noted during removal, on hood wedge (11). Install hood mount locator (9) on hood wedge with screw (10) and new locknut (12).
4. Check hood adjustment and adjust as required (WP 0244 00).

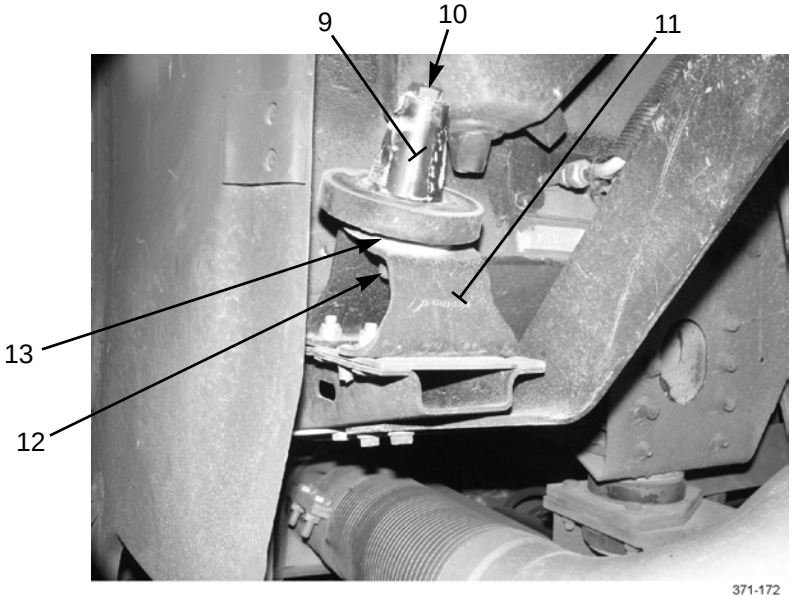

END OF WORK PACKAGE

SEAT REPLACEMENT 0249 00

THIS WORK PACKAGE COVERS

Removal, Installation

INITIAL SETUP

Tools and Special Tools

Tool kit, general mechanic's (Item 50, WP 0306 00)

Goggles, industrial (Item 14, WP 0306 00)

Personnel Required

Two

Equipment Condition

Air system drained (TM 9-2320-302-10)

Seat belt removed (WP 0251 00)

NOTE

Driver seat and passenger seat are replaced the same way.

REMOVAL

WARNING

DO NOT disconnect any air system lines or fittings unless vehicle engine is shut down and air system pressure is relieved. Failure to follow this warning could result in serious injury to personnel.

1. Disconnect air line (2).
2. With assistance, remove four bolts (3), washers (4), and seat (1) from vehicle.

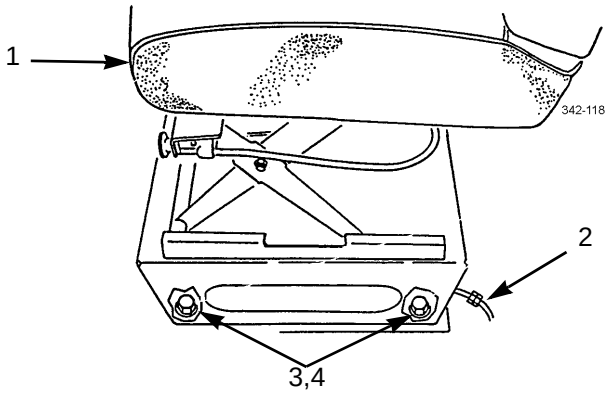

INSTALLATION

1. With assistance, install seat (1) in vehicle with four washers (4) and bolts (3).
2. Connect air line (2).
3. Install seat belt (WP 0251 00).
4. Start vehicle and build air pressure (TM 9-2320-302-10).
5. Check for leaks and operation of seat (TM 9-2320-302-10).

END OF WORK PACKAGE

SEAT REPAIR 0250 00

THIS WORK PACKAGE COVERS

Disassembly, Assembly

INITIAL SETUP

Tools and Special Tools

Tool kit, general mechanic's (Item 50, WP 0306 00)

Wrench, torque, 0-300 lb-in (Item 56, WP 0306 00)

Wrench, torque, 15-75 lb-ft (Item 57, WP 0306 00)

Materials/Parts

Parts kit (P/N 622076-001)

Parts kit (P/N 622132-001)

Parts kit (P/N 622133-001)

Parts kit (P/N 622134-001)

Materials/Parts - Continued

Parts kit (P/N 622135-001)

Parts kit (P/N 622137-001)

Parts kit (P/N 622155-001)

Parts kit (P/N 1104385-002)

Parts kit (P/N 1349236-002) (3)

Equipment Condition

Seat removed (WP 0249 00)

DISASSEMBLY

NOTE

This task is the same for driver or passenger seat.

1. Adjust to rear position and remove two screws (3), washers (2), and shoulder bolts (6) from channel (8).
2. Remove seat (1) from channel (8).

NOTE

Perform steps 3 through 8 to disassemble seat frame.

3. Remove two screws (4) and bracket (5) from each side of upper plate (7).

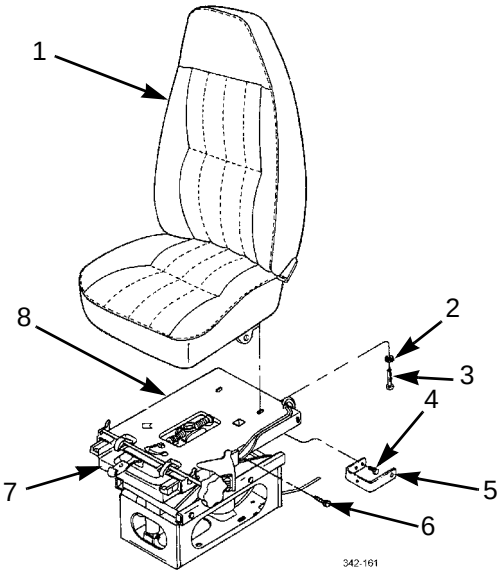

DISASSEMBLY - CONTINUED

4. Remove two wires (11) and remove back cover (10) and pad (9) from frame (12).
5. Remove seat pad support (20) and two seat tilt blocks (19).
6. Remove two pushnuts (13) and remove linkage (14) from slide shaft (21) and adjustment block (16). Discard pushnuts.
7. Remove roll pin (27), adjustment shaft (26), spacer (17), and adjustment block (16) from frame (12). Remove knob (25) from adjustment shaft. Discard roll pin.
8. Remove two pushnuts (15), support shaft (22), two springs (23), and slide shaft (21). Discard pushnuts.
9. Remove screw (24) and stop block (18).

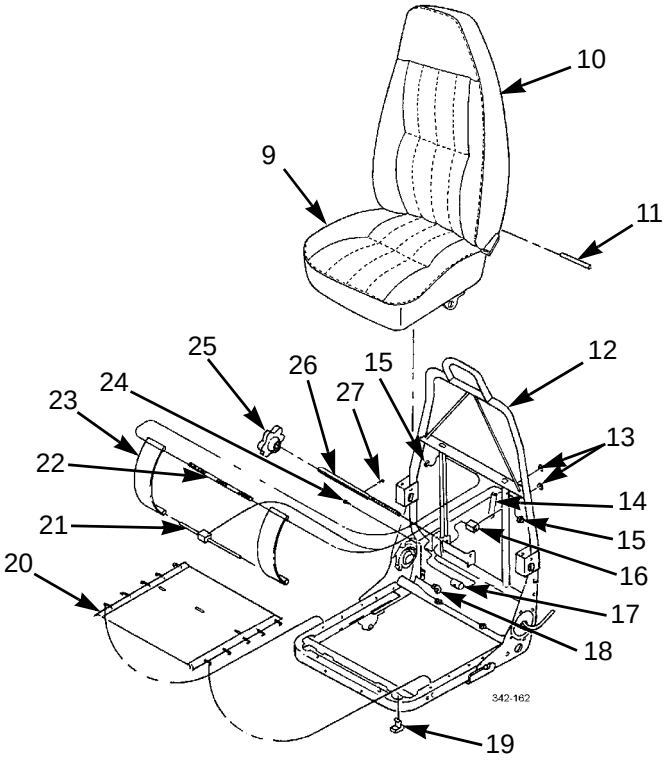

10. With channel (8) assembly still in rear position, remove isolator spring (32) and rubber bumper (31) at rear.
11. Adjust channel (8) assembly to forward position and remove isolator spring (32) and rubber bumper (31) at front.
12. Remove three wire ties (36) from air lines (37).
13. Remove six screws (38) and lockwashers (39) from sides of channel (8) and six screws (38) and lockwashers (39) from underneath channel to free two guide assemblies (50). Discard lockwashers.
14. Remove two guide assemblies (50) and valve mount (40) from channel (8).
15. Remove two rollers (51) from each guide assembly (50).
16. Disconnect end of spring (43) from latch bar (45).
17. Remove bolt (33), washer (34), pivot block (35), latch bar (45), and spacer (42) from channel (8). Remove screw (44) from latch bar.

DISASSEMBLY - CONTINUED

18. Separate channel (8) from upper plate (7) and disconnect spring (43) and split poly loom (41) from channel.
19. Remove locknut (30), washer (29), control handle (54), spring (55), split poly loom (56), washer (48), and shoulder bolt (47) from channel (8). Discard locknut.
20. Remove spring (46), detent pin (49), pop rivet (53), and knob (52) from control handle (54). Discard pop rivet.
21. Remove two brackets (28) and tilt rod (58) from channel (8). Remove knob (37) from tilt rod.

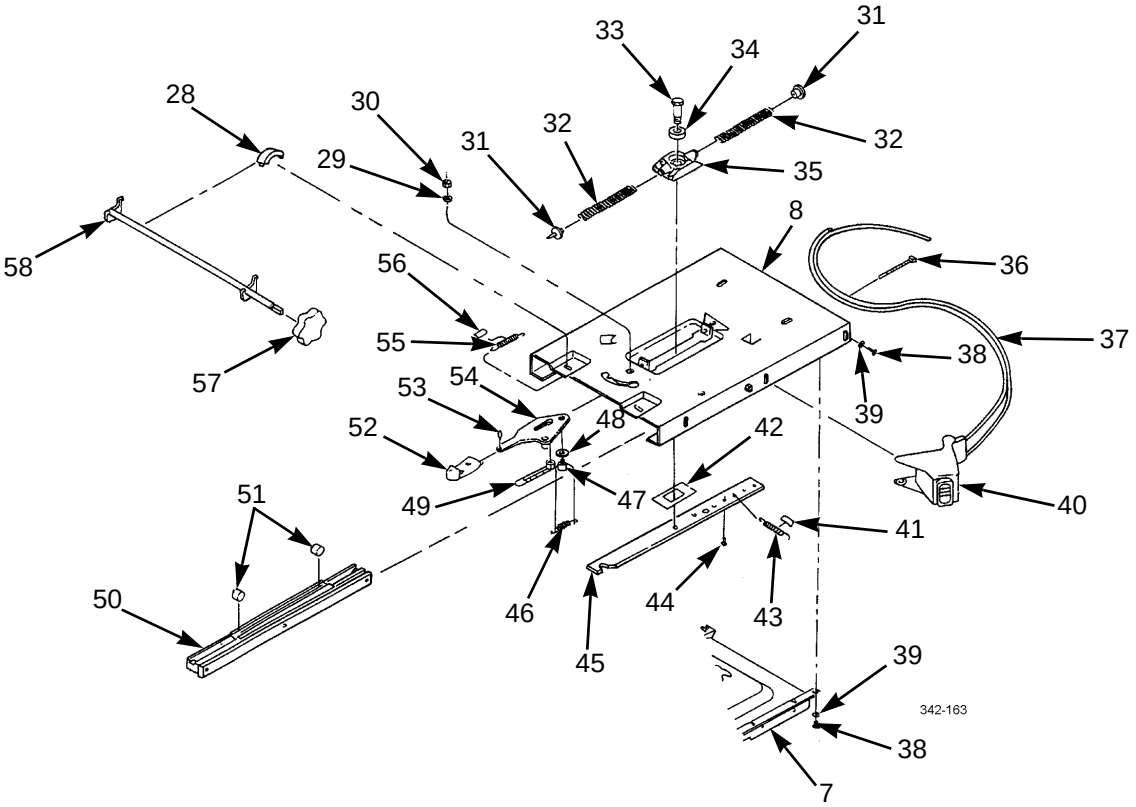

DISASSEMBLY - CONTINUED

22. Using blocking between upper plate (7) and riser (71) to hold upper plate in fully raised position.

NOTE

Perform steps 23 and 24 to remove air spring.

23. Disconnect air line (37) from air spring (69).
24. Remove screw (59), screw (75), washer (76), and air spring (69).

NOTE

Perform steps 25 and 26 to remove damper.

25. Remove two push-on fasteners (77), washers (78), and damper (80) from lever (81) and riser (71). Discard push-on fasteners.
26. Press two bearings (79) from damper (80).
27. At front of upper plate (7), remove two screws (61) from bearing blocks (67).
28. At rear of riser (71), remove two screws (72) and stop blocks (70).
29. Remove blocking supporting upper plate (7).

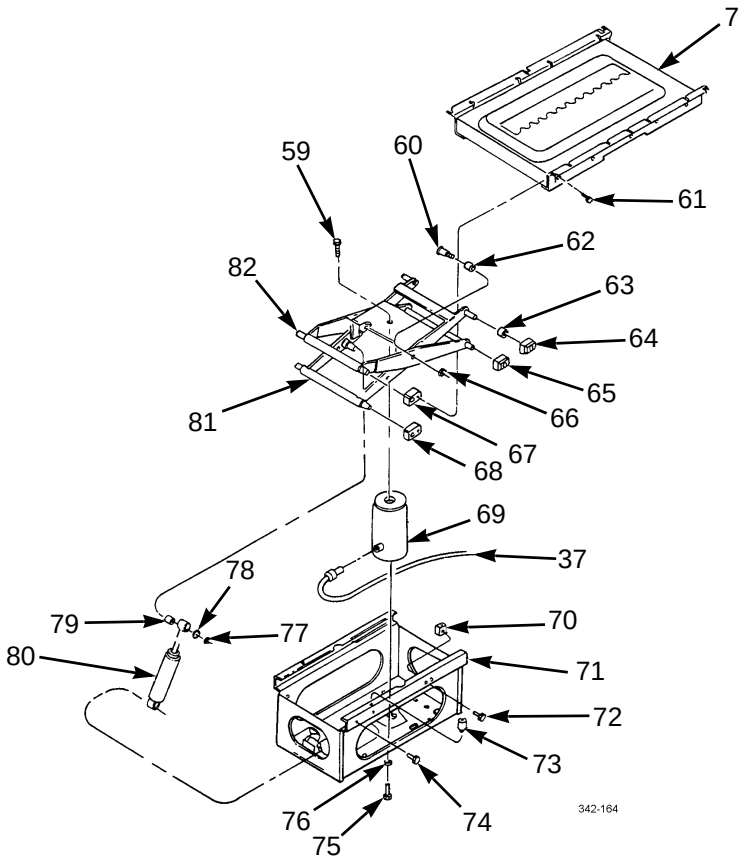

30. Slide upper plate (7) forward and rearward to remove upper plate from bearing blocks (67) and slide blocks (64).

DISASSEMBLY - CONTINUED

31. Remove bearing blocks (67) from ends of lever (82) and remove two slide blocks (64) and spacers (63) from ends of lever (81).
32. At front of riser (71), remove two screws (74) from bearing blocks (68).
33. Slide lever (81 and 82) assembly forward to remove two bearing blocks (68) and lever assembly from riser (71).
34. Remove bearing blocks (68) from ends of lever (81) and slide blocks (65) from ends of lever (82).
35. Remove two nuts (66) and shoulder bolts (60) to separate lever (81) and lever (82).
36. Press out two bearings (62) from lever (81).
37. Remove two rubber bumpers (73) from riser (71).

ASSEMBLY

1. Install two rubber bumpers (73) to riser (71).
2. Install two bearings (62) into lever (81) with flanges of bearings on outside of lever.
3. Install lever (82) to lever (81) with two shoulder bolts (60) and nuts (66). Tighten nuts to 192-240 lb-in (22-27 Nm).
4. Install two slide blocks (65) on rear of lever (82) and two bearing blocks (68) on front of lever (81).
5. Install lever (81 and 82) assembly into riser (71) and install two screws (74) into bearing blocks (68).
6. Install two spacers (63) and slide blocks (64) on ends of lever (81) and two bearing blocks (67) on ends of lever (82).
7. Install upper plate (7) over bearing blocks (67) and slide blocks (64).
8. Install two screws (61) to bearing blocks (67).
9. Using blocking between upper plate (7) and riser (71) to hold upper plate in fully raised position.
10. At rear of riser (71), install two stop blocks (70) with two screws (72).

NOTE

Perform steps 11 and 12 to install damper.

11. Press two bearings (79) into damper (80).
12. Install damper (80) to riser (71) and lever (81) with two washers (78) and new push-on fasteners (77).

NOTE

Perform steps 13 through 15 to install air spring.

13. Position air spring (69) with fitting facing forward.
14. Install air spring (69) with washer (76), screw (75), and screw (59). Tighten screw (59) to 180-228 lb-in (20-26 Nm). Tighten screw (75) to 108-132 lb-in (12-15 Nm).
15. Connect air line (37) to air spring (69).
16. Remove blocking supporting upper plate (7).

ASSEMBLY - CONTINUED

17. Install knob (57) to tilt rod (58) and install two brackets (28) and tilt rod to channel (8).
18. Install knob (52), new pop rivet (53), detent pin (49), and spring (46) to control handle (54).
19. Install shoulder bolt (51), washer (50), split poly loom (49), spring (48), control handle (47), washer (46), and new lock-nut (45) on channel (4).
20. Connect spring (43) and split poly loom (41) to channel (8) and position channel to upper plate (7).
21. Install screw (44) to latch bar (45) and install spacer (42), latch bar, and pivot block (35) to channel (8) with washer (34) and bolt (39). Tighten bolt to 26-34 lb-ft (35-46 Nm).
22. Connect end of spring (43) to latch bar (45).
23. Install two rollers (51) to each of two guide assemblies (50).
24. Position valve mount (40) and two guide assemblies (50) to channel (8).
25. Install six new lockwashers (39) and screws (38) underneath channel (8) and six new lockwashers (39) and screws (32) to sides of channel.
26. Secure air lines (37) with three wire ties (36).
27. Adjust channel (8) assembly to forward position and install front isolator spring (32) and rubber bumper (31).
28. Adjust channel (8) assembly to rear position and install rear isolator spring (32) and rubber bumper (31).

NOTE

Perform steps 28 through 33 to assemble seat frame.

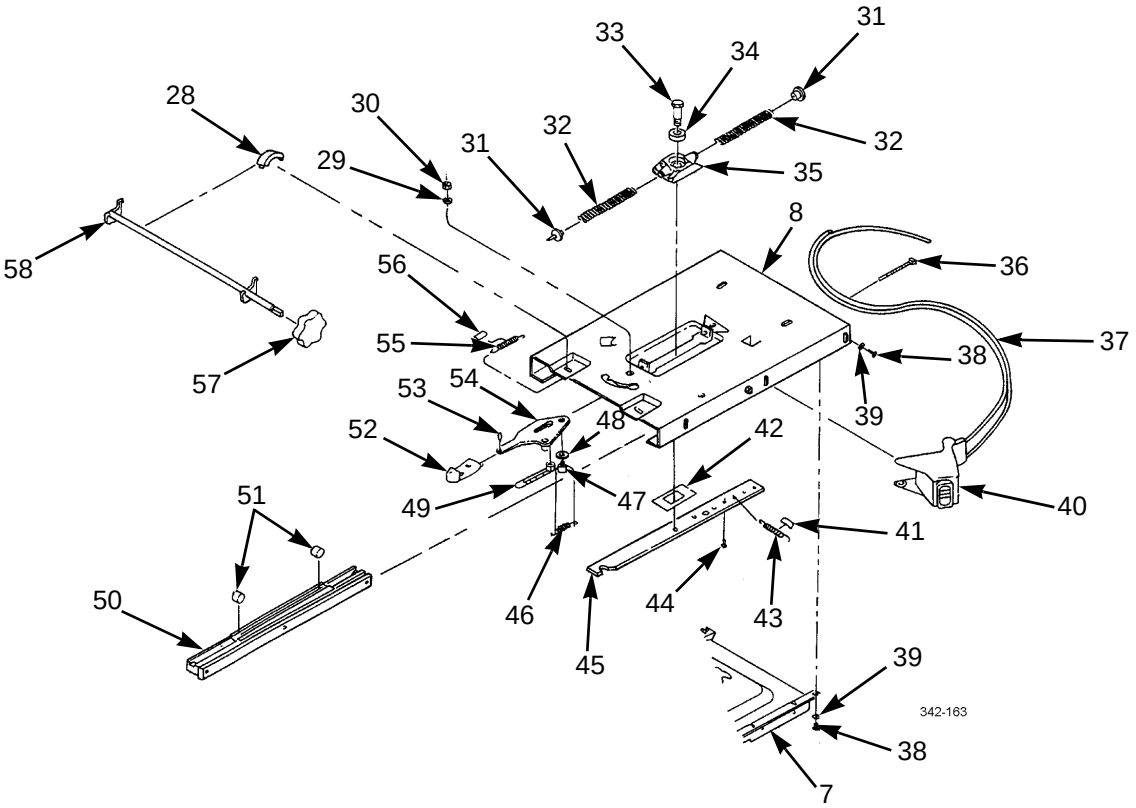

ASSEMBLY - CONTINUED

29. Install stop block (18) to seat frame (12) with screw (24).
30. Install slide shaft (21), two springs (23), support shaft (22) and two new pushnuts (15).
31. Install knob (25) to adjustment shaft (26) and install adjustment block (16), spacer (17), adjustment shaft, and new roll pin (27).
32. Install linkage (14) to adjustment block (16) and slide shaft (21) with two new pushnuts (13).
33. Install two seat tilt blocks (19) and seat pad support (20).
34. Install pad (9) and back cover (10) to frame (12) with two wires (11).

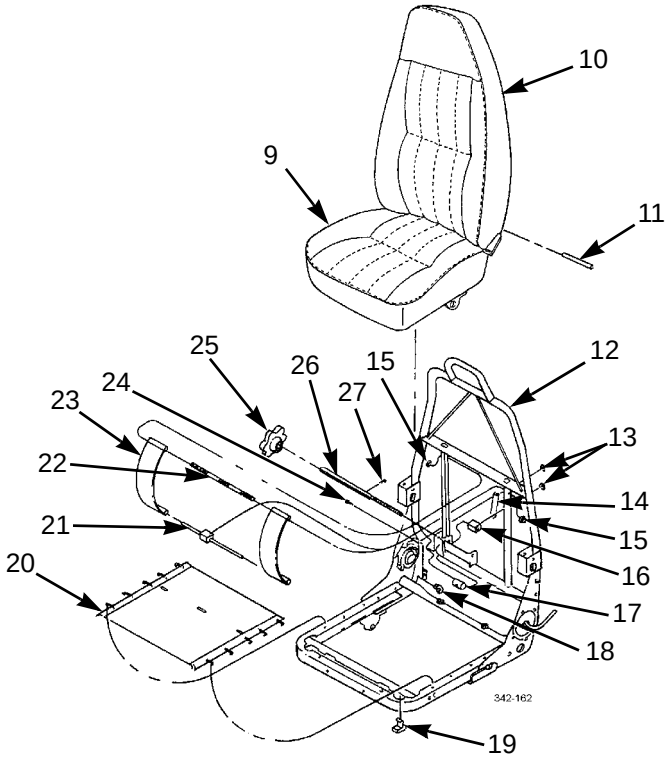

ASSEMBLY - CONTINUED

35. Install bracket (5) to each side of upper plate (7) with two screws (6). Tighten screws to 18-22 lb-ft (24-30 Nm). Position seat (1) to channel (8).
36. Install two shoulder bolts (6). Tighten bolts to 18-22 lb-ft (24-30 Nm).
37. Install two washers (2) and screws (3). Tighten screws to 18-22 lb-ft (24-30 Nm).

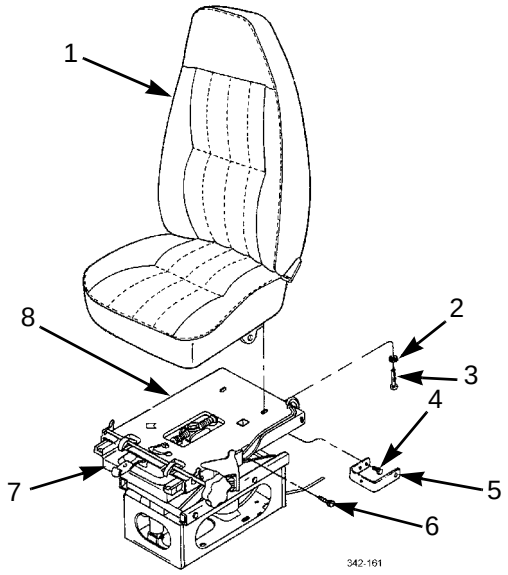

38. Install seat (WP 0249 00).

END OF WORK PACKAGE

SEAT BELT REPLACEMENT 0251 00

THIS WORK PACKAGE COVERS

Removal, Installation

INITIAL SETUP

Tools and Special Tools

Tool kit, general mechanic's (Item 50, WP 0306 00)

Materials/Parts

Nut, lock (P/N 11675) (4)

Washer, lock (P/N MS27183-15)

NOTE

Replacement mounting hardware for seat belt is supplied with new seat belt.

REMOVAL

1. Remove two locknuts (16), washer (17), and two screws (13). Discard locknuts.
2. Lift cover (19) and remove two locknuts (2), screws (11), lockwashers (10), tether belts (12), and lock belt (1). Discard locknuts and lockwashers.
3. Disconnect seat belt (3).
4. Lift cover (15) and remove screw (14).
5. Disconnect seat belt (3) from floor (18).
6. Lift cover (5) and remove screw (4), seat belt (3), washer (6), lock (9), washer (7), and bushing (8).

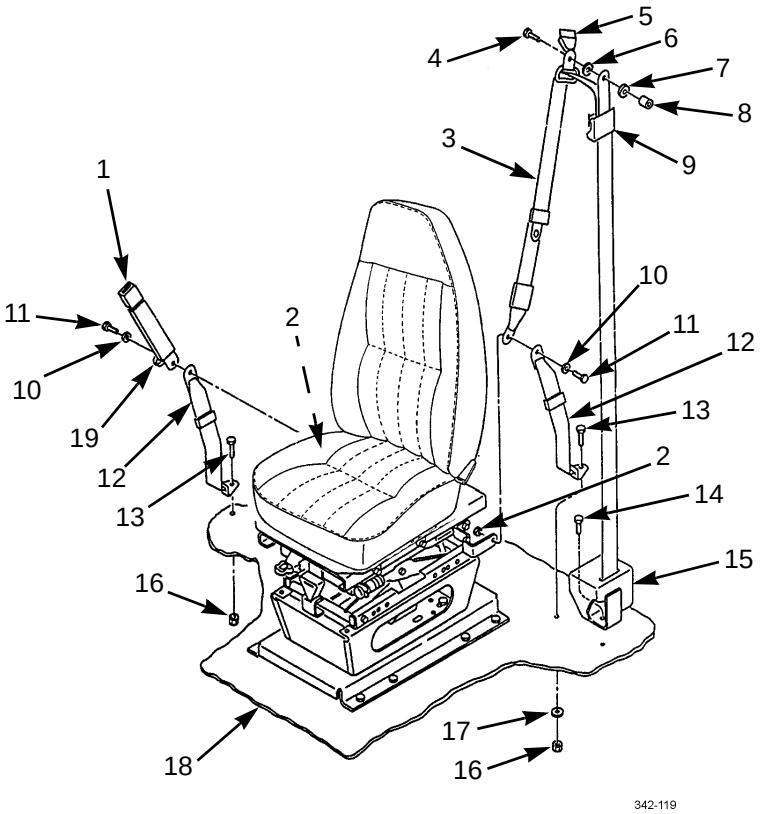

INSTALLATION

1. Install bushing (8), washer (7), lock (9), washer (6), seat belt (3), and screw (4). Close cover (5).
2. Connect seat belt (3) and install screw (14) in floor (18).
3. Close cover (15).
4. Connect seat belt (3) and install lock belt (1), tether belts (12), new lockwashers (10), screws (11), and new locknuts (2).
5. Close cover (19). Install two screws (13), washer (17), and two new locknuts (16).

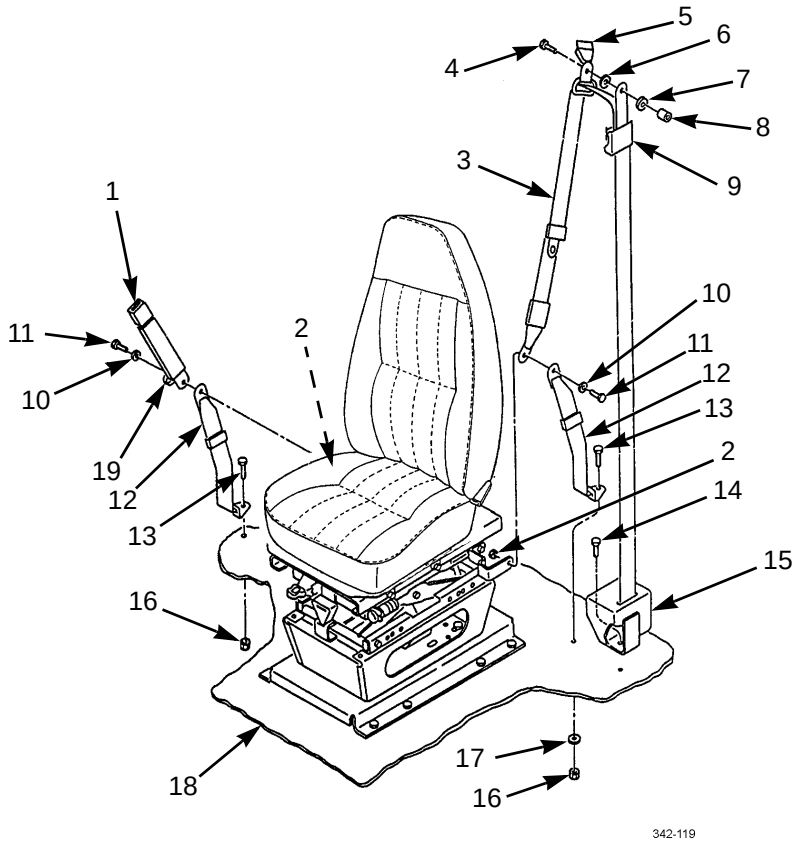

END OF WORK PACKAGE

FRONT SPLASH GUARD AND FENDER EXTENSION MAINTENANCE 0252 00

THIS WORK PACKAGE COVERS

Removal, Disassembly, Assembly, Installation

INITIAL SETUP

Tools and Special Tools

Tool kit, general mechanic's (Item 50, WP 0306 00)

Personnel Required

Two

Materials/Parts

Nut, lock (P/N M45913/1-8CG5C) (8)

Materials/Parts - Continued

Nut, lock (P/N M45913/1-5CG5C) (9)

Nut, lock (P/N M45913/1-6CG5C) (3)

Equipment Condition

Side marker/turn signal light removed (WP 0103 00 or WP 0104 00)

REMOVAL

WARNING

Front fender extension and splash guard are heavy and awkward to handle. Use assistance when removing these items. Failure to follow this warning may result in injury to personnel.

NOTE

Procedures for right- and left-side fender extensions are the same.

Remove four locknuts (1), eight washers (2), four bolts (3), and front fender extension (4) with splash guard (5) from vehicle. Discard locknuts.

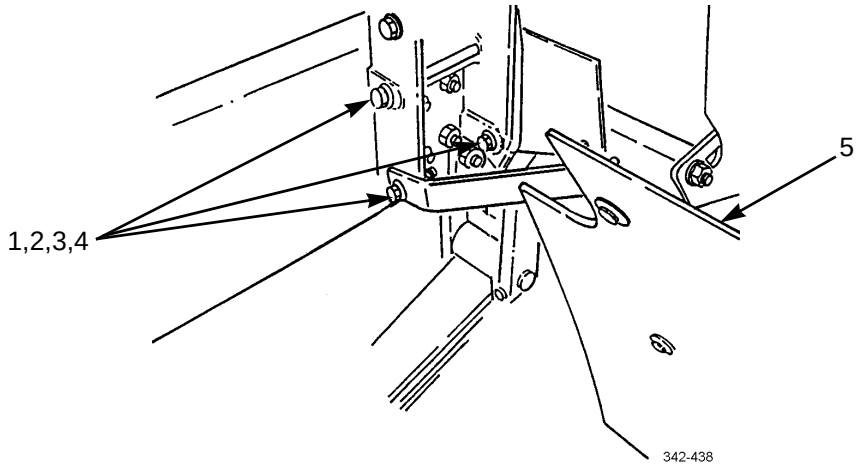

DISASSEMBLY

NOTE

Cap screws are different length as needed for use. Mark location of each during removal to aid during installation.

1. Remove four nuts (6), two locknuts (9), 12 washers (7), six cap screws (10), two braces (8), and splash guard (5). Discard locknuts.

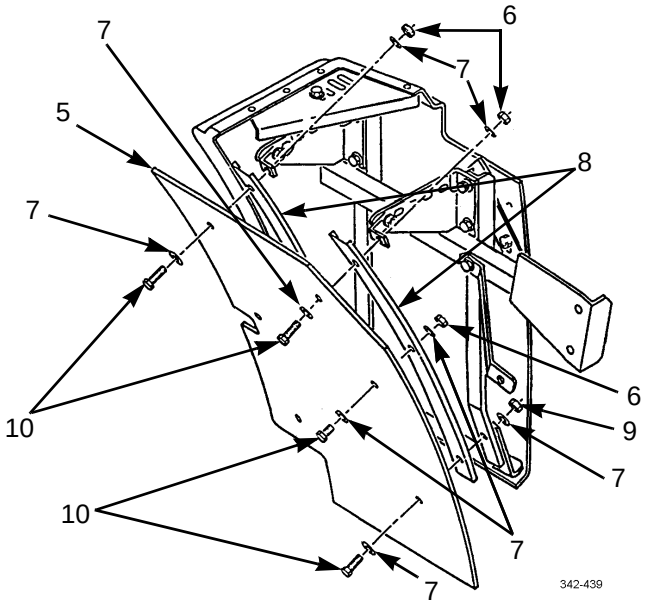

2. Remove four locknuts (13), washers (14), screws (11), washers (12), bracket (15), and front fender extension (4). Discard locknuts.

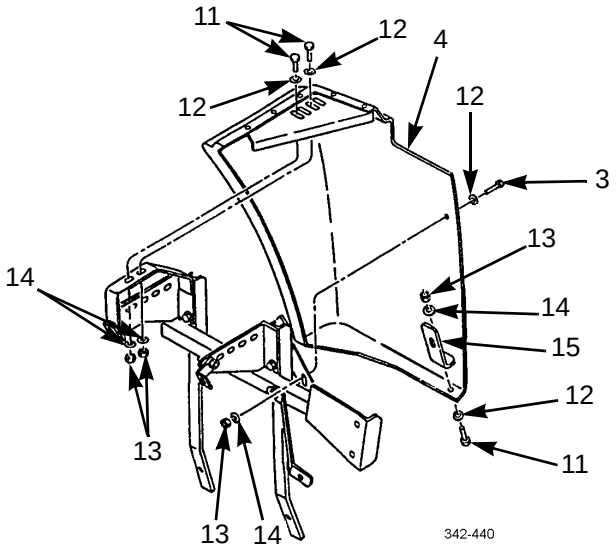

3. Remove two locknuts (16), four washers (19), two cap screws (29), and two brackets (30). Discard locknuts.

DISASSEMBLY - CONTINUED

4. Remove locknut (16), two washers (19), cap screw (20), and bracket (21). Discard locknut.

5. Remove locknut (16), two washers (19), cap screws (27), two brackets (26 and 28), and brace (24) from bracket (25). Discard locknuts.

6. Remove locknut (16), two washers (19), cap screw (18), bracket (23), brace (22), and bracket (17) from bracket (25). Discard locknuts.

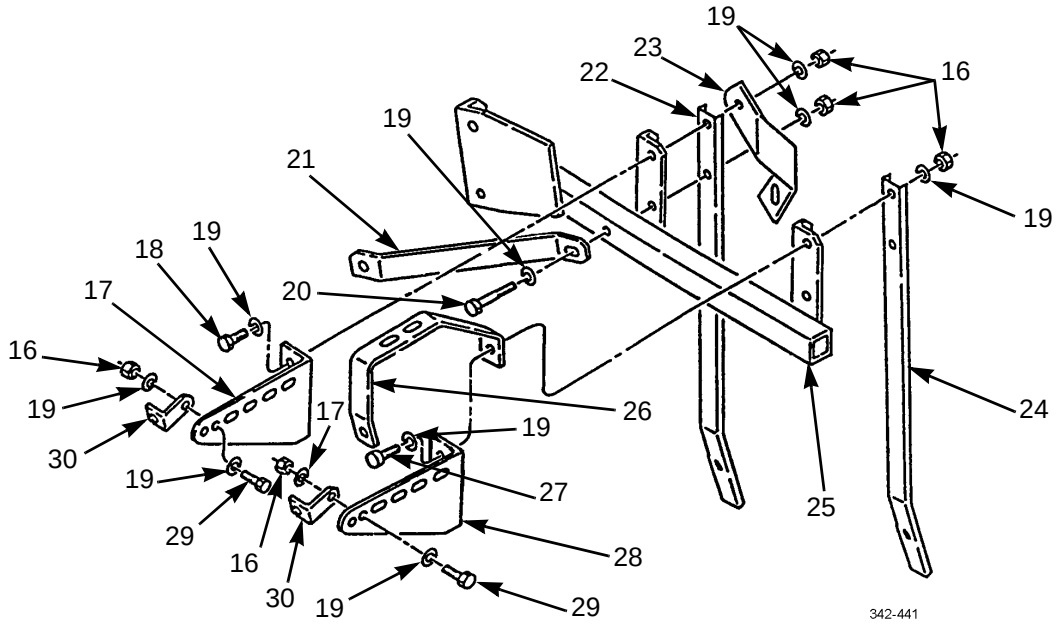

ASSEMBLY

1. Install bracket (17), bracket (22), and bracket (23) on bracket (25). Secure in place with screw (18), two washers (19), and new locknut (16).

2. Install brace (24) and brackets (26 and 28) on bracket (25). Secure in place with cap screw (27), two washers (19), and new locknut (16).

3. Install bracket (21) on bracket (25) with screw (20), two washers (19), and new locknut (16).

4. Install bracket (30) on each bracket (17 and 28). Secure with cap screw (29), two washers (19), and new locknut (16).

5. Attach bracket (15) to front fender extension (4) and secure with screw (11), two washers (12 and 14), and new locknut (13).

6. Attach front fender extension (4) to brackets (23 and 26) and secure in place with three screws (11), washers (12), washers (14), and new locknuts (13).

7. Install splash guard (5) and two braces (8) to fender extension and bracket assembly with six cap screws (10), 12 washers (7), four nuts (6), and two new locknuts (9).

INSTALLATION

WARNING

Front fender extension and splash guard are heavy and awkward to handle. Use assistance when installing these items. Failure to follow this warning may result in injury to personnel.

1. Position front fender splash guard (5) and fender extension (4) on vehicle and secure in place with four bolts (3), eight washers (2), and four new locknuts (1).

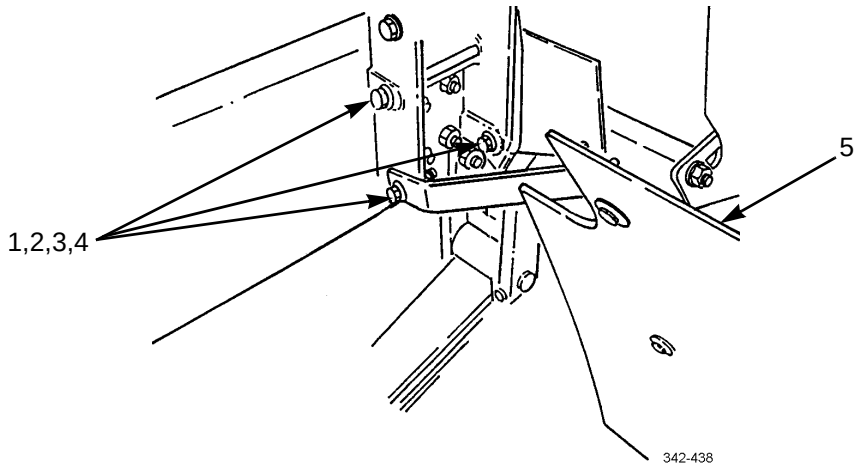

2. Install side marker/turn signal light (WP 0103 00 or WP 0104 00).

END OF WORK PACKAGE

REAR FENDER REPLACEMENT 0253 00

THIS WORK PACKAGE COVERS

Removal, Installation

INITIAL SETUP

Tools and Special Tools

Tool kit, general mechanic's (Item 50, WP 0306 00)

Wrench, torque, 50-250 lb-ft (Item 58, WP 0306 00)

NOTE

Right and left fenders are replaced the same way. Right rear fender is illustrated.

REMOVAL

Remove nut (1), washer (2), bolt (4), and rear fender (3) from vehicle.

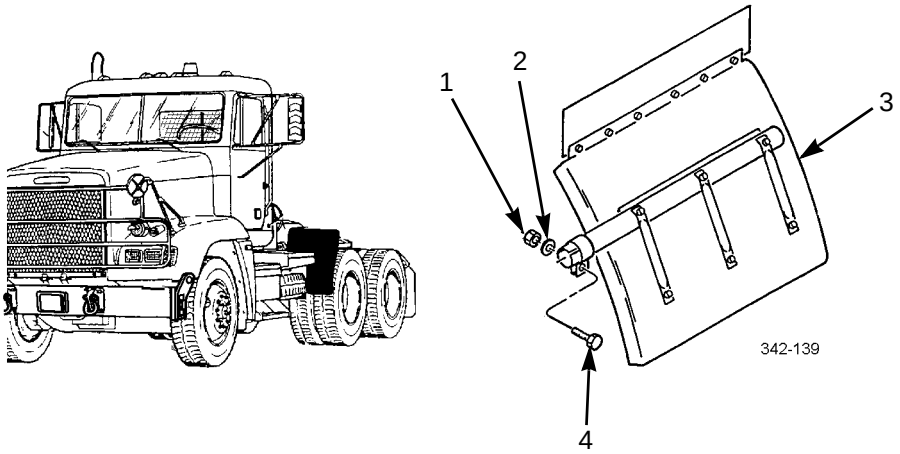

INSTALLATION

Install rear fender (3) on vehicle with bolt (4), washer (2), and nut (1). Tighten nut to 200 lb-ft (271 Nm).

END OF WORK PACKAGE

MUD FLAP ASSEMBLY REPLACEMENT (M915A3, M916A3) 0254 00

THIS WORK PACKAGE COVERS

Removal, Installation

INITIAL SETUP

Tools and Special Tools

Tool kit, general mechanic's (Item 50, WP 0306 00)

Materials/Parts

Nut, lock (P/N M45913/1-8CG5C) (4)

Pin, cotter (P/N MS24665-621)

REMOVAL

1. Remove cotter pin (3) and mud flap hanger (2) from rear mounting bracket assembly (4). Discard cotter pin.
2. Remove four locknuts (8), bolts (7), mud flap (6), and reflective tape bracket (5) from mud flap hanger (2). Discard locknuts.
3. Remove four clamps (1) from mud flap hanger (2).

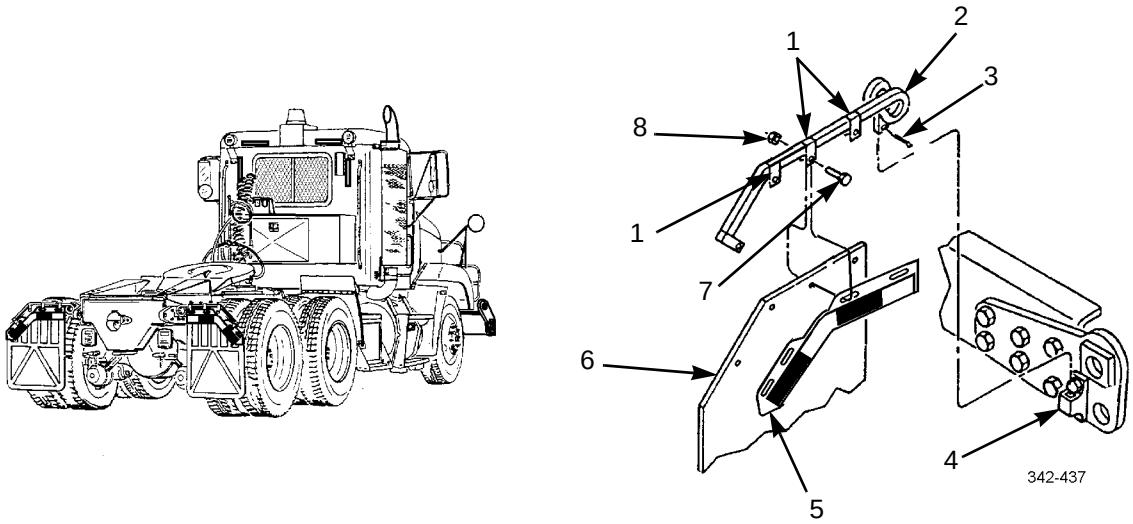

INSTALLATION

1. Install four clamps (1) on mud flap hanger (2).
2. Position reflective tape bracket (5) on mud flap (6) and install mud flap on mud flap hanger (2) with four bolts (7) and new locknuts (8).
3. Install mud flap hanger (2) on rear mounting bracket assembly (4) with new cotter pin (3).

END OF WORK PACKAGE

PERSONAL GEAR STORAGE BOX AND MOUNTING BRACKET REPLACEMENT (M915A3) 0255 00

THIS WORK PACKAGE COVERS

Removal, Installation

INITIAL SETUP

Tools and Special Tools

Tool kit, general mechanic's (Item 50, WP 0306 00)

Materials/Parts

Compound, caulking (Item 10, WP 0305 00)

Nut, lock (P/N M45913/1-6CG5C) (4)

Nut, lock (P/N M45913/1-10CG5C) (7)

References

TM 9-2320-302-10

Personnel Required

Two

Equipment Condition

Basic Issue Items (BII) storage box removed (WP 0257 00)

Spare wheel hoist removed (WP 0227 00)

REMOVAL

1. Remove two locknuts (2), washers (3), and clamps (4) securing air tubes (5) and harnesses (1). Discard locknuts.

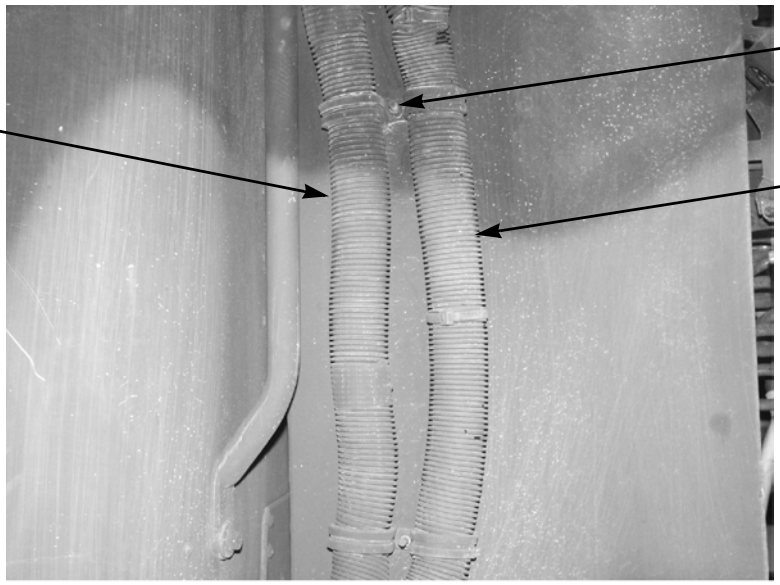

371-348

PERSONAL GEAR STORAGE BOX AND MOUNTING BRACKET REPLACEMENT (M915A3) - CONTINUED 0255 00

REMOVAL - CONTINUED

2. Remove two air hoses from gladhand/electrical cable bracket (TM 9-2320-302-10).
3. Disconnect air hose lanyard from beacon light bracket (TM 9-2320-302-10).
4. Remove four nuts (6) and washers (7) from bracket (8).
5. Remove bracket (8) with air lines and electrical harnesses attached and lay aside.

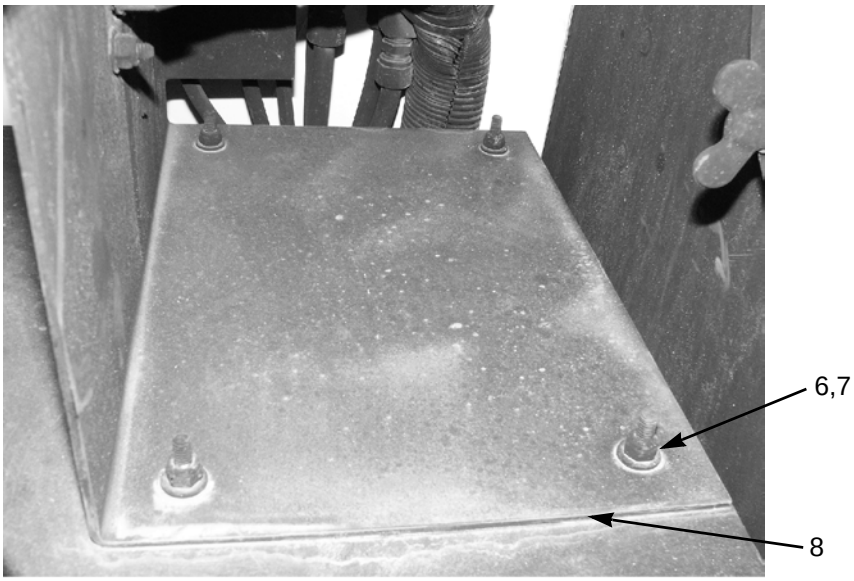

6. Remove two screws (10), four locknuts (14), screws (12), washers (13), and personal gear storage box (11) from mounting bracket (9). Discard locknuts.

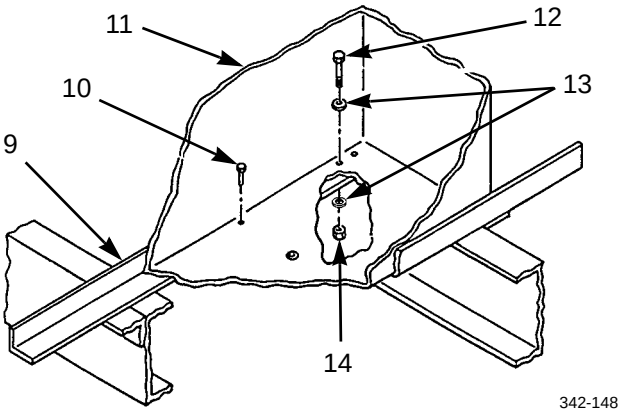

REMOVAL - CONTINUED

7. Remove seven locknuts (15), washers (16), screws (18), washers (19), and mounting bracket (9) from frame (17). Discard locknuts.

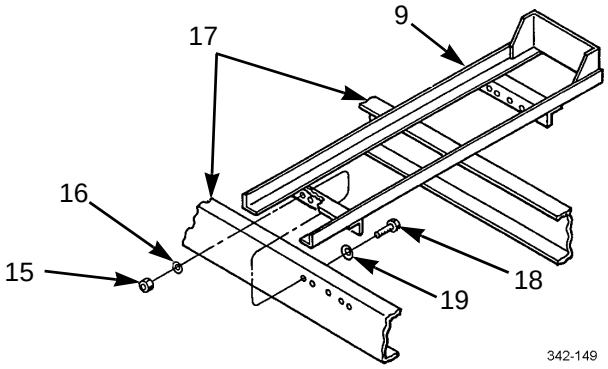

8. Remove drain (20) from personal gear storage box (11).

9. Remove three bolts (23), six washers (22), three nuts (24), and gladhand/electrical cable bracket (21) from personal gear storage box (11).

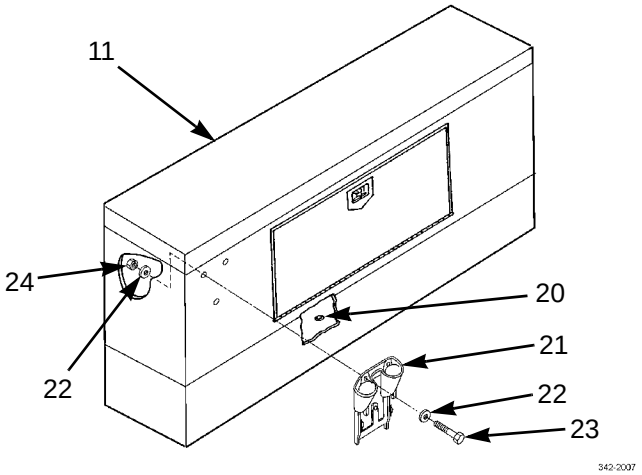

INSTALLATION

1. Install gladhand/electrical cable bracket (21) with three bolts (23), six washers (22), and three nuts (24).

2. Install mounting bracket (9) on frame (17) with seven washers (19), screws (18), washers (16), and new locknuts (15).

3. Install drain (20) in personal gear storage box (11).

4. Apply caulking compound to bottom of four washers (13). Install personal gear storage box (11), four washers, screws (12), new locknuts (14), and two screws (10) in mounting bracket (9).

INSTALLATION - CONTINUED

5. Secure air tubes (5) and harness (1) with clamps (4), washers (3), and two new locknuts (2).

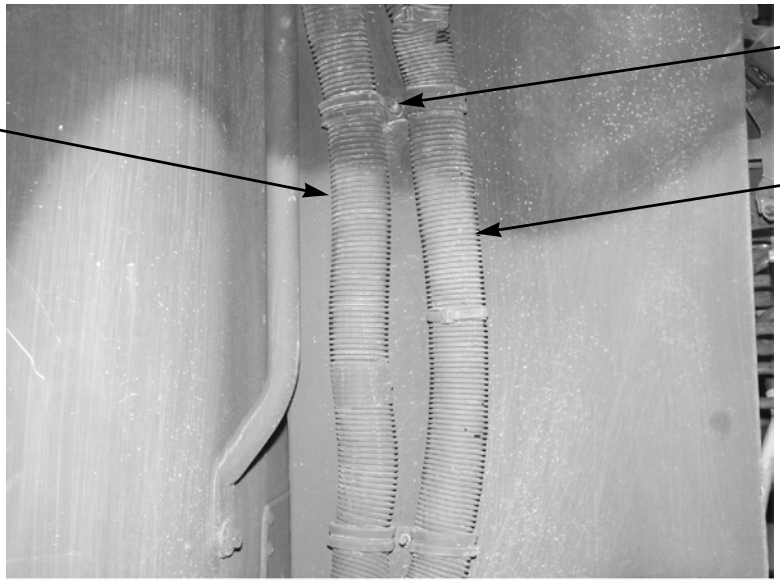

371-348

6. Install bracket (8) with air lines and electrical harnesses attached with washers (7) and four nuts (6).

371-347

7. Connect air hose lanyard to beacon light bracket (TM 9-2320-302-10).
8. Attach two air hoses to gladhand/electrical cable bracket (TM 9-2320-302-10).
9. Install spare wheel hoist (WP 0227 00).
10. Install Basic Issue Items (BII) storage box (WP 0257 00).

END OF WORK PACKAGE

PERSONAL GEAR STORAGE BOX AND MOUNTING BRACKET REPLACEMENT (M916A3) 0256 00

THIS WORK PACKAGE COVERS

Removal, Installation

INITIAL SETUP

Tools and Special Tools

Tool kit, general mechanic's (Item 50, WP 0306 00)

Materials/Parts

Compound, caulking (Item 10, WP 0305 00)

Personnel Required

Two

Equipment Condition

Basic Issue Items (BII) storage box removed (WP 0258 00)

Air dryer removed (WP 0199 00)

REMOVAL

1. Remove eight screws (2), washers (3), and personal gear storage box (1) from mounting bracket (5).
2. Remove four locknuts (6), washers (7), mounting bracket (5), four screws (8), and washers (9), from frame (10). Discard locknuts.
3. Remove drain (11) and door seal (4) from personal gear storage box (1).

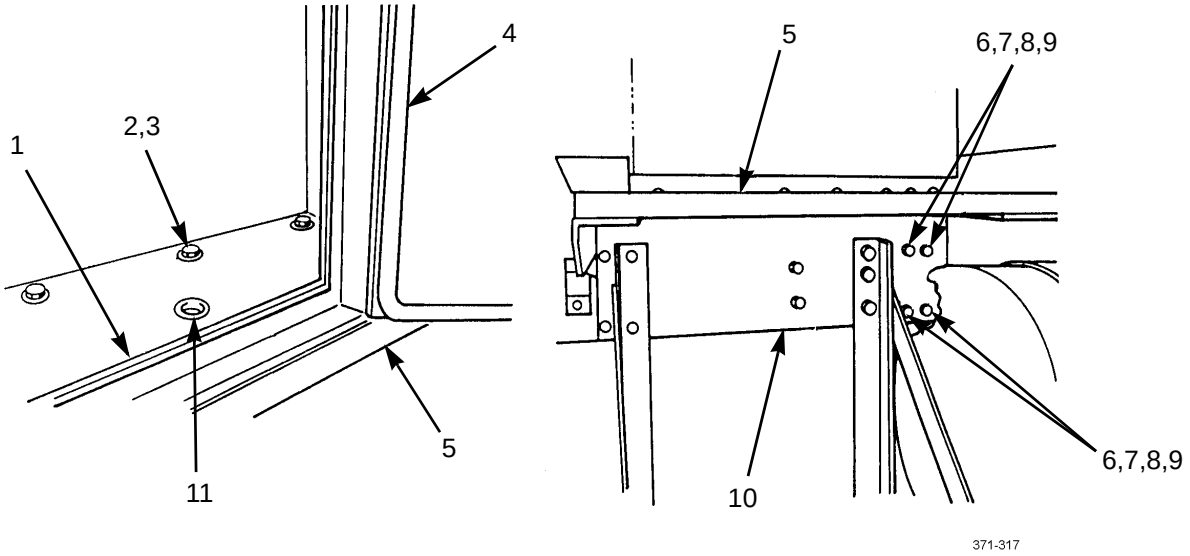

INSTALLATION

1. Install drain (11) and new door seal (4) in personal gear storage box (1).
2. Install four washers (9), four screws (8), mounting bracket (5), four washers (7), and four new locknuts (6) on frame (10).
3. Apply caulking compound to bottom of eight washers (3) and install personal gear storage box (1), eight washers (3), and screws (2) in mounting bracket (5).

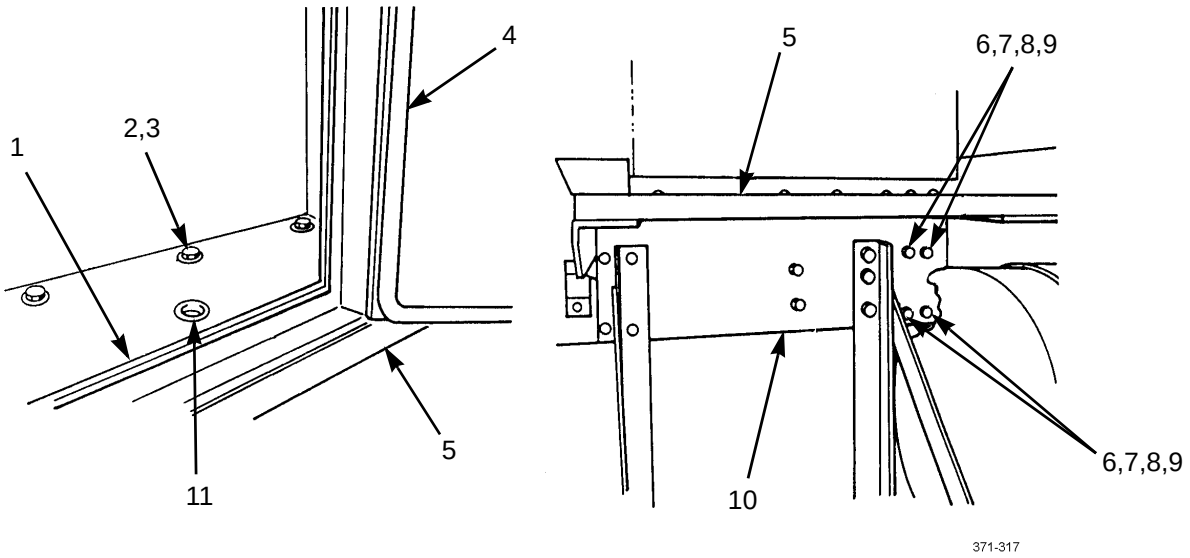

4. Install air dryer (WP 0199 00).
5. Install Basic Issue Items (BII) storage box (WP 0258 00).

END OF WORK PACKAGE

BASIC ISSUE ITEMS (BII) STORAGE BOX AND MOUNTING BRACKET REPLACEMENT (M915A3, M917A2) 0257 00

THIS WORK PACKAGE COVERS

Removal, Installation

INITIAL SETUP

Tools and Special Tools

Tool kit, general mechanic's (Item 50, WP 0306 00)

Materials/Parts

Compound, caulking (Item 10, WP 0305 00)

Personnel Required

Two

Equipment Condition

Decontamination kit removed (M917A2) (TM 9-2320-302-10)

Right rear step removed (WP 0225 00)

Air supply tank removed (M915A3) (WP 0186 00)

REMOVAL

1. Open tool storage box (3). Remove six nuts (6), six screws (4), six washers (5), and tool storage box from two mounting brackets (1 and 2).

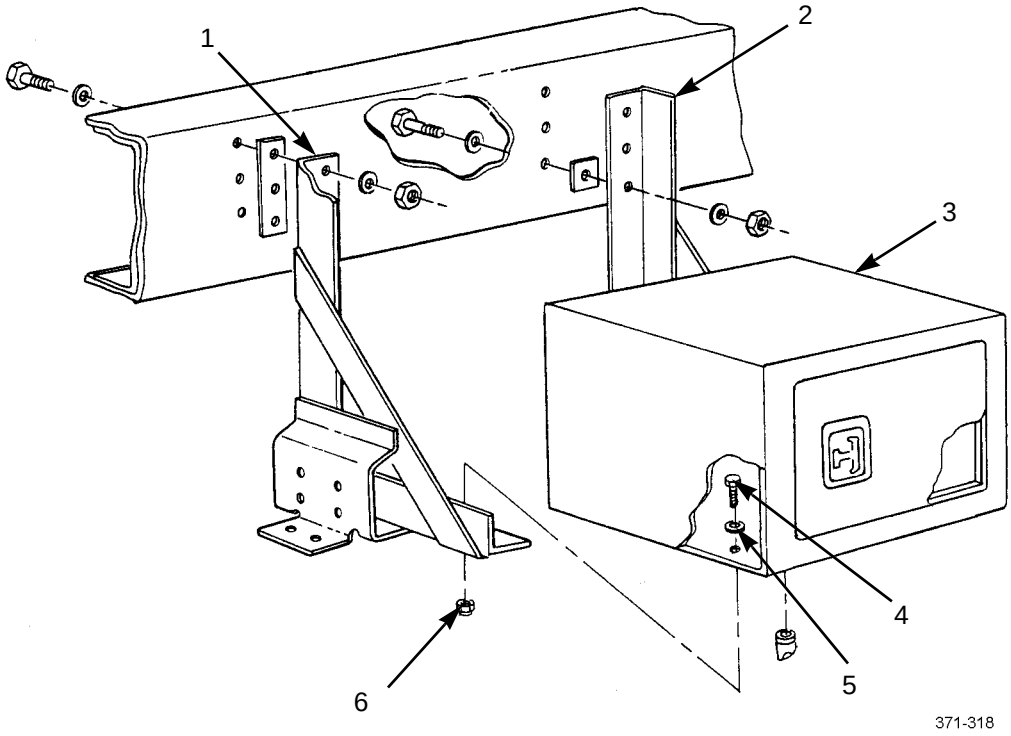

BASIC ISSUE ITEMS (BII) STORAGE BOX AND MOUNTING BRACKET REPLACEMENT (M915A3, M917A2) - CONTINUED

0257 00

REMOVAL - CONTINUED

NOTE

Perform step 2 to remove left-hand mounting bracket.

2. Remove three nuts (19), three screws (7), six washers (8), mounting bracket (1), and spacer (9) (if equipped) from frame (10).

NOTE

- Perform step 3 to remove right-hand mounting bracket.
- Note position of screws for installation.

3. Remove three nuts (14), three screws (11), six washers (12), mounting bracket (2), and spacer (13) (if equipped) from frame (10).
4. Remove drain (18) and door seal (16) from tool storage box (3).

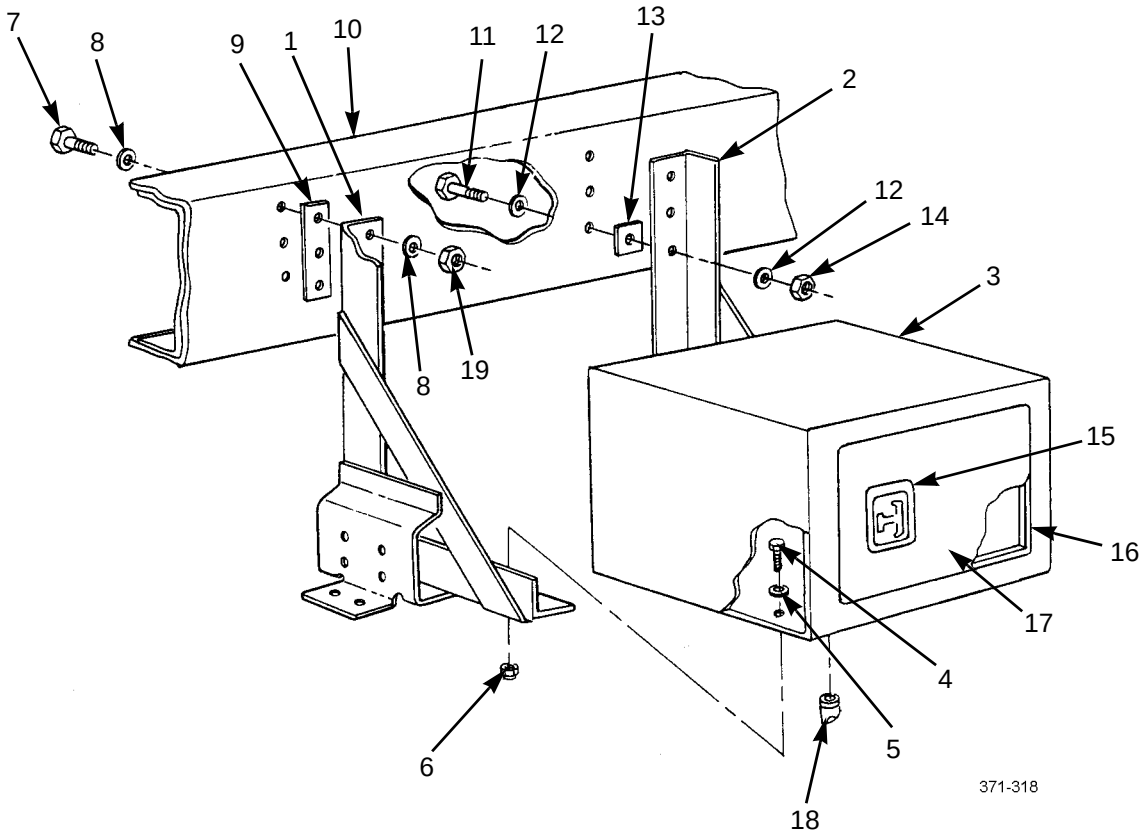

INSTALLATION

1. Install drain (18) and new door seal (16) in tool storage box (3).

NOTE

Perform step 3 to install right-hand mounting bracket.

2. Install spacer (13) (if equipped), mounting bracket (2), six washers (12), three screws (11), and three nuts (14) to frame (10).

NOTE

Perform step 4 to install left-hand mounting bracket.

3. Install spacer (9) (if equipped), mounting bracket (1), six washers (8), three screws (7), and three nuts (6) to frame (10).
4. Apply caulking compound to bottom of six washers (5) and install tool storage box (3), six washers, six screws (4), and six nuts (6) to mounting brackets (1 and 2).
5. Close door (17).
6. Install air supply tank (M915A3) (WP 0186 00).
7. Install right rear step (WP 0225 00).
8. Install decontamination kit (M917A2) (TM 9-2320-302-10).

END OF WORK PACKAGE

BASIC ISSUE ITEMS (BII) STORAGE BOX AND MOUNTING BRACKET REPLACEMENT (M916A3) 0258 00

THIS WORK PACKAGE COVERS

Removal, Installation

INITIAL SETUP

Tools and Special Tools

Tool kit, general mechanic's (Item 50, WP 0306 00)

Materials/Parts

Compound, caulking (Item 10, WP 0305 00)

Personnel Required

Two

Equipment Condition

Right rear step removed (WP 0225 00)

Air dryer removed (WP 0199 00)

REMOVAL

1. Remove six screws (1), washers (2), and storage box (4) from two mounting brackets (3).

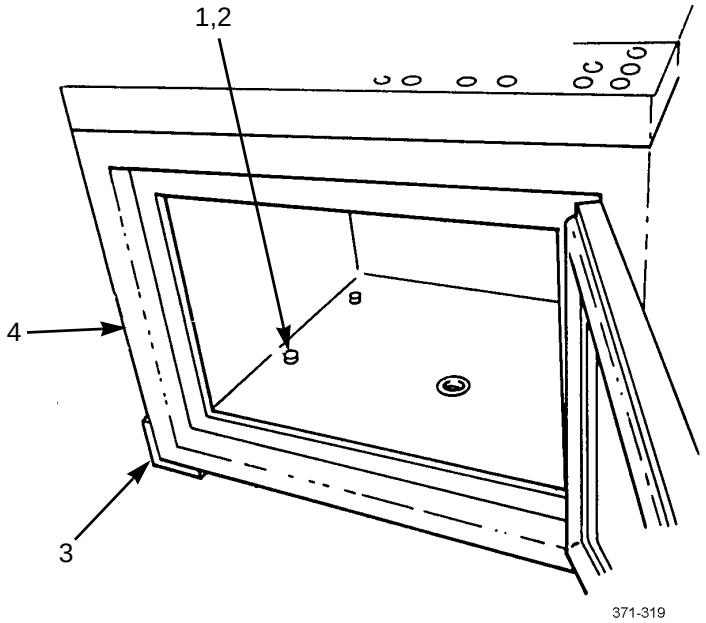

BASIC ISSUE ITEMS (BII) STORAGE BOX AND MOUNTING BRACKET REPLACEMENT (M916A3) - CONTINUED 0258 00

REMOVAL - CONTINUED

2. Remove nut (6), washer (7), screw (8), and washer (9) from frame rail (5) and standoff bracket (10).

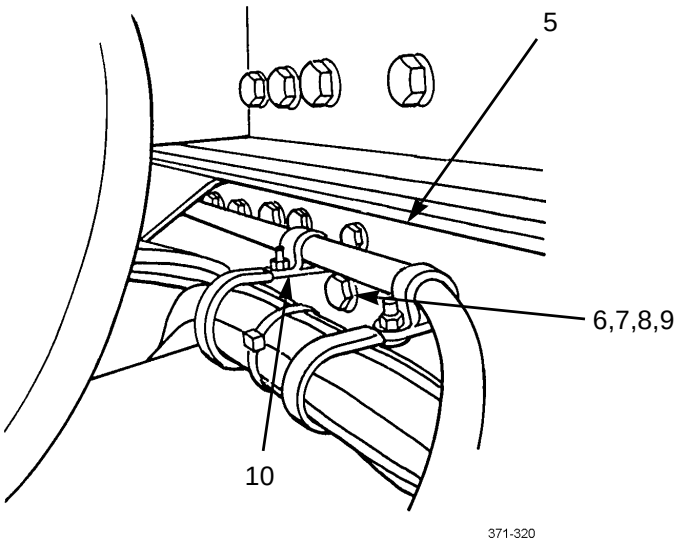

3. Remove four nuts (11), washers (12), two mounting brackets (3), four screws (13), washers (14), and spacers (15) (if equipped) from frame rail (5).

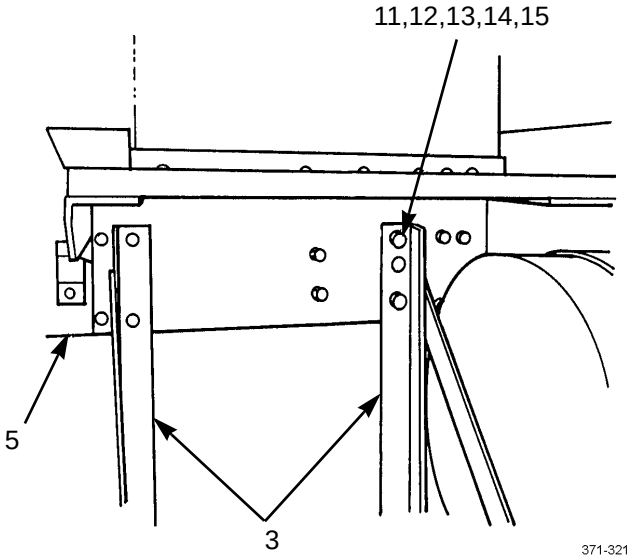

BASIC ISSUE ITEMS (BII) STORAGE BOX AND MOUNTING BRACKET REPLACEMENT (M916A3) - CONTINUED 0258 00

REMOVAL - CONTINUED

4. Remove drain (17) and, if damaged, door seal (16) from storage box (4).

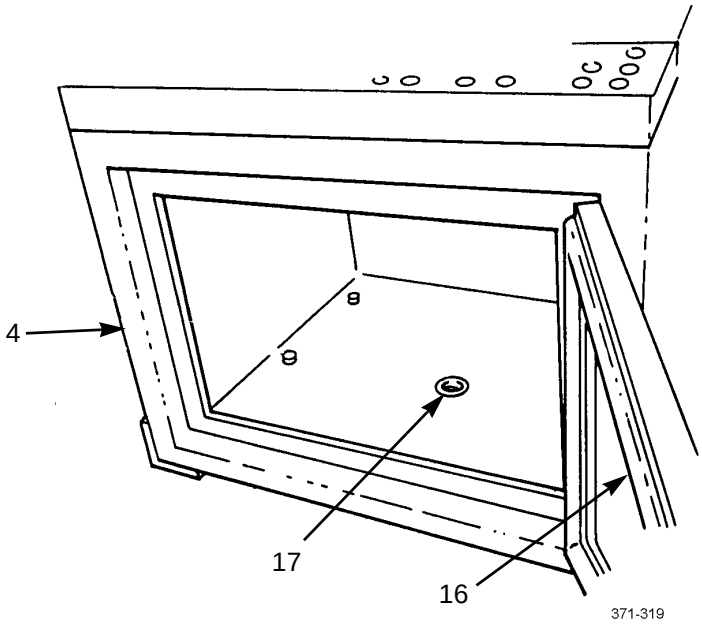

INSTALLATION

1. Install drain (17) and, if removed, new door seal (16) in storage box (4).
2. Install four spacers (15) (if equipped), washers (14), screws (13), two mounting brackets (3), four washers (12), and nuts (11) on frame rail (5).
3. Install washer (9). Install screw (8) thru standoff bracket (10) and frame rail (5).
4. Install washer (7) and nut (6).

INSTALLATION - CONTINUED

5. Apply caulking compound to bottom of six washers (1) and install storage box (4), six washers (1) and screws (2) in two mounting brackets (3).

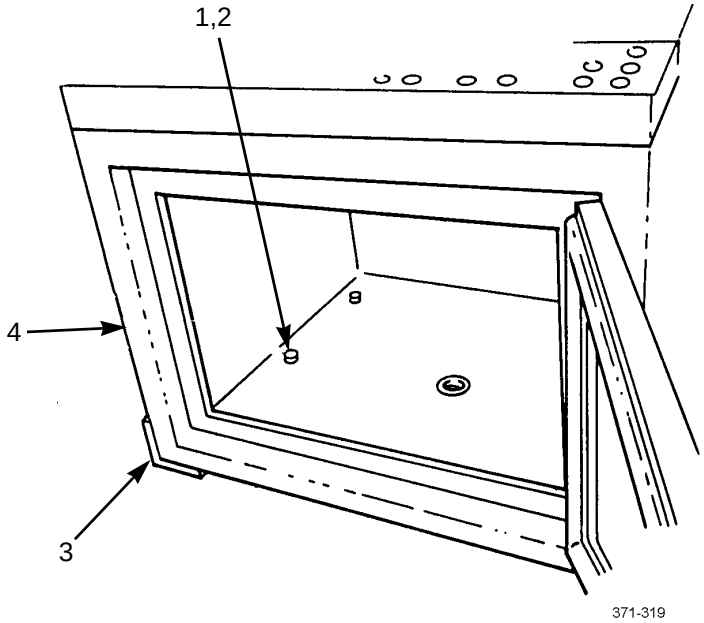

6. Install right rear step (WP 0225 00).
7. Install air dryer (WP 0199 00).

END OF WORK PACKAGE

STORAGE BOX LATCH REPLACEMENT 0259 00

THIS WORK PACKAGE COVERS

Removal, Installation

INITIAL SETUP

Tools and Special Tools

Tool kit, general mechanic's (Item 50, WP 0306 00)

Materials/Parts

Compound, caulking (Item 10, WP 0305 00)

Nut, lock (P/N M45913/1-4CG5C) (4)

REMOVAL

1. Remove caulking compound from nuts (4) and circumference of latch (3).
2. Remove four locknuts (4), washers (1), and latch (3) from storage box door (2). Discard locknuts.

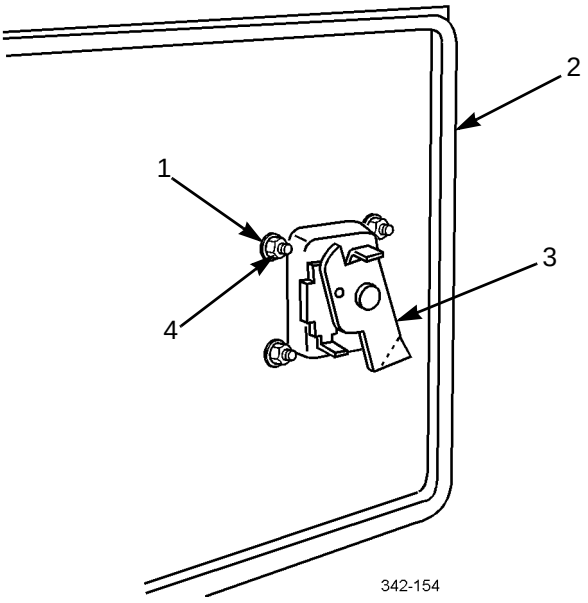

INSTALLATION

1. Install latch (3) on storage box door (2) with four washers (1), and new locknuts (4).
2. Apply a bead of caulking compound to circumference of latch (3).
3. Cover locknuts (4) and threads with caulking compound.

END OF WORK PACKAGE

GRABHANDLE REPLACEMENT 0260 00

THIS WORK PACKAGE COVERS

Inside Cab Grabhandle Replacement; Outside Cab Grabhandle Replacement

INITIAL SETUP

Tools and Special Tools

Tool kit, general mechanic's (Item 50, WP 0306 00)

Materials/Parts

Washer, lock (P/N MS35338-141) (2)

References

WP 0265 00

INSIDE CAB GRABHANDLE REPLACEMENT

1. Remove cab overhead storage compartment (WP 0265 00).
2. Remove two screws (1) and grabhandle (2) from inside of cab (3).

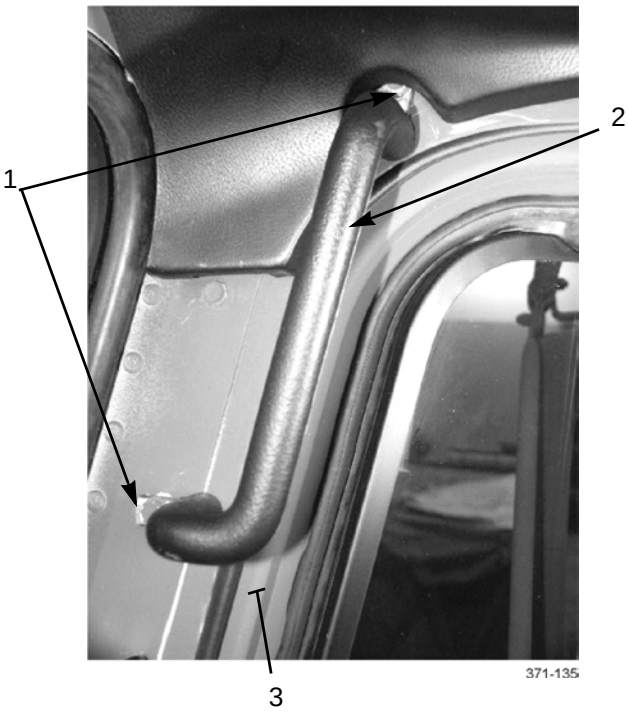

3. Install grabhandle (2) to inside of cab (3) with two screws (1).
4. Install cab overhead storage compartment (WP 0265 00).

OUTSIDE CAB GRABHANDLE REPLACEMENT

NOTE

Perform following steps to replace each of four grabhandles on outside of cab. Grabhandle mounted to muffler is shown.

1. Remove two screws (4) lockwashers (5), washers (6) and grabhandle (7) from muffler (8). Discard lockwashers.

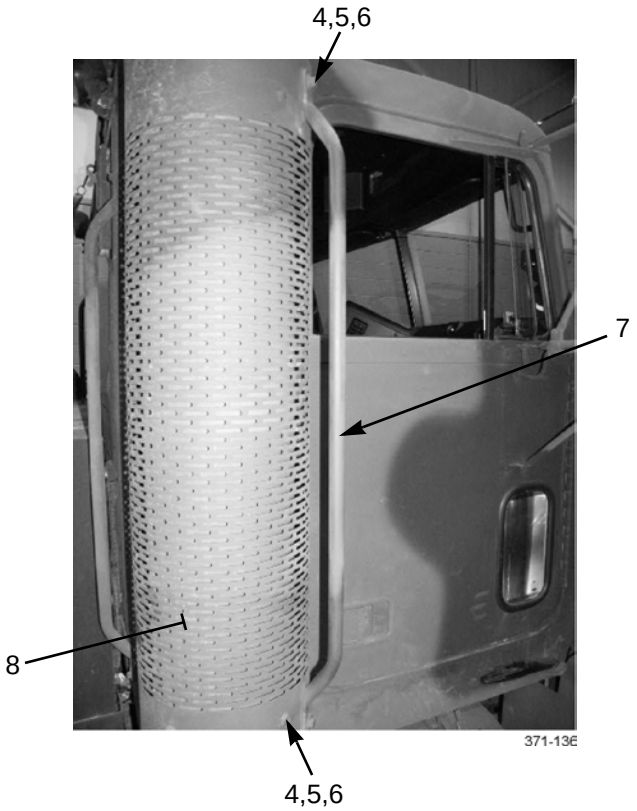

2. Install grabhandle (7) to muffler (8) with two washers (6), new lockwashers (5) and screws (4).

END OF WORK PACKAGE

REAR PLATFORM REPLACEMENT (M915A3) 0261 00

THIS WORK PACKAGE COVERS

Removal, Installation

INITIAL SETUP

Tools and Special Tools

Tool kit, general mechanic's (Item 50, WP 0306 00)

REMOVAL

1. At top of rear platform (3), loosen, but do not remove, locknut (2) on each of four clip (1) assemblies.

NOTE

- Clip assembly at left-front corner of rear platform will be removed when rear platform is removed.
- Rotate each clip assembly 90 degrees to free clip assembly from rear platform as clip assemblies are removed.

2. Slide three clip (1) assemblies away from frame (4) and remove three clip assemblies from vehicle.
3. Lift rear platform (3) from frame (4) and remove rear platform and one remaining clip (1) assembly from vehicle.

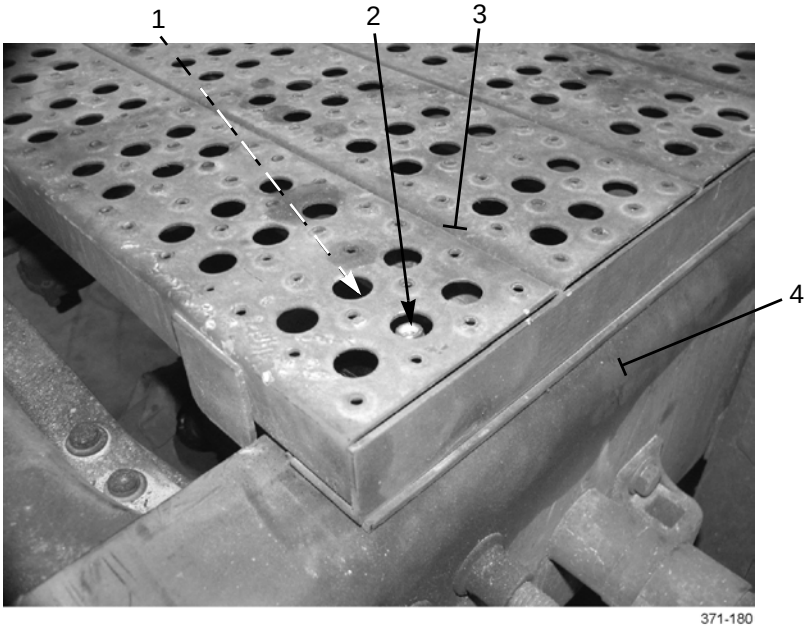

REMOVAL - CONTINUED

NOTE

Perform step 4 for each of four clip assemblies.

4. Remove locknut (2) and clip (1) from bracket (5).

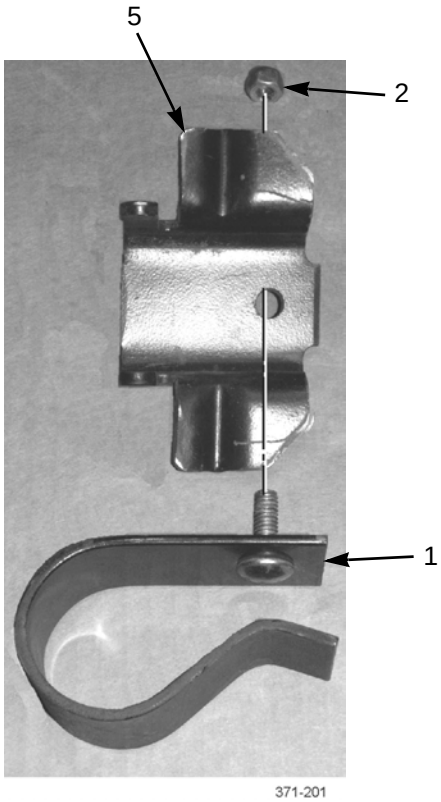

INSTALLATION

NOTE

Perform step 1 for each of four clip assemblies.

1. Install clip (1) to bracket (5) with locknut (2). Do not tighten locknut.
2. Position one clip (1) assembly to right-front corner of rear platform (3) and position rear platform to frame (4) of vehicle.
3. Position remaining three clip (1) assemblies to frame (4) and rear platform (3).
4. Tighten each of four locknuts (2).

INSTALLATION - CONTINUED

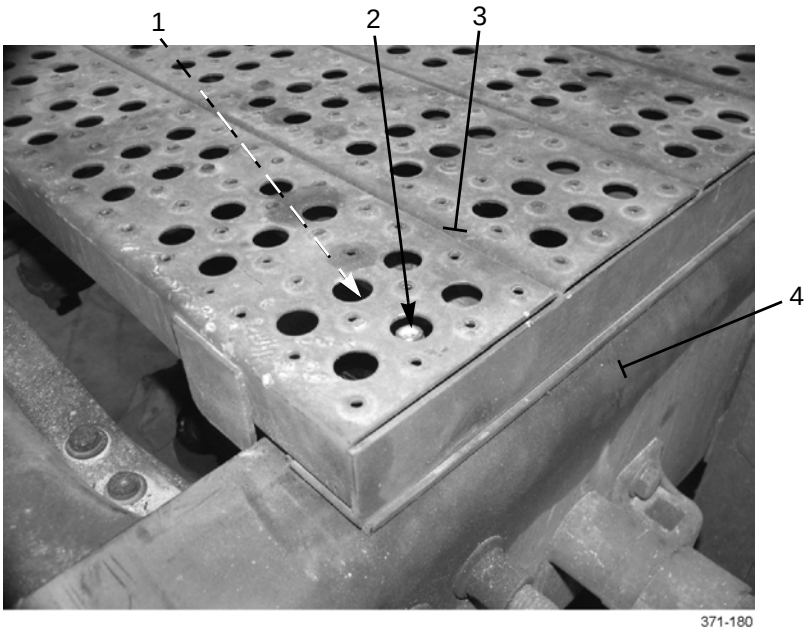

END OF WORK PACKAGE

CHASSIS GUARD SCREEN REPLACEMENT (M916A3) 0262 00

THIS WORK PACKAGE COVERS

Removal, Installation

INITIAL SETUP

Tools and Special Tools

Tool kit, general mechanic's (Item 50, WP 0306 00)

REMOVAL

1. At forward end of guard screen (4), remove three bolts (5), six washers (2), three nuts (3), and three bridge clamps (1).
2. At rear end of guard screen (4), remove two nuts (3), two washers (2), and two bridge clamps (1).
3. Remove guard screen (4) and two support struts (6).

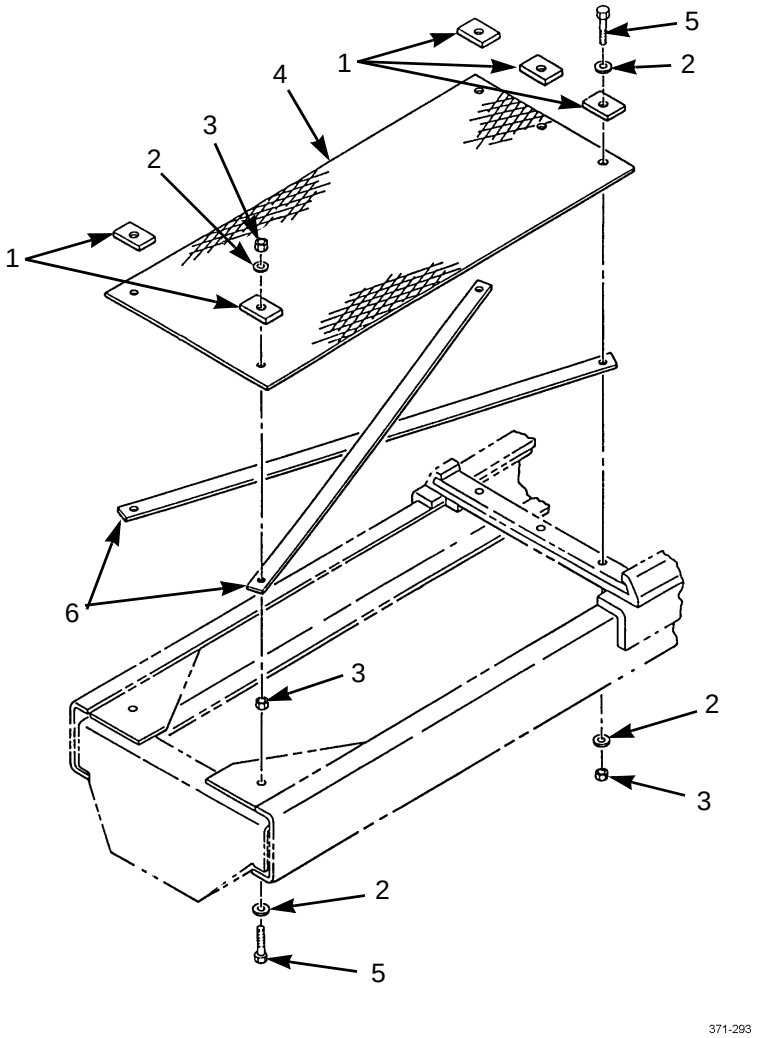

INSTALLATION

1. Position two support struts (6) diagonally on frame.
2. Position guard screen (4) on support struts (6).
3. At rear end of guard screen (4), position two bridge clamps (1) and install two washers (2) and two nuts (3).
4. At forward end of guard screen (4), position three bridge clamps (1) and install three bolts (5), six washers (2), and three locknuts (3).

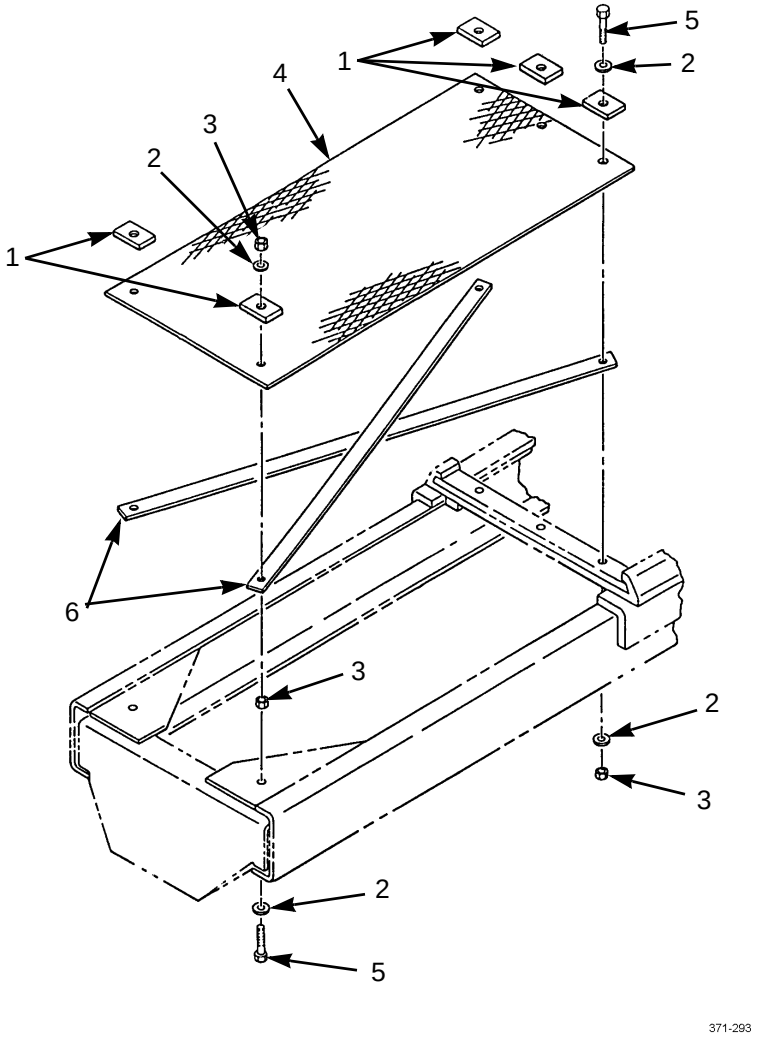

END OF WORK PACKAGE

FLOOR MATS REPLACEMENT 0263 00

THIS WORK PACKAGE COVERS

Removal, Installation

INITIAL SETUP

Tools and Special Tools

Tool kit, general mechanic's (Item 50, WP 0306 00)

Wrench set, socket attachment (Item 61, WP 0306 00)

Equipment Condition

Seats removed (WP 0249 00)

Seat belt tether belts removed (WP 0251 00)

Equipment Condition - Continued

ABS ECU cover removed (WP 0126 00)

Shift tower removed (WP 0152 00 or WP 0153 00)

Fire extinguisher bracket removed (WP 0268 00)

Radio bracket removed (if installed)

REMOVAL

1. Remove nine screws (1), two treadplates (2), floor mats (3), and insulation pads (4) from cab.
2. Remove 10 torx screws (5), washers (6), and floor mat (7) from cab.

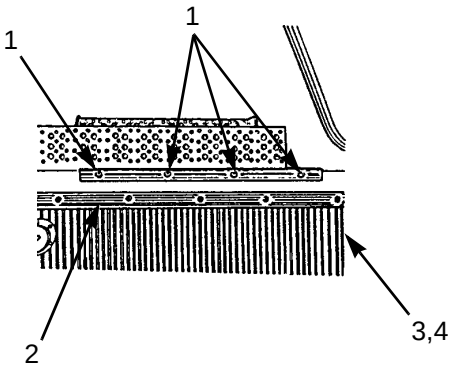

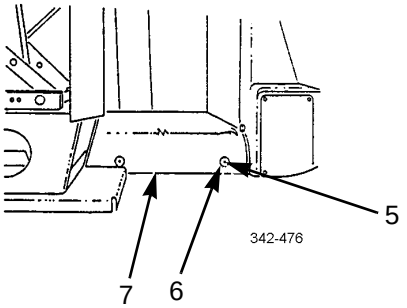

INSTALLATION

1. Install floor mat (7) with 10 washers (6) and torx screws (5).
2. Install two insulation pads (4), floor mats (3) and treadplates (2) on cab with nine screws (1).
3. Install seat belt tether belts (WP 0251 00).
4. Install radio bracket.
5. Install shift tower (WP 0152 00 or WP 0153 00).
6. Install fire extinguisher bracket (WP 0268 00).
7. Install seats (WP 0249 00).
8. Install ABS ECU cover (WP 0126 00).

END OF WORK PACKAGE

CAB AND HEAD LINERS REPLACEMENT 0264 00

THIS WORK PACKAGE COVERS

Removal, Installation

INITIAL SETUP

Tools and Special Tools

Tool kit, general mechanic's (Item 50, WP 0306 00)

Wrench set, socket attachment (Item 61, WP 0306 00)

Equipment Condition

Seat belts removed (WP 0251 00)

Equipment Condition - Continued

Transmission ECU and mounting plate removed (WP 0157 00)

M16 rifle mounting brackets removed (WP 0284 00 or WP 0285 00)

Interior lights removed (WP 0110 00)

REMOVAL

1. Empty contents of first aid kit (5).
2. Remove two screws (6) and first aid kit (5) from cab wall.
3. Remove six screws (1) and clamps (2) from cab wall.
4. Remove 13 screws (3) and trim (4) from cab window.

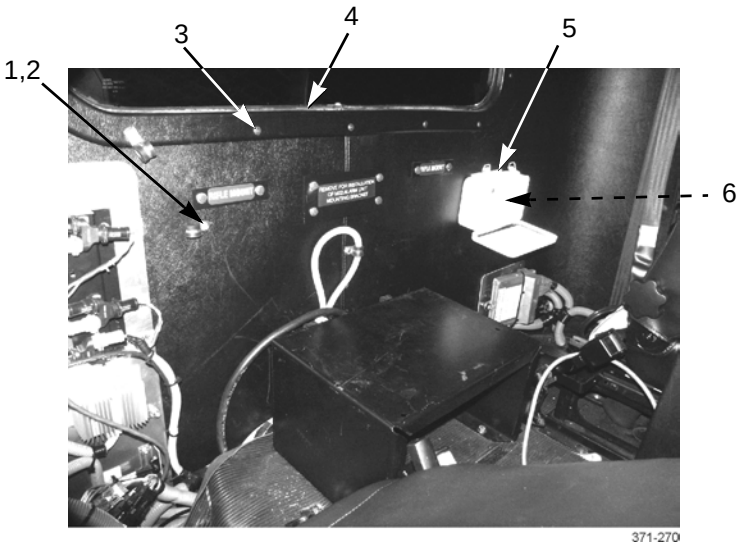

REMOVAL - CONTINUED

5. Remove two screws (9), washers (10), and cover (7) from mounting plate (8).

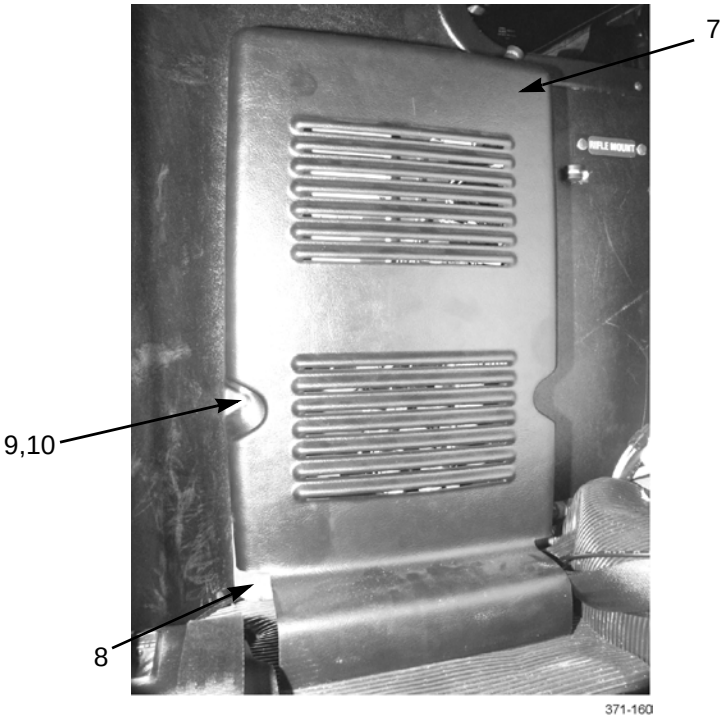

6. Leaving ECUs connected and attached to mounting plate (8), remove six screws (11) and mounting plate from cab wall.

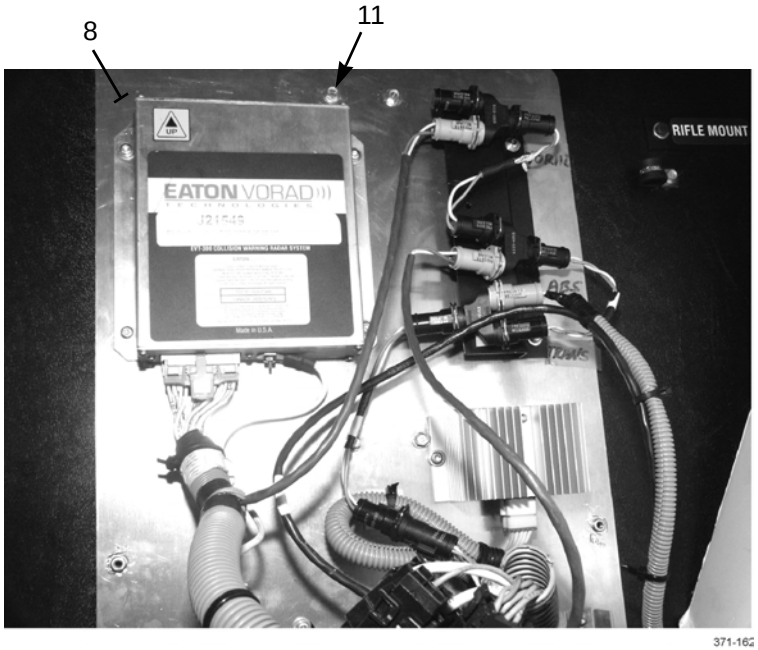

REMOVAL - CONTINUED

NOTE

Note overlap position of liner sections to aid in installation.

7. Remove screws (14), two head liners (13), and two cab liners (12) from cab.

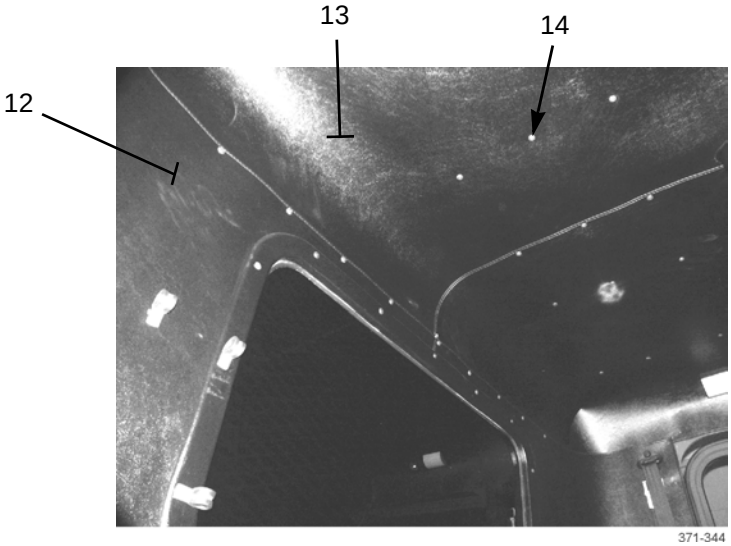

INSTALLATION

1. Position two cab liners (12), two head liners (13), and install screws (14).
2. Position trim (4) around cab window and install 13 screws (3).
3. Position mounting plate (8) with ECUs attached and install six screws (11).
4. Install cover (7) with two washers (10) and screws (9).

INSTALLATION - CONTINUED

5. Install six clamps (2) and screws (1).
6. Install first aid kit (5) with two screws (6).
7. Return contents to first aid kit (5).

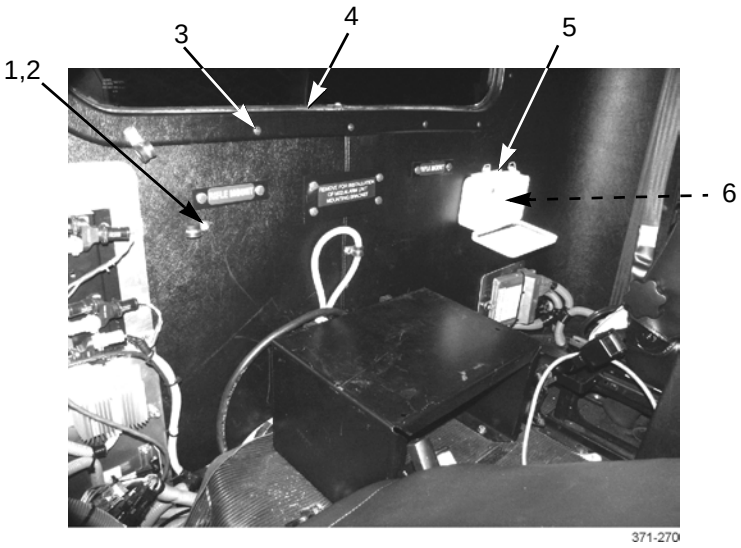

8. Install transmission ECU and mounting plate (WP 0157 00).
9. Install M16 rifle mounting brackets (WP 0284 00 or WP 0285 00).
10. Install interior lights (WP 0110 00).
11. Seat belts installed (WP 0251 00).

END OF WORK PACKAGE

CAB OVERHEAD STORAGE COMPARTMENT REPLACEMENT 0265 00

THIS WORK PACKAGE COVERS

Removal, Installation

INITIAL SETUP

Tools and Special Tools

Tool kit, general mechanic's (Item 50, WP 0306 00)

Personnel Required

Two

REMOVAL

NOTE

Performs steps 1 and 2 on both side of cab.

1. Remove four screws (3) and sun visor (4).
2. Remove screw (1) and sun visor clip (2).

REMOVAL - CONTINUED

3. While supporting center of compartment (6), remove screws (5) securing compartment to cab ceiling.

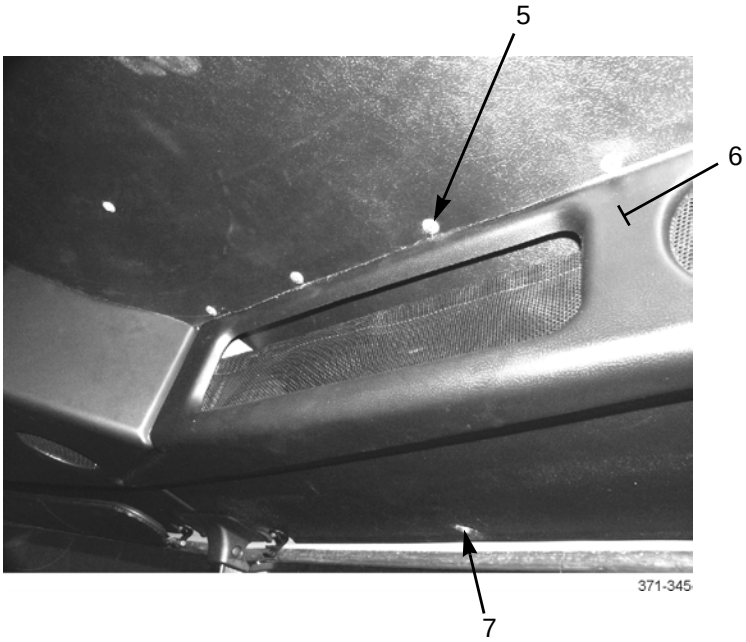

INSTALLATION

1. Position and support center of compartment (6).
2. Install screws (5) securing compartment (6) to cab ceiling.

NOTE

Perform steps 3 and 4 on both sides of cab.

3. Install sun visor clip (2) with screw (1).
4. Install sun visor (4) with four screws (3).

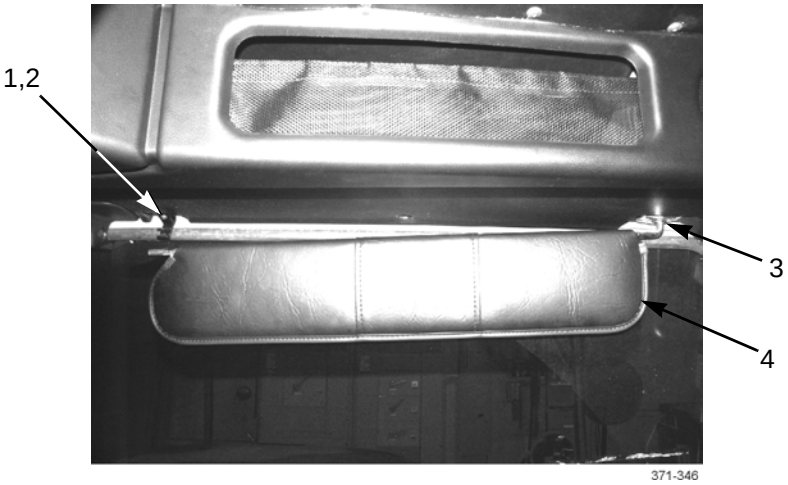

END OF WORK PACKAGE

STEERING COLUMN COVER REPLACEMENT 0266 00

THIS WORK PACKAGE COVERS

Removal, Installation

INITIAL SETUP

Tools and Special Tools

Tool kit, general mechanic's (Item 50, WP 0306 00)

REMOVAL

Remove four screws (1) and cover (2) from steering column.

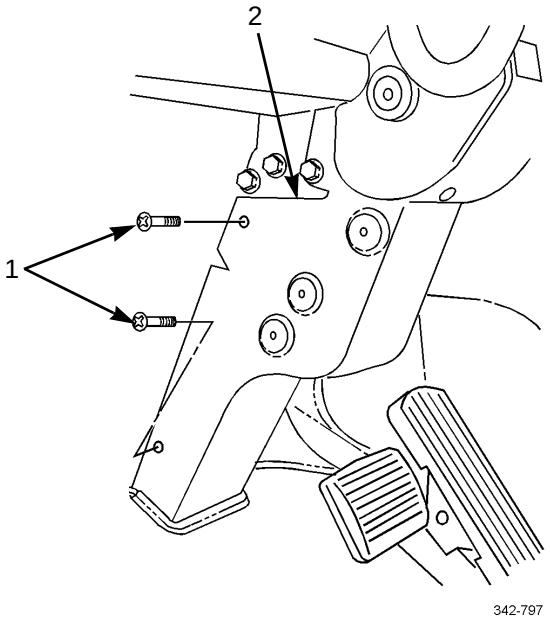

INSTALLATION

Install cover (2) on steering column with four screws (1).

END OF WORK PACKAGE

CAB DOOR ADJUSTMENT 0267 00

THIS WORK PACKAGE COVERS

Adjustment

INITIAL SETUP

Tools and Special Tools

Tool kit, general mechanic's (Item 50, WP 0306 00)

Wrench, torque, 0-200 lb-in (Item 55, WP 0306 00)

Wrench, torque, 15-75 lb-ft (Item 57, WP 0306 00)

Wrench set, socket attachment (Item 61, WP 0306 00)

Materials/Parts

Screws, self-tapping (P/N 23-11036-810) (6)

ADJUSTMENT

NOTE

- If performing cab door adjustment following repair or replacement, perform step 3 through 19.
- Both doors are adjusted the same way.

1. Remove six self-tapping screws (1), leaving two adjusting screws (2 and 3) in place. Discard self-tapping screws.

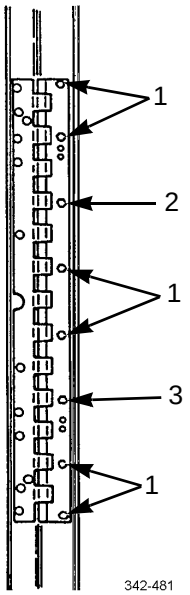

ADJUSTMENT - CONTINUED

2. Remove cap nut (6) and socket head screw (7) from door check arm (4).
3. Push door check arm (4) toward dashboard (5).

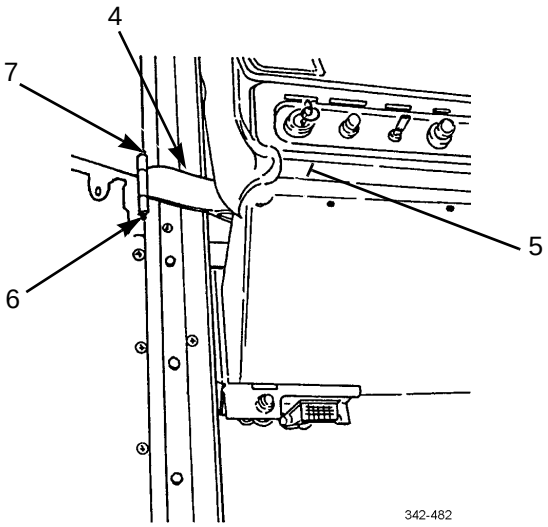

4. With cab door (9) closed, measure distance between top and bottom edges of cab door and door frame (8). Measurements must be equal within 3/32 in (2.38 mm).

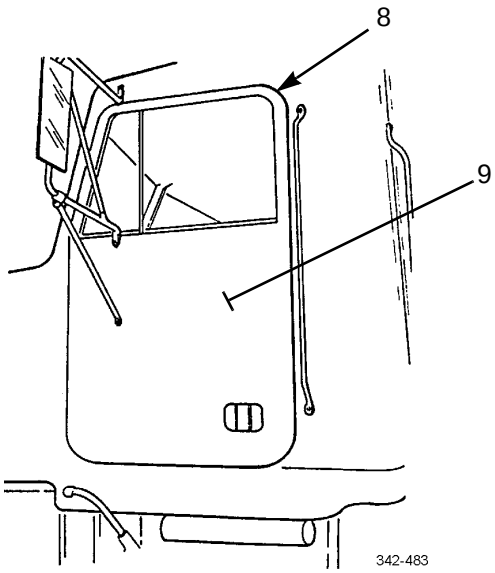

NOTE

Perform steps 5 and 6 only if cab door requires adjustment.

5. To adjust cab door (9), loosen adjusting screws (2 and 3) just enough to allow movement of cab door up and down to required measurement. Tighten adjusting screws.

ADJUSTMENT - CONTINUED

6. Repeat steps 4 and 5 until cab door (9) is properly adjusted.

NOTE

Cab door is fully closed when you hear two clicks of door latch. Door should not have to be slammed shut. If it is necessary to slam cab door shut, door must be adjusted.

7. With cab door (9) fully closed, check in-out position of top of cab door and flange (10) at hinge (11). Cab door must be flush +/- 1/16 in (1.58 mm).

NOTE

Perform steps 8 and 9 only if top of cab door in-out position requires adjustment.

8. To adjust top of cab door (9), loosen adjusting screw (2) and move cab door in or out to required measurement. Tighten adjusting screw.
9. Repeat steps 7 and 8 until top of cab door (9) is properly adjusted.
10. With cab door (9) fully closed, check in-out position of bottom of cab door and flange (10) at hinge (11). Cab door must be flush +/- 1/16 in (1.58 mm)

NOTE

Perform steps 11 and 12 only if bottom of cab door in-out position requires adjustment.

11. To adjust bottom of cab door (9), loosen adjusting screw (3) and move cab door in or out to required measurement. Tighten adjusting screw.

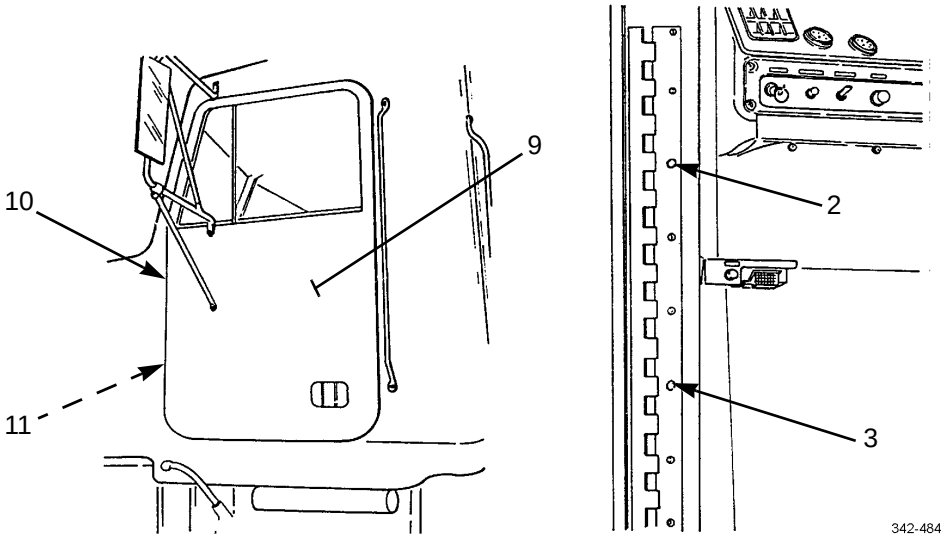

12. Repeat steps 10 and 11 until bottom of cab door (9) is properly adjusted.

ADJUSTMENT - CONTINUED

13. Install six new self-tapping screws (1) and tighten self-tapping screws and adjusting screws (2 and 3) to 120 lb-in (14 Nm) in sequence shown.

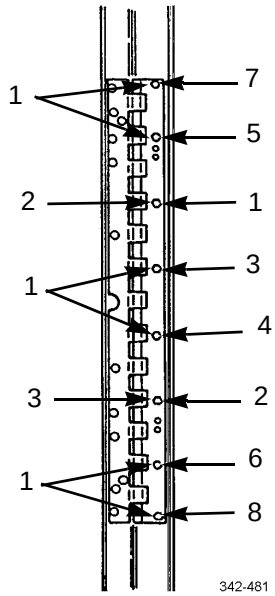

TIGHTENING SEQUENCE

14. Close cab door (9) to within 2 in (5.08 cm) of striker pin (13) and see if door latch jaws (12) are centered on striker pin.

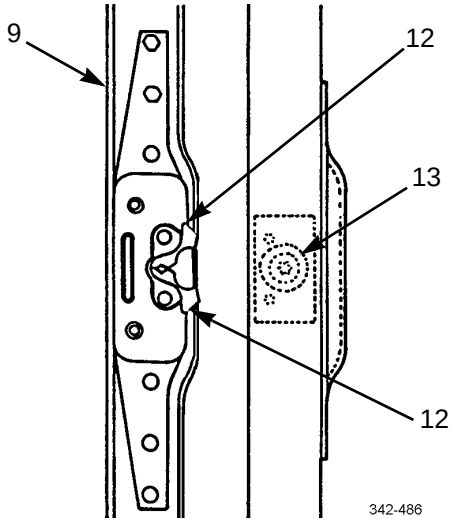

ADJUSTMENT - CONTINUED

15. Loosen torx screw (15) and add or remove shims (14) as necessary to center striker pin (13) and door latch jaws (12).

NOTE

- Steps 16 through 19 must be performed from inside and outside of cab.
- Repeat steps 16 until door fully closes without difficulty.

16. Fully close cab door (9). If cab door was difficult to close or would not close, open cab door, loosen torx screw (15), and move striker pin (13) inward.
17. Tighten torx screw (15) to 37-42 lb-ft (50-57 Nm).

NOTE

Repeat steps 18 until door opens without difficulty.

18. Open cab door (9). If cab door was difficult to open or would not open, loosen torx screw (15) and move striker pin (13) outward.
19. Tighten torx screw (15) to 37-42 lb-ft (50-57 Nm).

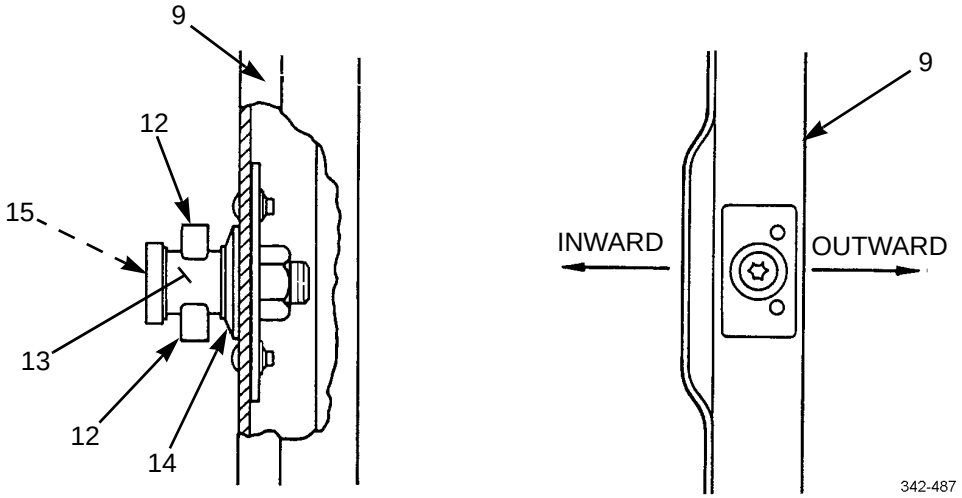

ADJUSTMENT - CONTINUED

20. Move door check arm (4) back into position.
21. Install socket head screw (7) and cap nut (6) on door check arm (4).

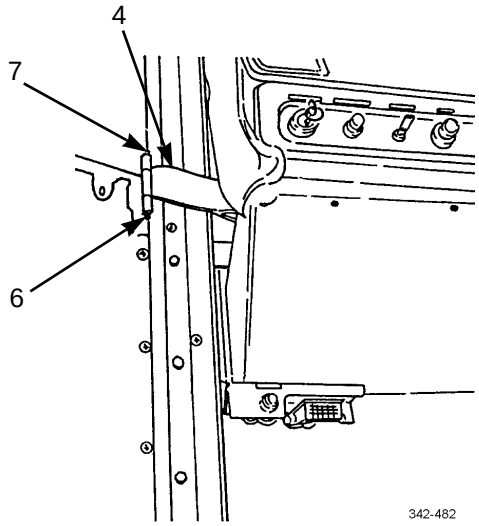

END OF WORK PACKAGE

TRANSMISSION TUNNEL ACCESS COVER REPLACEMENT 0268 00

THIS WORK PACKAGE COVERS

Removal, Installation

INITIAL SETUP

Tools and Special Tools

Tool kit, general mechanic's (Item 50, WP 0306 00)

Wrench set, socket attachment (Item 61, WP 0306 00)

Materials/Parts

Washer, lock (P/N MS35338-44) (12)

Equipment Condition

Fire extinguisher removed (TM 9-2320-302-10)

Transmission shift selector and shift tower removed (WP 0152 00 or WP 0153 00)

REMOVAL

1. Remove four nuts (2), eight washers (3), four screws (4), and fire extinguisher bracket (1) from vehicle.

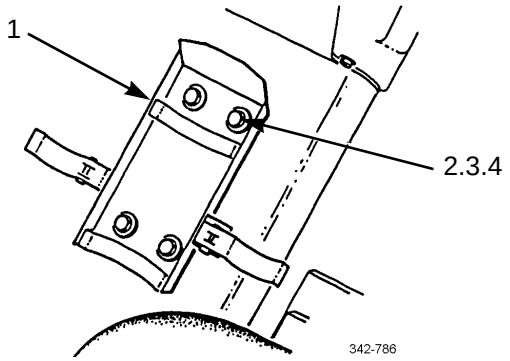

2. From front to rear, remove enough torx screws (5) and washers (6) to roll floor mat (7) back until access cover is fully visible.

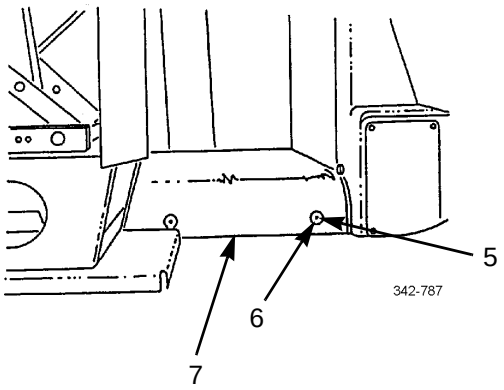

REMOVAL - CONTINUED

3. Remove 12 screws (9), lockwashers (10), and transmission tunnel access cover (8) from vehicle. Discard lockwashers.

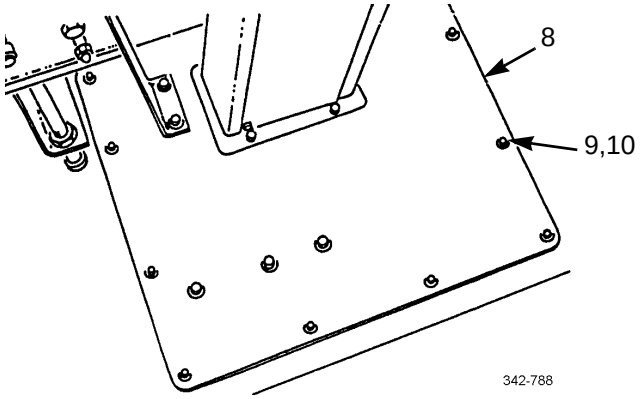

INSTALLATION

1. Install transmission tunnel access cover (8) on vehicle with 12 new lockwashers (10) and screws (9).
2. Roll floor mat (7) forward and install washers (6) and torx screws (5).

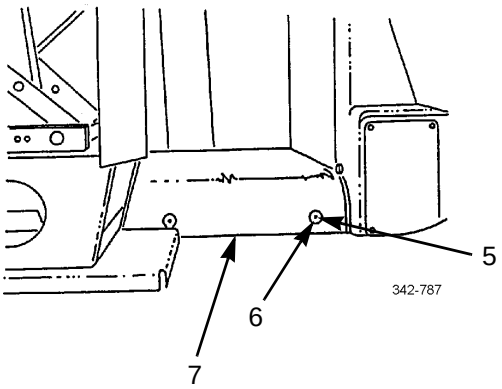

3. Install fire extinguisher bracket (1) on vehicle with four screws (4), eight washers (3), and four nuts (2).

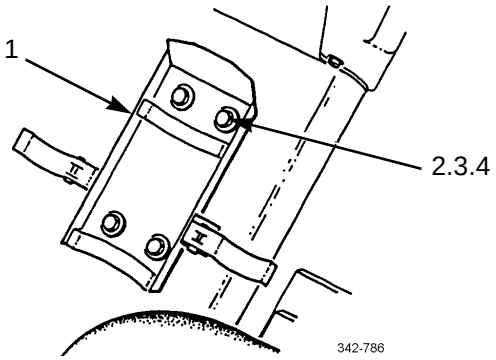

INSTALLATION - CONTINUED

4. Install transmission shift selector and shift tower (WP 0152 00 or WP 0153 00).
5. Install fire extinguisher (TM 9-2320-302-10).

END OF WORK PACKAGE

WINCH HYDRAULIC LINES AND FITTINGS REPLACEMENT (M916A3) 0269 00

THIS WORK PACKAGE COVERS

Removal, Installation

INITIAL SETUP

Tools and Special Tools

Tool kit, general mechanic's (Item 50, WP 0306 00)

REMOVAL

1. Remove six capscrews (1) and cover (2).
2. Remove winch hydraulic lines and fittings using illustration and legend as a guide.

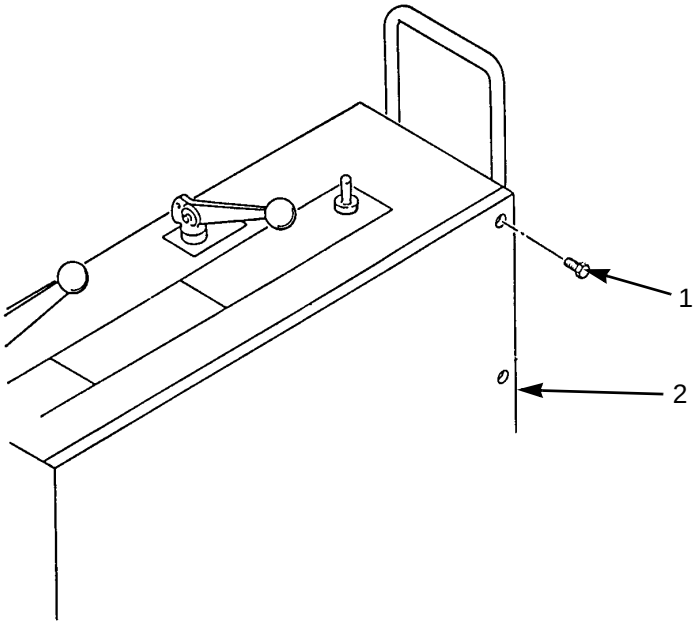

371-326

INSTALLATION

1. Install winch hydraulic lines and fittings using illustration and legend as a guide.
2. Install cover (2) and six capscrews (1).

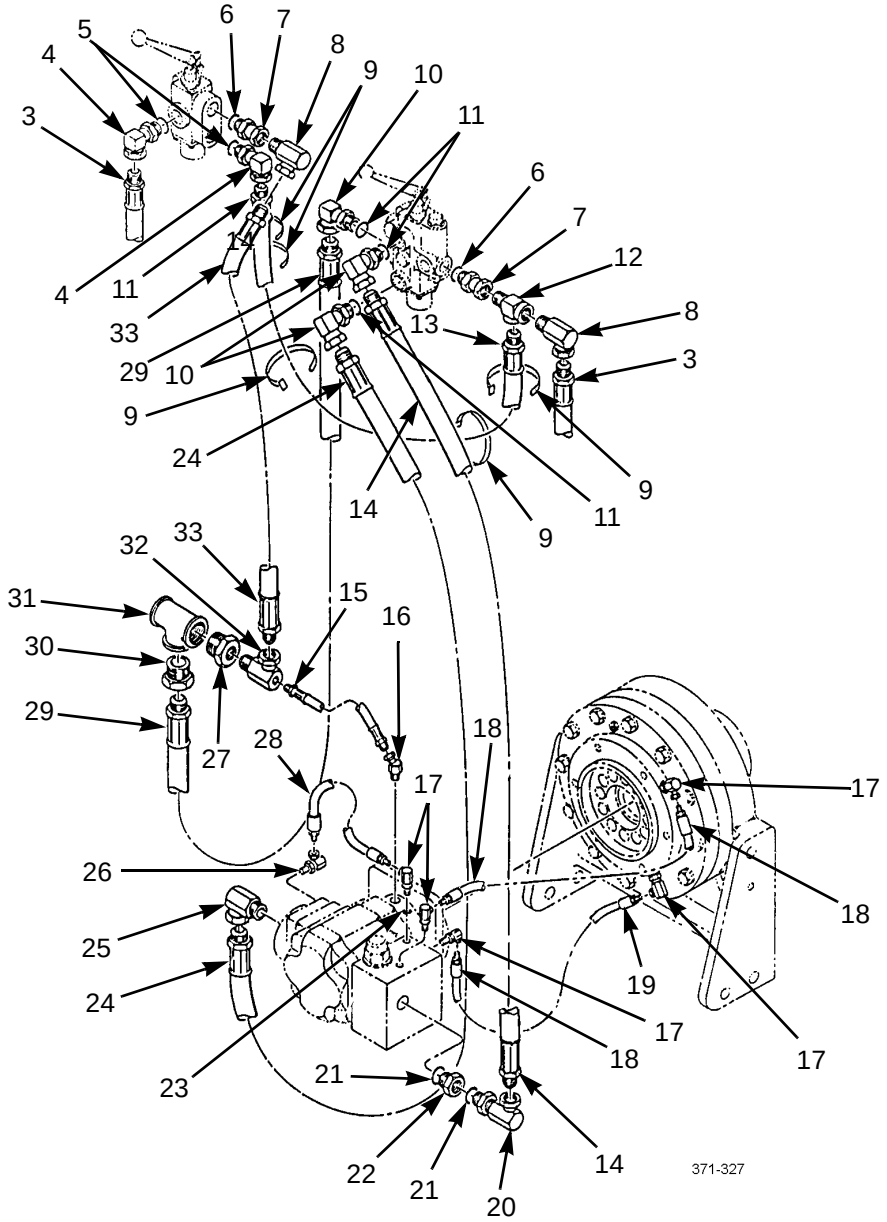

3	Hose Assembly	14	Hose Assembly	25	Adapter
4	Adapter (2)	15	Hose Assembly	26	Adapter
5	Packing (2)	16	Adapter	27	Bushing
6	Packing (2)	17	Adapter (5)	28	Hose Assembly
7	Adapter (2)	18	Hose Assembly (2)	29	Hose Assembly
8	Adapter (2)	19	Hose Assembly	30	Bushing
9	Tie Wrap (5)	20	Adapter	31	Tee
10	Adapter (3)	21	Packing (2)	32	Tee
11	Packing (3)	22	Bushing	33	Hose Assembly
12	Tee	23	Packing		
13	Hose Assembly	24	Hose Assembly		

END OF WORK PACKAGE

WINCH WIRE ROPE REPLACEMENT (M916A3) 0270 00

THIS WORK PACKAGE COVERS

Removal, Inspection, Installation

INITIAL SETUP

Tools and Special Tools

Tool kit, general mechanic's (Item 50, WP 0306 00)

Personnel Required

Two

References

FM 5-725

Equipment Condition

Wire rope completely payed out (TM 9-2320-302-10)

REMOVAL

WARNING

Always wear heavy gloves when handling winch cables. Never allow cable to run through hands; frayed cables can cut.

Remove two socket head screws (2), clamp (3), and cable (1).

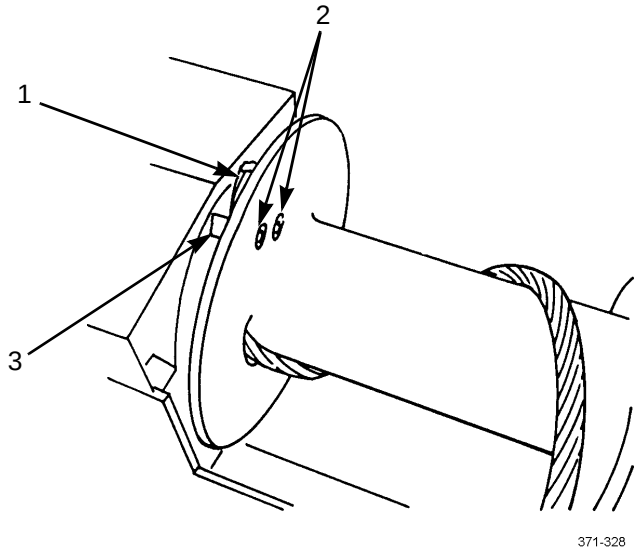

INSPECTION

Inspect wire rope assembly in accordance with FM 5-725.

INSTALLATION

WARNING

Always wear heavy gloves when handling winch cables. Never allow cable to run through hands; frayed cables can cut.

NOTE

Cable end must protrude 1.5 - 2.0 in beyond clamp.

1. Install cable (1), clamp (3), and two socket head screws (2). Tighten screws to 100 lb-in (11.3 Nm).

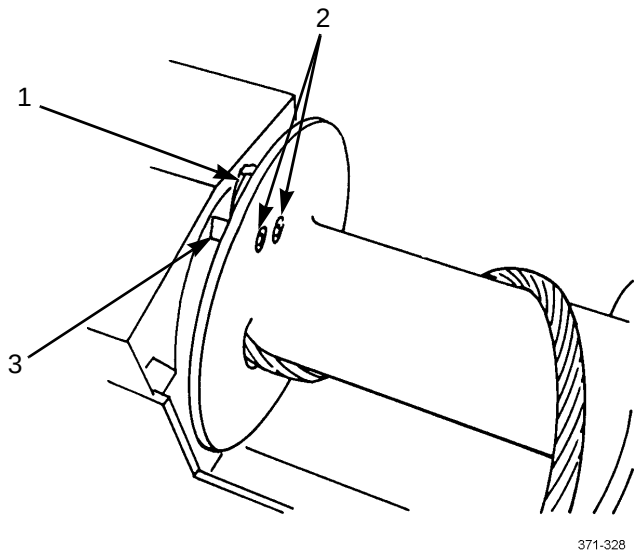

2. Completely pay in wire rope (TM 9-2320-302-10).

END OF WORK PACKAGE

WINCH HYDRAULIC OIL TANK MAINTENANCE (M916A3) 0271 00

THIS WORK PACKAGE COVERS

Removal, Disassembly, Assembly, Installation

INITIAL SETUP

Tools and Special Tools

Tool kit, general mechanic's (Item 50, WP 0306 00)

Materials/Parts

Compound, pipe sealing (Item 13, WP 0305 00)

Packing (P/N 9647) (2)

Nut, lock (P/N 1392) (4)

Personnel Required

Two

References

WP 0023 00

Equipment Condition

Hydraulic oil filter removed (WP 0272 00)

REMOVAL

WARNING

Spilled hydraulic fluid is very slippery. Wipe up any spilled fluid immediately. Failure to do so could result in serious injury to personnel.

1. Remove plug (1) and drain oil into suitable container, 55-gallon capacity.
2. Loosen four clamps (2) and disconnect two hoses (3).

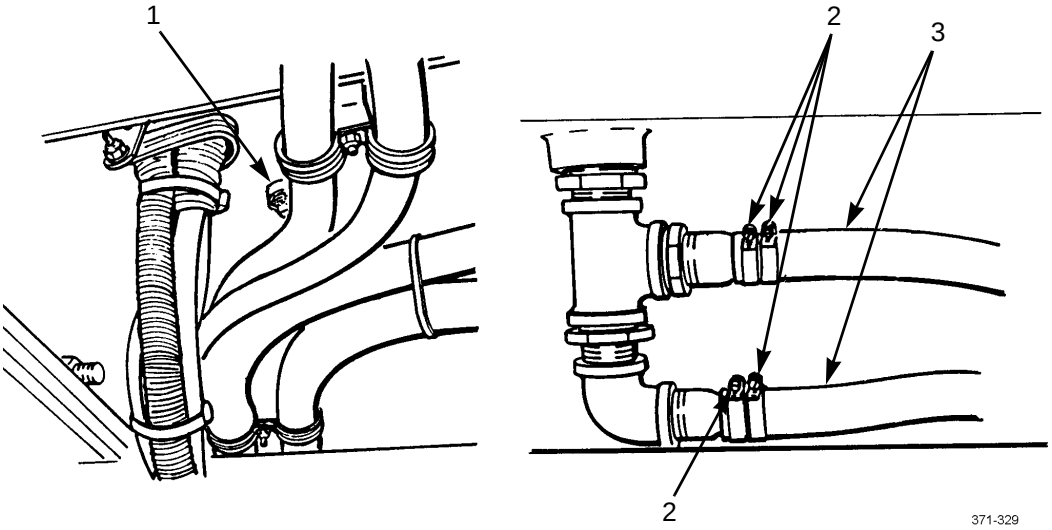

REMOVAL - CONTINUED

WARNING

Winch hydraulic oil tank weighs 130 lb (59 kg). Use suitable hoist to remove oil tank to prevent possible injury to personnel.

3. Remove four locknuts (4), four bolts (5), and hydraulic oil tank (6). Discard locknuts.

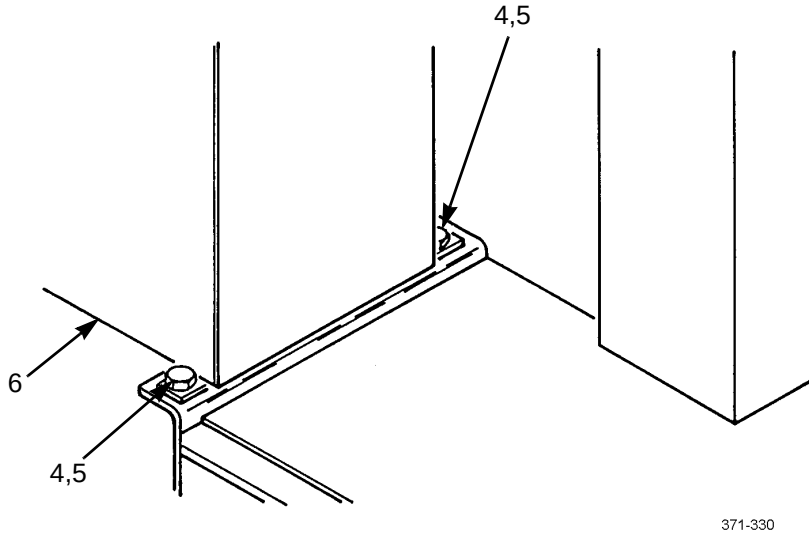

4. Remove elbow (8) and tee (7).

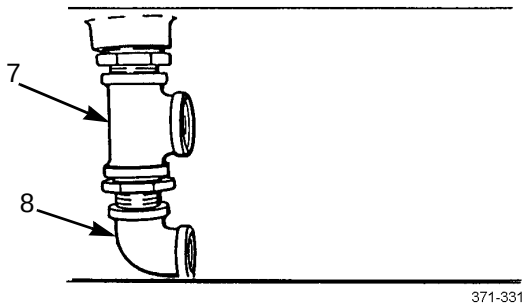

DISASSEMBLY

Disassemble hydraulic oil tank (6) using illustration and legend as a guide.

ASSEMBLY

Assemble hydraulic oil tank (6) using illustration and legend as a guide.

ASSEMBLY - CONTINUED

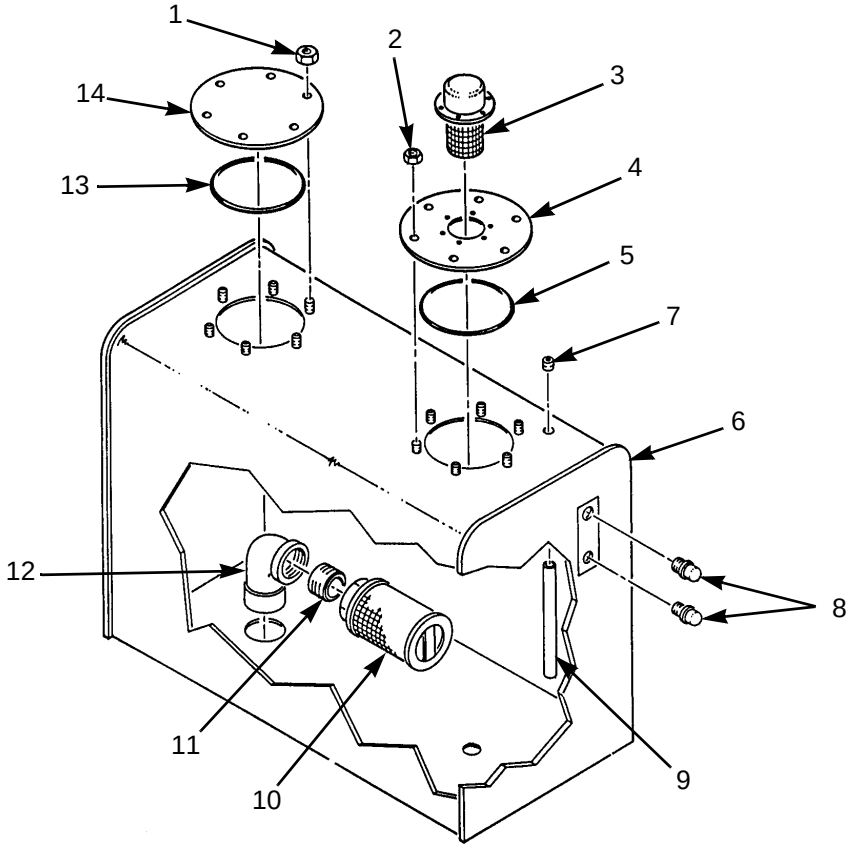

1	Nut (6)	6	Tank	11	Nipple
2	Nut (6)	7	Plug	12	Elbow
3	Breather	8	Sight Glass (2)	13	Packing
4	Cover	9	Tube	14	Cover
5	Packing	10	Strainer		

INSTALLATION

NOTE

Coat threads of tee and elbow with sealing compound.

1. Install tee (7) and elbow (8).

WARNING

- Winch hydraulic oil tank weighs 130 lb (59 kg). Use suitable hoist to remove oil tank to prevent possible injury to personnel.
- Spilled hydraulic fluid is very slippery. Wipe up any spilled fluid immediately. Failure to do so could result in serious injury to personnel.

2. Install hydraulic oil tank (6), four bolts (4), and four new locknuts (5).
3. Connect two hoses (3) and tighten four clamps (2).

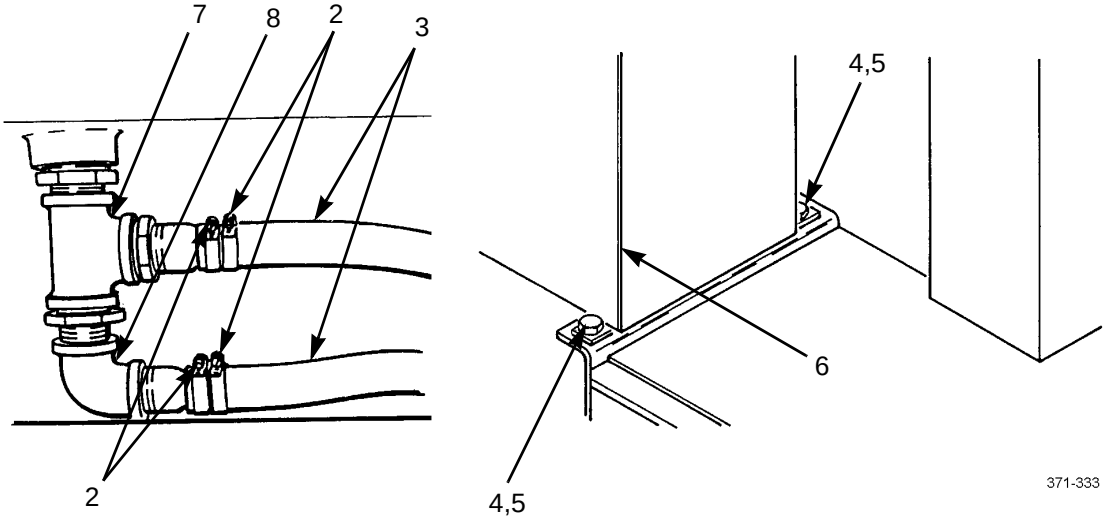

4. Install plug (1).

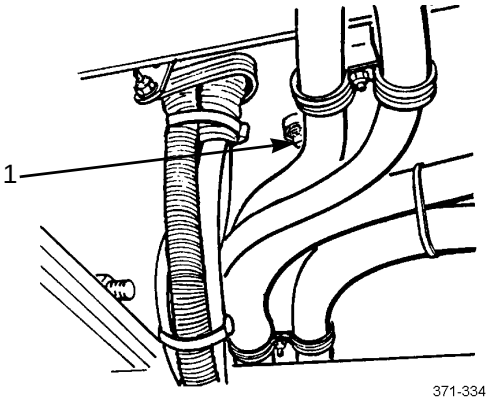

5. Install hydraulic oil filter (WP 0272 00).
6. Fill hydraulic oil tank (WP 0023 00).

END OF WORK PACKAGE

WINCH HYDRAULIC OIL FILTER ELEMENT REPLACEMENT (M916A3) 0272 00

THIS WORK PACKAGE COVERS

Removal, Installation

INITIAL SETUP

Tools and Special Tools

Tool kit, general mechanic's (Item 50, WP 0306 00)

Pan, drain (Item 29, WP 0306 00)

Materials/Parts

Oil, lubricating (Item 22, WP 0305 00)

Element, oil filter with gasket (P/N 74036)

References

WP 0023 00

REMOVAL

WARNING

Spilled hydraulic fluid is very slippery. Wipe up any spilled fluid immediately. Failure to do so could result in serious injury to personnel.

NOTE

Place suitable container under oil filter to catch oil that will drain out when filter is removed.

Remove and discard oil filter (2) and gasket (3) from oil filter (1).

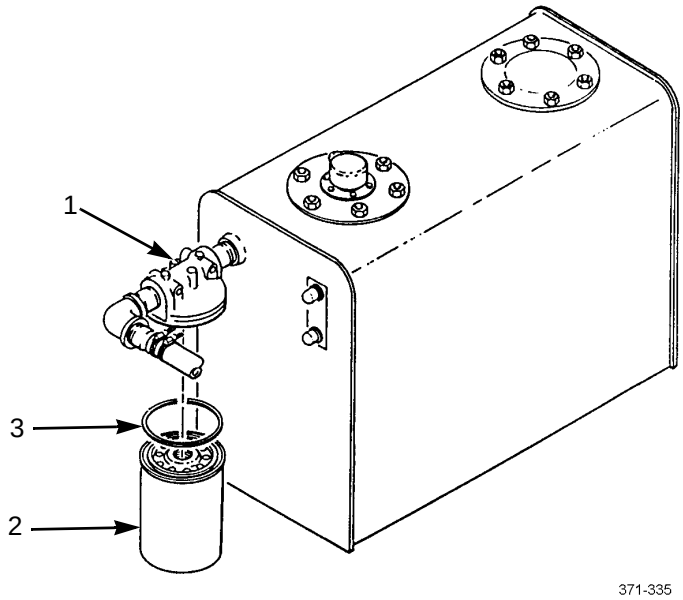

INSTALLATION

WARNING

Spilled hydraulic fluid is very slippery. Wipe up any spilled fluid immediately. Failure to do so could result in serious injury to personnel.

1. Fill new oil filter element (2) with 1 qt oil.
2. Install new gasket (3) on oil filter element (2) and apply thin coat of lubricating oil to gasket.
3. Install until top of oil filter element (2) is just touching oil filter (1).

CAUTION

To prevent damage to equipment, do not use filter wrench or strap wrench to tighten oil filter element.

4. Tighten oil filter element (2) 3/4 turn.

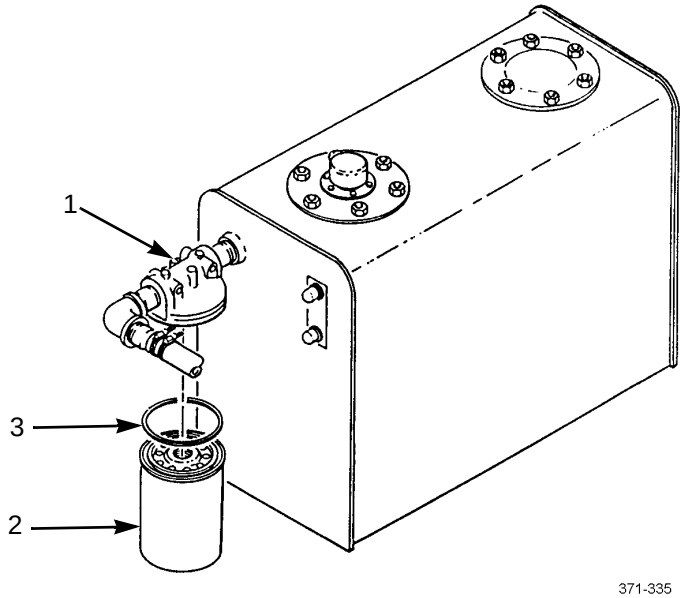

5. Check sight gage and fill hydraulic tank, if required (WP 0023 00).

END OF WORK PACKAGE

POWER TAKE-OFF (PTO) SOLENOID VALVE REPLACEMENT (M916A3, M917A2) 0273 00

THIS WORK PACKAGE COVERS

Removal, Installation

INITIAL SETUP

Tools and Special Tools

Tool kit, general mechanic's (Item 50, WP 0306 00)

Materials/Parts

Strap, tiedown (Item 33, WP 0305 00)

Tag, marker (Item 34, WP 0305 00)

Equipment Condition

Master battery switch in OFF position (TM 9-2320-302-10)

Air system drained (TM 9-2320-302-10)

Transmission tunnel access cover removed (WP 0268 00)

REMOVAL

1. Disconnect hose assembly (2).

NOTE

Tag air hoses prior to removal to aid in installation.

2. Disconnect two air hoses (1).

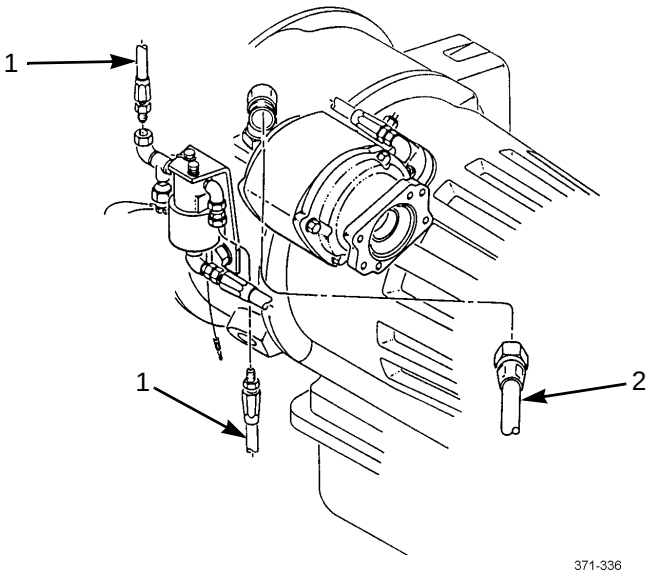

3. Remove two screws (3), washer (14), and washer (13) and disconnect ground wire (12).
4. Disconnect air hoses (6) from PTO (5) and PTO solenoid valve (10).
5. Remove two tiedown straps (4).

REMOVAL - CONTINUED

6. Disconnect electrical connector (7).

NOTE

Tag wires prior to removal to aid in installation.

7. Remove two screws (8) and disconnect two wires (9) from PTO solenoid valve (10).
8. Remove PTO pressure switch (11) from PTO solenoid valve (10).

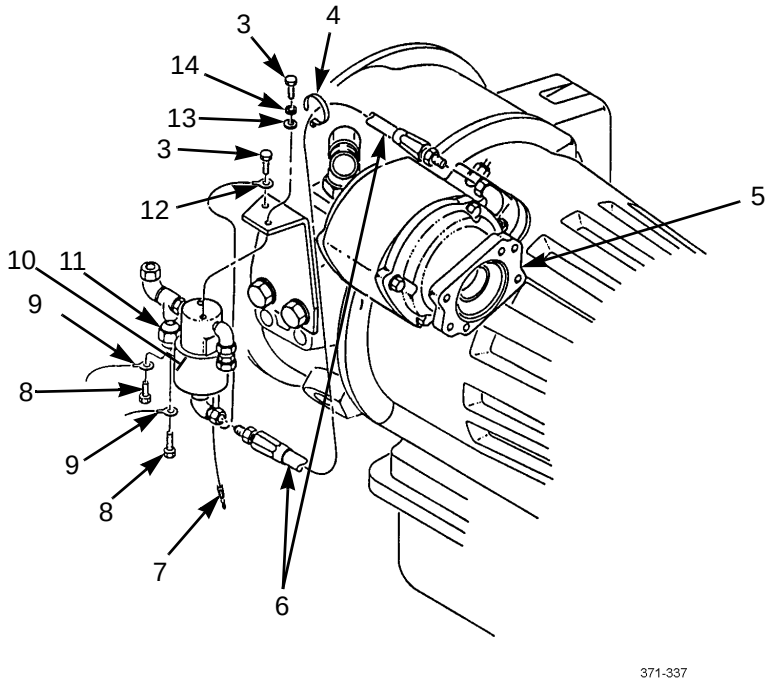

INSTALLATION

1. Install PTO pressure switch (11) on PTO solenoid valve (10).
2. Connect two wires (9) and install two screws (8) on PTO solenoid valve (10).
3. Connect electrical connector (7).
4. Install two tiedown straps (4).
5. Connect air hose (6) to PTO (5) and PTO solenoid valve (10).
6. Install PTO solenoid valve (10), connect ground wire (12), and install washer (13), washer (14), and two screws (3).
7. Connect two air hoses (1).
8. Connect hose assembly (2).
9. Install transmission tunnel access cover (WP 0268 00).

END OF WORK PACKAGE

WINCH SPEED CONTROL SWITCH REPLACEMENT (M916A3) 0274 00

THIS WORK PACKAGE COVERS

Removal, Installation

INITIAL SETUP

Tools and Special Tools

Tool kit, general mechanic's (Item 50, WP 0306 00)

Materials/Parts

Washer, lock (6) (P/N MS35338-44)

Equipment Condition

Master battery switch in OFF position (TM 9-2320-302-10)

REMOVAL

1. Remove six screws (4), lockwashers (3), and cover (5). Discard lockwashers.
2. Remove two screws (8) and disconnect two wires (7) from switch (6).
3. Remove boot (1), nut (9), and switch (6) from winch control box (2).

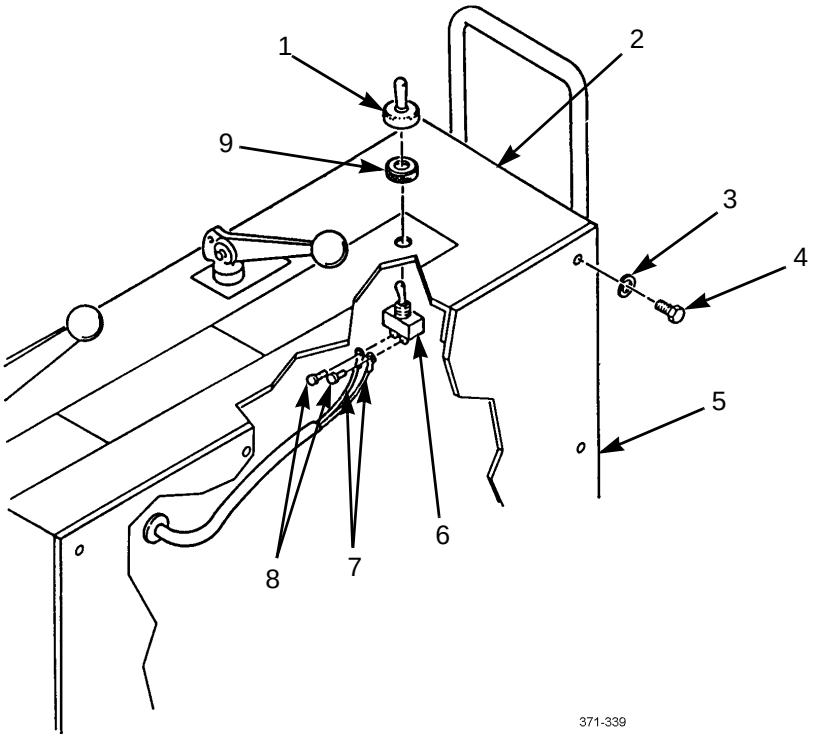

INSTALLATION

1. Install switch (6), nut (9), and boot (1) in winch control box (2).
2. Connect two wires (7) and install two screws (8) in switch (6).
3. Install cover (5), six new lockwashers (3), and six screws (4) in winch control box (2).

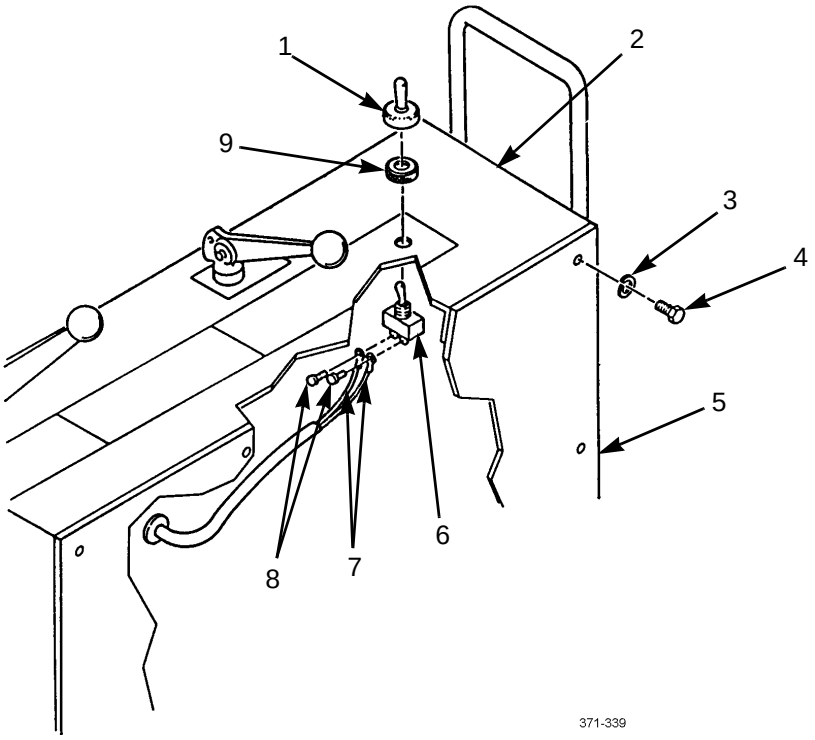

END OF WORK PACKAGE

REAR VIEW MIRROR REPLACEMENT (M915A3 OLD MODEL) 0275 00

THIS WORK PACKAGE COVERS

Removal, Installation

INITIAL SETUP

Tools and Special Tools

Tool kit, general mechanic's (Item 50, WP 0306 00)

Materials/Parts

Strap, tiedown (Item 33, WP 0305 00)

Nut, lock (P/N M45913/1-4CG5C) (8)

NOTE

Left and right rear view mirrors are replaced the same way. Left rear view mirror is shown.

REMOVAL

1. Remove tiedown straps (15) securing wiring harness (16).
2. Disconnect wiring harness connector (10) from mirror harness connector (9).
3. Remove cap nut (18), washer (11), screw (13), and washer (12) from mirror (8).
4. Remove locknut (22), washer (21), screw (19), and washer (20) from mirror (8). Discard locknut.
5. Remove three locknuts (14), washers (17), socket head screws (25), washers (24), and spacers (23) from mirror (8). Discard locknuts.
6. Remove four locknuts (1), washers (2), screws (4), washers (3), and support (5) from door. Discard locknuts.
7. Remove two cap nuts (6), three washers (7), and mirror (8) from support (5).

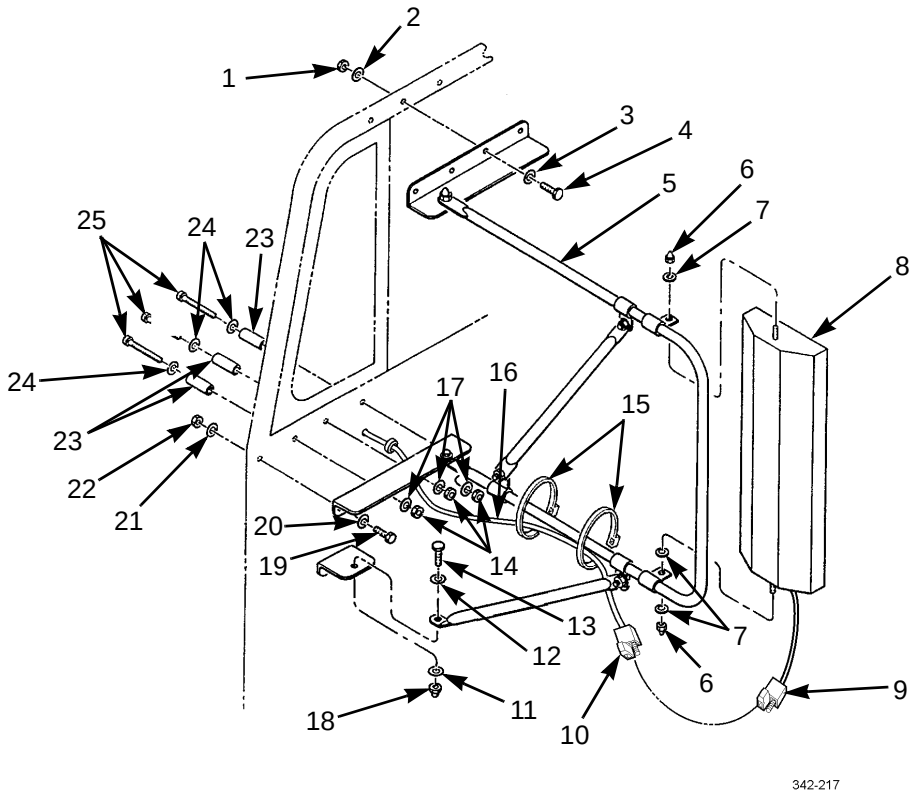

INSTALLATION

1. Install mirror (8) on support (5) with three washers (7) and two cap nuts (6).
2. Install support (5) on door with four washers (3), screws (4), washers (2), and new locknuts (1).
3. Install three spacers (23), washers (24), socket head screws (25), washers (17), and new locknuts (14) on mirror (8).
4. Install washer (20), screw (19), washer (21), and new locknut (22) on mirror (8).
5. Install washer (12), screw (13), washer (11), and cap nut (18) on mirror (8).
6. Connect wiring harness connector (10) to mirror harness connector (9).
7. Secure wiring harness (16) using tiedown straps (15).

END OF WORK PACKAGE

REAR VIEW MIRROR REPLACEMENT (M915A3 NEW MODEL, M916A3, M917A2) 0276 00

THIS WORK PACKAGE COVERS

Removal, Installation

INITIAL SETUP

Tools and Special Tools

Tool kit, general mechanic's (Item 50, WP 0306 00)

Materials/Parts

Straps, tiedown (Item 33, WP 0305 00)

Tags, marker (Item 34, WP 0305 00)

Nut, lock (P/N 23-09336-007) (2)

Washer, lock (P/N 23-09983-025) (2)

References

TM 9-2320-302-10

Equipment Condition

Master battery switch in OFF position (TM 9-2320-302-10)

REMOVAL

1. Remove tiedown straps (2) and discard.
2. Remove grommet (4) from bottom of mirror (1) to expose four remote-control mirror connectors (5).

NOTE

Tag wires to ensure correct installation.

3. Disconnect four connectors (5) from connectors of wiring harness (3).

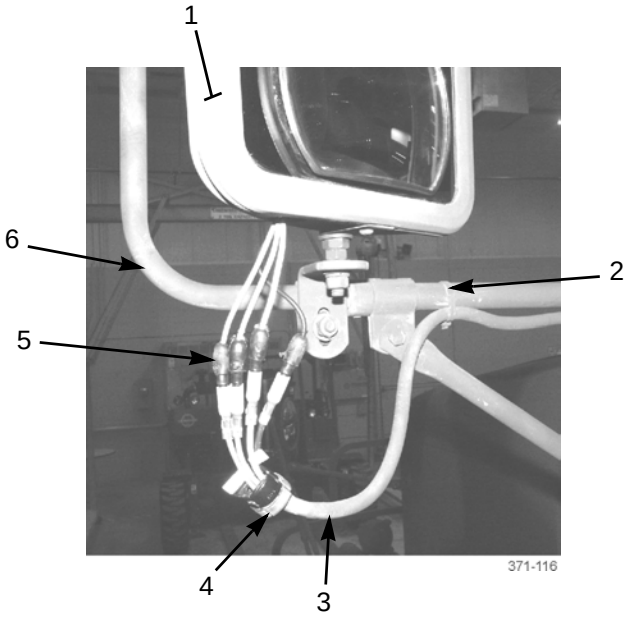

REMOVAL - CONTINUED

NOTE

Perform steps 4 and 5 at top and bottom of mirror.

4. Remove locknut (12), four washers (13), screw (14), and angle bracket (8) with mirror (1) from support (6). Discard locknut.
5. Remove nut (9), lockwasher (10), two washers (11), and angle bracket (8) from mirror (1). Discard lockwasher.

NOTE

- Spotter mirror is adhered to mirror by means of self-adhesive backing.
- If vehicle is equipped with bracket-mounted spotter mirror, perform steps 7 and 8.

6. If damaged, remove spotter mirror (7) from mirror (1).
7. Remove nut (16) and spotter mirror (15) from bracket (17).
8. Remove nut (18), washer (19), and bracket (17).

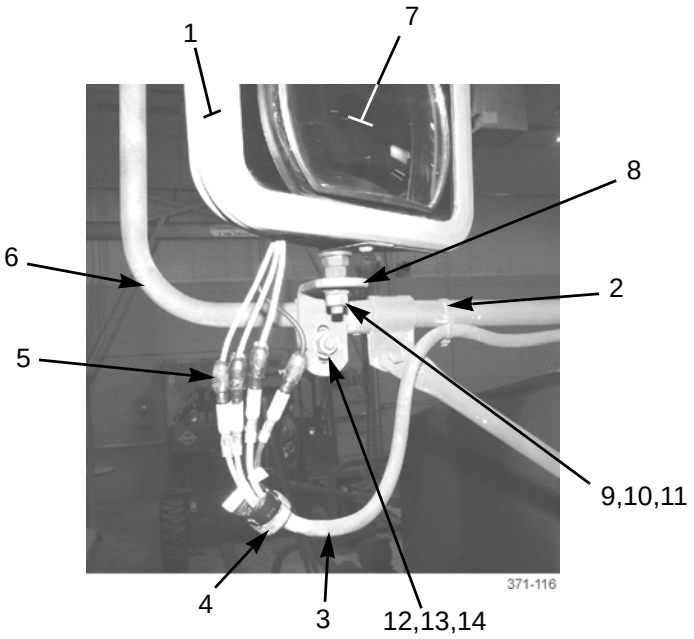

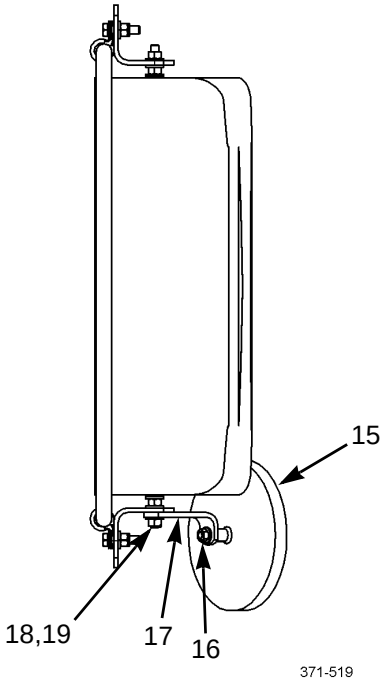

NOTE

Perform steps 7 and 8 to remove mirror support from mounting brackets on cab door.

9. Remove cap nut (26) and screw (24) and separate support (6) from bracket (25).

NOTE

Note position of mounting hardware to ensure correct installation.

10. Remove cap nut (23), spring (22), screw (21), and support (6) from bracket (20) on cab door.

REMOVAL - CONTINUED

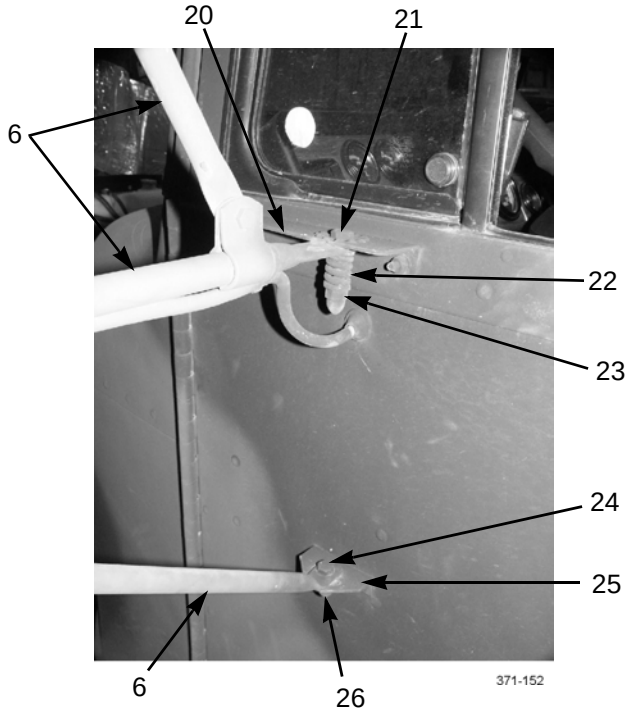

INSTALLATION

NOTE

- Perform steps 1 and 2 to install mirror support to mounting brackets on cab door.
- If vehicle is equipped with bracket-mounted spotter mirror, perform steps 4 and 5.

1. Position mirror support (6) on bracket (20), install screw (21), spring (22), and cap nut (23).
2. Secure support (6) to bracket (25) with screw (24) and cap nut (26).

NOTE

Ensure that mounting surface for spotter mirror is clean and dry.

3. If spotter mirror was replaced, remove paper backing from new spotter mirror (7). Press spotter mirror in place, centered at bottom of mirror (1).
4. Install spotter mirror (15) on bracket (17) with nut (16).
5. Install bracket (17) with washer (19) and nut (18).

NOTE

Perform steps 4 and 5 at top and bottom of mirror.

6. Install angle bracket (8) to mirror (1) with two washers (11), new lockwasher (10), and nut (9).
7. Install mirror (1) to support (6) with screw (14), four washers (13), and new locknut (12) through angle bracket (8).
8. Connect four remote-control mirror connectors (5) to connectors of wiring harness (3).
9. Feed connectors (5) and excess wiring inside housing of mirror (1) and install grommet (4).
10. Secure wiring harness (3) on support (6) with new tiedown straps (2).

INSTALLATION - CONTINUED

11. Check operation of mirrors (TM 9-2320-302-10).

END OF WORK PACKAGE

SPOTTER MIRROR REPLACEMENT 0277 00

THIS WORK PACKAGE COVERS

Removal, Installation

INITIAL SETUP

Tools and Special Tools

Tool kit, general mechanic's (Item 50, WP 0306 00)

Materials/Parts

Nut, lock (P/N MS51922-1) (3)

Personnel Required

Two

Equipment Condition

Hood opened (TM 9-2320-302-10)

REMOVAL

1. Remove three locknuts (10) and washers (11) from hood liner (9). Discard locknuts.
2. Remove three nuts (8), washers (7), screws (13), mirror assembly (4), three spacers (5), and washers (12) from hood (6).
3. Remove screw (1), washer (2), and spotter mirror (3) from mirror assembly (4).

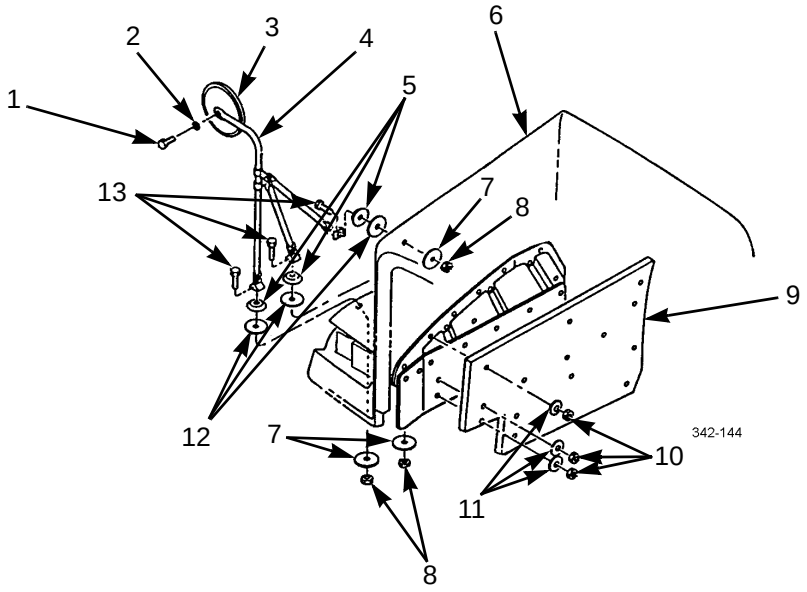

INSTALLATION

NOTE

Some replacement mirrors may not have a drain hole. Drill a 1/16 inch hole at 6 o'clock position to allow any moisture to drain.

1. Install spotter mirror (3) on mirror assembly (4) with washer (2) and screw (1).

INSTALLATION - CONTINUED

2. Install three washers (12), spacers (5) and mirror assembly (4) on hood (6) with three screws (13), washers (7), and nuts (8).
3. Install three washers (11) and new locknuts (10) on hood liner (9).

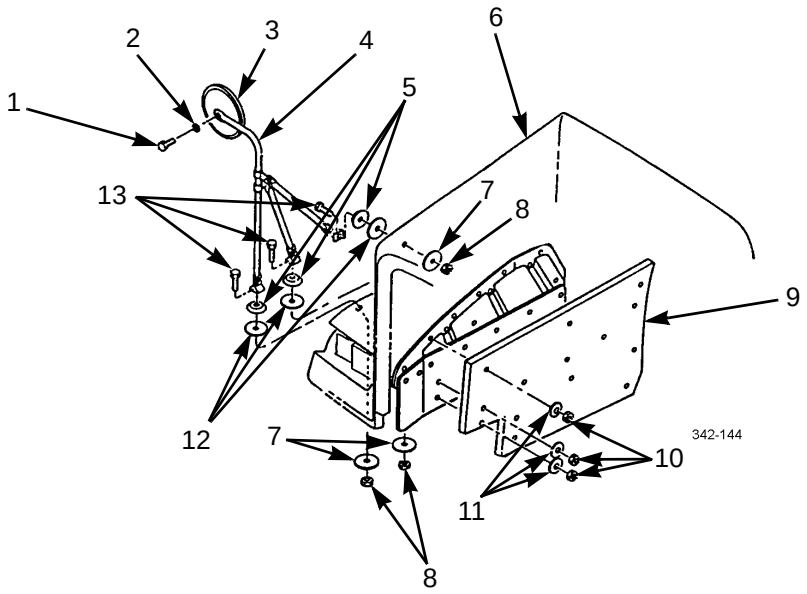

4. Close hood and adjust mirrors (TM 9-2320-302-10).

END OF WORK PACKAGE

WINDSHIELD WIPER MOTOR AND LINKAGE REPLACEMENT 0278 00

THIS WORK PACKAGE COVERS

Removal, Installation

INITIAL SETUP

Tools and Special Tools

Tool kit, general mechanic's (Item 50, WP 0306 00)

Wrench, torque, 0-200 lb-in (Item 55, WP 0306 00)

Materials/Parts

Seal, rubber (P/N 908028) (2)

Materials/Parts - Continued

Nut, lock (P/N 23-09900-104) (2)

Equipment Condition

Master battery switch in OFF position (TM 9-2320-302-10)

Windshield wipers and wiper arms removed (WP 0282 00)

REMOVAL

1. Pry connecting link (1) from linkage pivot bar (2).
2. Remove rubber seal (9) from ball joint of linkage pivot bar (2). Discard rubber seal.
3. Disconnect connector of wiper motor (6) from cab wiring harness.
4. Remove two locknuts (4) from bracket (3). Discard locknuts.
5. Remove two screws (8), washers (7), and spacers (5) securing bracket (3) and wiper motor (6) to firewall.
6. Remove bracket (3) and wiper motor (6).

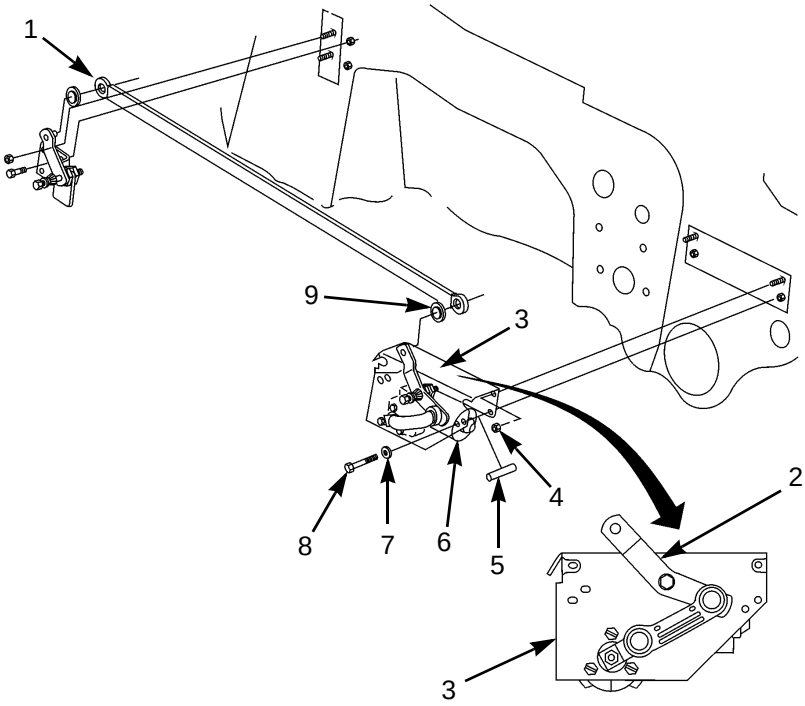

342-218

REMOVAL - CONTINUED

7. Remove nut (11) and pry wiper motor crank (10) from shaft of wiper motor (6).
8. Remove three screws (12) and wiper motor (6) from bracket (3).
9. Remove two nuts (14), two screws (13), and pivot assembly (15) from firewall.
10. Pry connecting link (1) from pivot assembly (15).
11. Remove rubber seal (16) from ball joint of pivot assembly (15). Discard rubber seal.

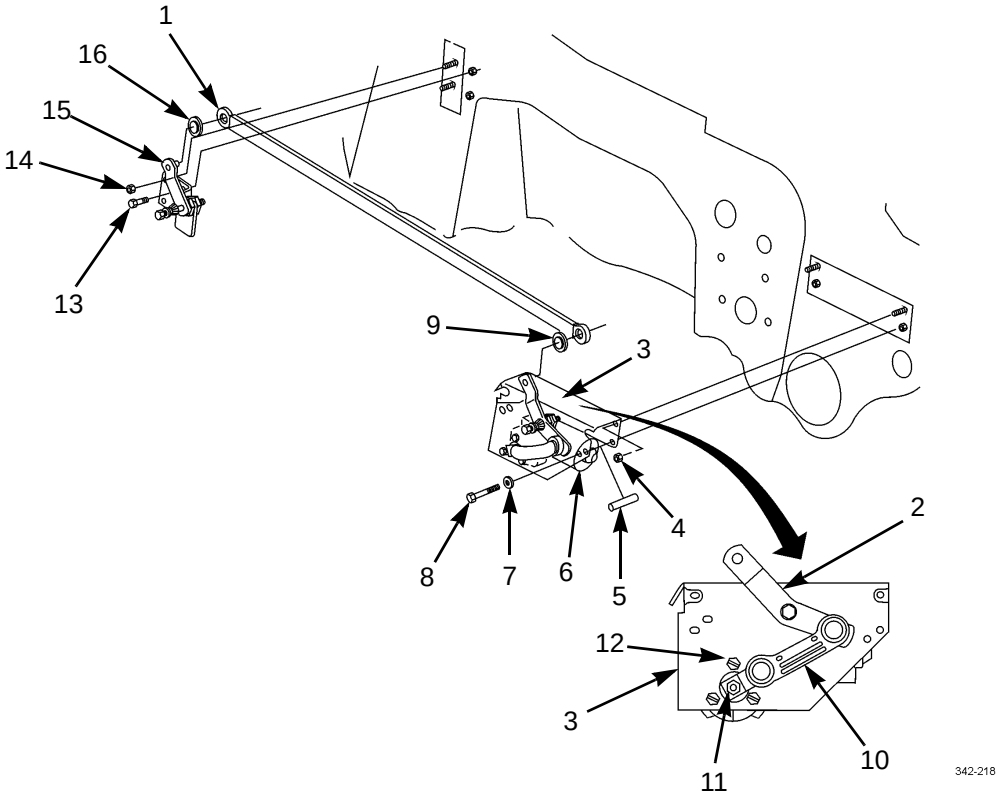

INSTALLATION

1. Install new rubber seal (16) to ball joint of pivot assembly (15).
2. Install connecting link (1) to pivot assembly (15).
3. Install pivot assembly (15) to firewall with two screws (13) and two nuts (14).
4. Install wiper motor (6) to bracket (3) with three screws (12). Tighten screws to 55 lb-in (621 Ncm).
5. Install wiper motor crank (10) to shaft of wiper motor (6) with nut (11).
6. Position bracket (3) and wiper motor (6) to firewall.
7. Install two spacers (5), washers (7), and screws (8). Tighten screws to 60-84 lb-in (678-949 Ncm).

INSTALLATION - CONTINUED

8. Install two new locknuts (4) to bracket (3). Tighten nuts to 60-84 lb-in (678-949 Ncm).
9. Connect connector of wiper motor (6) to cab wiring harness.
10. Install new rubber seal (9) to ball joint of linkage pivot bar (2).
11. Install connecting link (1) to linkage pivot bar (2).
12. Install windshield wipers and wiper arms (WP 0282 00).

END OF WORK PACKAGE

WINDSHIELD WASHER RESERVOIR REPLACEMENT 0279 00

THIS WORK PACKAGE COVERS

Pump Removal, Reservoir Removal, Pump Installation, Reservoir Installation

INITIAL SETUP

Tools and Special Tools

Tool kit, general mechanic's (Item 50, WP 0306 00)

Pan, drain (Item 29, WP 0306 00)

Equipment Condition

Master battery switch in OFF position (TM 9-2320-302-10)

Materials/Parts

Compound, cleaning, windshield (Item 11, WP 0305 00)

PUMP REMOVAL

1. Remove wiring harness connector (10) from windshield washer reservoir pump (9).
2. Remove hose (11) from pump (9) and allow windshield washer solvent to drain into a suitable container.
3. Remove pump (9) from windshield washer reservoir (5).

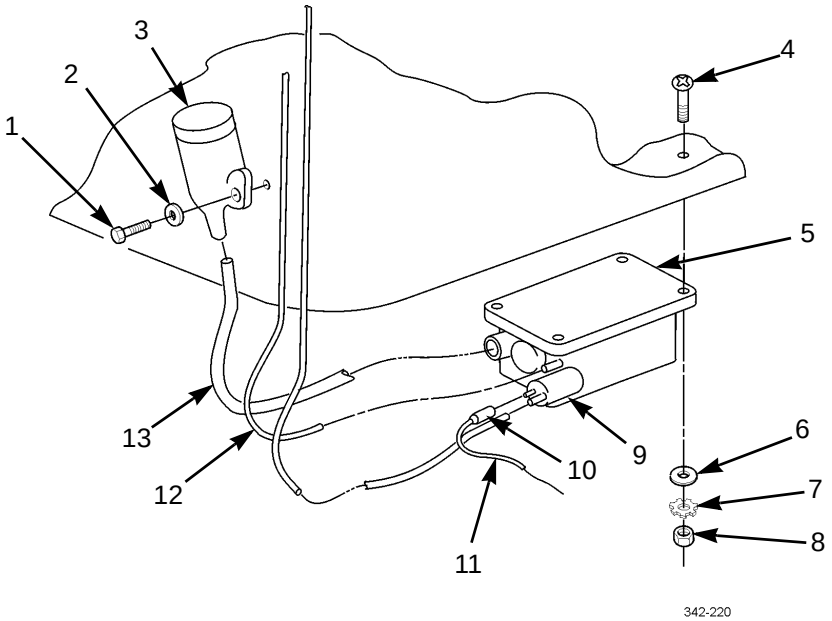

RESERVOIR REMOVAL

1. Remove filler tube (13) from filler spout (3) and windshield washer reservoir (5).
2. Remove vent hose (12) from windshield washer reservoir (5).
3. Remove two screws (1), washers (2), and filler spout (3) from vehicle.
4. Remove four nuts (8), washers (7), washers (6), screws (4), and windshield washer reservoir (5) from vehicle.

PUMP INSTALLATION

1. Install pump (9) on windshield washer reservoir (5).
2. Install hose (11) on windshield washer reservoir pump (9).
3. Install wiring harness connector (10) on windshield washer reservoir pump (9).

RESERVOIR INSTALLATION

1. Install windshield washer reservoir (5) on vehicle with four screws (4), washers (6), washers (7), and nuts (8).
2. Install filler spout (3) on vehicle with two washers (2) and screws (1).
3. Install vent hose (12) on windshield washer reservoir (5).
4. Install filler tube (13) on windshield washer reservoir (5) and filler spout (3).
5. Fill windshield washer reservoir (5) with windshield cleaning compound.

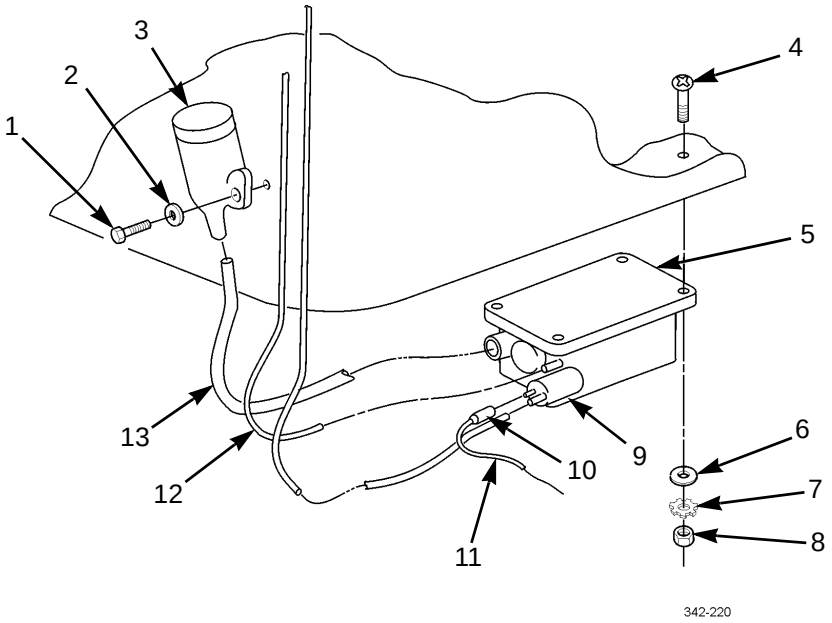

END OF WORK PACKAGE

WINDSHIELD WIPER AND WIPER ARM REPLACEMENT 0280 00

THIS WORK PACKAGE COVERS

Removal, Installation

INITIAL SETUP

Tools and Special Tools

Tool kit, general mechanic's (Item 50, WP 0306 00)

NOTE

Left and right windshield wipers and wiper arms are replaced the same way.

REMOVAL

1. Remove nut (1), screw (2), and windshield wiper (3) from wiper arm (4).
2. Disconnect hose (5) from wiper arm (4).
3. Remove cap nut (6), washer (7), and wiper arm (4) from shaft (8).

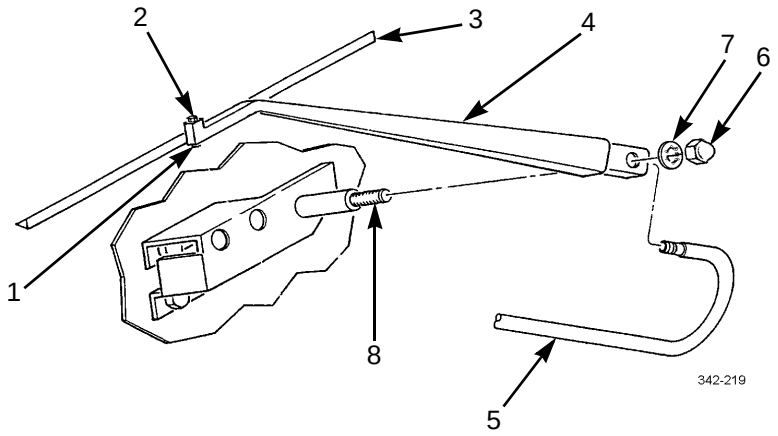

INSTALLATION

1. Install wiper arm (4) on shaft (8) with washer (7) and cap nut (6).
2. Install hose (5) on wiper arm (4).
3. Install windshield wiper (3) on wiper arm (4) with screw (2) and nut (1).

END OF WORK PACKAGE

VEHICLE JACK MOUNTING BRACKET REPLACEMENT 0281 00

THIS WORK PACKAGE COVERS

Removal, Installation

INITIAL SETUP

Tools and Special Tools

Tool kit, general mechanic's (Item 50, WP 0306 00)

Materials/Parts

Compound, caulking (Item 10, WP 0305 00)

Equipment Condition

BII removed from box (TM 9-2320-302-10)

REMOVAL

1. Remove caulking compound from nuts and screws.
2. Remove nut (10), two washers (6), screw (5), and latch (12) from jack storage location.
3. Remove nut (7), screw (11), two washers (8), and bracket (9) from storage box (1).
4. Remove two nuts (13), four washers (2), two screws (3), and vehicle jack mounting bracket (4) from storage box (1).

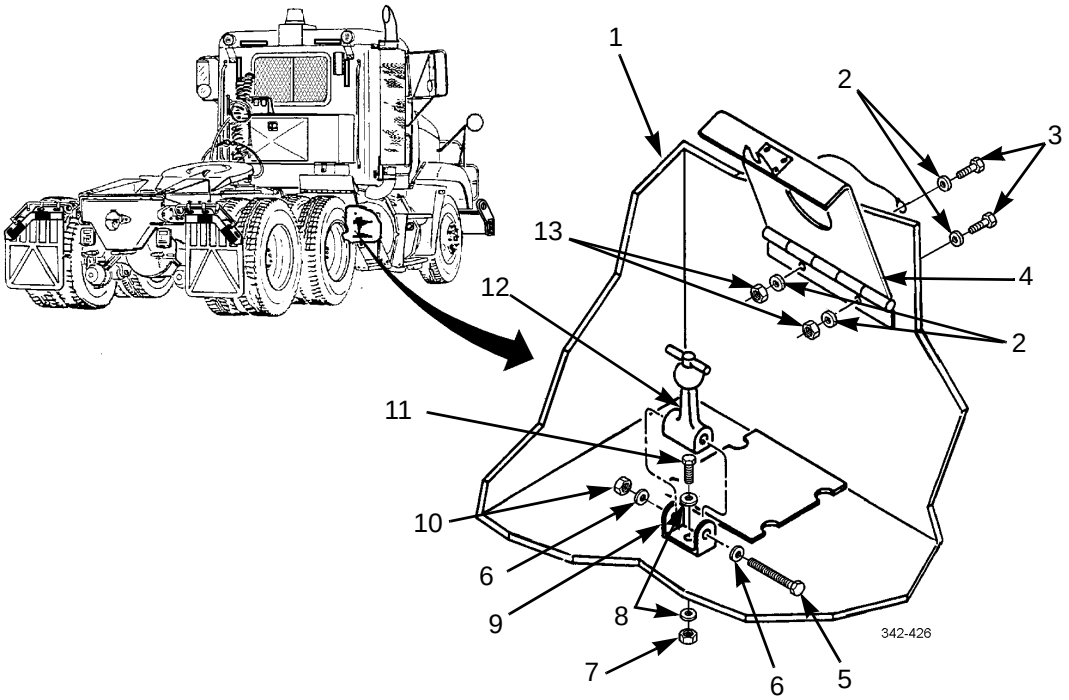

INSTALLATION

1. Install vehicle jack mounting bracket (4) on storage box (1) with two screws (3), four washers (2), and two nuts (13). Coat nuts with caulking compound.
2. Install bracket (9) on storage box (1) with screw (11), two washers (8), and nut (7). Coat screw with caulking compound.
3. Insert latch (12) and secure on bracket (9) with screw (5), two washers (6), and nut (10). Coat nut with caulking compound.
4. Place BII in storage box (TM 9-2320-302-10).

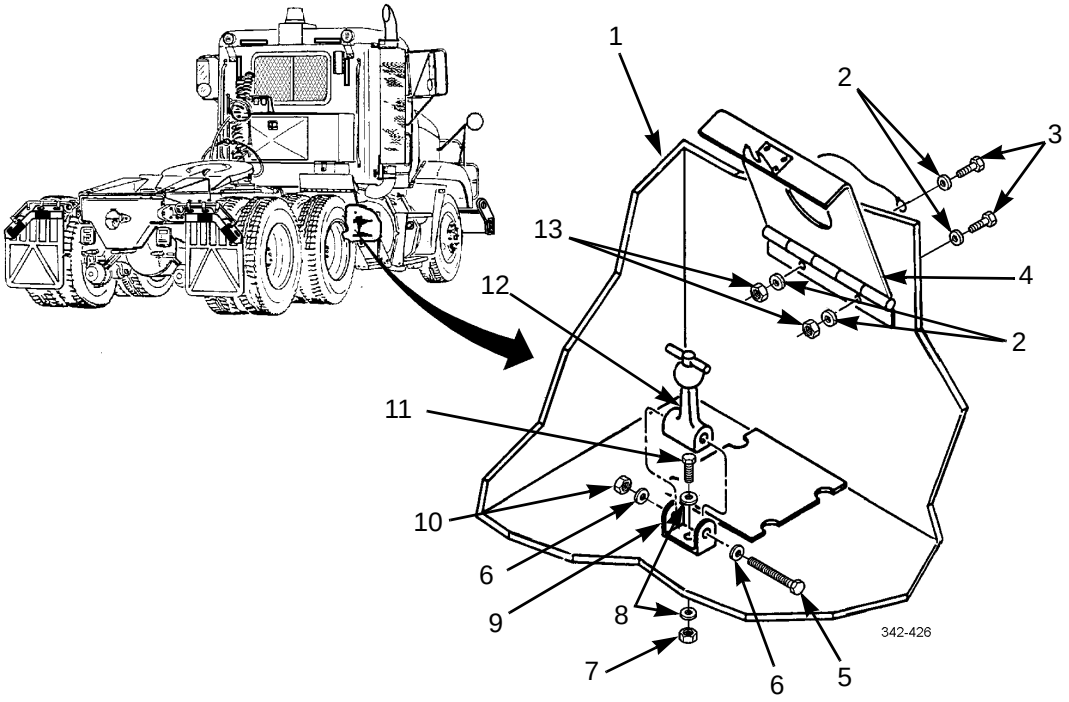

END OF WORK PACKAGE

AIR HORN AND VALVE REPLACEMENT 0282 00

THIS WORK PACKAGE COVERS

Air Horn Removal, Air Horn Valve Removal, Air Horn Valve Installation, Air Horn Installation

INITIAL SETUP

Tools and Special Tools

Tool kit, general mechanic's (Item 50, WP 0306 00)

Materials/Parts

Compound, sealing, pipe (Item 13, WP 0305 00)

Tags, marker (Item 34, WP 0305 00)

Nut, lock (P/N M45913/1-4CG5C) (3)

References

TM 9-2320-302-10

Equipment Condition

Air system drained (TM 9-2320-302-10)

Head liners removed from cab (WP 0264 00)

Cab overhead storage compartment removed (WP 0265 00)

AIR HORN REMOVAL

1. Remove two locknuts (3), screws (7), and two washers (6) securing air horn (8) in place. Discard locknuts.
2. Separate air horn (8) from cab floor (4) and bracket (11).
3. Remove air tube (1), elbow (2), and nipple (5) from air horn (8).
4. Remove locknut (12), screw (9), two washers (10), and bracket (11) from plate (15). Discard locknut.
5. If damaged, remove nut (16), screw (13), washer (14), and plate (15) from cab floor (4).

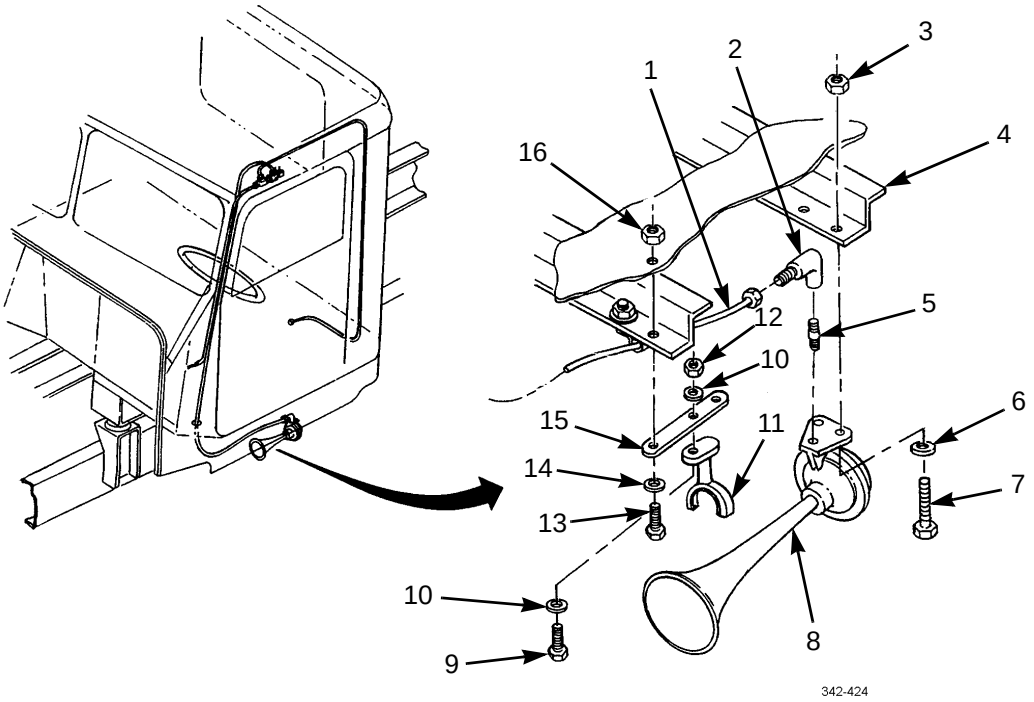

AIR HORN VALVE REMOVAL

1. Release end of pull cord (22) from cab (20).
2. Remove screw (24) and clamp loop (23) from cab (20). Remove clamp loop from pull cord (22).

NOTE

Tag tubes to aid in installation.

3. Disconnect three tubes (17) and remove tee (25) and elbow (18) from valve (19).
4. Remove two screws (21) and valve (19) from cab (20).

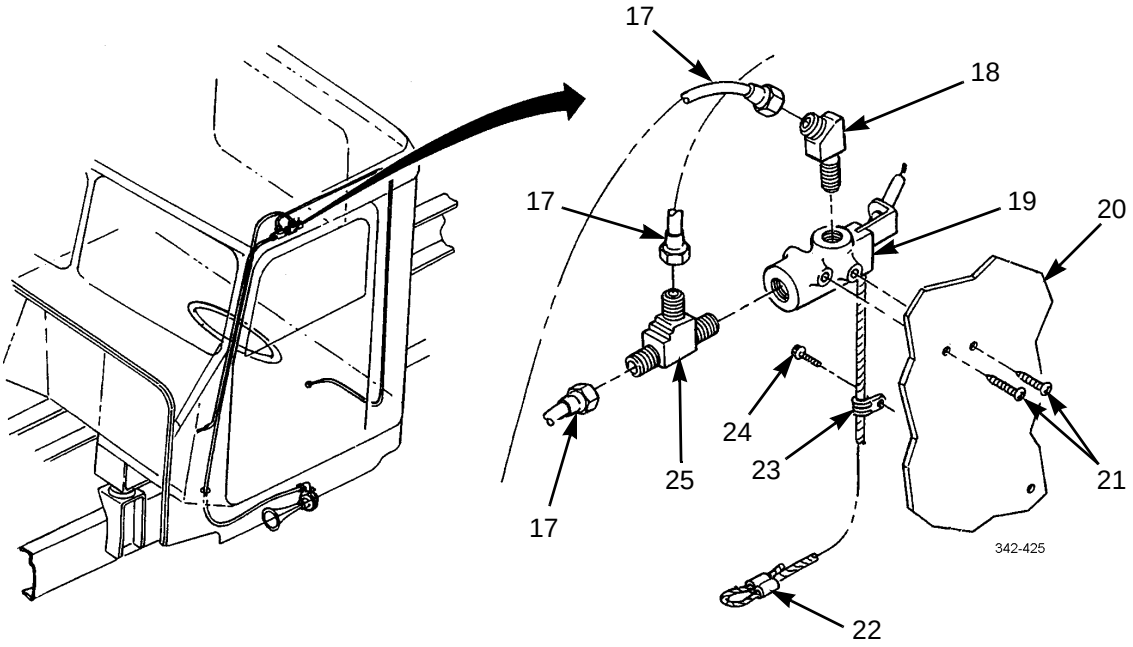

AIR HORN VALVE INSTALLATION

WARNINGS

Adhesives and sealing compounds can burn easily, can give off harmful vapors, and are harmful to skin and clothing. To avoid injury or death, keep away from open fire and use in a well-ventilated area. If adhesives or sealing compound contacts skin or clothing, wash immediately with soap and water.

1. Apply a light coat of pipe sealing compound to threads of elbow (18) and tee (25).

NOTE

Ensure valve is properly positioned to allow for mounting on cab.

AIR HORN VALVE INSTALLATION - CONTINUED

2. Install tee (25) and elbow (18) on valve (19) and connect three tubes (17) to fittings.
3. Install valve (19) to cab (20) and secure with two screws (21).
4. Attach pull cord (22) with clamp loop (23) to valve (19) and secure clamp loop to cab (20) with screw (24).

AIR HORN INSTALLATION

1. If removed, install plate (15) to cab floor (4) with washer (14), screw (13), and nut (16).
2. Install bracket (11) to plate (15) with two washers (10), screw (9) and new locknut (12).

WARNINGS

Adhesives and sealing compounds can burn easily, can give off harmful vapors, and are harmful to skin and clothing. To avoid injury or death, keep away from open fire and use in a well-ventilated area. If adhesives or sealing compound contacts skin or clothing, wash immediately with soap and water.

3. Apply pipe sealing compound to nipple (5) and install nipple, elbow (2), and air tube (1) to air horn (8).
4. Position air horn (8) to bracket (11) and cab floor (4).
5. Secure air horn (8) in place with two washers (6), two screws (7) and new locknuts (3).

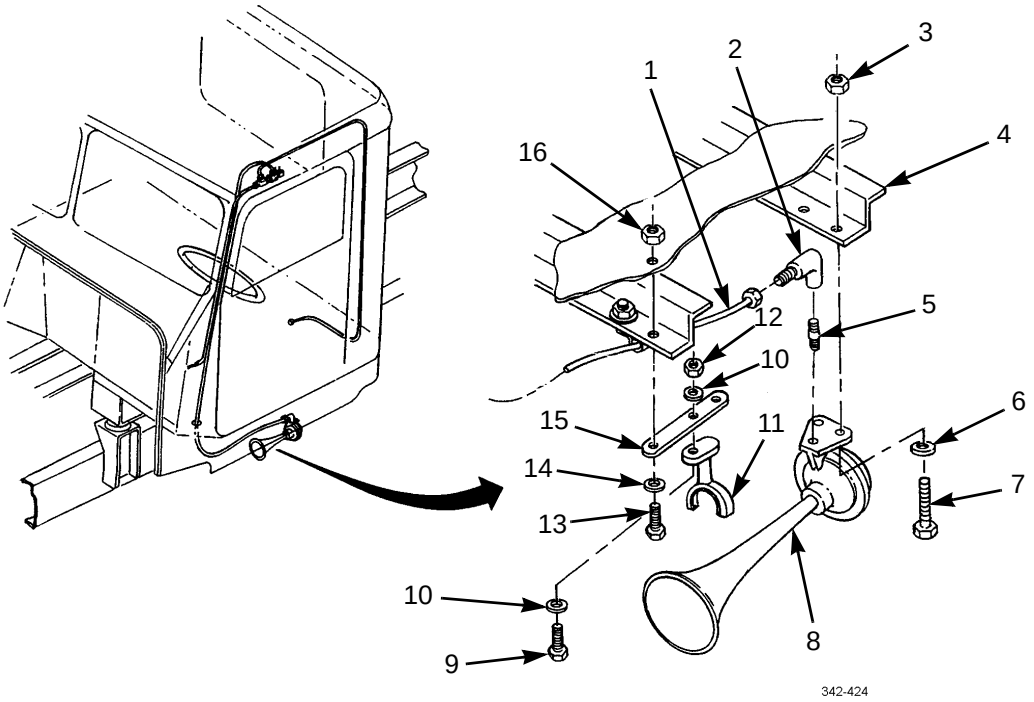

6. Start vehicle and check for leaks in air system and operation of air horn (TM 9-2320-302-10).
7. Install cab head liners (WP 0264 00).

AIR HORN INSTALLATION - CONTINUED

8. Install cab overhead storage compartment (WP 0265 00).

END OF WORK PACKAGE

DATA AND INSTRUCTION PLATES REPLACEMENT 0283 00

THIS WORK PACKAGE COVERS

Removal, Installation

INITIAL SETUP

Tools and Special Tools

Tool kit, general mechanic's (Item 50, WP 0306 00)

Drill, electric, portable (Item 9, WP 0306 00)

Drill set, twist (Item 10, WP 0306 00)

Riveter, blind, hand (Item 38, WP 0306 00)

NOTE

All data and instruction plates are replaced the same way.

REMOVAL

CAUTION

- If drilling in door panel, ensure that window is rolled up. Failure to do so could result in damage to window.
- If drilling in dashboard panel, ensure panel is removed from dashboard. Failure to do so could result in damage to heating ducts.

Remove four rivets (1) and plate (2).

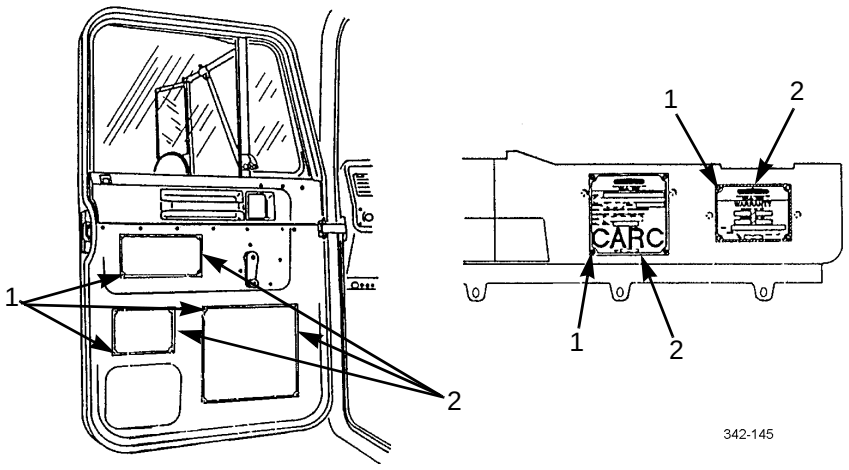

INSTALLATION

NOTE

If installing plate on new panel, use illustration for location of drill holes.

Install plate (2) with four rivets (1).

END OF WORK PACKAGE

M16 RIFLE MOUNTING BRACKET REPLACEMENT (M915A3 OLD MODEL) 0284 00

THIS WORK PACKAGE COVERS

Removal, Installation

INITIAL SETUP

Tools and Special Tools

Tool kit, general mechanic's (Item 50, WP 0306 00)

REMOVAL

1. Remove four nuts (1), two catch bracket assemblies (2), four cap screws (4), and washers (3) from rifle mounting bracket (13).
2. Remove four cap screws (5), washers (6), eight washers (7), four nuts (9), and two rifle mounting supports (8) from rifle mounting bracket (13).
3. Remove two nuts (10), four washers (11), two cap screws (12), and rifle mounting bracket (13).

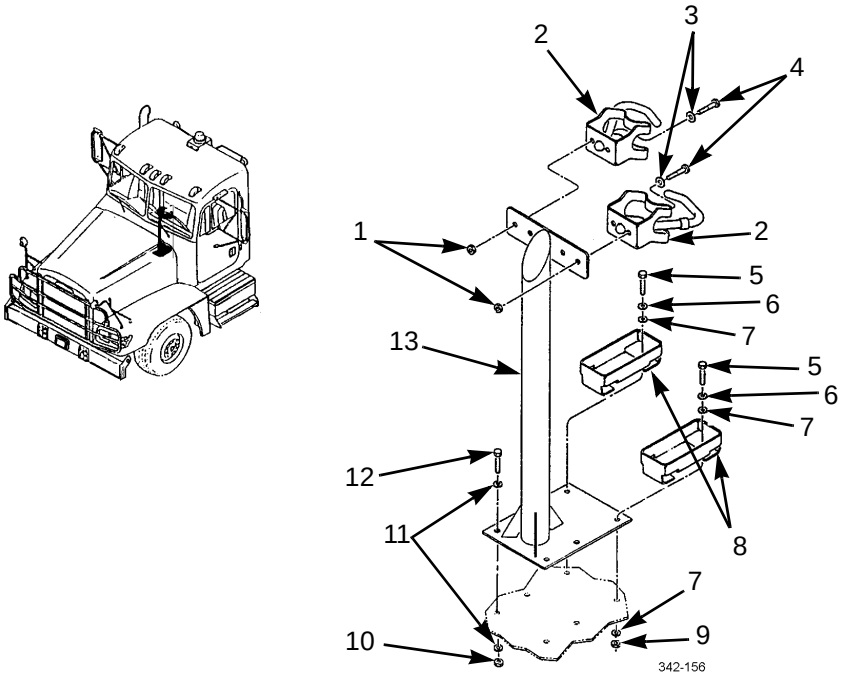

INSTALLATION

1. Install rifle mounting bracket (13) with four washers (11), two cap screws (12), and nuts (10).
2. Install two rifle mounting supports (8) on rifle mounting bracket (13) with eight washers (7), four washers (6), cap screws (5), and nuts (9).
3. Install two catch bracket assemblies (2) on rifle mounting bracket (13) with four washers (3), cap screws (4), and nuts (1).

END OF WORK PACKAGE

M16 RIFLE MOUNTING BRACKET REPLACEMENT (M915A3 NEW MODEL, M916A3, M917A2) 0285 00

THIS WORK PACKAGE COVERS

Removal, Installation

INITIAL SETUP

Tools and Special Tools

Tool kit, general mechanic's (Item 35, WP 0306 00)

NOTE

There are two M16 rifle mounting brackets between the seats. Both are removed and installed in the same manner.

REMOVAL

1. Remove two screws (1), two washers (2) and bracket (3) from cab wall (4).
2. Remove two screws (7), two washers (8), and bracket (5) from cab floor (6).

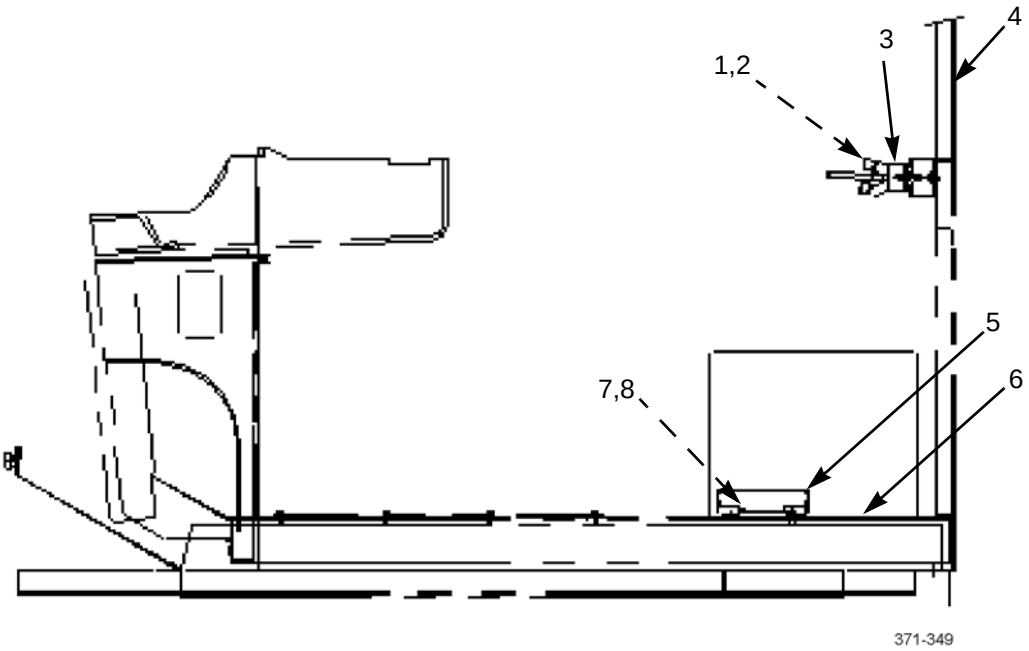

INSTALLATION

1. Install bracket (5) on cab floor (6) with two washers (8) and two screws (7).
2. Install bracket (3) on cab wall (4) with two washers (2) and two screws (1).

END OF WORK PACKAGE

CUP HOLDER REPLACEMENT 0286 00

THIS WORK PACKAGE COVERS

Removal, Installation

INITIAL SETUP

Tools and Special Tools

Tool kit, general mechanic's (Item 50, WP 0306 00)

REMOVAL

1. Remove two screws (7), flat washers (8), and L/H cup holder (6) from dash (1).
2. Remove screw (2), flat washer (3), and R/H cup holder (5) from swivel (4).
3. Remove swivel (4) from dash (1).

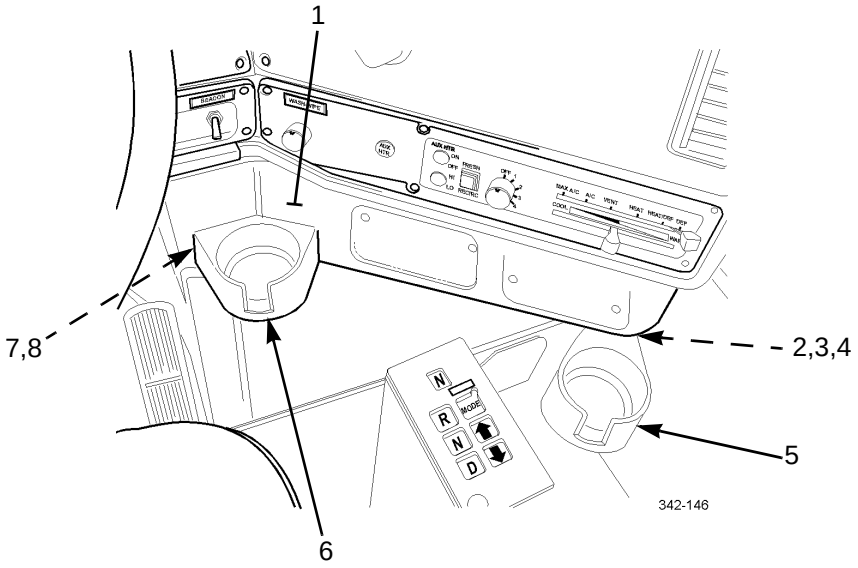

INSTALLATION

1. Install L/H cup holder (6) on dash (1) with two flat washers (8) and screws (7).
2. Install swivel (4) on dash (1).
3. Install R/H cup holder (5) on swivel (4) with flat washer (3) and screw (2). Ensure R/H cup holder rotates freely.

END OF WORK PACKAGE

CAB ROOF AIR DEFLECTOR REPLACEMENT (M915A3, M916A3) 0287 00

THIS WORK PACKAGE COVERS

Air Deflector Removal, Mounting Hardware Removal, Mounting Hardware Installation, Air Deflector Installation

INITIAL SETUP

Tools and Special Tools

Tool kit, general mechanic's (Item 50, WP 0306 00)

Wrench set, socket attachment (Item 61, WP 0306 00)

Materials/Parts

Nut, lock (P/N RUDAP691) (6)

Washer, lock (P/N RUDAP696) (8)

Personnel Required

Two

Equipment Condition

Head liners removed (WP 0264 00)

AIR DEFLECTOR REMOVAL

Remove eight nuts (2), lockwashers (3), screws (4), and air deflector (1) from vehicle. Discard lockwashers.

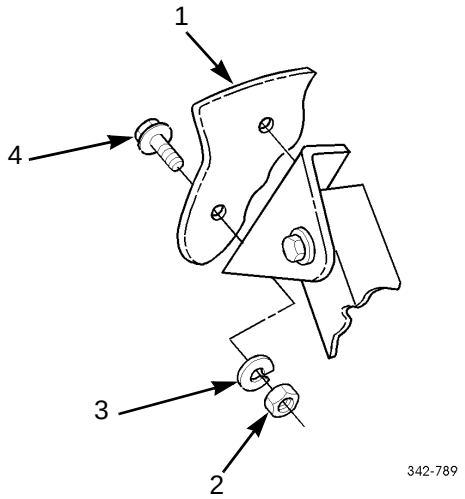

MOUNTING HARDWARE REMOVAL

NOTE

Perform steps 1 through 6 at each side of cab roof.

1. Remove locknut (9), two washers (6), screw (5), and top pivot bracket (7) from strut (8). Discard locknut.

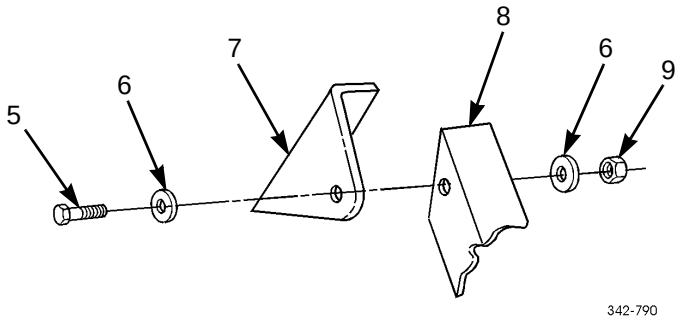

2. Remove locknut (16), two washers (14), screw (15), and strut (8) from channel (11). Discard locknut.
3. Remove nut (13), washer (12) and screw (10) and channel (11) from support bracket (17).
4. Remove two nuts (21), reinforcing plate (20), gasket (19), two screws (18), and support bracket (17) from rear of cab roof.

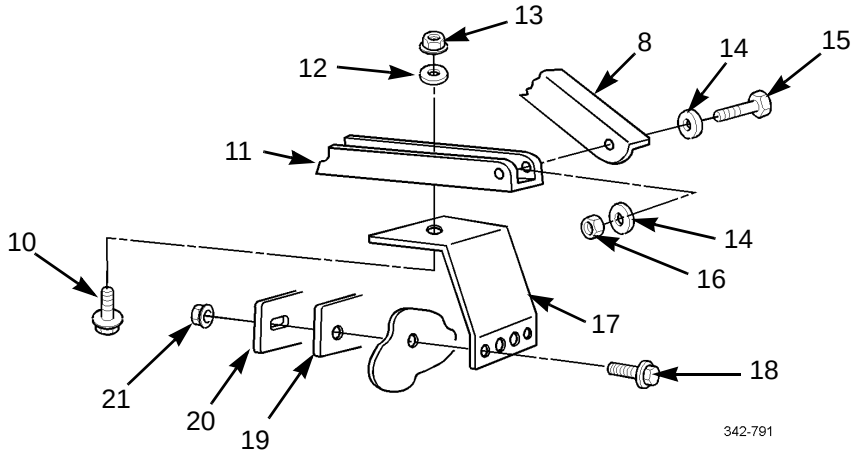

MOUNTING HARDWARE REMOVAL - CONTINUED

5. Remove two nuts (23), screws (22), channel (11), swivel spacers (26), swivel plates (25), and rubber seals (24) from cab roof.

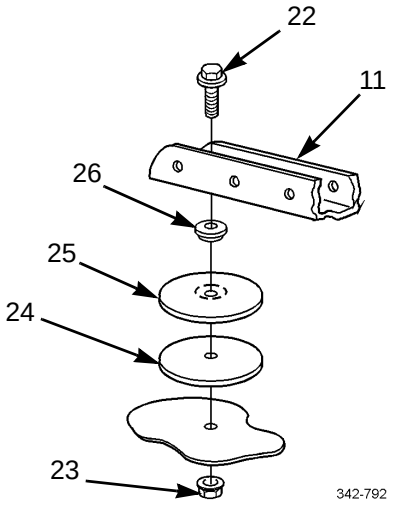

6. Remove locknut (27), two washers (28), screw (30), and bottom pivot bracket (29) from channel (11). Discard locknut.

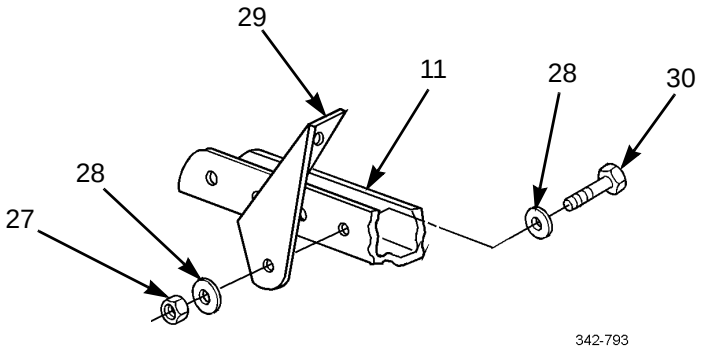

MOUNTING HARDWARE INSTALLATION

NOTE

Perform steps 1 through 6 at each side of cab roof.

1. Install bottom pivot bracket (29) on third hole from front of channel (11) with screw (30), two washers (28), and new locknut (27).

MOUNTING HARDWARE INSTALLATION

2. Install two rubber seals (24), swivel plates (25), swivel spacers (26), and channel (11) on cab roof with two screws (22) and nuts (23).

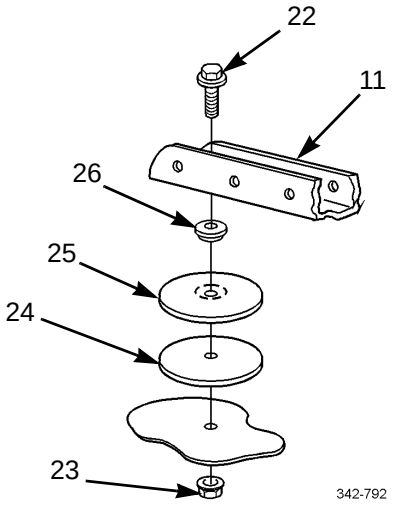

3. Install support bracket (17), gasket (19), and reinforcing plate (20) on rear of cab roof with two screws (18) and nuts (21).
4. Install channel (11) on support bracket (17) with screw (10), washer (12), and nut (13).

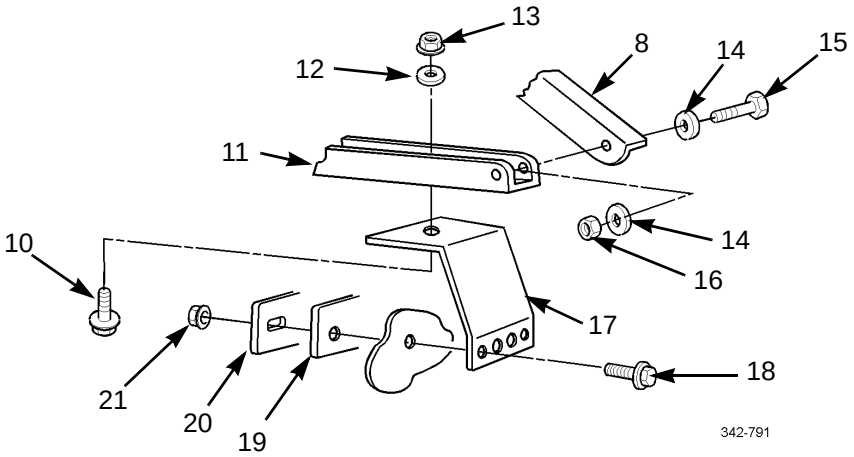

MOUNTING HARDWARE INSTALLATION - CONTINUED

5. Install strut (8) on rear hole of channel (11) with screw (15), two washers (14), and new locknut (16).
6. Install top pivot bracket (7) on strut (8) with screw (5), two washers (6), and new locknut (9).

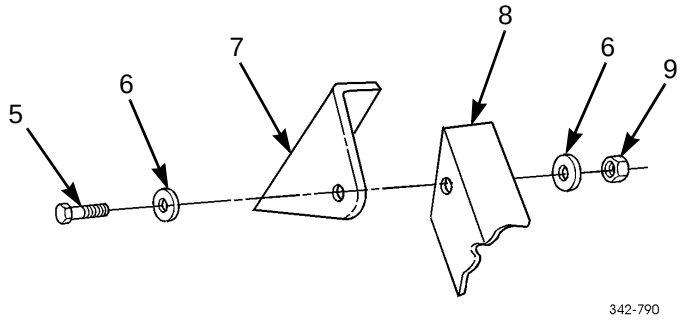

AIR DEFLECTOR INSTALLATION

1. Install air deflector (1) on vehicle with eight screws (4), new lockwashers (3) and nuts (2).

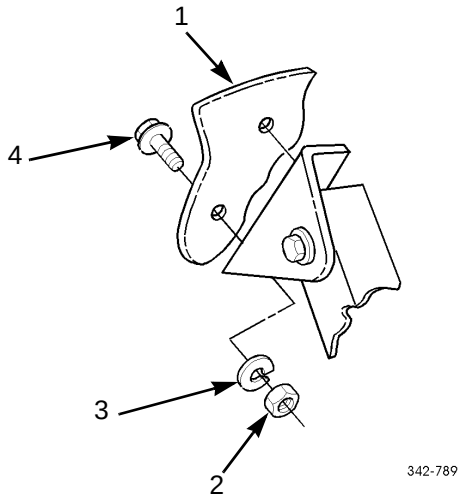

2. Install head liners (WP 0264 00).

END OF WORK PACKAGE

HVAC AIR CYLINDER REPLACEMENT 0288 00

THIS WORK PACKAGE COVERS

Removal, Installation

INITIAL SETUP

Tools and Special Tools

Tool kit, general mechanic's (Item 50, WP 0306 00)

Materials/Parts

Nut, push (P/N BOA 702011 00)

Nut, push (P/N BOA 707014 00)

References

TM 9-2320-302-10

REMOVAL

1. Place heater/air conditioner slide lever in "DEF" position (TM 9-2320-302-10).
2. Remove screws (1) securing dash panel (2) in place.

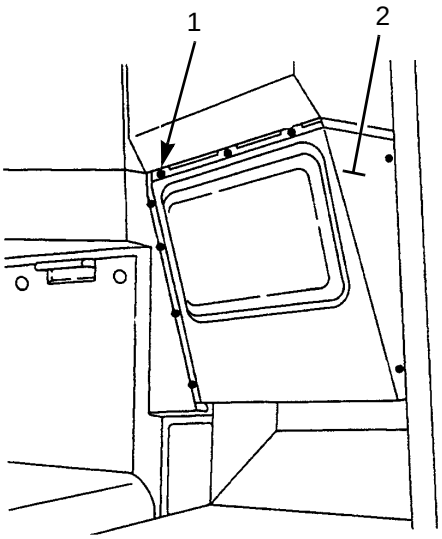

342-412

REMOVAL - CONTINUED

3. Push in on cover ring (4) and pull out on air line (3) to disconnect from air cylinder (7).
4. Remove push nuts (5 and 8) and air cylinder (7) from mounting rods (6). Discard push nuts.
5. Inspect flap, rod, and bushing and replace as necessary.

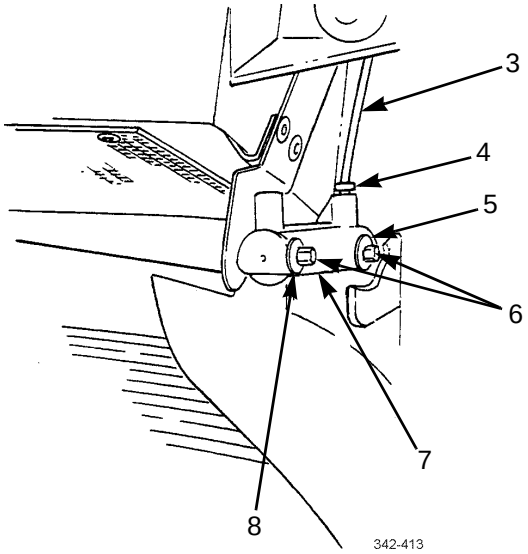

INSTALLATION

1. Slide air cylinder (7) on mounting rods (6) and secure with new push nuts (5 and 8).
2. Install air line (3) by pushing air line into cover ring (4) as far as possible. Pull back carefully on air line to lock in place.
3. Start vehicle and verify air cylinder (7) is functioning properly (TM 9-2320-302-10).
4. Install dash cover (2) with screws (1).

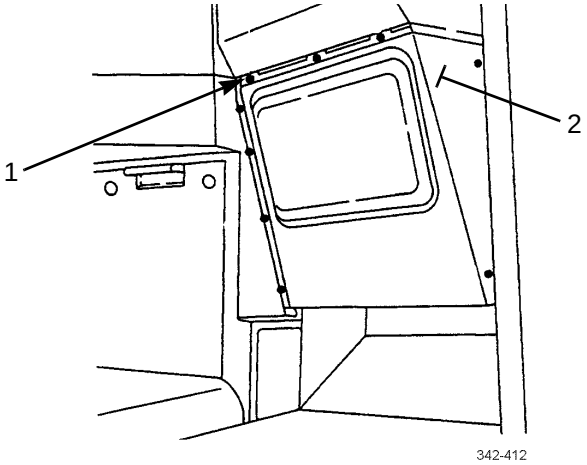

END OF WORK PACKAGE

HVAC BLOWER MOTOR REPLACEMENT 0289 00

THIS WORK PACKAGE COVERS

Removal, Installation

INITIAL SETUP

Tools and Special Tools

Tool kit, general mechanic's (Item 50, WP 0306 00)

References

TM 9-2320-302-10

Equipment Condition

Master battery switch in OFF position (TM 9-2320-302-10)

Dash panel access cover removed (WP 0288 00)

REMOVAL

1. Remove five screws (2) and blower motor cover (3).
2. Disconnect blower motor harness connector (4) from vehicle wiring harness receptacle (1).

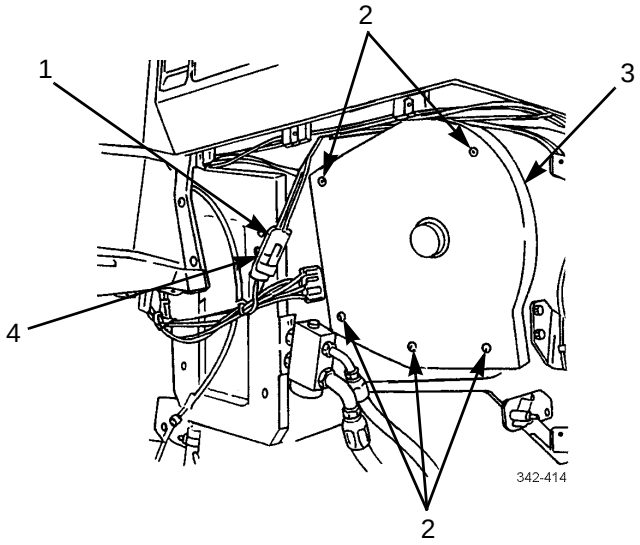

REMOVAL - CONTINUED

3. Remove three screws (6) and blower motor (5) from housing (7).

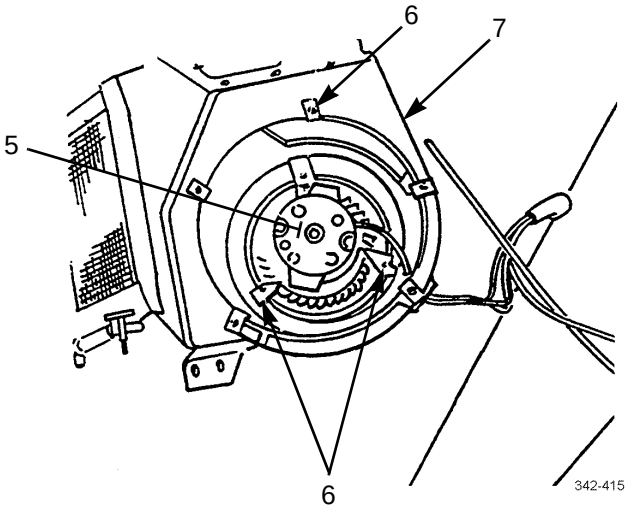

INSTALLATION

1. Install blower motor (5) on housing (7) with three screws (6).
2. Connect blower motor harness connector (4) to vehicle wiring harness receptacle (1).
3. Start vehicle and check blower operation (TM 9-2320-302-10).
4. Install blower motor cover (3) with five screws (2).

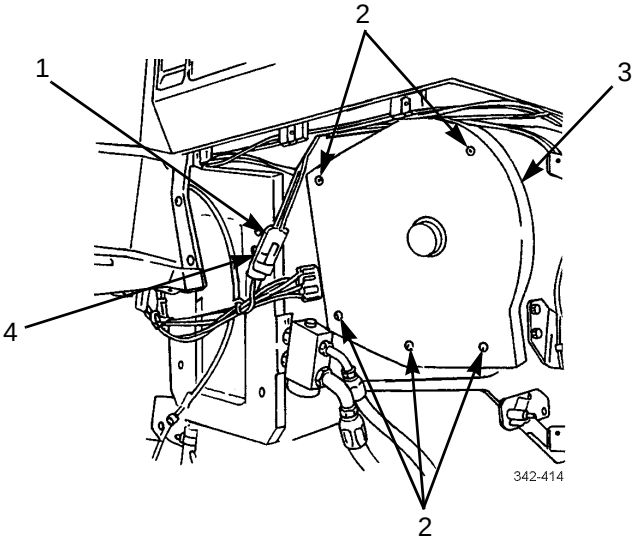

5. Install dash panel access cover (WP 0288 00).

END OF WORK PACKAGE

HVAC HEATER CORE REPLACEMENT 0290 00

THIS WORK PACKAGE COVERS

Removal, Installation

INITIAL SETUP

Tools and Special Tools

Tool kit, general mechanic's (Item 50, WP 0306 00)

Gloves (Item 13, WP 0306 00)

Materials/Parts

Rags, wiping (Item 31, WP 0305 00)

Tags, marker (Item 34, WP 0305 00)

References

TM 9-2320-302-10

Equipment Condition

Cooling system drained (WP 0046 00)

REMOVAL

1. Remove nine screws (1) and cover (2).
2. Remove three screws (4) and cover (3).

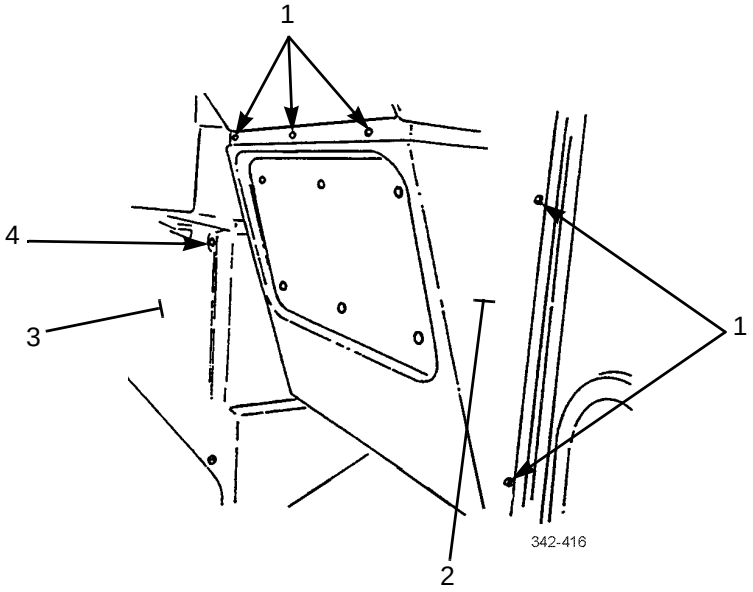

REMOVAL - CONTINUED

3. Remove two screws (5) and cover (6).

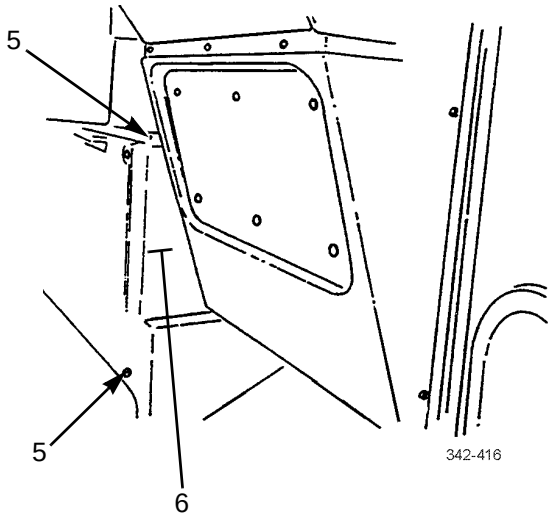

4. Remove five screws (7) and cover (8) from dash panel (9).

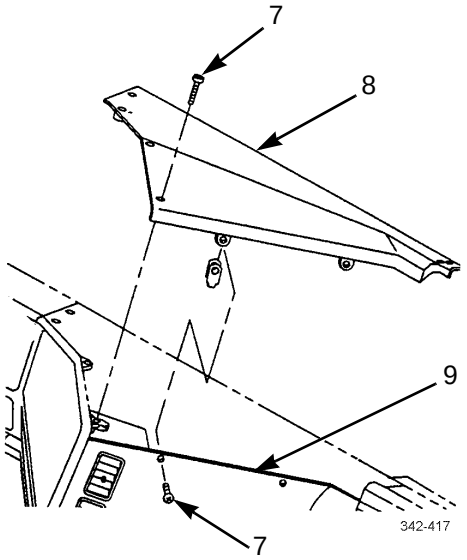

5. Open glove box door (13) and remove two screws (10) and top panel (11) from compartment (10).
6. Remove three nuts (14), spring washers (15) and compartment (12) from dash panel (9).
7. Disconnect and tag two flex hoses from ducts behind glove box.
8. Disconnect and tag air line from air cylinder behind glove box.

REMOVAL - CONTINUED

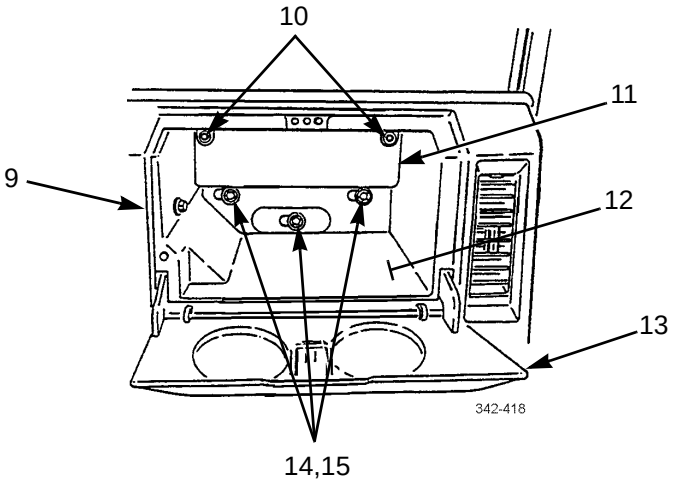

9. Place rags on cab floor, loosen two hose clamps (18), and tag and disconnect heater core hoses (17).
10. Remove four screws (19) and heater core cover (16).

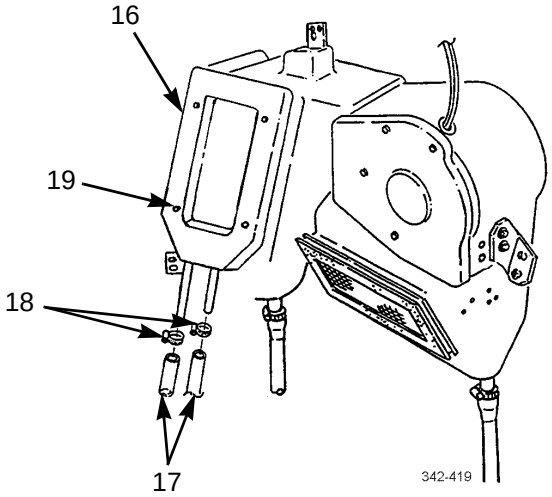

REMOVAL - CONTINUED

WARNING

Failure to wear protective gloves could result in serious skin cuts from sharp edges and fins.

11. Wearing protective gloves, slide heater core (20) with seal up and out of housing (21).

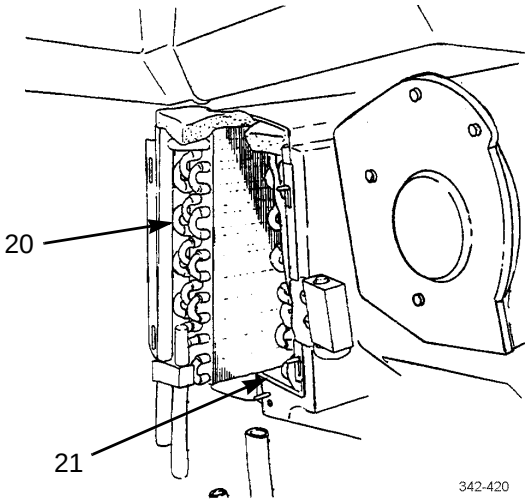

INSTALLATION

WARNING

Failure to wear protective gloves could result in serious skin cuts from sharp edges and fins.

1. Wearing protective gloves, slide heater core (20) with seal into housing (21).

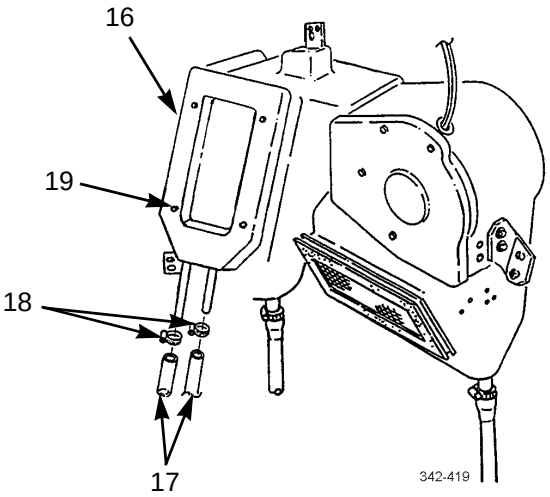

2. Install heater core cover (16) and secure with four screws (19).
3. Install heater core hoses (17) and tighten two clamps (18).

INSTALLATION - CONTINUED

4. Connect air line to cylinder behind glove box.

5. Connect two flex hoses to ducts behind glove box.

6. Fill cooling system (WP 0046 00).

7. Start vehicle and check operation of heater and air conditioner (TM 9-2320-302-10).

8. Insert compartment (12) into dash (9) and secure with three nuts (14) and spring washers (15).

9. Insert top panel (11) to compartment (12) and secure with two screws (10).

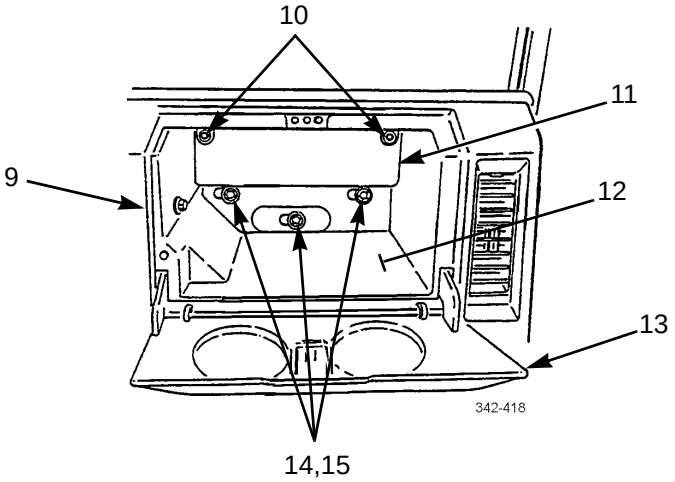

10. Position cover (8) on dash panel (9) and secure with five screws (7).

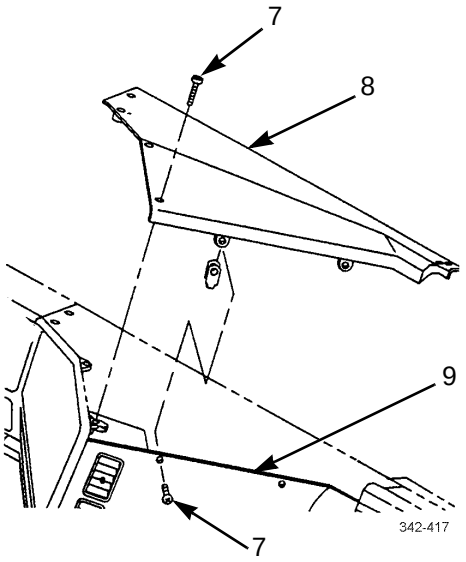

INSTALLATION - CONTINUED

11. Position cover (6) and secure with two screws (5).
12. Position cover (3) and secure with three screws (4).
13. Position cover (2) and secure with nine screws (1).

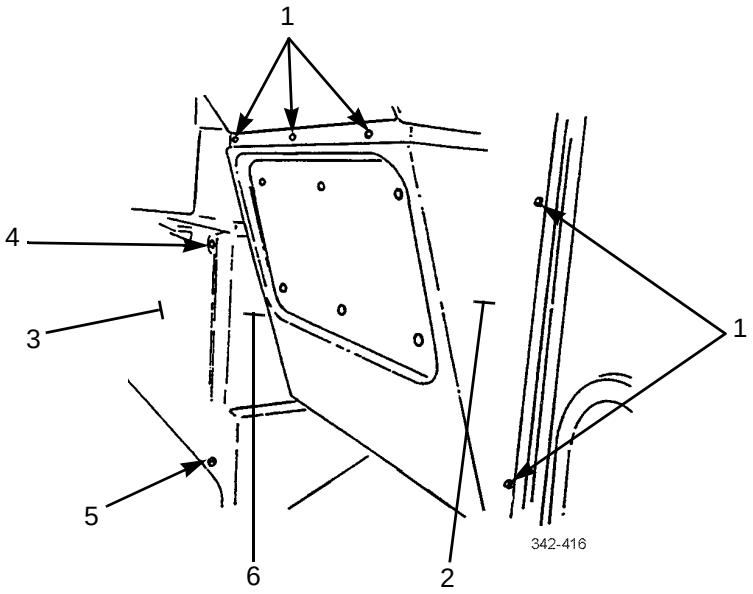

END OF WORK PACKAGE

AIR CONDITIONER RESISTOR BLOCK REPLACEMENT 0291 00

THIS WORK PACKAGE COVERS

Removal, Installation

INITIAL SETUP

Tools and Special Tools

Tool kit, general mechanic's (Item 50, WP 0306 00)

Materials/Parts

Tags, marker (Item 34, WP 0305 00)

References

TM 9-2320-302-10

Equipment Condition

Master battery switch in OFF position (TM 9-2320-302-10)

Dash panel access cover removed (WP 0288 00)

REMOVAL

NOTE

Tag wires to aid in installation.

1. Remove wiring harness connectors (3 and 4) from resistor block (2).
2. Remove two nuts (1) and resistor block (2).

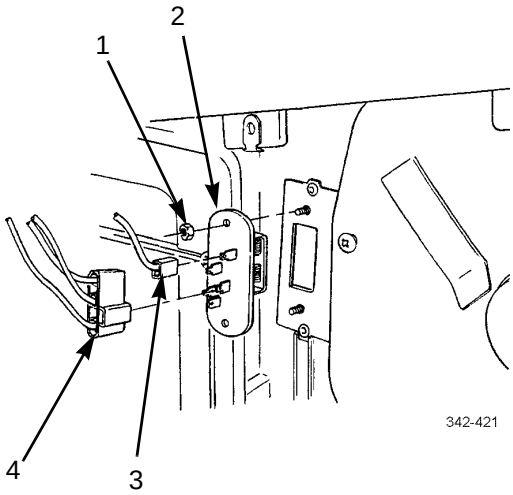

INSTALLATION

1. Install resistor block (2) with two nuts (1).
2. Install wiring harness connectors (3 and 4) on resistor block (3).
3. Start vehicle and check operation of air conditioner (TM 9-2320-302-10).
4. Install dash panel access cover (WP 0288 00).

END OF WORK PACKAGE

AIR CONDITIONER THERMOSTATIC SWITCH REPLACEMENT 0292 00

THIS WORK PACKAGE COVERS

Removal, Installation

INITIAL SETUP

Tools and Special Tools

Tool kit, general mechanic's (Item 50, WP 0306 00)

References

TM 9-2320-302-10

Equipment Condition

Master battery switch in OFF position (TM 9-2320-302-10)

Dash panel access cover removed (WP 0288 00)

REMOVAL

1. Disconnect wiring harness connector (5) from thermostatic switch (4).
2. Remove four screws (6) and heater core cover (1).

NOTE

Mark thermostatic switch sensor tube at entry point in evaporator to aid in installation.

3. Remove two screws (3) and thermostatic switch (4) with sensor tube (2) attached.

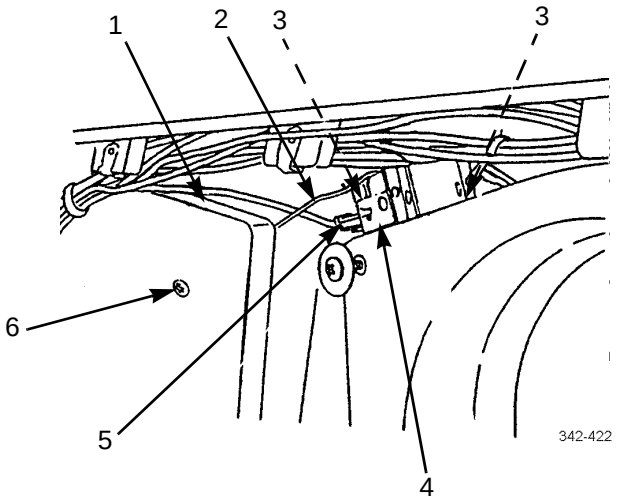

INSTALLATION

1. Transfer measurement from old sensor tube (2) to new sensor tube, if installing a new thermostatic switch (4).

CAUTION

Use care when installing thermostatic switch sensor tube in evaporator. Using too much force will cause tube to bend or kink.

2. Carefully insert sensor tube (2) into evaporator to a depth equal to mark on sensor tube.

INSTALLATION - CONTINUED

NOTE

Sensor tube must be in contact with evaporator coil fin and be at least 4 in (10 cm) in evaporator.

3. Install thermostatic switch (4) with two screws (3).
4. Install heater core cover (1) with four screws (6).
5. Connect wiring harness connector (5) to thermostatic switch (4).
6. Start vehicle and check operation of air conditioner (TM 9-2320-302-10).

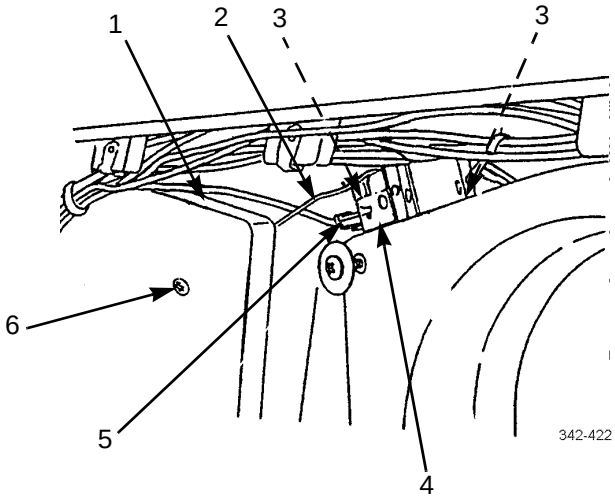

7. Install dash panel access cover (WP 0288 00).

END OF WORK PACKAGE

AIR CONDITIONER BINARY SWITCH REPLACEMENT 0293 00

THIS WORK PACKAGE COVERS

Removal, Installation

INITIAL SETUP

Tools and Special Tools

Tool kit, general mechanic's (Item 50, WP 0306 00)

Wrench, torque, 0-200 lb-in (Item 55, WP 0306 00)

Materials/Parts

Oil, lubricating, refrigerant (Item 29, WP 0305 00)

Packing, preformed (P/N AS568-011AMS3209)

References

TM 9-2320-302-10

Equipment Condition

Hood opened (TM 9-2320-302-10)

Master battery switch in OFF position (TM 9-2320-302-10)

REMOVAL

1. Disconnect harness connector (2) from binary switch (3).
2. Remove binary switch (3) and preformed packing (4) from receiver-dryer (1). Discard preformed packing.

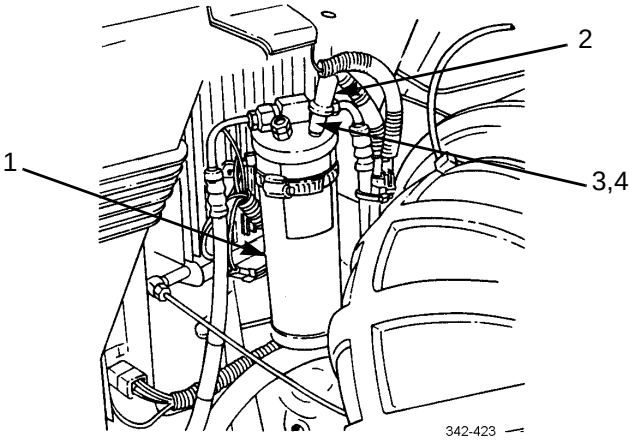

INSTALLATION

1. Lightly coat new preformed packing (4) with refrigerant lubricating oil. Install preformed packing on threads of receiver-dryer (1) coupling.
2. Install binary switch (3) and tighten to 108 lb-in (1220 Ncm).
3. Connect harness connector (2) to binary switch (3).
4. Close hood (TM 9-2320-302-10).
5. Start vehicle and check operation of air conditioner (TM 9-2320-302-10).

END OF WORK PACKAGE

AIR CONDITIONER FAN CYCLING SWITCH REPLACEMENT 0294 00

THIS WORK PACKAGE COVERS

Removal, Installation

INITIAL SETUP

Tools and Special Tools

Tool kit, general mechanic's (Item 50, WP 0306 00)

Wrench, torque, 15-75 lb-ft (Item 57, WP 0306 00)

Materials/Parts

Oil, refrigerant (Item 29, WP 0305 00)

Rags, wiping (Item 31, WP 0305 00)

References

TM 9-2320-302-10

Equipment Condition

Hood opened (TM 9-2320-302-10)

Master battery switch in OFF position (TM 9-2320-302-10)

REMOVAL

1. Disconnect harness connector (1) from fan cycling switch (4).
2. Unscrew fan cycling switch (4) from coupling (3) on receiver-dryer (2). Remove and discard preformed packing.

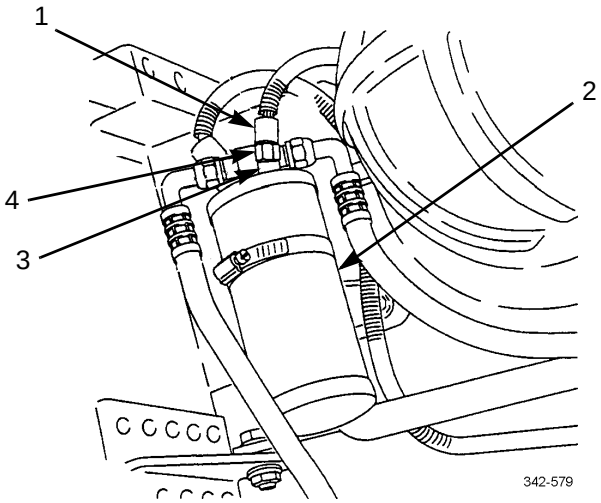

INSTALLATION

1. Lubricate new preformed packing with refrigerant oil and install over male threads of coupling (3) on receiver-dryer (2).
2. Screw fan cycling switch (4) into coupling (3). Tighten switch to 20-25 lb-ft (27-34 Nm).
3. Connect harness connector (1) to fan cycling switch (4).
4. Close hood (TM 9-2320-302-10).
5. Start vehicle and check operation of air conditioner (TM 9-2320-302-10).

END OF WORK PACKAGE

AIR CONDITIONER SYSTEM LEAK TEST 0295 00

THIS WORK PACKAGE COVERS

Inspection, Test

INITIAL SETUP

Tools and Special Tools

Tool kit, general mechanic's (Item 50, WP 0306 00)

Gloves, chemical (Item 13, WP 0306 00)

Tools and Special Tools - Continued

Goggles (Item 14, WP 0306 00)

Leak detector, refrigerant (Item 25, WP 0306 00)

INSPECTION

WARNING

- Liquid refrigerant, when exposed to air, quickly evaporates and will freeze skin or eye tissue. Use care to prevent refrigerant from touching your skin or eyes. Serious injury or blindness may result if you come in contact with liquid refrigerant.
- Refrigerant R-134a air conditioning systems should not be pressure tested or leak tested with compressed air. Combustible mixtures of air and R-134a may form, resulting in fire or explosion, which could cause personal injury.

NOTE

- Refrigerant is odorless. As a result, all of it may leak away and not be noticed until system stops cooling. All vehicle refrigerant systems lose some refrigerant depending on the condition of system. Higher loss rates signal a need to locate and repair leaks.
- Leaks are most often found at the compressor hose connections and at various fittings and joints in system. If unapproved replacement hoses are installed, refrigerant can be lost through hose permeation.

1. Visually inspect refrigerant system for air conditioning lubricant leakage and corrosion and damage to lines, hoses, and other components.
2. Visually inspect lowest points of fittings, hoses, and lines for indication of lubricant leakage.

TEST

Use a leak detector in accordance with the manufacturer's instruction manual and check for refrigerant leakage at hose connections, fittings, and areas where leakage might occur. If leaks are detected, notify Direct Support Maintenance.

END OF WORK PACKAGE

AIR CONDITIONER COMPRESSOR MAGNETIC CLUTCH REPLACEMENT 0296 00

THIS WORK PACKAGE COVERS

Removal, Installation

INITIAL SETUP

Tools and Special Tools

Tool kit, general mechanic's (Item 50, WP 0306 00)

Holder, clutch (Item 18, WP 0306 00)

Puller kit, universal (Item 37, WP 0306 00)

Wrench, torque, 0-200 lb-in (Item 55, WP 0306 00)

Wrench, torque, 15-75 lb-ft (Item 57, WP 0306 00)

References

TM 9-2320-302-10

Equipment Condition

Alternator belt removed (WP 0062 00 or WP 0063 00)

REMOVAL

1. Using clutch holding tool to keep pulley from rotating, remove retaining bolt (1) and washer (2) from center of pulley rotor assembly (3).

CAUTION

DO NOT try to remove pulley rotor assembly by prying or hammering. Failure to follow this caution could result in equipment damage.

NOTE

Use a 5/8-11 bolt that is long enough to serve as clutch remover.

2. Install puller kit bolt in hub of pulley rotor assembly (3).

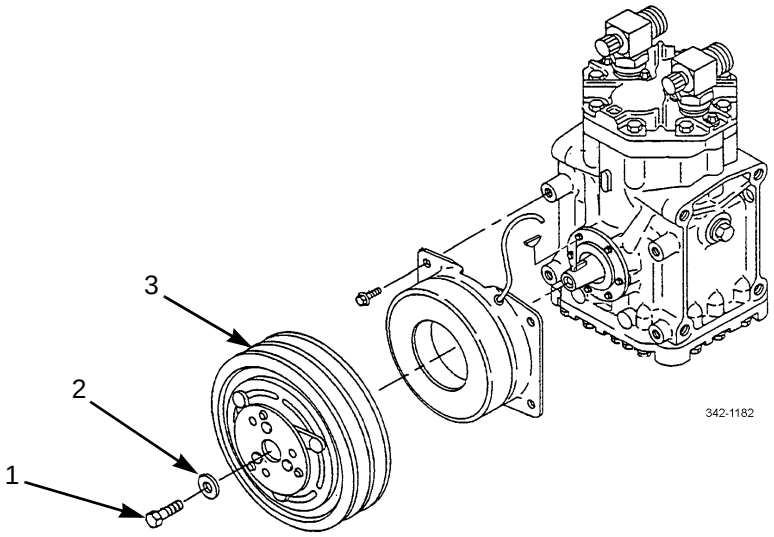

REMOVAL - CONTINUED

3. Tighten puller kit bolt to remove pulley rotor assembly (3) from compressor shaft (8). Remove woodruff key (6) from compressor shaft. Retain woodruff key for later use.
4. Remove field coil electrical lead (5).
5. Remove four bolts (4) and field coil assembly (9) from compressor (7).

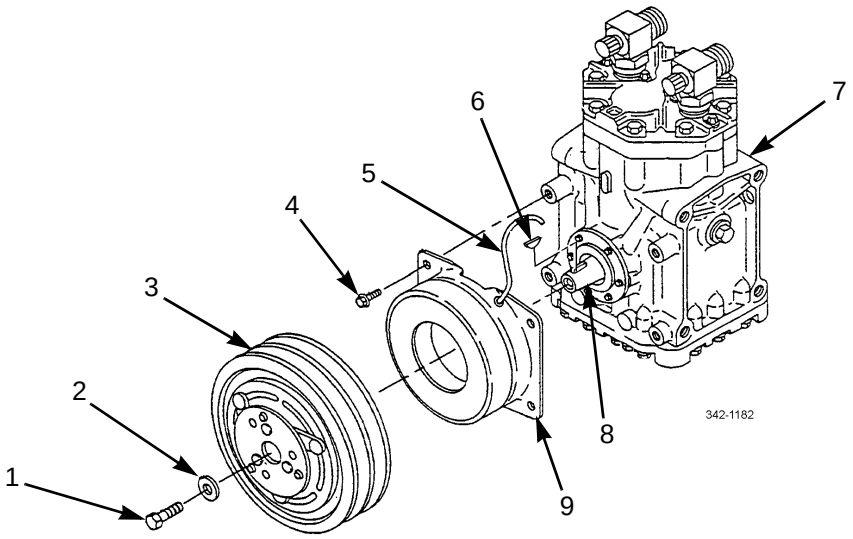

INSTALLATION

1. Install field coil assembly (9) on compressor (7) with four bolts (4). Tighten bolts to 96 lb-in (1084 Ncm).
2. Install woodruff key (6) and pulley rotor assembly (3) on compressor shaft (8) taking care to properly align and seat shaft and hub keyways.
3. Install washer (2) and retaining bolt (1) on pulley rotor assembly (3). Using clutch holding tool to keep pulley from rotating, tighten retaining bolt to 20 lb-ft (27 Nm).
4. Turn pulley rotor assembly (3) by hand to ensure that assembly moves freely without interference with field coil assembly (9).
5. Install field coil electrical lead (5).
6. Verify clutch engages when proper voltage is applied.
7. Install alternator belt (WP 0062 00 or WP 0063 00).
8. Start vehicle and check operation of air conditioner (TM 9-2320-302-10).

END OF WORK PACKAGE

M13 DECONTAMINATION KIT MOUNTING BRACKET REPLACEMENT 0297 00

THIS WORK PACKAGE COVERS

Removal, Installation

INITIAL SETUP

Tools and Special Tools

Tool kit, general mechanic's (Item 50, WP 0306 00)

Wrench, torque, 15-75 lb-ft (Item 57, WP 0306 00)

Materials/Parts

Nut, self-locking (P/N M45913/1-5CBB) (2)

REMOVAL

NOTE

Although mounted in different location for M917s, mounting bracket is replaced the same way. M915 is illustrated.

1. Open door of personal gear storage box (3).
2. Remove four self-locking nuts (1), eight washers (2), four cap screws (5), and M13 decontamination kit mounting bracket (4) from side of personal gear storage box (3). Discard self-locking nuts.

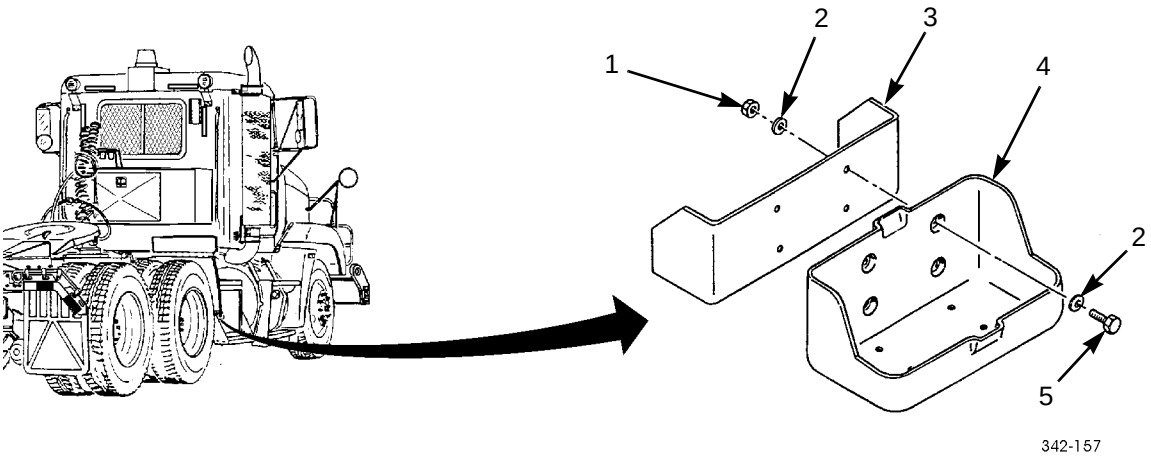

INSTALLATION

1. Install M13 decontamination kit mounting bracket (4) on side of personal gear storage box (3) with four cap screws (5), eight washers (2), and four new self-locking nuts (1).
2. Tighten four self-locking nuts (1) to 22 lb-ft (30 Nm).
3. Close door of personal gear storage box (3).

END OF WORK PACKAGE

ARCTIC HEATER REPLACEMENT (WEBASTO) 0298 00

THIS WORK PACKAGE COVERS

Arctic Heater Removal, Arctic Heater Fuel Pump Removal, Arctic Heater Installation, Arctic Heater Fuel Pump Installation

INITIAL SETUP

Tools and Special Tools

Tool kit, general mechanic's (Item 50, WP 0306 00)

Pan, drain (Item 29, WP 0306 00)

Materials/Parts

Tags, marker (Item 34, WP 0305 00)

Personnel Required

Two

Equipment Condition

Cooling system drained (WP 0046 00)

ARCTIC HEATER REMOVAL

WARNING

DO NOT perform fuel system checks, inspections or maintenance while smoking or near fire, flames or sparks. Fuel may ignite, causing injury or death to personnel or damage to equipment.

1. At top of transmission, tag and disconnect two connectors (1 and 3) of arctic heater harness (4) from connectors of wiring harness (2).

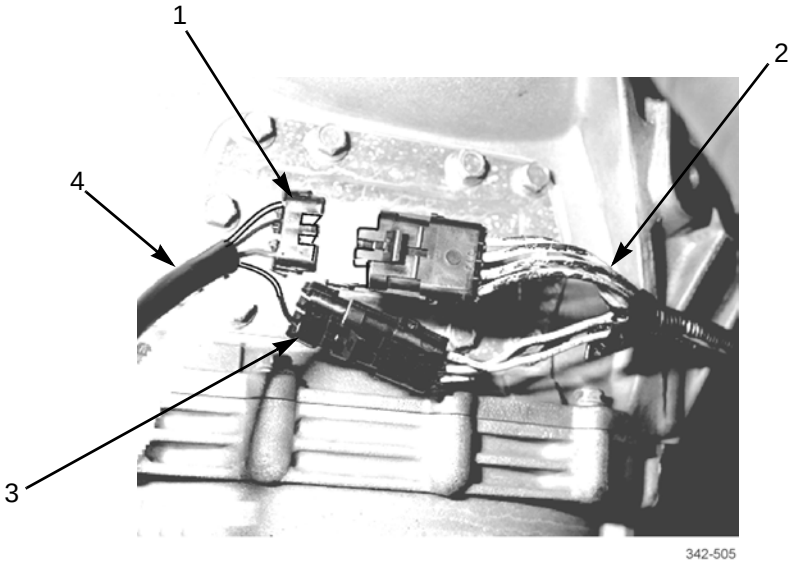

ARCTIC HEATER REMOVAL - CONTINUED

2. At left-rear of cab, loosen clamp and disconnect exhaust tube (9) from exhaust port (8) of arctic heater (7).
3. While supporting arctic heater (7), remove four nuts and screws holding arctic heater mounting bracket to cab floor.
4. Disconnect connector (6) of arctic heater (7) from connector of wiring harness (5).

NOTE

Have suitable container available to catch coolant draining from hoses.

5. Loosen clamp and disconnect coolant hose (10) from coolant pump (11) of arctic heater (7).
6. Loosen clamp and disconnect coolant hose (14) from coolant outlet port (13).
7. Loosen clamp and disconnect fuel supply hose from fuel inlet (12).
8. Remove arctic heater (7) assembly from vehicle.

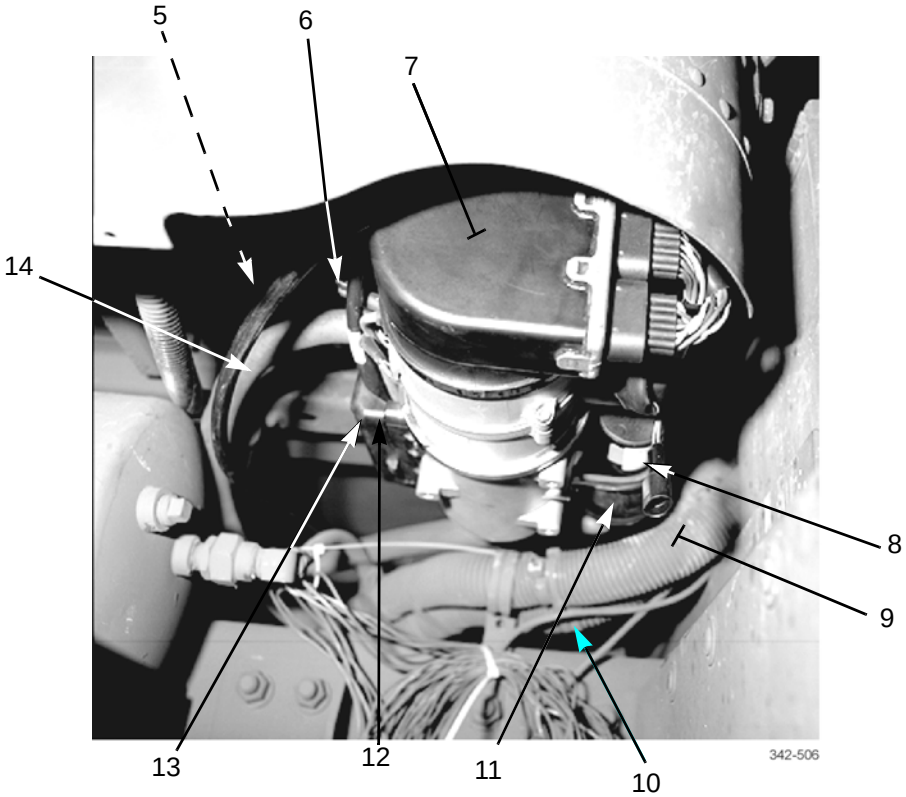

ARCTIC HEATER REMOVAL - CONTINUED

9. Remove six nuts (15), screws (18) and mounting bracket (20) from adapter bracket (19).
10. Remove three screws (16), washers (17), and adapter bracket (19) from arctic heater (7).

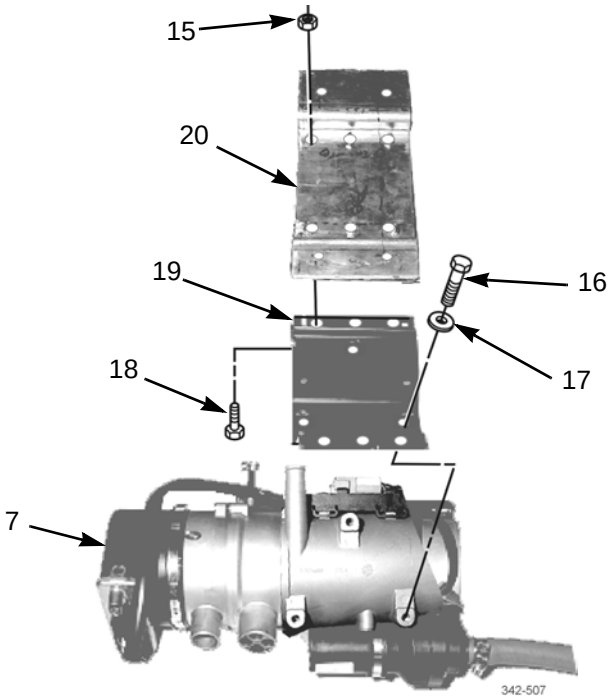

ARCTIC HEATER FUEL PUMP REMOVAL

WARNING

DO NOT perform fuel system checks, inspections or maintenance while smoking or near fire, flames or sparks. Fuel may ignite, causing injury or death to personnel or damage to equipment.

1. Remove nut (21), washer (22), screw (23), and clamp (24) from arctic heater fuel pump (29).
2. Disconnect connector (28) of arctic heater fuel pump (29) from wiring harness (27).

NOTE

- Have a suitable container available to catch fuel draining from hoses.
- Note position of pump for installation.
- Perform step 3 at each end of arctic heater fuel pump.

3. Loosen clamp (25) and disconnect fuel hose (26) from arctic heater fuel pump (29).
4. Remove arctic heater fuel pump (29) from vehicle.

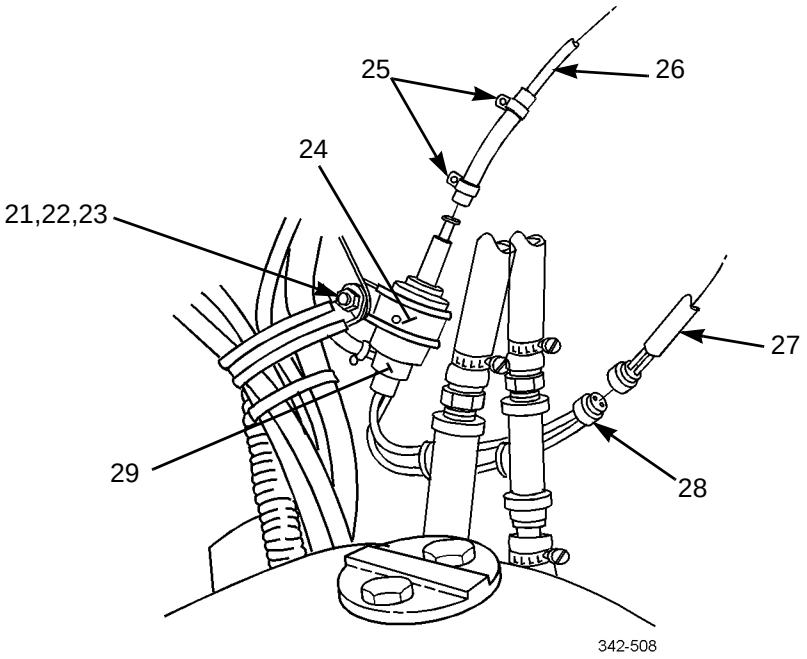

ARCTIC HEATER INSTALLATION

WARNING

DO NOT perform fuel system checks, inspections or maintenance while smoking or near fire, flames or sparks. Fuel may ignite, causing injury or death to personnel or damage to equipment.

1. Install adapter bracket (19) to arctic heater (7) with three washers (17) and screws (16).
2. Install mounting bracket (20) to adapter bracket (19) with six screws (18) and nuts (15).

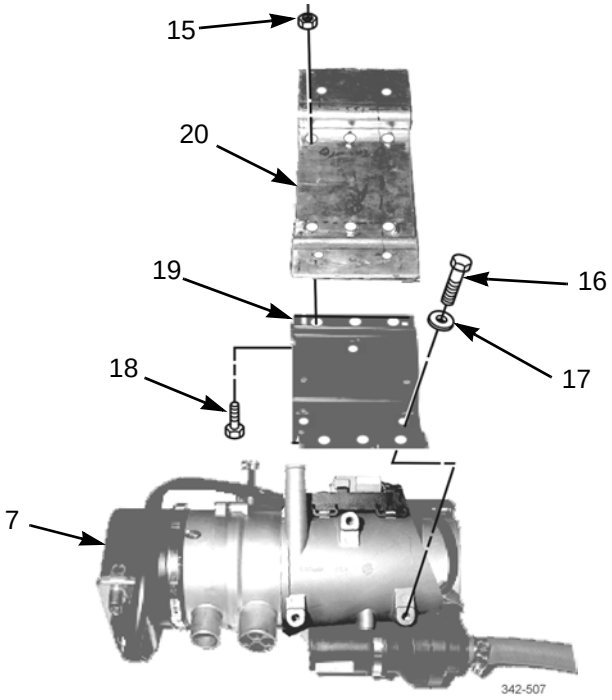

ARCTIC HEATER INSTALLATION - CONTINUED

1. Position arctic heater (7) assembly to vehicle.
2. While supporting arctic heater (7), connect fuel supply hose to fuel inlet (12) and tighten clamp.
3. Connect coolant hose (14) to coolant outlet port (13) and tighten clamp.
4. Connect coolant hose (10) to coolant pump (11) of arctic heater (7) and tighten clamp.
5. Connect connector (6) of arctic heater (7) to connector of wiring harness (5).
6. Install mounting bracket of arctic heater to cab floor with four screws and nuts.
7. Install exhaust tube (9) to exhaust port (8) of arctic heater (7) and tighten clamp.

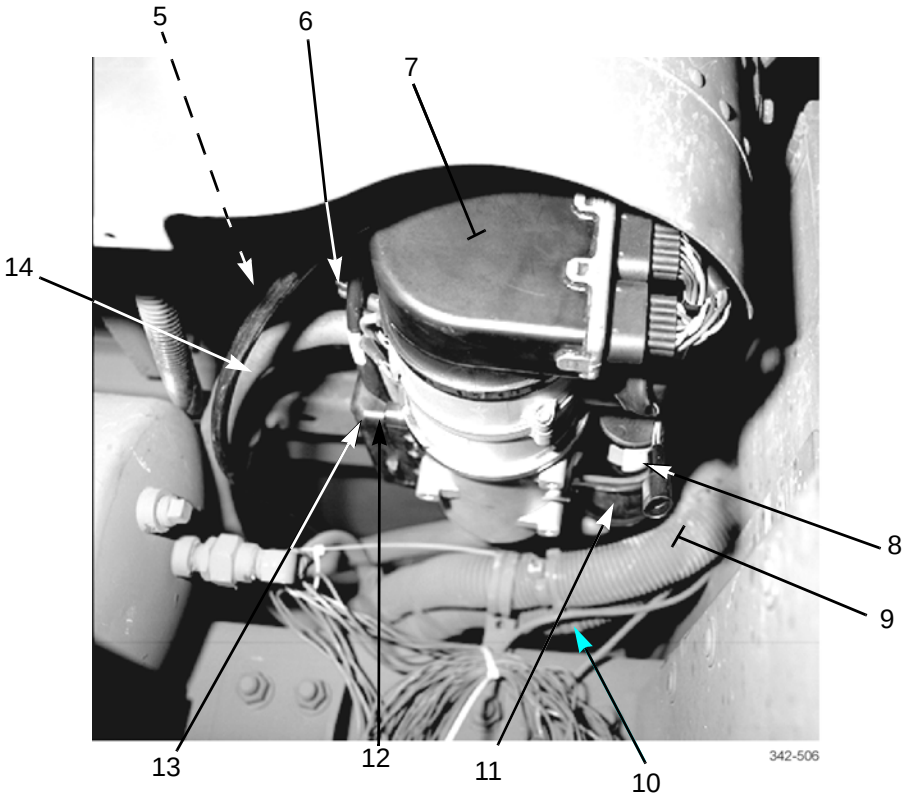

ARCTIC HEATER INSTALLATION - CONTINUED

8. At top of transmission, connect two connectors (1 and 3) of arctic heater harness (4) to connectors of wiring harness (2).

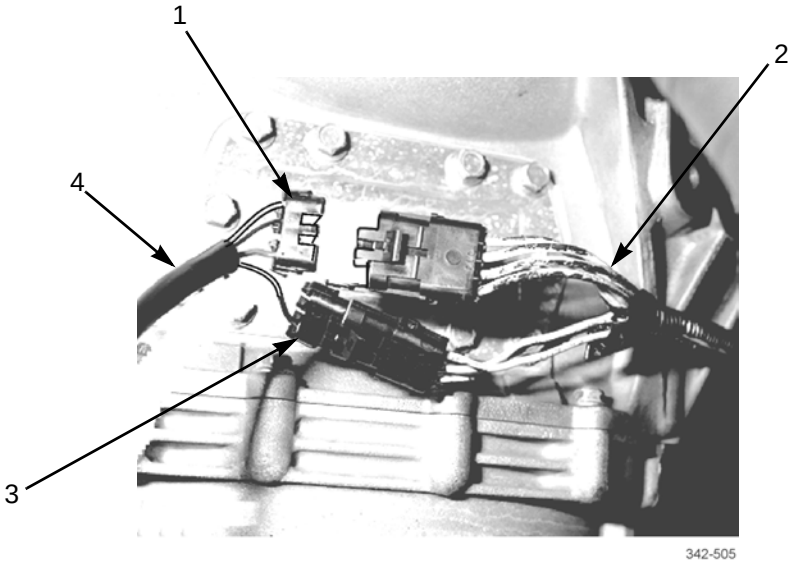

ARCTIC HEATER FUEL PUMP INSTALLATION

WARNING

DO NOT perform fuel system checks, inspections or maintenance while smoking or near fire, flames or sparks. Fuel may ignite, causing injury or death to personnel or damage to equipment.

1. Position arctic heater fuel pump (29) to vehicle.

NOTE

Perform step 2 at each end of arctic heater fuel pump.

2. Connect fuel hose (26) to arctic heater fuel pump (29). Tighten clamp (25).
3. Connect connector (28) of arctic heater fuel pump (29) to wiring harness (27).
4. Install arctic heater fuel pump (29) with clamp (24), screw (23), washer (22), and nut (21).

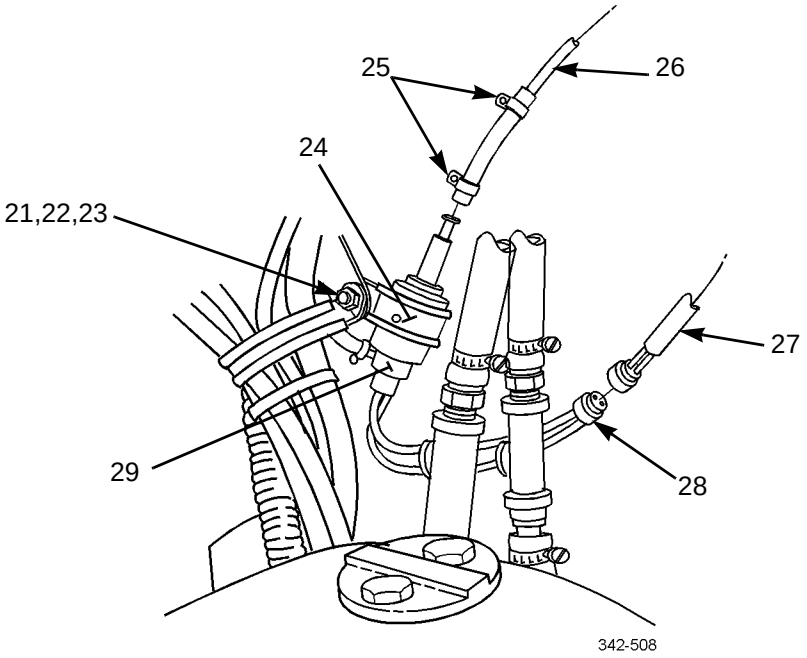

5. Fill cooling system (WP 0046 00).

END OF WORK PACKAGE

GENERAL MAINTENANCE INSTRUCTIONS 0299 00

THIS WORK PACKAGE COVERS

General, Work Safety, Cleaning Instructions, Preservation of Parts, Painting, Inspection Instructions, Disassembly and Assembly Instructions, Repair Instructions, Lubrication Instructions, Application of Adhesives and Sealing Compounds, Standard Tool Requirements, Push-in Air Tube Fittings, Tagging Wires and Hoses, Soldering, Heat Shrinkable Tubing, Electrical Ground Ports, Lines and Ports, Tubes and Compression Fittings, Lockwire, Fluid Disposal, Multimeter, Electrical Repair

INITIAL SETUP

Tools and Special Tools

Compressor unit (Item 5, WP 0306 00)
Cutter, tube (Item 6, WP 0306 00)
Heat gun (Item 17, WP 0306 00)
Multimeter, digital (Item 28, WP 0306 00)
Soldering gun (Item 41, WP 0306 00)

Materials/Parts

Compound, sealing (Item 13, WP 0305 00)
Detergent (Item 14, WP 0305 00)
Flux, soldering (Item 15, WP 0305 00)
Oil, lubricating (Item 22, WP 0305 00)
Rags, wiping (Item 31, WP 0305 00)
Solder, rosin core (Item 32, WP 0305 00)

Materials/Parts - Continued

Tags, marker (Item 34, WP 0305 00)
Tape, duct (Item 36, WP 0305 00)
Wire, nonelectrical (Item 38, WP 0305 00)

References

FM 5-20
TB 43-0209
TM 9-214
TM 9-237
TM 43-0139
WP 0151 00
TM 9-2320-302-10

GENERAL

1. These general maintenance instructions contain general shop practices and specific methods you must be familiar with to properly maintain the M915 Family of Vehicles. You should read and understand these practices and methods before performing any Unit Maintenance procedures.
2. Before beginning a task, find out how much repair, modification or replacement is needed to fix the equipment. Sometimes the reason for equipment failure can be seen right away and complete teardown is not necessary. Disassemble equipment only as far as necessary to repair or replace damaged parts.
3. In some cases, a part may be damaged during removal. If the part appears to be good, and other parts behind it are not defective, leave it in place and continue with the procedure. Here are a few simple rules:
   a. Do not remove dowel pins or studs unless loose, bent, broken or otherwise damaged.
   b. Do not remove bearings or bushings unless damaged. If you need to remove them to access parts behind, carefully pull out bearings and bushings.
   c. Replace all gaskets, lockwashers, locknuts, seals, cotter pins, and preformed packings.
4. All tags and forms attached to the equipment must be checked to learn the reason for removal of equipment from service. Modification Work Orders (MWOs) and Technical Bulletins (TBs) must also be checked for equipment changes and updates.

WORK SAFETY

1. Before beginning a procedure, think about the safety risks and hazards to yourself and to others. Wear protective gear such as safety goggles or lenses, safety shoes, rubber apron or gloves.
2. Before beginning a procedure, ensure that the following conditions have been observed, unless otherwise specified:
   a. Vehicle must be parked on level ground with parking brake applied and wheels blocked.
   b. Transmission must be in N (Neutral).
   c. Engine must be off.
   d. Master battery switch must be in OFF position.
   e. Components must be at operating temperature to be tested.
3. Immediately clean up spilled fluids to avoid slipping.
4. When lifting heavy parts, have someone help you. Ensure that lifting equipment or jack is working properly, that it meets weight requirement of part being lifted, and that it is securely fastened to part.
5. Always use power tools carefully.
6. Observe all WARNINGs and CAUTIONS.

CLEANING INSTRUCTIONS

WARNING

Improper cleaning methods and use of unauthorized cleaning liquids or solvents can injure personnel and damage equipment.

1. **General.** Cleaning instructions will be the same for the majority of parts and components which make up the truck. The following applies to all cleaning operations:
   a. Clean all parts before inspection, after repair, and before assembly.
   b. Keep hands free of grease which can collect dust, dirt, and grit.
   c. After cleaning, all parts should be covered or wrapped to protect them from dust and dirt. Parts that are subject to rust should be lightly oiled after cleaning.

CLEANING INSTRUCTIONS - CONTINUED

2. Castings, Forgings, and Machined Metal Parts.

a. Clean inner and outer surfaces with detergent and dry with clean rags.

b. Remove grease and accumulated deposits with a scrub brush.

WARNING

Compressed air used for cleaning or drying purposes, or for clearing restrictions, should never exceed 30 psi (207 kPa). Wear protective clothing (goggles/shield, gloves, etc.) and use caution to avoid injury to personnel.

c. Clear all threaded holes with compressed air to remove dirt and cleaning fluids.

CAUTION

DO NOT wash oil seals, electrical cables, and flexible hoses with dry cleaning solvent or mineral spirits. Serious damage or destruction of material will result.

3. **Oil Seals, Electrical Cables, and Flexible Hoses.** Wash oil seals, electrical cables, and flexible hoses with a solution of detergent (Item 14, WP 0305 00) and water, and wipe dry with a clean rag.

4. **Bearings.** Clean bearings in accordance with TM 9-214.

PRESERVATION OF PARTS

Unpainted metal parts that will not be installed immediately after cleaning may be covered with a thin coat of lubricating oil.

PAINTING

1. On painted areas where paint has been removed, paint in accordance with procedures outlined in TM 43-0139 and TB 43-0209.

2. For camouflage painting instructions, refer to FM 5-20.

INSPECTION INSTRUCTIONS

NOTE

All damaged areas should be marked for repair or replacement.

1. All components and parts must be carefully checked to determine if they are serviceable for use, can be repaired or must be scrapped.

2. Inspect drilled and tapped (threaded) holes for the following:

   a. Wear, distortion, cracks, and any other damage in or around holes.

   b. Threaded areas for wear distortion (stretching) and evidence of cross-threading.

3. Inspect metal lines, flexible lines or hoses, and metal fittings and connectors for the following:

   a. Metal lines for sharp kinks, cracks, bad bends, and dents.

   b. Flexible lines or hoses for fraying, evidence of leakage, and loose metal fittings or connectors.

   c. Metal fittings and connectors for thread damage and worn or rounded hex heads.

INSPECTION INSTRUCTIONS - CONTINUED

4. Inspect castings, forgings, and machined metal parts for the following:
   a. Machined surfaces for nicks, burrs, raised metal wear, and other damage.
   b. Inner and outer surfaces for breaks and cracks.
5. Inspect bearings in accordance with TM 9-214.

DISASSEMBLY AND ASSEMBLY INSTRUCTIONS

1. Keep major components together whenever possible and practical.
2. Tag hoses, electrical wires, cables, and harnesses to identify them and aid during installation.
3. Keep related parts together for identification purposes.
4. Temporarily install attaching hardware such as screws, bolts, washers, and nuts to prevent loss.
5. Only disassemble to the point of the problem.
6. Ensure that parts are clean and lubricated before assembly.

REPAIR INSTRUCTIONS

CAUTION

Before welding, the following components must be disconnected: DDEC ECU, Transmission ECU, ABS ECU, CWS ECU (M915A3, M916A3), CTIS ECU (M916A3, M917A2), and batteries. If welding on a trailer, it must be uncoupled from tractor truck. Failure to follow this caution may damage electronic components.

1. Repair castings, forgings, and machined parts using the following instructions:
   a. Repair minor cracked castings or forgings in accordance with TM 9-237.
   b. Repair minor damage to machined surfaces with an abrasive cloth dipped in detergent.
   c. Replace any deeply nicked machined surface that could affect the assembly operation.
   d. Repair minor damage to threaded cap screw holes with thread tap of same size to prevent cutting oversize.
2. After repair, thoroughly clean all parts to prevent dirt, metal chips or other foreign material from entering any working parts.

LUBRICATION INSTRUCTIONS

NOTE

Refer to TM 9-2320-302-10 and to Unit PMCS (WP 0023 00) for detailed, illustrated instructions on proper lubrication. Some general practices to remember:

a. Use the correct lubricant.
b. Keep lubricants clean.
c. Clean all fittings prior to lubrication.
d. Lubricate clean disassembled and new parts to prevent rust.

APPLICATION OF ADHESIVES AND SEALING COMPOUNDS


WARNING

Adhesives and sealing compounds can burn easily, can give off harmful vapors, and are harmful to skin and clothing. To avoid injury or death, keep away from open fire and use in a well-ventilated area. If adhesive or sealing compound contacts skin or clothing, wash immediately with soap and water.

1. **General.** Adhesives are recommended in some tasks to ensure and strengthen seals. Sealing compounds are used to seal parts against moisture. The following information describes their correct use and application.
2. **Adhesive.** Adhesive provides a seal against leakage and a resistance to loosening when used in the assembly of threaded, slip-fitted or press-fitting parts. Always use grade of adhesive specified and never use when other retaining means are provided, such as lockwires, lockwashers, lockplates, and fasteners.
3. **Sealing Compound.**
   a. Anytime a seal is broken, the part must be thoroughly cleaned to remove any remaining sealing compound and dirt.
   b. Thoroughly clean surface before applying sealing compound.
   c. When applying sealing compound, ensure that the area is completely covered. Press sealing compound into and around parts as necessary.
   d. Sealing compound will set in 15-30 minutes depending on temperature and humidity.

STANDARD TOOL REQUIREMENTS

1. The following are general practices regarding the use of tools:
   a. Always use the proper tool kit and tools for the procedure being performed.
   b. Ensure that tools are clean and lubricated to reduce wear and to prevent rust.
   c. Keep track of tools. Do not be careless with them.
   d. Return tools to toolbox when finished with repair or maintenance.
   e. Return toolboxes and tools to tool storage when not in use.
   f. Inventory tools before and after each use.
2. Some maintenance tasks may require special or fabricated tools. The “Initial Setup” of the procedure will specify any special or fabricated tools needed to perform that procedure. Use these special tools only for the maintenance procedures for which they are designed or called out. If you are unfamiliar with a required tool, see your supervisor.

PUSH-IN AIR TUBE FITTINGS

NOTE

Some air tubes use conventional compression fittings with tube nuts. Other air tubes use plastic push-in fittings. The following procedure applies to push-in fitting replacement.

1. **Removal.**
   a. Press release button, hold release button against fitting body, then pull air tube out from push-in fitting.
   b. To remove push-in fitting, loosen jamnut and remove fitting from component.
   c. Repeat steps 1 and 2 at other end of air tube.

PUSH-IN AIR TUBE FITTINGS - CONTINUED

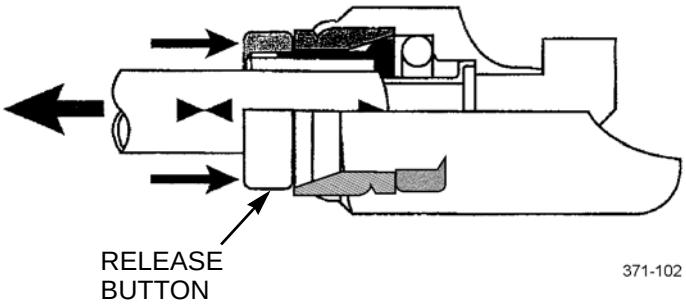

DEPRESS BUTTON TO DISCONNECT AIR TUBE

2. **Installation.**

NOTE

Ensure push-in fittings are clean and dry before they are installed.

a. Apply a thin coat of pipe sealing compound to any male threads of push-in fitting. Install push-in fitting to component. Tighten jamnut.

CAUTION

DO NOT cut new air tube shorter than damaged air tube. It is permissible to cut new air tube slightly longer than damaged air tube.

NOTE

- Cut new air tube squarely. A maximum 15-degree angle is permissible. If using premarked tubing, cut should be in center of “bowtie” symbol.
- Perform step b if fabricating a new tube.

b. Compare length of damaged air tube to bulk air tube and cut new air tube to same length. Cut tubing squarely. For best results, use tube cutter.

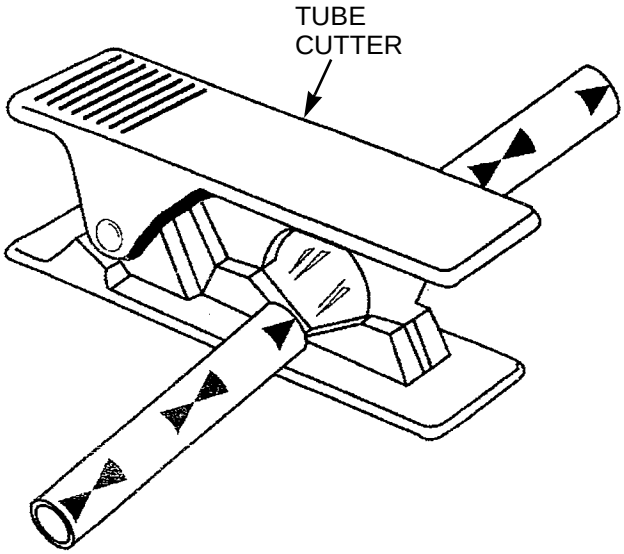

PUSH-IN AIR TUBE FITTINGS - CONTINUED

c. Position new air tube to vehicle. Check that port or mating part is clean and free of debris.

NOTE

Perform steps d and e at each end of air tube.

d. Insert air tube into push-in fitting until it bottoms. Push twice to ensure that air tube is inserted past collet and o-ring.

e. Confirm that air tube is fully installed to push-in fitting by pulling on air tube. Air tube should not pull out of push-in fitting.

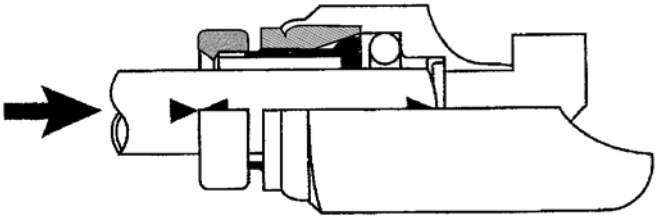

371-104

INSERT AIR TUBE UNTIL IT BOTTOMS

TAGGING WIRES AND HOSES

1. Use marker tags to identify all electrical wires, fuel, oil, air, and coolant lines, and any other parts which may be hard to identify or replace later. Fasten tags to parts during removal by wrapping wire fasteners around or through parts and twisting ends together. Position tags to be out of the way during cleaning, inspection, and repair. Mark tags with a pencil, pen or marker.

2. Whenever possible, identify electrical wires with the number of the terminal or wire to which it connects. If no markings can be found, tag both wires or wire and terminal, and use the same identifying mark for both. If you cannot tag a wire because it must fit through a small hole or you cannot reach it, write down the description of the wire and the point to which it connects or draw a simple diagram on paper. Be sure to write down enough information so you will be able to properly connect the wires during assembly. If you need to identify a loose wire, look for identifying number near end of the wire, stamped on a permanent metal tag. Compare the number to wire numbers on the appropriate electrical schematic.

3. Identify fuel, oil, and coolant lines when you are taking off more than one line at the same time. Mark tags with points to which lines and hoses must be connected. If it is not obvious which end of a line goes where, tag each end of the line.

4. Identify and tag other parts as required by name and installed location.

SOLDERING

CAUTION

Use low wattage soldering gun when soldering electrical wires, connectors, terminal lugs, and receptacles. High wattage soldering guns may damage parts by overheating.

SOLDERING - CONTINUED

1. Solder connection must be bright and clean before soldering. Remove dirt and grease with detergent. Solder used must be of lead-tin alloy, rosin core with soldering flux. All wires, parts, and soldering gun must be tinned for good connection and maximum transfer of heat.
2. To prevent overheating damage to electrical parts when soldering and unsoldering connections, hold bare wire, lead or terminal lug close to soldering point with long roundnose pliers. Pliers act as heat sink and absorb excess heat.
3. Clean all solder joints with a scrub brush and electrical parts with detergent after soldering to get a bright, clean surface.

HEAT SHRINKABLE TUBING

NOTE

Further information on shrink wrap usage and sources of supply can be found in WP 0151 00.

Use heat shrinkable tubing to insulate soldered and crimped electrical connections as follows:

a. Cut desired length of new heat shrinkable tubing twice the diameter of the connection to be covered.

b. Slide the heat shrinkable tubing onto the wire and out of the way before making electrical connection.

c. After making electrical connection, slide heat shrinkable tubing into place over electrical connection.

WARNING

DO NOT touch heat shrinkable tubing for at least 30 seconds after heating. Heat shrinkable tubing is hot and will burn you.

d. Hold heat gun 4-5 in (10.2-12.7 cm) away from heat shrinkable tubing and apply heat for approximately 30 seconds. Stop applying heat as soon as heat shrinkable tubing forms to the shape of the electrical connection.

ELECTRICAL GROUND POINTS

Many electrical problems are the result of poor ground connections. You can ensure that ground connections are good by performing the following steps:

WARNING

Although master battery switch must be on and battery ground cable connected in order to test electrical circuit voltage, turn off master battery switch or disconnect battery ground cable before performing resistance tests or replacing parts. This will prevent shock to personnel, and damage to parts and equipment.

a. Remove hardware connecting ground cable terminal lug to ground point.

b. Clean mounting hardware, ground cable terminal lugs, and ground point with detergent and scrub brush.

c. Remove any rust with wire brush and crocus cloth.

d. Look for cracks, loose terminal lugs, and stripped threads. Replace any defective parts.

e. Install hardware connecting ground cable terminal lug to ground point. Ensure that all hardware is tight.

LINES AND PORTS

To keep dirt from contaminating fluid systems when removing and installing fuel, oil, and coolant lines, perform the following steps:

a. Clean fittings and surrounding area before disconnecting lines.

b. Cover, cap, plug or tape lines and ports after disconnecting lines. When these are not available, use hand-carved wooden plugs, clean rags, duct tape or other similar materials to prevent dirt from entering system.

c. Ensure that new and used parts are clean before installing.

d. Wait to remove cover, cap, plug or tape from lines and ports until just before installing lines.

TUBES AND COMPRESSION FITTINGS

1. Tubes with inverted nuts and compression fittings are designed for one time assembly. Once assembled, they must be replaced as a unit if any parts are found defective. Used parts may not seal properly when used with new ones.
2. Used tube assemblies in good condition can be installed to their original location without leaking.
3. Assemble new tubes, compression sleeves, and inverted nuts as follows:

   a. Slide inverted nut onto end of tube.

   b. Slide compression sleeve onto end of tube.

   c. Repeat previous two steps for other end of tube as required.

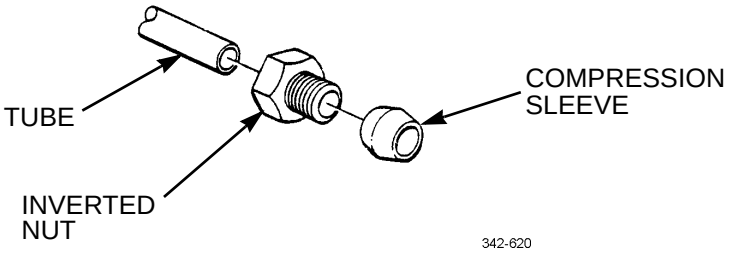

4. Install new tube assemblies as follows:

   a. Insert end of tube as far as it will go into compression fitting to which tube is being installed.

   b. Twist inverted nut into compression fitting and tighten inverted nut against compression sleeve with open-end wrench. Compression sleeve will clamp down around tube and conform to internal surface of compression fitting and inverted nut.

   c. Repeat previous two steps for other end of tube as required.

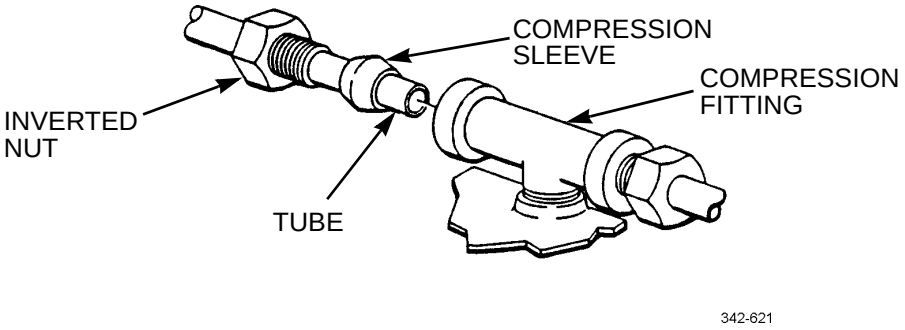

LOCKWIRE

1. Always use nonelectrical wire.
2. Drilled head screws and bolts usually do not require lockwiring if they are installed with self-locking nuts or lockwashers.
3. Three screws or bolts are the maximum number that may be lockwired in a series when they are spaced 4-6 in (10.2-15.2 cm) apart. The maximum number of closely spaced multiple groups of screws or bolts to be lockwired is limited to the number of units that can be lockwired with a 24 in (61 cm) length of wire.
4. Do not secure screws, bolts or fittings which are spaced more than 6 in (15.2 cm) apart. Lockwire these fasteners to tie points 6 in (15.2 cm) or less away.
5. Lockwire parts so that tension will be on lockwire when parts tend to loosen. Lockwire should be installed and twisted tight so that loop around head stays down and does not come up over head of screw or bolt. This does not apply to castellated nuts when slot is close to top of nuts; wire is more secure when made to pass along the side of stud. Ensure that lockwire is tight but not overstressed.
6. Make pigtail of 1/4-1/2 in (6.4-12.7 mm) at end of lockwire. Bend pigtail down so it will not become a snag.
7. When lockwiring castellated nuts, tighten castellated nut to low side of torque range, then continue tightening until slot lines up with hole.
8. In blind, tapped hole application of bolts, castellated nuts or studs, lockwire as illustrated.

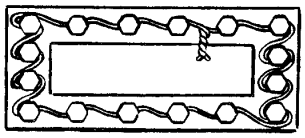

SMALL SCREWS IN CLOSELY SPACED, CLOSED GEOMETRICAL PATTERN: SINGLE WIRE METHOD

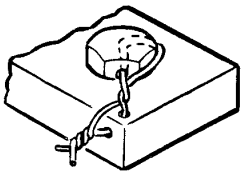

SINGLE FASTENER APPLICATION: DOUBLE TWIST METHOD

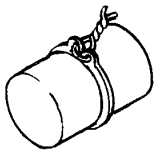

EXTERNAL RETAINER RING: SINGLE WIRE METHOD

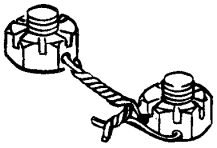

CASTELLATED NUTS ON UNDRILLED STUDS: DOUBLE TWIST METHOD

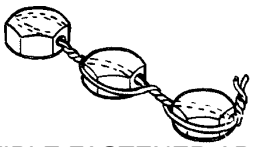

MULTIPLE FASTENER APPLICATION: DOUBLE TWIST METHOD

342-622

FLUID DISPOSAL

Dispose of contaminated drained fluids in accordance with the Standard Operating Procedures (SOP) of your unit.

MULTIMETER

1. **General.** The digital multimeter is used to troubleshoot the electrical system of the vehicle. The multimeter's ohms scale is used to test for continuity, shorts, and resistance and the voltmeter scale is used to test voltage levels at any point in the electrical system.

MULTIMETER - CONTINUED

2. **Continuity Tests.** Continuity tests are performed to check for breaks in a circuit (such as a fuse, switch, light bulb or electrical cable).

NOTE

If digital readout will not zero properly, replace batteries and repeat zeroing procedure. If digital readout will not zero after batteries have been replaced, notify your supervisor.

a. **Zero the Multimeter.**

(1) Set multimeter ON/OFF switch (1) to ON position.

(2) Press OHMS FUNCTION switch (2).

(3) Press LOWEST VOLTAGE/OHMS selector switch (3).

(4) Touch black and red probes (4 and 5) together and check for a zero reading on digital readout (6).

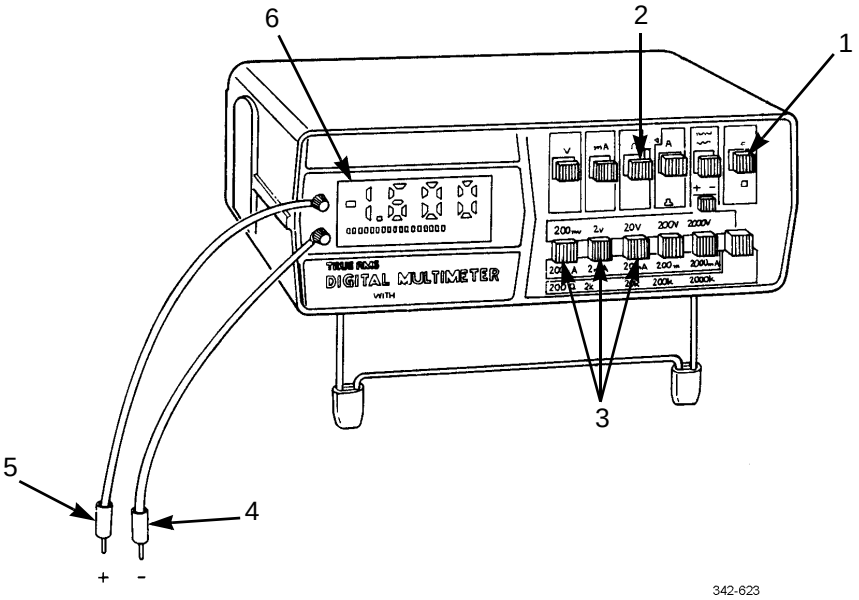

CAUTION

Before performing a continuity test, always turn master battery switch to OFF position and disconnect circuit to be tested. Failure to follow this caution may damage multimeter.

b. **Testing for Continuity.**

(1) Zero multimeter.

(2) Connect black and red probes (4 and 5) to both terminals of circuit being tested.

(3) Read digital readout (6) and interpret results as follows:

(a) If digital readout (6) indicates 0 (zero), circuit has continuity.

(b) If digital readout (6) indicates resistance, circuit is open.

MULTIMETER - CONTINUED

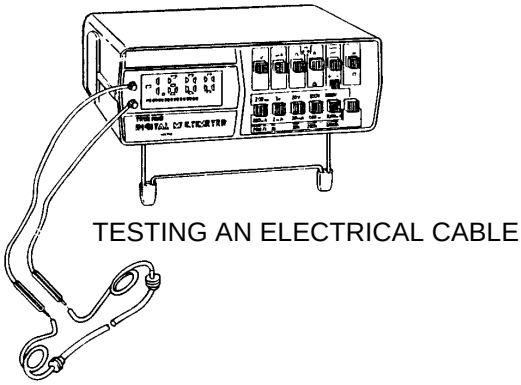

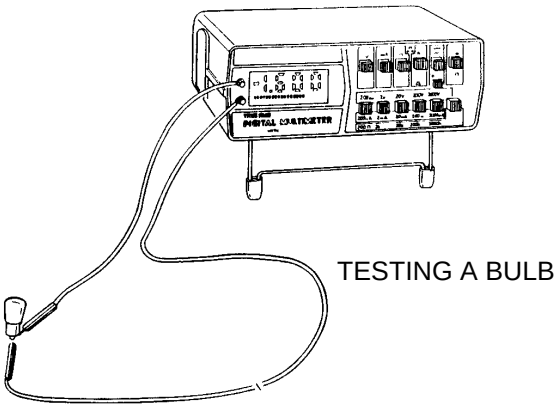

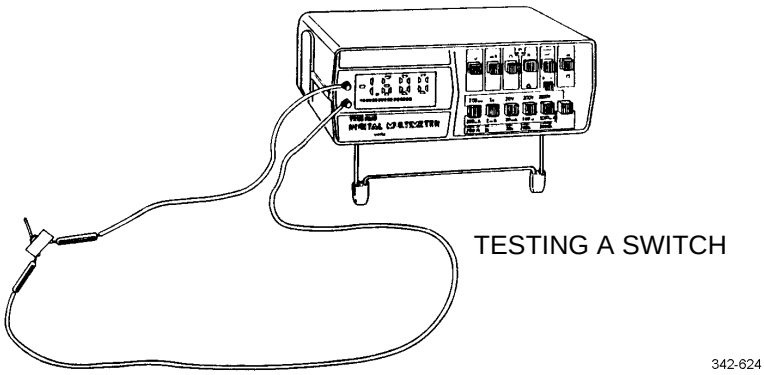

CAUTION

Before performing a continuity test, always turn master battery switch to OFF position and disconnect circuit to be tested. Failure to follow this caution may damage multimeter.

c. **Testing for Shorts.** A short (or short circuit) occurs when two circuits that should not be connected have metal-to-metal contact with each other. A short also occurs when a circuit that should not touch ground has metal-to-metal contact with ground.

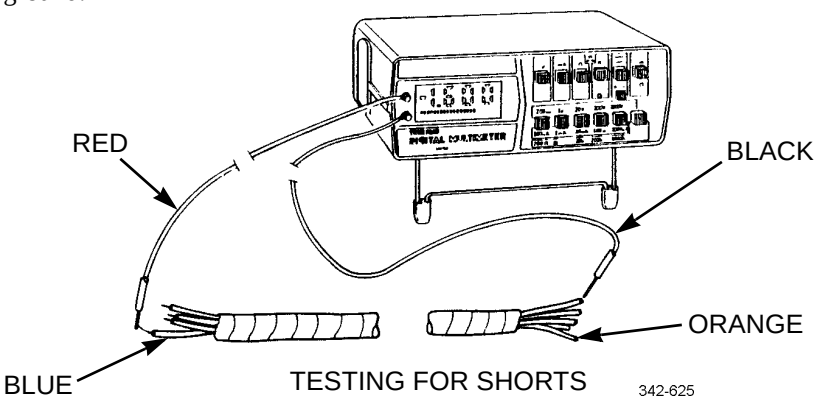

MULTIMETER - CONTINUED

(1) Zero multimeter.

(2) Connect black probe (4) to one circuit and red probe (5) to either a ground or another circuit.

(3) Read digital readout (6) and interpret results as follows:

(a) If digital readout (6) indicates 0 (zero), circuits are shorted or circuit is grounded if testing to ground.

(b) If digital readout (6) does not indicate 0 (zero), circuits are not shorted.

(c) If digital readout (6) jumps or flickers, circuits are shorted or grounded intermittently.

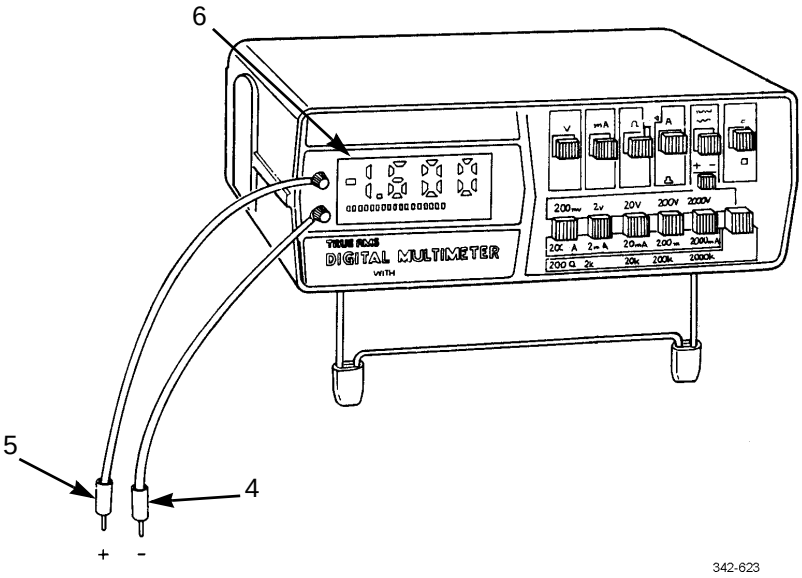

CAUTION

Before performing a continuity test, always turn master battery switch to OFF position and disconnect circuit to be tested. Failure to follow this caution may damage multimeter.

d. **Testing for Resistance.** Allowable resistance readings depend on circuit being tested. Refer to the particular section dealing with that circuit or component for allowable readings.

(1) Zero multimeter.

(2) Press OHMS FUNCTION switch (2).

(3) Press LOWEST VOLTAGE/OHMS selector switch (3). If test calls for ohms range other than RX1, set RANGE SELECTOR switch (7) to required range.

(4) Connect black and red probes (4 and 5) across circuit to be tested.

(5) Read digital readout (6) and interpret results as circuit resistance.

3. **Measuring DC Voltage.**

a. Set multimeter ON/OFF switch (1) to ON position.

b. Press VOLTS FUNCTION switch (8).

c. Set AC/DC selector switch (9) to DC.

MULTIMETER - CONTINUED

d. Select and press LOWEST VOLTAGE/OHMS selector switch (3) for voltage range higher than volts to be measured.

e. Connect red probe (5) to positive (+) side of circuit and black probe (4) to negative (-) side of circuit.

f. Read digital readout (6) and interpret results as DC voltage in circuit being tested.

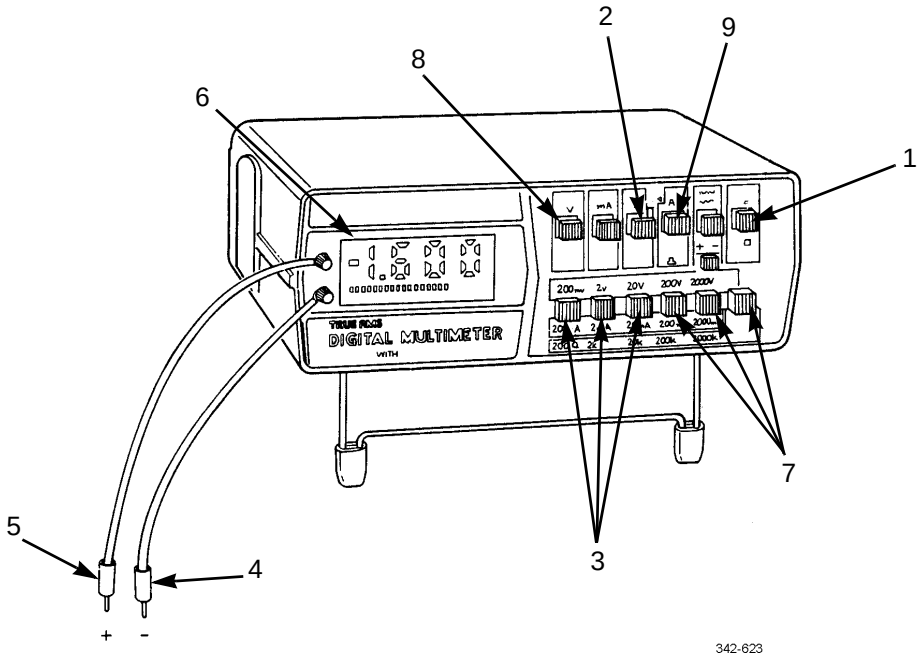

ELECTRICAL REPAIR

For complete instructions on the repair of standard military and commercial connectors and general information on splicing, refer to WP 0151 00.

END OF WORK PACKAGE

ILLUSTRATED LIST OF MANUFACTURED ITEMS 0300 00

SCOPE

1. This work package includes complete instructions for making items authorized to be manufactured or fabricated at Unit Maintenance.
2. A Part Number Index in alphanumeric order is provided in Table 1 for cross-referencing the part number of the item to be manufactured to Table 2, which covers fabrication criteria.
3. All bulk materials needed for manufacture of an item are listed by part number or specification number.

PART NUMBER INDEX

Table 1. Part Number Index.

PART NUMBER	NAME	TABLE NUMBER
FITC-02	Cable, Special Purpose	2
NT10010-BKX13	Tube, Nylon	2
NT10010-BKX16	Tube, Nylon	2
NT10010-BKX40	Tube, Nylon	2
NT10010-BKX175	Tube, Nylon	2
PFT-4A	Tubing, Nonmetellic	2
PFT-4A-BLK-100X13	Tube, Nylon	2
PFT-4A-BLK-100X46	Tube, Nylon	2
PFT-4A-BLK-100X48	Tube, Nylon	2
PFT-4A-BLK-100X54	Tube, Nylon	2
PFT-4A-BLK-100X70	Tube, Nylon	2
PFT-4A-BLK-100X78	Tube, Nylon	2
PFT-4A-BLK-100X85	Tube, Nylon	2
PFT-4A-BLK-100X93	Tube, Nylon	2
PFT-4A-BLK-100X159	Tube, Nylon	2
PFT-4A-BLK-100X225	Tube, Nylon	2
PFT-6B-BLK-100X6	Tube, Nylon	2
PFT-6B-BLK-100X15	Tube, Nylon	2
PFT-6B-BLK-100X18	Tube, Nylon	2
PFT-6B-BLK-100X25	Tube, Nylon	2
PFT-6B-BLK-100X34	Tube, Nylon	2
PFT-6B-BLK-100X36	Tube, Nylon	2
PFT-6B-BLK-100X40	Tube, Nylon	2
PFT-6B-BLK-100X42	Tube, Nylon	2
PFT-6B-BLK-100X52	Tube, Nylon	2
PFT-6B-BLK-100X53	Tube, Nylon	2
PFT-6B-BLK-100X70	Tube, Nylon	2

Table 1. Part Number Index - Continued.

PART NUMBER	NAME	TABLE NUMBER
PFT-6B-BLK-100X75	Tube, Nylon	2
PFT-6B-BLK-100X79	Tube, Nylon	2
PFT-6B-BLK-100X100	Tube, Nylon	2
PFT-6B-BLK-100X113	Tube, Nylon	2
PFT-6B-BLK-100X115	Tube, Nylon	2
PFT-6B-BLK-100X119	Tube, Nylon	2
PFT-6B-BLK-100X120	Tube, Nylon	2
PFT-6B-BLK-100X130	Tube, Nylon	2
PFT-6B-BLK-100X149	Tube, Nylon	2
PFT-6B-BLK-100X150	Tube, Nylon	2
PFT-6B-BLK-100X159	Tube, Nylon	2
PFT-8B-BLK-100X1	Tube, Nylon	2
PFT-8B-BLK-100X7	Tube, Nylon	2
PFT-8B-BLK-100X36	Tube, Nylon	2
PFT-8B-BLK-100X50	Tube, Nylon	2
PFT-8B-BLK-100X60	Tube, Nylon	2
PFT-8B-BLK-100X78	Tube, Nylon	2
PFT-8B-BLK-100X100	Tube, Nylon	2
PFT-8B-BLK-100X115	Tube, Nylon	2
PFT-8B-BLK-100X121	Tube, Nylon	2
PFT-8B-BLK-100X130	Tube, Nylon	2
PFT-8B-BLK-100X140	Tube, Nylon	2
P52-6738	Coupling, Assembly	2
04-9323-013	Pipe, Flex	2
05-09562-005	Hose, Neoprene	2
05-09562-006	Hose, Straight	2
05-09564-008	Hose, Neoprene	2
05-12538-036	Hose	2
05-12539-043	Hose, Straight	2
05-15224-004	Hose, Rubber	2
06-18131-000	Liner, Plywood	2
12-13366-040	Tube, Nylon	2
12-13367-045	Tube, Nylon	2
12-13367-060	Tube, Nylon	2
12-13367-105	Tube, Nylon	2
12-13367-142	Tube, Nylon	2
12-13367-200	Tube, Nylon	2

Table 1. Part Number Index - Continued.

PART NUMBER	NAME	TABLE NUMBER
12-13370-037	Tube, Nylon	2
12-13371-037	Tube, Nylon	2
12-13374-006	Tube, Nylon	2
12-13472-019	Tube, Nylon	2
12-13473-040	Tube, Nylon	2
18-11197-001X10	Trim, Edging	2
22-21952-004	Hose	2
22-21952-018	Hose	2
22-21952-020	Hose	2
22-21952-048	Hose	2
22-21952-052	Hose	2
22-21952-063	Hose, Heater	2
22-28607-018	Hose, Heater	2
22-28607-061	Hose, Rubber	2
22-30167-030	Hose, Heater	2
22-30168-003	Hose, Heater	2
22-30168-034	Hose, Heater	2
22-35191-010	Seal	2
22-35281-016	Hose, Rubber	2
22-35281-030	Hose, Rubber	2
22-35282-025	Hose, Rubber	2
22-35282-090	Hose, Rubber	2
22-35282-135	Hose, Rubber	2
23323FX-48	Hose, Nonmetallic	2
350359X0.3	Hose, Coolant	2
350359X1.8	Hose, Coolant	2
350359X3.5	Hose, Coolant	2
350359X3.8	Hose, Coolant	2
4246-0410X5	Tubing, Nylon	2
47336AX	Hose, Nonmetallic	2
47338AX	Hose, Nonmetallic	2
48-00050-206X6	Tape, Foam	2
48-00081-038X24	Hose	2
48-00099-150X3	Hose	2
48-00100-010X5	Tubing, Nylon	2
48-00100-010X10	Tubing, Nylon	2
48-00100-010X15	Tubing, Nylon	2

Table 1. Part Number Index - Continued.

PART NUMBER	NAME	TABLE NUMBER
48-00100-812X15	Tubing, Nylon	2
48-00100-812X18	Tubing, Nylon	2
48-00100-814X16	Tubing, Nylon	2
48-00100-815X15	Tubing, Nylon	2
48-00100-816X6	Tubing, Nylon	2
48-00100-816X18	Tubing, Nylon	2
48-00100-816X48	Tubing, Nylon	2
48-00100-829X12	Tubing, Nylon	2
48-00100-829X36	Tubing, Nylon	2
48-00100-829X56	Tubing, Nylon	2
48-00101-010X7	Tube, Nylon	2
48-00101-010X48	Hose	2
48-00101-010X72	Hose	2
48-00101-010X96	Hose	2
48-00101-010X144	Hose	2
48-00101-010X180	Hose	2
48-00101-010X264	Hose	2
48-00101-020X24	Hose, Nonmetallic	2
48-00101-020X48	Hose, Nonmetallic	2
48-00101-020X96	Hose, Nonmetallic	2
48-00101-020X120	Hose, Nonmetallic	2
48-00101-022X1	Tube, Nylon	2
48-00101-030X10	Tube, Nylon	2
48-00101-030X108	Hose, Nonmetallic	2
48-00121-016X30	Hose	2
48-00121-016X53	Hose	2
48-02014-008X48	Hose	2
48-02015-012X24	Hose, Rubber	2
48-02217-025X5	Conduit, Nonmetallic	2
48-02217-025X36	Tubing, Nonmetallic	2
48-02217-050X3	Conduit	2
48-02217-050X8	Conduit	2
48-02217-062X3	Conduit	2
48-02217-062X105	Conduit	2
48-02217-075X57.08	Conduit	2
48-02218-050X105	Conduit	2
48-02218-075X12	Conduit	2

Table 1. Part Number Index - Continued.

PART NUMBER	NAME	TABLE NUMBER
48-02454-106X27	Tape, Foam	2
48-02454-206X12	Tape, Ureth Foam	2
48-02471-001X8	Seal, Door	2
48-02471-001X55	Seal	2
5156170	Hose	2
68240R-276	Conduit	2
77620-7.5	Hose	2

Table 2. Manufactured Items.

PART NUMBER	NAME	MANUFACTURED FROM	DESCRIPTION
FITC-02	CABLE, SPECIAL PURPOSE	M83420/1-005	144 IN LONG
NT10010-BKX13	TUBE, NYLON	3250-1010	40 IN LONG
NT10010-BKX16	TUBE, NYLON	3250-1010	13 IN LONG
NT10010-BKX40	TUBE, NYLON	3250-1010	40 IN LONG
NT10010-BKX175	TUBE, NYLON	3250-1010	175 IN LONG
PFT-4A	TUBING, NONMETALLIC	PFT-4A BLACKX1300	CUT TO FIT
PFT-4A-BLK-100X13	TUBE, NYLON	PFT-4A BLACKX1300	13 IN LONG
PFT-4A-BLK-100X46	TUBE, NYLON	PFT-4A BLACKX1300	46 IN LONG
PFT-4A-BLK-100X48	TUBE, NYLON	PFT-4A BLACKX1300	48 IN LONG
PFT-4A-BLK-100X54	TUBE, NYLON	PFT-4A BLACKX1300	54 IN LONG
PFT-4A-BLK-100X70	TUBE, NYLON	PFT-4A BLACKX1300	70 IN LONG
PFT-4A-BLK-100X78	TUBE, NYLON	PFT-4A BLACKX1300	78 IN LONG
PFT-4A-BLK-100X85	TUBE, NYLON	PFT-4A BLACKX1300	85 IN LONG
PFT-4A-BLK-100X93	TUBE, NYLON	PFT-4A BLACKX1300	93 IN LONG
PFT-4A-BLK-100X159	TUBE, NYLON	PFT-4A BLACKX1300	159 IN LONG
PFT-4A-BLK-100X225	TUBE, NYLON	PFT-4A BLACKX1300	225 IN LONG
PFT-6B-BLK-100X6	TUBE, NYLON	3250-061	6 IN LONG
PVT-6B-BLK-100X15	TUBE, NYLON	3250-061	15 IN LONG
PFT-6B-BLK-100X18	TUBE, NYLON	3250-061	18 IN LONG
PFT-6B-BLK-100X25	TUBE, NYLON	3250-061	25 IN LONG
PFT-6B-BLK-100X34	TUBE, NYLON	3250-061	34 IN LONG

Table 2. Manufactured Items - Continued.

PART NUMBER	NAME	MANUFACTURED FROM	DESCRIPTION
PFT-6B-BLK-100X36	TUBE, NYLON	3250-061	36 IN LONG
PFT-6B-BLK-100X40	TUBE, NYLON	3250-061	40 IN LONG
PFT-6B-BLK-100X42	TUBE, NYLON	3250-061	42 IN LONG
PFT-6B-BLK-100X52	TUBE, NYLON	3250-061	52 IN LONG
PFT-6B-BLK-100X53	TUBE, NYLON	3250-061	53 IN LONG
PFT-6B-BLK-100X70	TUBE, NYLON	3250-061	70 IN LONG
PFT-6B-BLK-100X75	TUBE, NYLON	3250-061	75 IN LONG
PFT-6B-BLK-100X79	TUBE, NYLON	3250-061	79 IN LONG
PFT-6B-BLK-100X100	TUBE, NYLON	3250-061	100 IN LONG
PFT-6B-BLK-100X113	TUBE, NYLON	3250-061	113 IN LONG
PFT-6B-BLK-100X115	TUBE, NYLON	3250-061	115 IN LONG
PFT-6B-BLK-100X119	TUBE, NYLON	3250-061	119 IN LONG
PFT-6B-BLK-100X120	TUBE, NYLON	3250-061	120 IN LONG
PFT-6B-BLK-100X130	TUBE, NYLON	3250-061	130 IN LONG
PFT-6B-BLK-100X149	TUBE, NYLON	3250-061	149 IN LONG
PFT-6B-BLK-100X150	TUBE, NYLON	3250-061	150 IN LONG
PFT-6B-BLK-100X159	TUBE, NYLON	3250-061	159 IN LONG
PFT-8B-BLK-100X1	TUBE, NYLON	C608-100BLK	15 IN LONG
PFT-8B-BLK-100X7	TUBE, NYLON	C608-100BLK	7 IN LONG
PFT-8B-BLK-100X36	HOSE, NONME.	C608-100BLK	36 IN LONG
PFT-8B-BLK-100X50	TUBE, NYLON	C608-100BLK	50 IN LONG
PFT-8B-BLK-100X60	TUBE, NYLON	C608-100BLK	60 IN LONG
PFT-8B-BLK-100X78	TUBE, NYLON	C608-100BLK	78 IN LONG
PFT-8B-BLK-100X100	TUBE, NYLON	C608-100BLK	100 IN LONG
PFT-8B-BLK-100X115	TUBE, NYLON	C608-100BLK	115 IN LONG
PFT-8B-BLK-100X121	TUBE, NYLON	C608-100BLK	121 IN LONG
PFT-8B-BLK-100X130	TUBE, NYLON	C608-100BLK	130 IN LONG
PFT-8B-BLK-100X140	TUBE, NYLON	C608-100BLK	140 IN LONG
P52-6738	COUPLING ASSEMBLY	24032	CUT TO FIT
04-9323-013	PIPE, FLEX	R342S5 25	13 IN LONG
05-09562-005	HOSE, NEOPRENE	24244	5 IN LONG
05-09562-006	HOSE, STRAIGHT	24240	6 IN LONG

Table 2. Manufactured Items - Continued.

PART NUMBER	NAME	MANUFACTURED FROM	DESCRIPTION
05-09564-008	HOSE, NEOPRENE	24248	8 IN LONG
05-12538-036	HOSE, STRAIGHT	4230-0174	36 IN LONG
05-12539-043	HOSE, RUBBER	28430	43 IN LONG
05-15224-004	LINER, PLYWOOD	24228	4 IN LONG
06-18131-000	TUBE, NYLON	CS122-56 GRADE CD INTERIOR TYPE	7X7.5 IN
12-13366-040	TUBE, NYLON	PFT-4A BLACKX1300	40 IN LONG
12-13367-045	TUBE, NYLON	3250-061	45 IN LONG
12-13367-060	TUBE, NYLON	PFT-4A BLACKX1300	60 IN LONG
12-13367-105	TUBE, NYLON	3250-061	105 IN LONG
12-13367-142	TUBE, NYLON	PFT-4A BLACKX1300	142 IN LONG
12-13367-200	TUBE, NYLON	PFT-4A BLACKX1300	200 IN LONG
12-13370-037	TUBE, NYLON	PFT-4A BLACKX1300	37 IN LONG
12-13371-037	TUBE, NYLON	PFT-4A BLACKX1300	37 IN LONG
12-13374-006	TUBE, NYLON	3250-061	6 IN LONG
12-13472-019	TUBE, NYLON	PFT-4A BLACKX1300	19 IN LONG
12-13473-040	TUBE, NYLON	PFT-4A BLACKX1300	40 IN LONG
18-11197-001X10	TRIM, EDGING	48-02188-001	10 FT LONG
22-21952-004	HOSE	4230-0002	4 IN LONG
22-21952-018	HOSE	4230-0002	18 IN LONG
22-21952-020	HOSE	4230-0002	20 IN LONG
22-21952-048	HOSE	4230-0002	48 IN LONG
22-21952-052	HOSE	4230-0002	52 IN LONG
22-21952-063	HOSE, HEATER	4230-0002	63 IN LONG
22-28607-018	HOSE, HEATER	350357	18 IN LONG
22-28607-061	HOSE, RUBBER	MS521301A203R	6 IN LONG
22-30167-030	HOSE, HEATER	4230NX-5/8	30 IN LONG
22-30168-003	HOSE, HEATER	4230NX-3/4	3 FT LONG
22-30168-034	HOSE, HEATER	4230NX-3/4	34 IN LONG
22-35191-010	SEAL	48-02412-525	CUT TO FIT
22-35281-016	HOSE, RUBBER	35055	16 IN LONG
22-35281-030	HOSE, RUBBER	35055	30 IN LONG
22-35282-025	HOSE, RUBBER	35056	25 IN LONG

Table 2. Manufactured Items - Continued.

PART NUMBER	NAME	MANUFACTURED FROM	DESCRIPTION
22-35282-090	HOSE, RUBBER	35056	90 IN LONG
22-35282-135	HOSE, RUBBER	35056	135 IN LONG
23323FX-48	HOSE, NONMETALLIC	3250-061	48 IN LONG
350359X0.3	HOSE, COOLANT	4230-0174	0.3 FT LONG
350359X1.8	HOSE, COOLANT	4230-0174	1.8 FT LONG
350359X3.5	HOSE, COOLANT	4230-0174	3.5 FT LONG
350359X3.8	HOSE, COOLANT	4230-0174	3.8 FT LONG
4246-0410X5	TUBING, NYLON	PFT-4A BLACKX1300	5 FT LONG
47336AX	HOSE, NONMETALLIC	FC350-06	12 IN LONG
47338AX	HOSE, NONMETALLIC	FC350-10	19 IN LONG
48-00050-206X6	TAPE, FOAM	V532X 3/4 INX200FT	6 FT LONG
48-00081-038X24	HOSE	28430	24 IN LONG
48-00099-150X3	HOSE	24224	3 IN LONG
48-00100-010X5	TUBING, NYLON	PFT-4A BLACKX1300	5 FT LONG
48-00100-010X10	TUBING, NYLON	PFT-4A BLACKX1300	10 FT LONG
48-00100-010X15	TUBING, NYLON	PFT-4A BLACKX1300	15 FT LONG
48-00100-812X15	TUBING, NYLON	C602	15 IN LONG
48-00100-812X18	TUBING, NYLON	C602	18 IN LONG
48-00100-814X16	TUBING, NYLON	C602	16 IN LONG
48-00100-815X15	TUBING, NYLON	C602	15 IN LONG
48-00100-816X6	TUBING, NYLON	C602	6 IN LONG
48-00100-816X18	TUBING, NYLON	C602	18 IN LONG
48-00100-816X48	TUBING, NYLON	C602	48 IN LONG
48-00100-829X12	TUBING, NYLON	C602	12 IN LONG
48-00100-829X36	TUBING, NONMETALLIC	4246-02277	36 IN LONG
48-00100-829X56	TUBING, NYLON	C602	56 IN LONG
48-00101-010X7	TUBE, NYLON	3250-061	7 FT LONG
48-00101-010X48	HOSE	PFT-6B-BLK-100	48 IN LONG
48-00101-010X72	HOSE	PFT-6B-BLK-100	72 IN LONG
48-00101-010X96	HOSE	PFT-6B-BLK-100	96 IN LONG
48-00101-010X144	HOSE	PFT-6B-BLK-100	144 IN LONG
48-00101-010X180	HOSE	PFT-6B-BLK-100	180 IN LONG

Table 2. Manufactured Items - Continued.

PART NUMBER	NAME	MANUFACTURED FROM	DESCRIPTION
48-00101-010X264	HOSE	PFT-6B-BLK-100	264 IN LONG
48-00101-020X24	HOSE, NONMETALLIC	C608-100BLK	24 IN LONG
48-00101-020X48	HOSE, NONMETALLIC	C608-100BLK	48 IN LONG
48-00101-020X96	NOSE, NONMETALLIC	C608-100BLK	96 IN LONG
48-00101-020X120	HOSE, NONMETALLIC	C608-100BLK	120 IN LONG
48-00101-022X1	TUBE, NYLON	48-00101-022	1 FT LONG
48-00101-030X10	TUBE, NYLON	3250-1010	10 FT LONG
48-00101-030X108	HOSE, NONMETALLIC	3250-1010	108 IN LONG
48-00121-016X30	HOSE	48-00121-016	30 IN LONG
48-00121-016X53	HOSE	48-00121-016	53. IN LONG
48-02014-008X48	HOSE	4251-0125	48 FT LONG
48-02015-012X24	HOSE, RUBBER	881-12	24 IN LONG
48-02217-025X5	CONDUIT, NONMETALLIC	64498R	5 FT LONG
48-02217-025X36	TUBING, NONMETALLIC	64498R	36 IN LONG
48-02217-050X3	CONDUIT	68237R	3 FT LONG
48-02217-050X8	CONDUIT	68237R	8 IN LONG
48-02217-062X3	CONDUIT	68237R	3 FT LONG
48-02217-062X105	CONDUIT	48-02218-050	105 IN LONG
48-02217-075X57.08	CONDUIT	68240R	57.08 IN LONG
48-02218-050X105	CONDUIT	48-02218-050	105 IN LONG
48-02218-075X12	CONDUIT	48-02218-075	12 IN LONG
48-02454-106X27	TAPE, FOAM	4516 5/8 in	27 IN LONG
48-02454-206X12	TAPE, URETH FOAM	V4062	12 FT LONG
48-02471-001X8	SEAL, DOOR	48-02471-001	8 FT LONG
48-02471-001X55	SEAL	48-02471-001	5.5 FT LONG
5156170	HOSE	MS521301A206R	2.5 IN LONG
68240R-276	CONDUIT	68240R	276 IN LONG
77620-7.5	HOSE	77551	7.5 IN LONG

Table 2. Manufactured Items - Continued.

PART NUMBER	NAME	
	AUTOMATIC SLACK ADJUSTER INSTALLATION TEMPLATE	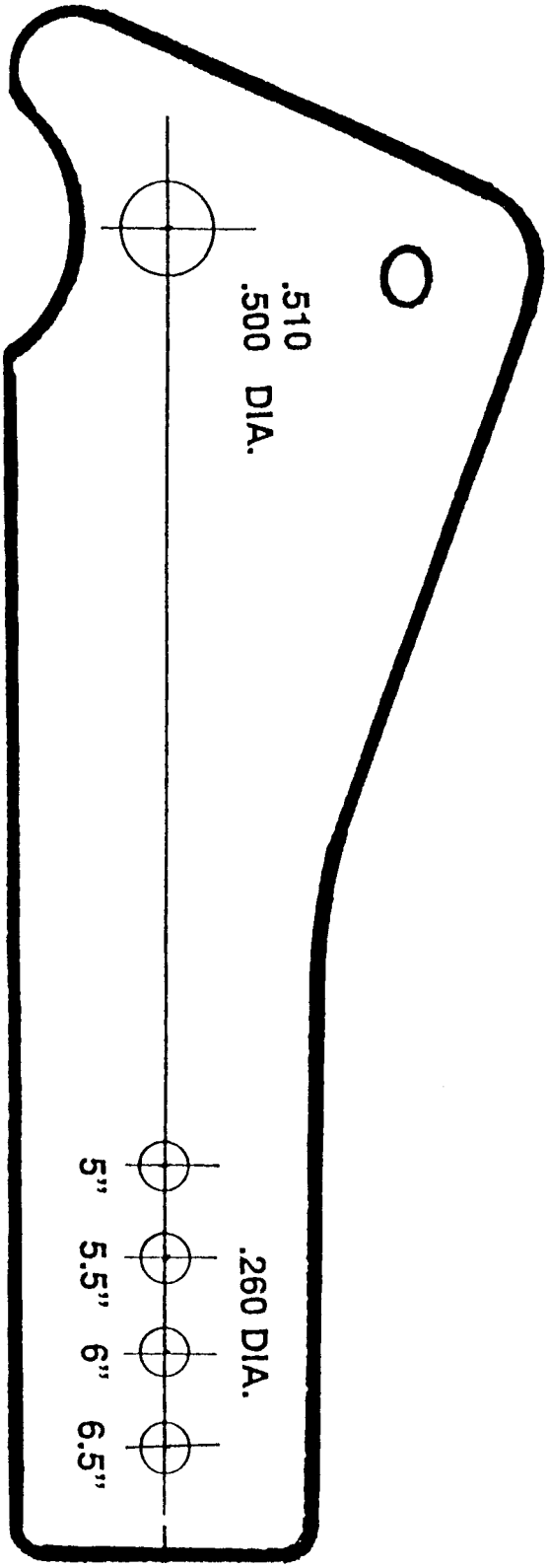

TORQUE LIMITS 0301 00

SCOPE

This work package lists standard torque values and provides general information for applying torque. Special torque values and tightening sequences are indicated in the maintenance procedures for applicable components.

GENERAL

1. Always use torque values listed in Table 1 when a maintenance procedure does not give a specific torque value.

2. Unless otherwise indicated, standard torque tolerance shall be ±10%.

3. Torque values listed are based on clean, dry threads. Reduce torque by 10% when engine oil is used as a lubricant. Reduce torque by 20% if new plated cap screws are used.

4. Cap screws threaded into aluminum may require reductions in torque of 30% or more of Grade 5 cap screw torque. Cap crew threaded into aluminum must also attain two cap screw diameters of thread engagement.

5. If the maintenance procedures do not specify a tightening order, use the following guides:

   a. Unless otherwise specified, lubricate threads of fasteners with oil (Item 21 or 22, WP 0305 00).

   b. When tightening fasteners above 30 lb-ft (41 Nm), use the torque pattern but only tighten to 70 percent of final value (multiply final value by 0.7). Repeat pattern until final value is reached.

   c. Tighten circular patterns using circular torque pattern. Tighten straight patterns using straight torque pattern.

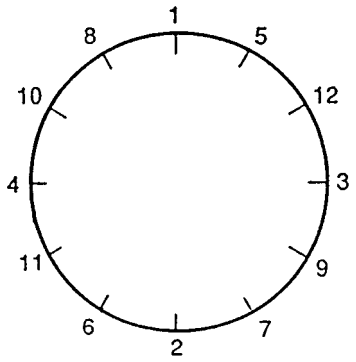

CIRCULAR TORQUE PATTERN

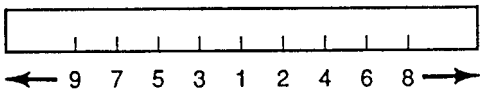

STRAIGHT TORQUE PATTERN

CAUTION

If replacement cap screws are of higher grade than originally supplied, use torque specifications for the original. This will prevent equipment damage due to overtorquing.

Table 1. Torque Limits.

CURRENT USAGE	MUCH USED	MUCH USED	USED AT TIMES	USED AT TIMES
QUALITY OF MATERIAL	**INDETERMINATE**	**MINIMUM COMMERCIAL**	**MEDIUM COMMERCIAL**	**BEST COMMERCIAL**
SAE Grade Number	1 or 2	5	6 or 7	8
Cap Screw Head Markings **Manufacturer's marks may vary** **These are all SAE Grade 5 (3 line)**	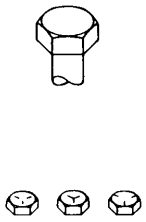			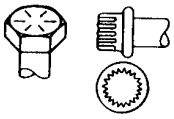
CAP SCREW BODY SIZE INCHES - THREAD	**TORQUE LB-FT (NM)**	**TORQUE LB-FT (NM)**	**TORQUE LB-FT (NM)**	**TORQUE LB-FT (NM)**
1/4 20	5 (7)	8 (11)	10 (14)	12 (16)
28	6 (8)	10 (14)		14 (19)
5/16 18	11 (15)	17 (23)	19 (26)	24 (33)
24	13 (18)	19 (26)		27 (37)
3/8 16	18 (24)	31 (42)	34 (46)	44 (60)
24	20 (27)	35 (47)		49 (66)
7/16 14	28 (38)	49 (66)	55 (75)	70 (95)
20	30 (41)	55 (75)		78 (106)
1/2 13	39 (53)	75 (102)	85 (115)	105 (142)
20	41 (56)	85 (115)		120 (163)
9/16 12	51 (69)	110 (149)	120 (163)	155 (210)
18	55 (75)	120 (163)		170 (231)
5/8 11	83 (113)	150 (203)	167 (226)	210 (285)
18	95 (129)	170 (231)		240 (325)
3/4 10	105 (142)	270 (366)	280 (380)	375 (508)
16	115 (156)	295 (400)		420 (569)
7/8 9	160 (217)	395 (536)	440 (597)	605 (820)
14	175 (237)	435 (590)		675 (915)
1 8	235 (319)	590 (800)	660 (895)	910 (1234)
14	250 (339)	660 (895)		990 (1342)

CHAPTER 4
SUPPORTING INFORMATION

REFERENCES 0302 00

SCOPE

This work package lists all forms, field manuals, technical bulletins, technical manuals, and other publications referenced in this manual and which apply to Unit Maintenance of the M915 Family of Vehicles.

PUBLICATIONS INDEXES

The following indexes should be consulted frequently for latest changes or revisions and for new publications relating to material covered in this technical manual.

Consolidated Index of Army Publications and Blank Forms . . . . . DA Pam 25-30

Functional User's Manual for the Army Maintenance Management System. . . . . DA Pam 738-750

U.S. Army Equipment Index of Modification Work Orders. . . . . DA Pam 750-10

FORMS

Refer to DA Pam 738-750, *The Army Maintenance Management System (TAMMS)*, for instructions on the use of maintenance forms.

Equipment Inspection and Maintenance Worksheet. . . . . DA Form 2404, DA Form 5988-E

Equipment Log Assembly (Records) . . . . . DA Form 2408

Maintenance Request Form . . . . . DA Form 2407

Preventive Maintenance Schedule and Record. . . . . DD Form 314

Processing and Deprocessing Record for Shipment, Storage and Issue of Vehicles and Spare Engines . . . . . DD Form 1397

Product Quality Deficiency Report. . . . . SF Form 368

Recommended Changes to Equipment Technical Publications . . . . . DA Form 2028-2

Recommended Changes to Publications and Blank Forms . . . . . DA Form 2028

Report of Discrepancy (ROD) . . . . . SF Form 364

FIELD MANUALS

Camouflage . . . . . FM 5-20

First Aid Manual. . . . . FM 4-25.11

Operation and Maintenance of Ordnance Material in Extreme Cold Weather (0 F to -65 F) . . . . . FM 9-207

Recovery and Battlefield Damage Assessment and Repair . . . . . FM 9-43-2

Rigging Techniques, Procedures and Application . . . . . FM 5-125

TECHNICAL BULLETINS AND SUPPLY BULLETINS

Color, Marking, and Camouflage Painting of Military Vehicles, Construction Equipment, and Materials Handling Equipment. . . . . TB 43-0209

Corrosion Prevention and Control Including Rustproofing Procedures for Tactical Vehicles and Trailers . . . . . TB 43-0213

Solder and Soldering. . . . . TB SIG 222

Use of Antifreeze Solutions and Cleaning Compounds in Engine Cooling Systems. . . . . TB 750-651

Warranty Bulletin for M915 Family of Vehicles . . . . . TB 9-2320-302-15

REFERENCES - CONTINUED 0302 00

TECHNICAL MANUALS

Administrative Storage of Equipment . . . . . TM 740-90-1

Cooling Systems: Tactical Vehicles . . . . . TM 750-254

Inspection, Care, and Maintenance of Antifriction Bearings . . . . . TM 9-214

Operator's and Organizational Maintenance Manual Including Repair Parts and Special Tool List for Decontaminating Apparatus, Portable . . . . . TM 3-4230-214-12&P

Operator's, Unit, Direct Support and General Maintenance Manual for Care, Maintenance, Repair and Inspection of Pneumatic Tires and Inner Tubes . . . . . TM 9-2610-200-14

Operator's, Organizational, Direct Support, and General Support Maintenance Manual for Lead-acid Storage Batteries . . . . . TM 9-6140-200-14

Operator's Manual for M915 Family of Vehicles . . . . . TM 9-2320-302-10

Operator's Circular Welding Theory and Application . . . . . TC 9-237

Operator's, Unit, Direct Support Maintenance Manual with RPSTL for M917A2 and M917A2 w/MCS Dump Truck Body . . . . . TM 5-3805-264-14&P

Painting Instruction for Field Use . . . . . TM 43-0139

Preservation, Packaging, and Packing of Military Supplies and Equipment . . . . . TM 38-230-1 & TM 38-230-2

Procedures for Destruction of Tank-automotive Equipment to Prevent Enemy Use . . . . . TM 750-244-6

Repair Parts and Special Tools Lists for M915 Family of Vehicles . . . . . TM 9-2320-302-24P

Unit, Direct Support and General Support Maintenance Manual for M915A4 . . . . . TM 9-2320-303-24-3

Use of Antifreeze Solutions, Antifreeze Extender, Cleaning Compounds, and Test Kit in Engine Cooling Systems . . . . . TM 750-651

OTHER PUBLICATIONS

Abbreviations and Acronyms . . . . . ASME Y14-38-1999

Army Medical Department Expendable/Durable Items . . . . . CTA 8-100

Expendable/Durable Items (Except Medical, Class V Repair Parts, and Heraldic Items . . . . . CTA 50-970

Fuels and Lubricants Standardization Policy for Equipment Design, Operation, and Logistic Support . . . . . AR 70-12

Vehicle, Wheeled, Preparation for Shipment and Limited Storage of MIL-V-62038E

END OF WORK PACKAGE

MAINTENANCE ALLOCATION CHART (MAC) INTRODUCTION 0303 00

THE ARMY MAINTENANCE SYSTEM MAC

1. This introduction provides a general explanation of all maintenance and repair functions authorized at the two maintenance levels under the Two-Level Maintenance System concept.
2. The MAC immediately following the introduction designates overall authority and responsibility for the performance of maintenance functions on the identified end item or component. The application of the maintenance functions to the end item or component shall be consistent with the capacities and capabilities of the designated maintenance levels, which are shown in the MAC (WP 0316 00) in column (4) as:

   Field - includes subcolumns:

   C - Operator/Crew
   O - Unit
   F - Direct Support

   Sustainment - includes subcolumns:

   H - General Support
   D - Depot
3. The tools and test equipment requirements (immediately following the MAC) list the tools and test equipment (both special tools and common tool sets) required for each maintenance function as referenced from the MAC.
4. The remarks (immediately following the tools and test equipment requirements) contain supplemental instructions and explanatory notes for a particular maintenance function.

MAINTENANCE FUNCTIONS

Maintenance functions are limited to and defined as follows:

1. **Inspect.** To determine the serviceability of an item by comparing its physical, mechanical, and/or electrical characteristics with established standards through examination (e.g., by sight, sound, or feel).
2. **Test.** To verify serviceability by measuring the mechanical, pneumatic, hydraulic or electrical characteristics of an item and comparing those characteristics with prescribed standards on a scheduled basis, i.e., load testing of lift devices and hydrostatic testing of pressure hoses.
3. **Service.** Operations required periodically to keep an item in proper operating condition; e.g., to clean (includes decontaminate, when required), to preserve, to drain, to paint or to replenish fuel, lubricants, chemical fluids or gases.
4. **Adjust.** To maintain or regulate, within prescribed limits, by bringing into proper position, or by setting the operating characteristics to specified parameters.
5. **Align.** To adjust specified variable elements of an item to bring about optimum or desired performance.
6. **Calibrate.** To determine and cause corrections to be made or to be adjusted on instruments of test, measuring, and diagnostic equipment used in precision measurement. Consists of comparisons of two instruments, one of which is a certified standard of known accuracy, to detect and adjust any discrepancy in the accuracy of the instrument being compared.
7. **Remove/Install.** To remove and install the same item when required to perform service or other maintenance functions. Install may be the act of emplacing, seating or fixing into position a spare, repair part or module (component or assembly) in a manner to allow the proper functioning of an equipment or system.
8. **Replace.** To remove an unserviceable item and install a serviceable counterpart in its place. “Replace” is authorized by the MAC and its assigned maintenance level is shown as the third position code of the Source, Maintenance and Recoverability (SMR) code.
9. **Repair.** The application of maintenance services, including fault location/troubleshooting, removal/installation, disassembly/assembly procedures, and maintenance actions to identify troubles and restore serviceability to an item by correcting specific damage, fault, malfunction or failure in a part, subassembly, module (component or assembly), end item or system.

MAINTENANCE FUNCTIONS - CONTINUED

NOTE

The following definitions are applicable to the "repair" maintenance function:

- Services - Inspect, test, service, adjust, align, calibrate, and/or replace.
- Fault location/troubleshooting - The process of investigating and detecting the cause of equipment malfunctioning; the act of isolating a fault within a system or Unit Under Test (UUT).
- Disassembly/assembly - The step-by-step breakdown (taking apart) of a spare/functional group coded item to the level of its least component, that is assigned an SMR code for the level of maintenance under consideration (i.e., identified as maintenance significant).
- Actions - Welding, grinding, riveting, straightening, facing, machining, and/or resurfacing.

10. **Overhaul.** That maintenance effort (service/action) prescribed to restore an item to a completely serviceable/operational condition as required by maintenance standards in appropriate technical publications. Overhaul is normally the highest degree of maintenance performed by the Army. Overhaul does not normally return an item to like new condition.

11. **Rebuild.** Consists of those services/actions necessary for the restoration of unserviceable equipment to a like new condition in accordance with original manufacturing standards. Rebuild is the highest degree of materiel maintenance applied to Army equipment. The rebuild operation includes the act of returning to zero those age measurements (hours/miles, etc.) considered in classifying Army equipment/components.

EXPLANATION OF COLUMNS IN THE MAC, TABLE 1

1. **Column (1) - Group Number.** Column (1) lists FGC numbers, the purpose of which is to identify maintenance significant components, assemblies, subassemblies, and modules with the Next Higher Assembly (NHA).

2. **Column (2) - Component/Assembly.** Column (2) contains the item names of components, assemblies, subassemblies, and modules for which maintenance is authorized.

3. **Column (3) - Maintenance Function.** Column (3) lists the functions to be performed on the item listed in Column (2). (For a detailed explanation of these functions refer to "Maintenance Functions" outlined above).

4. **Column (4) - Maintenance Level.** Column (4) specifies each level of maintenance authorized to perform each function listed in column (3), by indicating work time required (expressed as manhours in whole hours or decimals) in the appropriate subcolumn. This work time figure represents the active time required to perform that maintenance function at the indicated level of maintenance. If the number or complexity of the tasks within the listed maintenance function varies at different maintenance levels, appropriate work time figures are to be shown for each level. The work time figure represents the average time required to restore an item (assembly, subassembly, component, module, end item or system) to a serviceable condition under typical field operating conditions. This time includes preparation time (including any necessary disassembly/assembly time), troubleshooting/fault location time, and quality assurance time in addition to the time required to perform the specific tasks identified for the maintenance functions authorized in the MAC. The symbol designations for the various maintenance levels are as follows:

Field:

C - Operator/Crew Maintenance
O - Unit Maintenance
D - Direct Support Maintenance

Sustainment:

H - General Support Maintenance
D - Depot Maintenance

EXPLANATION OF COLUMNS IN THE MAC, TABLE 1 - CONTINUED

NOTE

The “L” maintenance level is not included in column (4) of the MAC. Functions to this level of maintenance are identified by a work time figure in the “H” column of column (4), and an associated reference code is used in the REMARKS CODE column (6). This code is keyed to the remarks and the SRA complete repair application is explained there.

5. **Column (5) - Tools and Equipment Reference Code.** Column (5) specifies, by code, those common tool sets (not individual tools), common Test, Measurement and Diagnostic Equipment (TMDE), and special tools, special TMDE, and special support equipment required to perform the designated function. Codes are keyed to the entries in the tools and test equipment table.
6. **Column (6) - Remarks Code.** When applicable, this column contains a letter code, in alphabetical order, which is keyed to the remarks table entries (Table 3).

EXPLANATION OF COLUMNS IN THE TOOLS AND TEST EQUIPMENT REQUIREMENTS, TABLE 2

1. **Column (1) - Tool or Test Equipment Reference Code.** The tool and test equipment reference code correlates with a code used in column (5) of the MAC.
2. **Column (2) - Maintenance Level.** The lowest level of maintenance authorized to use the tool or test equipment.
3. **Column (3) - Nomenclature.** Name or identification of the tool or test equipment.
4. **Column (4) - National Stock Number (NSN).** The NSN of the tool or test equipment.
5. **Column (5) - Tool Number.** The manufacturer's part number, model number or type number.

EXPLANATION OF COLUMNS IN THE REMARKS, TABLE 3

1. **Column (1) - Remarks Code.** The code recorded in column (6) of the MAC.
2. **Column (2) - Remarks.** This column lists information pertinent to the maintenance function being performed as indicated in the MAC. Model designations used in column (2) are defined as follows:
   - 5A3 = M915A3 Truck, Tractor, Line Haul, Both Old and New Models.
   - 5A3 Old Model = M915A3 Truck, Tractor, Line Haul serial numbers up to H77205 and vehicle J64175 only.
   - 5A3 New Model = M915A3 Truck, Tractor, Line Haul serial numbers J21548 and above.
   - 6A3 = M916A3 Truck, Tractor, Light Equipment Transporter (LET).
   - 7A2 = M917A2 and M917A2 w/MCS Truck, Dump, Heavy.

END OF WORK PACKAGE

Table 1. MAC for the M915 Family of Vehicles.

(1)	(2)	(3)	(4) MAINTENANCE LEVEL					(5)	(6)
			FIELD			SUSTAINMENT			
GROUP NUMBER	COMPONENT/ ASSEMBLY	MAINTENANCE FUNCTION	UNIT		DS	GS	DEPOT	TOOLS AND EQUIPMENT REF CODE	REMARKS CODE
01	**ENGINE**								
0100	Engine Assembly	Inspect	0.3						
		Test		0.5	0.5			2,22,75,89,129	
		Service		2.0				110,134	
		Replace			17.0			108,113,123	
		Repair				18.0		108,113,134	
		Overhaul					30.0	108,109,134	
	Engine Mounts	Replace			0.8			108,134	
0101	Crankcase, Block, Cylinder Head								
	Cylinder Head Assembly	Replace			4.0			17,30,42,59,108, 134	
		Repair				10.4		4,12,17,23, 42,54,70,83, 93,95,96, 97,99,100, 109,112,134	
	Cylinder Block	Inspect				1.0		108	
		Test				1.0		3,108,127,128, 134	
		Replace				6.0		108,134	
		Repair				12.0		3,4,10,11,12,33, 42,54,85,90, 108,109,127, 128,134	
0102	Crankshaft								
	Crankshaft Assembly	Inspect				0.5		109	
		Replace				17.3		40,91,109,134	
		Repair			1.0			108,134	
	Main Seals	Replace			1.0			52,94,108,134	
0103	Flywheel Housing	Replace				1.0		79,108,134	
0104	Rod, Piston and Pin	Inspect				0.5		109	
		Replace				18.0		18,23,35,88, 109,134	
0105	Valves, Camshafts, and Timing System								
	Rocker Arm Assemblies	Inspect			0.4			108,134	
		Replace			2.8			33,58,73,78,84	
	Rocker Arm Cover Housing	Replace			0.5			108,134	

Table 1. MAC for the M915 Family of Vehicles - Continued.

(1)	(2)	(3)	(4) MAINTENANCE LEVEL					(5)	(6)
			FIELD			SUSTAINMENT			
GROUP NUMBER	COMPONENT/ ASSEMBLY	MAINTENANCE FUNCTION	UNIT		DS	GS	DEPOT	TOOLS AND EQUIPMENT REF CODE	REMARKS CODE
01	**ENGINE - Continued**								
	Camshaft Assembly	Inspect			0.4			108	
		Replace			3.0			77,81,108,118, 134	
	Camshaft Drive Gear	Inspect			0.2				
		Replace			1.0			29,51,108,134	
0106	Engine Lubrication System								
	Oil Pan	Replace			0.8			108,110	
		Repair			1.0			108,110	
	Oil Filter	Replace		0.8				110	
		Service		1.0				110	G
	Oil Filter Adapter	Replace			1.5			110,134	
	Oil Cooler Core	Replace			3.0			110,134	
	Oil Pump Assembly	Replace			1.0			108,134	
		Repair				3.0		108,134	
	Regulator Valve Assembly	Replace			0.5			108,134	
0108	Manifolds								
	Exhaust Manifold	Replace			1.4			31,108,134	
	Intake Manifold	Replace			1.0			31,108,134	
0109	Accessory Driving Mechanisms								
	Accessory Drive	Replace			1.0			16,108,134	
		Repair			3.0			59,108	
	Bull/Idler Gears	Replace				1.5		6,8,79,80,87, 106,108,134	
0112	Engine Retarder Assembly	Test			0.8			75,129	
		Adjust			0.5			108,134	
		Replace			0.5			108,134	
		Repair			4.3			108,134	
0125	Accessory Drive Gear Case and Front Cover	Replace			1.8			31,87,108, 134	
03	**FUEL SYSTEM**								
0301	Fuel Injector Assembly	Replace			2.0			108,134	
		Repair			1.8			108,134	
0302	Fuel Pump	Replace			0.5			134	
0304	Air Cleaner Assembly	Replace		0.3				134	
	Air Intake Assembly	Replace		0.2				134	

Table 1. MAC for the M915 Family of Vehicles - Continued.

(1)	(2)	(3)	(4) MAINTENANCE LEVEL					(5)	(6)
			FIELD			SUSTAINMENT			
GROUP NUMBER	COMPONENT/ ASSEMBLY	MAINTENANCE FUNCTION	UNIT		DS	GS	DEPOT	TOOLS AND EQUIPMENT REF CODE	REMARKS CODE
03	**FUEL SYSTEM - Continued**								
0305	Turbocharger	Replace			0.8			5,107,108,134	
		Repair				3.0		108,134	
	Wastegate	Adjust			0.2			39,140	
		Replace			0.5			140	
0306	Tanks, Lines, Fittings, Headers								
	Fuel Tank	Inspect	0.1	0.1					
		Replace		2.0				110,134	
	Fuel Return Cooler	Replace		0.7				110	
	Fuel Hoses, Lines, and Fittings	Replace		0.5				133	
0309	Fuel Filter Elements	Service	0.1						
		Replace		0.3				110	
0311	Engine Starting Aids								
	Ether Starting Aid (Auto)	Inspect	0.1						
		Replace		1.0				134	
		Repair		0.5				134	
		Service		0.5				134	
0312	Electronic Throttle Assembly	Replace		0.3				134	
04	**EXHAUST SYSTEM**								
0401	Muffler and Pipes								
	Muffler	Inspect	0.1	0.1					
		Replace		0.5				134	
	Exhaust Pipe	Inspect	0.1	0.1					
		Replace		1.3				134	
05	**COOLING SYSTEM**								
0501	Radiator Assembly	Service	0.1	0.3				110	
		Replace		0.7				82,83,110,134	
		Repair			0.5			109	A
0502	Fan Shroud	Replace		1.0				134	
0503	Thermostat Housing	Replace		0.5				134	
		Repair		0.5				33,60,134	
0504	Water Pump Assembly	Replace		3.0				110,134	
0505	Fan Assembly								
	Fan Drive Support	Replace			0.6			108,134	

Table 1. MAC for the M915 Family of Vehicles - Continued.

(1)	(2)	(3)	(4) MAINTENANCE LEVEL					(5)	(6)
			FIELD			SUSTAINMENT			
GROUP NUMBER	COMPONENT/ ASSEMBLY	MAINTENANCE FUNCTION	UNIT		DS	GS	DEPOT	TOOLS AND EQUIPMENT REF CODE	REMARKS CODE
05	**COOLING SYSTEM - Continued**								
	Fan Clutch and Drive	Replace		2.0				134	
		Repair				1.5		108,134	
	Fan Belt	Inspect	0.1						
		Replace		0.5				134	
	Spindle and Housing	Replace		1.5				108,134	
		Repair				3.0		134	
0508	Water Filter	Replace		0.3				110	
06	**ELECTRICAL SYSTEM**								
0601	Generator, Alternator								
	Alternator	Test		0.3		0.5		75,109,111,129	
		Replace		0.3				134	
		Repair				2.0		109,133	K
	Drive Belt	Inspect	0.1						
		Replace		0.5				134	
0602	Voltage Regulator	Replace		0.5				134	
0603	Starter	Replace		1.5				134	
		Repair				2.0		114,139	
0605	Ignition Components								
	Engine Harnesses (Electrical)	Test		0.2				111	
		Replace			1.0			134	
		Repair		0.3				111,134	
	Engine Harnesses (Electronic)	Test		0.3				111	
		Replace			0.5			134	
	Daytime Running Lights Control Unit	Replace		0.5				134	G
	Injector Wiring Harness	Test		0.2				34,111,134	
		Replace			1.0			108	
		Repair			0.3			108,124,135	
0607	Instrument Panel								
	Instrument Panel Switches	Replace		0.3				134	
	Turn Signal Switches	Replace		0.3				134	
0608	Miscellaneous Items								
	Engine ECU	Test		0.3				75,122,129	
		Replace		0.3				134	D

Table 1. MAC for the M915 Family of Vehicles - Continued.

(1)	(2)	(3)	(4) MAINTENANCE LEVEL					(5)	(6)
			FIELD			SUSTAINMENT			
GROUP NUMBER	COMPONENT/ ASSEMBLY	MAINTENANCE FUNCTION	UNIT		DS	GS	DEPOT	TOOLS AND EQUIPMENT REF CODE	REMARKS CODE
06	**ELECTRICAL SYSTEM - Continued**								
	ABS ECU	Test		0.3				1,75, 122,129	
		Replace		0.5				134	
	Transmission ECU	Test		0.3				84,122,129	
		Replace		0.5				134	
	CTIS Control Panel/ ECU	Test		0.5				84,122,129	I
		Inspect	0.1	0.5				134	I
		Replace		0.3				134	I
	Collision Warning System (CWS) ECU	Test		0.3				84,122,129	F
		Replace		0.3				134	F
	Fuse, Relay, and Circuit Breaker Panel	Inspect	0.1						
		Replace		0.1				134	
	Remote Control Unit, MCS	Inspect	0.1						L
		Replace		0.5				134	L
		Repair		1.0				134	L
0609	Lights								
	Headlights	Inspect	0.1						
		Adjust		0.3				134	
		Repair		0.2				134	
	Taillights	Inspect	0.1						
		Replace		0.2				134	
	Blackout Lights	Inspect	0.1						
		Replace		0.2				134	
	Side Marker Lights	Inspect	0.1						
		Replace		0.3				134	
	Fog Lamps (If Equipped)	Replace		0.3				134	
		Repair		0.2				134	
	Marker Clearance Lights	Inspect	0.1						
		Replace		0.3				134	
0610	Sending Units and Warning Switches								
	Air Pressure Warning Sensors	Replace		0.5				134	
	ABS Sensors	Replace		0.5				134	
	Engine Sensors	Test		0.2				134	
		Replace		0.5				134	

Table 1. MAC for the M915 Family of Vehicles - Continued.

(1)	(2)	(3)	(4) MAINTENANCE LEVEL					(5)	(6)
			FIELD			SUSTAINMENT			
GROUP NUMBER	COMPONENT/ ASSEMBLY	MAINTENANCE FUNCTION	UNIT		DS	GS	DEPOT	TOOLS AND EQUIPMENT REF CODE	REMARKS CODE
06	**ELECTRICAL SYSTEM - Continued**								
0611	Horn, Siren								
	Electric Horn	Replace		0.2				134	
	Backup Alarm	Replace		0.2				134	J
0612	Batteries								
	Batteries	Test		0.2				111	
		Replace		0.5				134	B
	Master Battery Switch	Replace		0.5				134	
	Battery Equalizer	Replace		0.5				134	
		Test		0.2					
0613	Chassis Wiring Harnesses								
	Chassis Harness	Test		0.2				111	
		Replace			2.0			134	
		Repair		0.3				111,134	
	Cab Harness	Test		0.2				111	
		Replace			2.0			134	
		Repair		0.3				111,134	
	ABS, Electrical Harnesses	Test		0.2				111	
		Replace		0.5				134	
	Overhead Cab Harness	Test		0.2				111	
		Replace			0.2			134	
		Repair			0.3			111,134	
	Light Harness	Replace		1.0				134	J
		Repair		0.3				111,134	J
	MCS Harness	Replace		0.5				134	L
		Repair		0.5				111,134	L
	Body Up/Transport Lock Harness	Replace		0.3				134	J
		Repair		0.3				111,134	J
07	**TRANSMISSION**								
0705	Transmission Shifting Components								
	Shift Tower Controls	Replace		0.3				134	
		Repair		1.5				134	
	Wiring Harness	Replace		0.5				134	
	Sensors	Replace		0.3				134	
	Control Module	Replace				1.0		134	

Table 1. MAC for the M915 Family of Vehicles - Continued.

(1)	(2)	(3)	(4) MAINTENANCE LEVEL					(5)	(6)
			FIELD			SUSTAINMENT			
GROUP NUMBER	COMPONENT/ ASSEMBLY	MAINTENANCE FUNCTION	UNIT		DS	GS	DEPOT	TOOLS AND EQUIPMENT REF CODE	REMARKS CODE
07	**TRANSMISSION - Continued**								
0710	Fill/Check Tube	Replace		0.3				134	
	Yoke	Replace			0.3			134	
	Transmission Assembly	Service		1.0				110,134	
		Test		0.3	0.5			129	
		Replace			8.0			8,13,14,108, 113,134	
		Repair				10.0		13,14,15,19,20, 38,41,45,46,47, 48,50,68,69, 76,89,98,102, 103,105,108, 111,116,134,137	
	Torque Converter	Replace			0.5			74,134	
		Repair				1.0		27,49,108,140	
	Flex Plate and Ring Gear	Replace			8.0			78,108,134	
	Flywheel Assembly	Replace			1.0			74,108,134	
		Repair				0.8		108,134	
	Oil Pan	Replace		0.5				111,134	
	Transmission Filters	Replace		0.5				111,134	
0721	Oil Cooler and Hoses	Replace		0.5				111,134	
08	**TRANSFER CASE**								I
0801	Transfer Case Assembly	Service		0.4					
		Test		0.1	0.1				
		Replace			4.0			108	
		Repair		0.5		4.0		108	
09	**PROPELLER SHAFTS**								
0900	Propeller Shaft Assembly	Inspect	0.1	0.2					
		Service		0.2				110	
		Replace		1.9				111,134	
		Repair		1.0				111,134	

Table 1. MAC for the M915 Family of Vehicles - Continued.

(1)	(2)	(3)	(4) MAINTENANCE LEVEL					(5)	(6)
			FIELD			SUSTAINMENT			
GROUP NUMBER	COMPONENT/ ASSEMBLY	MAINTENANCE FUNCTION	UNIT		DS	GS	DEPOT	TOOLS AND EQUIPMENT REF CODE	REMARKS CODE
10	**FRONT AXLE**								
1000	Front Axle Assembly	Inspect	0.3						E
		Service		0.1				110,134	E
		Align		1.0				110,134	E
		Replace			4.5			108,134	E
		Repair			4.0			108,134	E
	Front Axle Assembly	Inspect	0.1						I
		Service		0.5				110,134	I
		Aline		1.0				110,134	I
		Replace			4.0			108,134	I
		Repair			4.0			108,134	I
1002	Differential	Replace			8.0			109,134	I
		Repair				8.0		36,55,56,57,59, 64,67,69,71, 107,101, 104,117,109, 134	I
	Wheel End Assembly	Repair		1.0				24,64,65,86, 110,120,121, 134	I
1004	Tie Rod Knuckle	Replace			0.8			134	
		Repair			1.0			110,134	
11	**REAR AXLE**								
1100	Forward-rear Axle	Inspect	0.1						
		Service		0.2				110,117,134	
		Replace				4.5		108,134	
		Repair				8.0		110,134	
	Rear-rear Axle	Inspect	0.1						
		Service		0.2				110,117,134	
		Replace				3.0		108,134	
		Repair				8.0		109,134	
1102	Differential	Replace			1.0			109,134	
		Repair				10.5		36,109,117,134	
12	**BRAKES**								
1202	Service Brakes								
	Hanging Brake Assembly	Replace		1.0				134	
		Repair		0.3				134	
	Front Brakes	Inspect		0.7					
		Service		0.1				134	
		Adjust		0.5				134	
		Replace		2.0				110,134	

Table 1. MAC for the M915 Family of Vehicles - Continued.

(1) GROUP NUMBER	(2) COMPONENT/ ASSEMBLY	(3) MAINTENANCE FUNCTION	(4) MAINTENANCE LEVEL UNIT C	UNIT O	DS F	GS H	DEPOT D	(5) TOOLS AND EQUIPMENT REF CODE	(6) REMARKS CODE
12	**BRAKES - Continued**								
	Rear Brakes	Inspect		0.7					
		Service		0.1				134	
		Adjust		0.5				134	
		Replace		2.0				110,134	
1206	Slack Adjusters	Replace		0.3				125,134	
1208	Airbrake System								
	Brake Chambers	Inspect	0.1	0.2					
		Replace		1.3				134	
	Air Dryer	Service		0.5				134	
		Replace		0.5				134	
		Repair			0.8			108,134	
	Foot Brake Valve	Replace		0.2				134	
		Repair				1.0		108,134	
	Air Valves	Replace		0.3				134	
	Air Reservoir	Replace		0.3				134	
	ABS Valves	Replace		0.5				134	
		Repair		0.5				134	
1209	Air Compressor	Replace		1.0				110,134	
		Repair				4.0		39,109,134	
13	**WHEELS**								
1311	Wheel Assembly	Service	0.1						
		Inspect	0.1	0.5					
		Replace	1.0					110,134	
		Repair		0.1				110,134	
	Rear Hub and Drum	Replace		0.5				110,134	
		Repair				1.0		110,134	
	Front Hub and Drum	Replace		0.5				110,134	I
		Repair				1.0		37,110,134	I
	ABS Tone Ring	Replace		0.5				43,134	
	CTIS Wheel Valve	Replace		0.5				134	I
		Repair		0.3				134	I
	CTIS Pneumatic Control Unit	Replace		0.3				134	I
		Repair		1.0				134	I
	CTIS Lines, Hoses, Valves	Replace		0.2				134	I
	CTIS Switches and Sensors	Replace		0.2				134	I

Table 1. MAC for the M915 Family of Vehicles - Continued.

(1)	(2)	(3)	(4) MAINTENANCE LEVEL					(5)	(6)
			FIELD			SUSTAINMENT			
GROUP NUMBER	COMPONENT/ ASSEMBLY	MAINTENANCE FUNCTION	UNIT		DS	GS	DEPOT	TOOLS AND EQUIPMENT REF CODE	REMARKS CODE
13	**WHEELS - Continued**								
	CTIS Harness	Replace		0.1				134	I
		Repair			0.5			110,134	I
1313	Tires	Replace		0.1				110,134	
		Repair				0.5		134	C
14	**STEERING**								
1401	Mechanical Steering Gear Assembly								
	Steering System	Inspect	0.8	1.0					
		Test		1.0					
		Service		0.3	0.3			110,134	
	Steering Wheel	Replace		1.0				109,134	
	Tilt/Telescope Steering Column	Replace			1.0			134	
	Steering Universal Joint and Shaft	Replace		3.0				134	
		Repair		1.0				9,21,25,26,66, 134,138	
1407	Steering Gear	Replace			0.5			108,134	
		Repair				2.5		7,32,44,53,109, 119,121,134, 139	
1410	Power Steering Pump	Test			0.3			132,134	
		Replace			0.7			108,134	
		Repair				1.5		108,134	
1411	Power Steering Hoses	Inspect		0.1					
		Replace		0.5				134	
1413	Reservoir Assembly and Bracket	Service	0.1						
		Replace		1.0				134	
		Repair		1.0				111,134	
15	**FRAME ASSEMBLY**								
1501	Frame Components	Inspect	0.5	0.5					
		Replace			2.1			109,134	
	Ramp Assembly	Inspect	0.1						F
		Replace			0.3			109,134	F
	Tail Roller Assembly	Inspect	0.2						H
		Service		0.8				134	H
		Replace		0.2				111,134	H

Table 1. MAC for the M915 Family of Vehicles - Continued.

(1)	(2)	(3)	(4) MAINTENANCE LEVEL					(5)	(6)
			FIELD			SUSTAINMENT			
GROUP NUMBER	COMPONENT/ ASSEMBLY	MAINTENANCE FUNCTION	UNIT		DS	GS	DEPOT	TOOLS AND EQUIPMENT REF CODE	REMARKS CODE
15	**FRAME ASSEMBLY-Continued**								
1503	Pintle Hook	Inspect	0.1	0.2					
		Service		0.1				110	
		Replace		0.5				134	
		Repair		0.5				134	
1504	Spare Tire Carrier	Replace		1.0				134	
		Repair		0.5				134	
1506	Fifth Wheel								F
	Fifth Wheel Assembly	Inspect	0.3						
		Service		0.3				110	
		Adjust		1.0				28,130,131,134	
		Replace			2.0			114,134	
		Repair			1.0			134	
16	**SPRINGS AND SHOCKS**								
1601	Springs, Front	Replace			1.0			108,134	
	Springs, Rear	Replace			4.0			108,134	
1604	Shock Absorbers	Replace		0.5				134	
1605	Torque Rods	Replace			1.0			108,134	
18	**BODY,CAB, AND HOOD**								
1801	Body, Cab, and Hood								
	Cab Assembly	Inspect	0.1						
		Replace				4.0		115,134	
		Repair				3.0		109,134,136	
	Doors	Replace			0.4			134	
		Repair			0.7			134	
	Hood	Adjust		0.3				134	
		Replace		0.5				111,134	
		Repair			2.0			108,134	
1802	Fenders, Windshield, Glass								
	Windshield and Windows	Inspect	0.1						
		Replace			1.5			108,134	
	Quarter Fender	Replace		0.4				134	
1805	Floor Covers	Replace		1.0				134	

Table 1. MAC for the M915 Family of Vehicles - Continued.

(1)	(2)	(3)	(4) MAINTENANCE LEVEL					(5)	(6)
			FIELD			SUSTAINMENT			
GROUP NUMBER	COMPONENT/ ASSEMBLY	MAINTENANCE FUNCTION	UNIT		DS	GS	DEPOT	TOOLS AND EQUIPMENT REF CODE	REMARKS CODE
18	**BODY,CAB, AND HOOD - Continued**								
1806	Seats								
	Seat Belt Assembly	Inspect	0.1						
		Replace		0.5				134	
	Seat Assembly	Inspect	0.1	0.2					
		Replace		0.5				134	
		Repair		2.0				108,134	
1808	Storage Boxes	Replace		0.5				134	
		Repair		0.5				134	
1810	Cargo Body								J
	Dump Body Assembly	Inspect	0.1						
		Replace			4.0			108,134	
		Repair		1.0	1.0			108,134	
	Cylinder Support Frame	Replace			1.0			108,134	
	Tailgate, MCS	Inspect	0.1						L
		Replace		1.0				110,134	L
		Repair		0.5				110,134	L
	Air Cylinder, Tailgate Release	Replace		0.5				134	
		Repair		0.8				134	
	Air Cylinder, MCS	Replace		0.5				134	L
		Repair		1.0				134	L
	Air Lines/Hoses	Replace		0.5				134	
20	**WINCH AND PTO**								
2001	Winch Assembly	Inspect	0.1						H
		Service		2.0				111,134	
		Replace			1.4			108,134	
		Repair				8.0		108,134	
	Hydraulic Filter	Replace			0.3			134	
	Hydraulic Pump	Replace			2.0			108,134	
		Repair				1.0		134	
	Hydraulic Tank	Service		0.8				111,134	
		Replace		1.5				111,134	
		Repair		2.3				111,134	
	Counterbalance Valve	Test			0.5			108	
		Adjust		0.5				134	
		Replace			0.5			108,134	
		Repair			0.3			108,134	
	Hydraulic Motor	Replace			1.0			108,134	
		Repair				1.0		134	

Table 1. MAC for the M915 Family of Vehicles - Continued.

(1)	(2)	(3)	(4) MAINTENANCE LEVEL					(5)	(6)
			FIELD			SUSTAINMENT			
GROUP NUMBER	COMPONENT/ ASSEMBLY	MAINTENANCE FUNCTION	UNIT		DS	GS	DEPOT	TOOLS AND EQUIPMENT REF CODE	REMARKS CODE
20	**WINCH AND PTO - Continued**								
	Hydraulic Speed Control Valve	Adjust		0.5				134	
		Replace			0.3			108,134	
		Repair				0.5		134	
	Hydraulic Direction Control Valve	Adjust		0.5				134	
		Replace			0.5			108,134	
		Repair				0.5		134	
	Wire Rope	Inspect	0.1	0.5					
		Service	1.0						
		Replace		2.0				111,134	
2004	PTO Assembly								I
	PTO Control	Replace		0.3				134	
	Power Take-Off	Test		0.5					
		Replace			1.0			134	
		Repair				3.0		134	
22	**BODY, CHASSIS, ACCESSORY ITEMS**								
2201	Cargo Cover Assembly	Inspect	0.1						J
		Replace		0.5				134	J
		Repair		0.7	0.5			108,134	J
2202	Accessory Items								
	Mirrors	Replace		0.5				134	
		Repair		0.5				134	
	Windshield Washer and Motor	Service	0.1						
		Replace		1.2				134	
	Heater/Air Conditioner Controls	Replace		0.2				110,134	
2210	Data Plates	Replace		0.2				134	
24	**HYDRAULIC AND FLUID SYSTEMS**								J
2401	Hydraulic Pump	Replace			1.0			108,134	
		Repair			1.0			108,134	
	Hydraulic Motor	Replace			1.0			108,134	
		Repair				1.0		134	
2403	Dump Controls	Replace		0.5				134	
		Repair		1.0				134	

Table 1. MAC for the M915 Family of Vehicles - Continued.

(1)	(2)	(3)	(4) MAINTENANCE LEVEL					(5)	(6)
			FIELD			SUSTAINMENT			
GROUP NUMBER	COMPONENT/ ASSEMBLY	MAINTENANCE FUNCTION	UNIT		DS	GS	DEPOT	TOOLS AND EQUIPMENT REF CODE	REMARKS CODE
24	**HYDRAULIC AND FLUID SYSTEMS - Continued**								
2406	Filters, Lines, and Fittings								
	Filter Assembly	Service		0.3				134	
		Replace		0.5				134	
		Repair		0.3				134	
	Lines and Fittings	Replace		0.3				110,134	
2407	Cylinder Assembly	Replace			2.0			134	
		Repair			2.0			61,62,63,108, 134	
2408	Reservoir Assembly	Service	0.1						
		Replace		0.5				110,134	
		Repair		0.5				110,134	
33	**SPECIAL PURPOSE KITS**								
3303	Arctic Personnel and Engine Heater Kit	Install		2.0				134	
		Replace		1.0				134	
3307	Air Deflector Kit	Replace		1.0				134	F
34	**ARMAMENT MATERIAL**								
3402	Rifle Mounting Kit	Replace		0.5				134	
42	**ELECTRICAL EQUIPMENT**								
4209	Beacon Warning Light Kit	Install		0.5				134	
		Replace		0.5				134	
47	**GAGES (NON-ELECTRICAL)**								
4702	Air Pressure Gages	Replace		0.5				134	
52	**REFRIGERATION, AIR CONDITIONER/ HEATER, AND AIR CONDITIONING COMPONENTS**								
5200	Heater/Air Conditioner System	Inspect	0.1					71	
		Service			1.5			71,92,126,134	
		Replace			2.0			108,134	
		Repair		0.5	1.0			108,134	

Table 1. MAC for the M915 Family of Vehicles - Continued.

(1)	(2)	(3)	(4) MAINTENANCE LEVEL					(5)	(6)
			FIELD			SUSTAINMENT			
GROUP NUMBER	COMPONENT/ ASSEMBLY	MAINTENANCE FUNCTION	UNIT		DS	GS	DEPOT	TOOLS AND EQUIPMENT REF CODE	REMARKS CODE
52	**REFRIGERATION, AIR CONDITIONER/ HEATER, AND AIR CONDITIONING COMPONENTS - Continued**								
	Heater/Air Conditioner Controls	Replace		0.2				134	
5201	Compressor Drive								
	Compressor Clutch	Replace		0.8				35,134	
	Belt	Replace		1.0				110,134	
	Compressor	Replace			1.0			108,134	
5217	Valves and Lines	Replace			0.5			71,92,134	
5230	Condenser	Replace			1.0			71,92,134	
	Receiver-dryer	Replace			1.0			71,92,134	
68	**WARNING AND SIGNALING DEVICES**								
6806	Collision Warning System (CWS)	Inspect	0.1						F
		Align		1.0				72,134	F
		Repair		0.5	1.0			17,129,134	F
91	**CHEMICAL, BIOLOGICAL, AND RADIOLOGICAL (CBR) EQUIPMENT**								
9120	M13 Decontamination Mounting Kit	Replace		0.5				134	
9131	Harness, M22 Chemical Agent Alarm	Replace			0.5			134	G
		Repair		0.3				134	G

Table 2. Tools and Test Equipment Requirements for the M915 Family of Vehicles.

(1) TOOL OR TEST EQUIPMENT REFERENCE CODE	(2) MAINTENANCE LEVEL	(3) NOMENCLATURE	(4) NATIONAL STOCK NUMBER	(5) TOOL NUMBER
1	O	ABS Test Adapter	4910-01-372-3128	446 300 3140
2	F	Adapter Kit, Mechanical Test	4940-01-353-7038	J 28593
3	H	Adapter, Cylinder Compression Tester	4910-01-319-6971	J38768-A
4	H	Adapter, Motor, Hoist	3950-01-319-6973	J35635
5	F	Adapter, Torque Wrench	5120-00-215-8200	0TCEDBX15-16
6	F	Adjuster, Lash, Cam-Idler Gear	5120-01-322-8885	J35596
7	F	Adjusting Tool, Worm Shaft	5120-01-371-7369	J37070
8	F	Barring Tool, Engine	5120-01-322-3498	J36237
9	F	Block		5255
10	H	Bolt, Eye	5306-01-294-3028	993-042
11	H	Bolt, Eye	5306-01-319-1987	J35595
12	H	Bracket, Engine Mount	2510-01-320-8905	J35636
13	F	Bracket, Mounting	5340-01-475-3497	J41445
14	F	Bracket, Vehicular Components	2590-01-475-7886	J35926-A
15	H	Bushing, Sleeve	3120-01-475-1603	J37041
16	F	Checker, Gear Lash	5120-01-353-2520	J 38662
17	F	Clamp, Material Lifting	3940-01-324-4713	J35641
18	H	Compressor, Piston Ring	5120-01-353-8567	J35598
19	H	Compressor, Spring	5120-01-476-9381	J41462
20	H	Compressor, Spring	5120-01-476-9379	J35924
21	F	Cover		5250
22	O	Diagnostic Set, DDEC	6625-01-487-2685	J-42384-HCD
23	F	Driver, Bushing	5120-01-353-2521	PT4365-1
24	H	Driver, Cup		5044
25	H	Extractor		5226
26	H	Extractor		5227
27	H	Gage, Profile	5220-01-388-1460	J-38548-A
28	O	Gage, Profile	5220-01-357-4913	TF-0237
29	F	Gage, Profile	5220-01-440-0686	J39697
30	F	Guide Stud Set	5120-00-555-2353	4080-10
31	F	Guide Stud Set	5120-01-322-3505	J36107
32	H	Handle, Driver	5120-00-677-2259	J8092

Table 2. Tools and Test Equipment Requirements for the M915 Family of Vehicles - Continued.

(1) TOOL OR TEST EQUIPMENT REFERENCE CODE	(2) MAINTENANCE LEVEL	(3) NOMENCLATURE	(4) NATIONAL STOCK NUMBER	(5) TOOL NUMBER
33	O	Handle, Driver	5120-00-977-5578	J7079-2
34	O	Harness, Wiring	6150-01-354-2604	J 35751
35	O	Holder, Clutch	5120-01-439-0305	99-499
36	F	Holding Bar, Pinion	5120-01-455-0436	J 3453-1
37	O	Indicator, Dial	5210-00-402-9619	J7872
38	H	Inserter and Remover	5120-01-476-9378	J37030-3
39	F	Inserter and Remover, Bearing/Bushing	5120-01-338-7182	J25447-B
40	H	Inserter and Remover, Crankshaft Gear	5120-01-322-2360	J35642
41	H	Inserter and Remover, Spring	5120-01-388-5623	J35923-2
42	H	Inserter Set, Dowel	5120-01-322-3500	J36224
43	O	Inserter, ABS Ring	5120-01-479-4986	CM/107119
44	F	Inserter, Bearing and Bushing	5120-01-354-2943	J 37071
45	H	Inserter, Bearing and Bushing	5120-01-475-7610	J39954
46	H	Inserter, Bearing and Bushing	5120-01-475-7608	J37033
47	H	Inserter, Bearing and Bushing	5120-01-476-9377	J37038
48	H	Inserter, Bearing and Bushing	5120-01-477-2749	J37040
49	H	Inserter, Bearing and Bushing	5120-01-475-7609	J39949
50	H	Inserter, Bearing and Bushing	5120-01-476-9380	J37036
51	F	Inserter, Gear	5120-01-322-1132	J35949
52	F	Inserter, Seal	5120-01-322-1129	J35686
53	F	Installation Tool, Seal	5120-01-354-0468	J 37073
54	H	Installer Set, Cup Plug	5120-01-322-2359	J35653
55	H	Installer, Bearing		5023
56	H	Installer, Bearing		5027
57	H	Installer, Bearing		5030
58	F	Installer, Cup Plug	5120-01-333-4744	J36326
59	H	Installer, Handle		5021
60	O	Installer, Seal	5120-00-977-5579	J8550
61	F	Installer, Seal	5120-01-441-1065	J42381
62	F	Installer, Seal	5120-01-440-5119	J42382
63	F	Installer, Seal	5120-01-441-1064	J42383
64	F	Installer, Seal		5248
65	F	Installer, Seal		5270

Table 2. Tools and Test Equipment Requirements for the M915 Family of Vehicles - Continued.

(1) TOOL OR TEST EQUIPMENT REFERENCE CODE	(2) MAINTENANCE LEVEL	(3) NOMENCLATURE	(4) NATIONAL STOCK NUMBER	(5) TOOL NUMBER
66	F	Installer, Seal		5257
67	F	Installer, Seal		5088
68	F	Installer, Seal, Input	5120-01-492-7522	J37032
69	F	Installer, Seal, Output	5120-01-492-7521	J37031
70	H	Installer, Valve Guide	5120-01-322-3501	J33191
71	O	Leak Detector, Refrigerant Gas	4940-01-387-0948	16600
72	O	Level, Digital	5210-01-494-0899	J38460-A
73	F	Lifter, Rocker Arm	5120-01-322-6116	J35996
74	F	Lifting, Bracket, Flywheel	5120-01-116-6049	J-24365
75	O	MSD/ICE	6625-01-493-8968	13580880
76	H	Parts Kit, Valves	4810-01-477-1579	J-33163
77	F	Pilot, Cam Gear	5120-01-322-3508	J35906
78	F	Pin, Shoulder, Headless	5315-01-333-2771	J36235
79	H	Pin, Straight, Threaded	5315-01-475-5229	J43431
80	H	Plate, Indexing Fixture	3460-01-319-5533	J35651
81	F	Plate, Retaining Shaft	3040-01-319-0848	J35652
82	O	Pliers, Hose Clamp		J-38185
83	O	Plier, Slip Joint	5120-00-537-3375	18P
84	F	Pliers, Retaining Ring	5120-01-322-6888	J36347
85	H	Press, Cylinder Liner	3449-01-319-5599	J35597-A
86	F	Protector		5260
87	H	Protector, Crankshaft	2815-01-321-9248	J35994
88	H	Protector, Seal	5120-01-048-2156	J24210
89	F	Puller Kit, Universal	5180-01-048-2153	J24171A
90	H	Puller, Mechanical	5120-01-322-1128	J35791
91	H	Pump, Hydraulic Ram, Hand Driven	4320-01-320-4618	J35951-175
92	F	Reclaimer, Refrigerant	4250-01-396-8928	EEAC304D
93	H	Reconditioning Set, Injector Tube	5120-01-322-3507	J33880
94	F	Remover, Seal	5120-01-322-1131	J35993
95	H	Remover, Valve Guide	5120-01-322-3506	J34696
96	H	Remover, Valve Seat Insert	5120-00-494-1836	5120-00-494-1836
97	H	Remover, Valve Seat Insert	5120-01-322-8883	J23479-460
98	H	Remover, Wheel Bearing Cup	5120-00-784-6482	J3940

Table 2. Tools and Test Equipment Requirements for the M915 Family of Vehicles - Continued.

(1) TOOL OR TEST EQUIPMENT REFERENCE CODE	(2) MAINTENANCE LEVEL	(3) NOMENCLATURE	(4) NATIONAL STOCK NUMBER	(5) TOOL NUMBER
99	H	Replacing Tool, Engine Valve Seat Insert	5120-01-322-1133	J33190
100	H	Replacing Tool, Engine Valve Seat Insert	5120-01-322-2955	J34983
101	F	Retainer, Pinion		5020
102	H	Ring, Retaining	5325-01-475-4635	J37030-1
103	H	Ring, Retaining	5325-01-475-4745	J37030-2
104	H	Scale, Tension	4910-00-779-6832	J8129
105	H	Seal Installer	5120-01-481-2193	8HE542
106	H	Service Kit, Accessory Drive	5120-01-322-3499	J36024-C
107	F	Shield, Turbo Protective	4910-01-127-7959	J26554-A
108	F	Shop Equipment, Automotive, DS Maintenance, Basic	4910-00-754-0705	SC4910-95CLA31
109	F	Shop Equipment, Automotive, DS Maintenance, Set A	4910-00-348-7696	SC4910-95CLA02
110	O	Shop Equipment, Automotive, Unit Maintenance, Common #1	4910-00-754-0654	SC4910-95CLA74
111	O	Shop Equipment, Automotive, Unit Maintenance, Common #2	4910-00-754-0650	SC4910-95CLA72
112	O	Shop Equipment, Automotive, DS Maintenance, Suppl. 1	4910-00-754-0707	SC4910-95CLA63
113	F	Shop Equipment, Automotive, DS Maintenance, Suppl. 2	4910-00-754-0706	SC4910-95CLA62
114	F	Slider, Spring Compression	4910-01-165-6015	TFTLN-2500
115	F	Sling, Beam Type	3940-01-353-8561	J-39520
116	H	Socket, Socket Wrench	5120-01-478-8622	J39534
117	O	Socket, Socket Wrench	5130-01-389-8450	BWD482
118	F	Socket, Socket Wrench	5120-01-322-1123	J36003
119	F	Socket, Socket Wrench	5120-01-355-4791	XE-16
120	F	Spanner		5229
121	F	Spanner Attachment, Socket Wrench	5120-01-353-8490	J 37464
122	O	SPORT/ICE	6625-01-445-0085	13580703
123	F	Spreader, Sling	3940-01-354-9446	J 39517
124	O	Stripper, Wire Hand	5110-01-355-0848	J35615

Table 2. Tools and Test Equipment Requirements for the M915 Family of Vehicles - Continued.

(1) TOOLS OR TEST EQUIPMENT REFERENCE CODE	(2) MAINTENANCE LEVEL	(3) NOMENCLATURE	(4) NATIONAL/NATO STOCK NUMBER	(5) TOOL NUMBER
125	O	Template, Slack Adjuster (See WP 0300 00)		Manufactured
126	F	Test Set	6685-01-438-5088	J38509
127	H	Tester, Cylinder Compression	4910-01-320-4638	J29006-5
128	H	Tester, Cylinder Compression	4910-01-319-6990	J36223-D
129	O	Tester, PRO-Link, Diagnostic Reader		J38500-H
	O	• Adapter, Connector, 6-pin	5935-01-477-7230	J38500-60A
	O	• Adapter, Connector, 9-pin		J-38500-90
	O	• PC Card, ABS	7025-01-482-9014	J-38500-4100C
	O	• PC Card, CTIS/CWS	7025-01-482-8911	J-38500-1300I
	O	• PC Card, Transmission	7025-01-482-8961	J-38500-1800A
	O	• Tester, PRO-Link	4910-01-491-0701	J-38500-1A
	O	•• Adapter, Electrical	5935-01-353-2532	J 34812-1
	O	•• Adapter, PC Card	7025-01-482-8761	J-38500-1500C
	O	•• Cable Assembly, Special	6150-01-353-9708	J 38500-2
	O	•• PC Card, PRO-Link, DDEC III/IV	7025-01-482-8800	J-38500-2300F
130	O	Tester, Kingpin Lock	4910-01-157-3571	TFTLN-5001
131	O	Tester, Kingpin Lock	4910-01-157-3572	TFTLN-1500
132	F	Tester, Power Steering	4910-01-160-3618	J26487-C
133	F	Tool Kit, Automotive Fuel and Electrical System Repair	5180-00-754-0655	SC5180-95-CL-B08
134	O	Tool Kit, General Mechanic's	5180-01-481-8389	DFP389J
135	O	Tool Kit, Internal Combustion Engine	5180-01-358-5231	J 35888-60
136	H	Tool Kit, Metal Worker's	5180-00-596-1510	SC5180-90-CL-N19
137	H	Tool Kit, Transmission	5180-01-476-2361	J-37035
138	F	Tool, Bearing		5256
139	F	Tool, Bearing and Seal		J38779
140	H	Tool, Torque Converter Bolt	5120-01-493-8389	J38564

Table 3. Remarks for the M915 Family of Vehicles.

(1) REMARKS CODE	(2) REMARKS
A	Refer to TM 750-254 (cooling systems) for additional information.
B	Refer to TM 9-6140-200-14 (batteries) for additional information.
C	Refer to TM 9-2610-200-14 (tires) for additional information.
D	Requires SRA for ECU programming/disposition.
E	5A3.
F	5A3,6A3.
G	5A3 New Model, 6A3, 7A2, 7A2 w/MCS.
H	6A3.
I	6A3,7A2, 7A2 w/MCS.
J	7A2, 7A2 w/MCS.
K	5A3 Old Model.
L	7A2 w/MCS

END OF WORK PACKAGE

EXPENDABLE AND DURABLE ITEMS LIST 0305 00

SCOPE

This work package lists expendable and durable items you will need to maintain the M915 Family of Vehicles. This listing is for information only and is not authority to requisition the listed items. These items are authorized to you by CTA 50-970, *Expendable/Durable Items (Except Medical, Class V Repair Parts, and Heraldic Items)*, or CTA 8-100, *Army Medical Department Expendable/Durable Items*.

EXPLANATION OF COLUMNS

1. **Column (1) - Item Number.** This number is assigned to the entry in the list and is referenced in the narrative instructions to identify the item [e.g., Use antifreeze (Item 6, WP 0305 00)].
2. **Column (2) - Level.** This column identifies the lowest level of maintenance that requires the listed item.

   C - Operator/Crew

   O - Unit Maintenance
3. **Column (3) - National Stock Number (NSN).** This is the NSN assigned to the item which you can use to requisition it.
4. **Column (4) - Item Name, Description, Commercial and Government Entity Code (CAGEC), and Part Number (P/N).** This provides the other information you need to identify the item.
5. **Column (5) - Unit of Measure (U/M).** This code shows the physical measurement or count of an item, such as gallon, dozen, gross, etc.

Table 1. Expendable and Durable Items List.

(1) ITEM NUMBER	(2) LEVEL	(3) NATIONAL STOCK NUMBER	(4) ITEM NAME, DESCRIPTION, CAGEC, AND PART NUMBER	(5) U/M
1	O		ADHESIVE (19203) 8832526	
1		8040-00-877-9872	3 Ounce Tube	OZ
2	O		ADHESIVE: General Purpose, Type II (18876) 9995460	
		8040-00-664-4318	1 Pint Can	PT
3	O	8040-01-250-3969	ADHESIVE: Loctite (05972) 242	OZ
4	O	8030-01-475-2445	ADHESIVE: Loctite (05972) 648	OZ
5	O	8040-00-142-9823	ADHESIVE: Silicone Rubber (81349) MIL-A-46106	KIT
6	C		ANTIFREEZE: Permanent, Ethylene Glycol, Inhibited (81349) MILA46153	
		6850-00-181-7929	1 Gallon Bottle	GAL
		6850-00-181-7933	5 Gallon Can	GAL
		6850-00-181-7940	55 Gallon Drum	GAL
7	C		ANTIFREEZE: Permanent, Type: Arctic Grade (81349) MIL-A-11755	
		6850-01-441-3248	55 Gallon Drum	GAL
8	O		CAULK: Strip (75037) 08578	
			60 Strips, 1 Foot Long Each, Black	EA
9	O		COMPOUND: Antiseize, High Temperature (73165) 51008	
		8030-00-597-5367	25 pound can	LB
10	O		COMPOUND: Caulking (0FTT5) 0854-000	
		8030-01-241-9727	90 Foot Roll	FT
11	C		COMPOUND: Cleaning, Windshield (0FTTS) 0854-000	
		6850-00-926-2275	16 Ounce Can	OZ
12	O		COMPOUND: Sealing: Dissimilar Metal Protection (71961) 6099	
		8030-01-392-3276	1 Gallon Can	GAL

Table 1. Expendable and Durable Items List - Continued.

(1) ITEM NUMBER	(2) LEVEL	(3) NATIONAL STOCK NUMBER	(4) ITEM NAME, DESCRIPTION, CAGEC, AND PART NUMBER	(5) U/M
13	O		COMPOUND: Sealing, Pipe (05972) 07931	
		8030-00-081-2286	50 CC Bottle	CC
		8030-00-081-2327	Box of 10 Bottles, 10 CC Each Bottle	CC
14	C		DETERGENT: General Purpose, Liquid (81348) P-D-220	
		7930-00-282-9699	1 Gallon Can	GAL
15	O		FLUX: Soldering (58536) A-A-51145 TY1 FORM A	
		3439-00-255-9935	1 Pound Can	LB
16	C		FUEL: Diesel, DF-1 Grade, Winter (81346) ASTM D 975	
		9140-00-286-5286	Bulk	GAL
		9140-00-286-5287	5 Gallon Can	GAL
		9140-00-286-5288	55 Gallon Drum, 16 Gage	GAL
		9140-00-286-5289	55 Gallon Drum, 18 Gage	GAL
17	C		FUEL: Diesel, DF-2 Grade (81346) ASTM D 975	
		9140-00-286-5294	Bulk	GAL
		9140-00-286-5295	5 Gallon Can	GAL
		9140-00-286-5296	55 Gallon Drum, 16 Gage	GAL
		9140-00-286-5297	55 Gallon Drum, 18 Gage	GAL
18	C		GREASE: Automotive and Artillery, GAA (71984) MOLYKOTE 55M 5.3 OZ	
		9150-01-197-7693	14 Ounce Cartridge (M-10924-B)	OZ
		9150-01-197-7688	1-1/4 Ounce Tube (M-10924-A)	OZ
		9150-01-197-7690	2-1/4 Pound Can (M-10924-C)	LB
		9150-01-197-7692	35 Pound Can (M-10924-E)	LB
		9150-01-197-7691	120 Pound Drum (M10924-F)	LB
19	O		GREASE: Silicone (71984) MOLYKOTE 55M 5.3 02	OZ
		9150-01-066-1823	Box of 12 tubes, 5.3 ounces each	OZ
20	O		GREASE: Molybdenum Disulfide (39428) 1062K97	
		9150-01-326-5424	14 Ounce Cartridge	OZ
21	C		OIL: Lubricating, OEA, Arctic (81349) MIL-PRF-46167	
		9150-00-402-4478	1 Quart Can	QT
		9150-00-402-2372	5 Gallon Can	GAL
		9150-00-491-7197	55 Gallon Drum	GAL

Table 1. Expendable and Durable Items List - Continued.

(1) ITEM NUMBER	(2) LEVEL	(3) NATIONAL STOCK NUMBER	(4) ITEM NAME, DESCRIPTION, CAGEC, AND PART NUMBER	(5) U/M
22	C		OIL: Lubricating, OE/HDO 10 (81349) MIL-PRF-2104	
		9150-00-189-6727	1 Quart Can	QT
		9150-00-186-6668	5 Gallon Can	GAL
		9150-00-191-2772	55 Gallon Drum, 18 Gage (MILL2104)	GAL
23	C		OIL: Lubricating, OE/HDO 15/40 (81349) MIL-PRF-2104	
		9150-01-152-4117	1 Quart Can	QT
		9150-01-152-4118	5 Gallon Can	GAL
		9150-01-152-4119	55 Gallon Drum	GAL
24	C		OIL: Lubricating, OE/HDO 30 (81349) MIL-PRF-2104	
		9150-00-186-6681	1 Quart Can	QT
		9150-00-188-9858	5 Gallon Can	GAL
		9150-00-189-6729	55 Gallon Drum	GAL
25	C		OIL: Lubricating, OE/HDO 40 (81349) MILL2104	
		9150-00-189-6730	1 Quart Can	QT
		9150-00-188-9862	55 Gallon Drum	GAL
26	C		OIL: Lubricating, GO 75 (81349) MIL-PRF-2105	
		9150-01-035-5390	1 Quart Can	QT
		9150-01-035-5391	5 Gallon Can	GAL
27	C		OIL: Lubricating, GO 80/90 (81349) MIL-PRF-2105	
		9150-01-035-5392	1 Quart Can	QT
		9150-01-313-2191	1 Gallon Can	GAL
		9150-01-035-5395	5 Gallon Can	GAL
		9150-01-035-5394	55 Gallon Drum	GAL
28	C		OIL: Lubricating, GO 85/140 (81349) MIL-PRF-2105	
		9150-01-048-4591	1 Quart Can	QT
		9150-01-035-5395	5 Gallon Can	GAL
		9150-01-035-5396	55 Gallon Drum	GAL
29	C		OIL: Lubricating, Refrigerant Compressor, Synthetic Ester (59595) CAPELLA HFG-68NA	
		9150-01-410-8972	1 Quart Can	QT
30	O		PAINT: Heat Resisting, White (87187) 1505	
		8010-01-141-3949	13 Ounce Can, Pressurized Spray	OZ

Table 1. Expendable and Durable Items List - Continued.

(1) ITEM NUMBER	(2) LEVEL	(3) NATIONAL STOCK NUMBER	(4) ITEM NAME, DESCRIPTION, CAGEC, AND PART NUMBER	(5) U/M
31	C		RAG: Wiping (64067) 7920-00-205-1711	
		7920-00-205-1711	50 Pound Bale	LB
32	O		SOLDER: Lead-tin Alloy, Rosin Core (81346) SN60WRP2 0.032 1 LB	
		3439-00-555-4629	1 Pound Spool	LB
33	O		STRAP: Tiedown, Electrical Components Box of 100	EA
		5975-00-984-6582	(96906) MS3367-1-0 6 Inch Length, 1.75 Inch Maximum Bundle, Black	
		5975-00-935-5946	(96906) MS3367-2-1 13.35 Inch Length, 4 Inch Maximum Bundle, Brown	
		5975-00-903-2284	(81349) M33671-4-0 4 Inch Length, Black	
34	O		TAG: Marker (64067) 9905-00-537-8954	
		9905-00-537-8954	Bundle of 50	EA
35	O		TAPE: Double-sided (7X678) 4970	YD
36	O		TAPE: Duct, 2 Inches Wide (39428) 1791K70	
		5640-00-103-2254	60 Yard Roll	YD
37	O		TAPE: Insulation, Electrical (75037) 33	
		5970-00-989-1485	260 Inch Roll	IN
38	O		WIRE: Nonelectrical (81346) ASTM A641	
		9505-00-596-0191	5 Pound Coil	LB

END OF WORK PACKAGE

TOOL IDENTIFICATION LIST 0306 00

SCOPE

This work package lists all common tools and supplements and special tools/fixtures needed to maintain the M915 Family of Vehicles.

EXPLANATION OF COLUMNS IN THE TOOL IDENTIFICATION LIST

1. **Column (1) - Item Number (No.).** This number is assigned to the entry in the list and is referenced in the initial setup to identify the item (e.g., Tool kit, general mechanic's, Item 50, WP 0306 00).
2. **Column (2) - Item Name.** This column lists the item by noun nomenclature and other descriptive features (e.g., PC Card, Transmission).
3. **Column (3) - National Stock Number.** This is the National Stock Number (NSN) assigned to the item; use it to requisition the item.
4. **Column (4) - Part Number/CAGEC.** Indicates the primary number used by the manufacturer (individual, company, firm, corporation or Government activity) which controls the design and characteristics of the item by means of its engineering drawings, specifications, standards, and inspection requirements to identify an item or range of items. The manufacturer's Commercial and Government Entity Code (CAGEC) is also included.
5. **Column (5) - Reference.** This column identifies the authorizing supply catalog or RPSTL for items listed in this work package.

TOOL IDENTIFICATION LIST

Table 1. Tool Identification List.

(1) ITEM NO.	(2) ITEM NAME	(3) NATIONAL STOCK NUMBER	(4) PART NUMBER/ CAGEC	(5) REFERENCE
1	Adapter, Electrical	5935-01-353-2532	J 34812-1 (33287)	TM 9-2320-302-24P
2	Adapter, Test, ABS	4910-01-372-3128	446 300 3140 (78500)	TM 9-2320-302-24P
3	Bar, Wrecking: 30 in length	5120-00-293-0665	55-130 (57068)	SC 4910-95-A72
4	Cable Assembly, Special	6150-01-353-9708	J 38500-2 (33287)	TM 9-2320-302-24P
5	Compressor Unit, Reciprocating	4310-00-752-9633	MIL-C-52980 (81349)	SC 4910-95-A74
6	Cutter, Tube	4710-01-451-8753	PTC001 (93061)	GSA Catalog
7	DDEC III/IV PC Card, PRO-LINK	7025-01-482-8800	J-38500-2300F (33287)	TM 9-2320-302-24P
8	Diagnostic Set, DDEC	6625-01-487-2685	J42384-HCD (72582)	TM 9-2320-302-24P
9	Drill, Electric, Portable: 3/8 in size	5130-00-935-7354	PD5130-00-935-7354 (80244)	SC 4910-95-A74
10	Drill Set, Twist	5133-00-293-0983	800434 (19203)	SC 4910-95-A74
11	Driver, Cup		5044	TM 9-2320-302-24P
12	Gage, Profile	5220-01-357-4913	TF-0237 (74410)	TM 9-2320-302-24P
13	Gloves, Chemical and Oil Protective: rubber	8415-00-641-4601	ZZ-G-381 (81348)	SC 4910-95-A74
14	Goggles, Industrial	4240-00-052-3776	A-A-1110 (58536)	SC 4910-95-A74
15	Handle, Driver	5120-00-977-5578	J7079-2 (33287)	TM 9-2320-302-24P
16	Harness, Wiring	6150-01-354-2604	J 35751 (33287)	TM 9-2320-302-24P
17	Heat Gun	4940-01-037-7268	6966C (78976)	GSA Catalog
18	Holder, Clutch	5120-01-439-0305	99-499 (07BE6)	TM 9-2320-302-24P
19	Indicator, Dial	5210-00-402-9619	J7872 (33287)	TM 9-2320-302-24P
20	Inserter, ABS Ring	5120-01-479-4986	107119 (4N501)	TM 9-2320-302-24P
21	Installer, Seal	5120-00-977-5579	J8550 (33287)	TM 9-2320-302-24P
22	Installer, Seal		5248	TM 9-2320-302-24P
23	Installer, Seal		5270	TM 9-2320-302-24P
24	Jack, Hydraulic, Hand: 12 ton capacity	5120-00-224-7330	67224 (07505)	SC 4910-95-A74
25	Leak Detector, Refrigerant Gas	4940-01-387-0948	16600 (07295)	TM 9-2320-302-24P
26	Level, Digital	5210-01-494-0899	J 38460-A (33287)	TM 9-2320-302-24P
27	MSD/ICE	6625-01-493-8968	13580880 (18876)	TM 9-2320-302-24P
28	Multimeter, Digital	6625-01-139-2512	T00377 (55026)	SC 4910-95-A72
29	Pan, Drain: 4 gallon capacity	4910-00-387-9592	17942 (36540)	SC 4910-95-A74
30	PC Card, ABS	7025-01-482-9014	J-38500-4100C (45225)	TM 9-2320-302-24P
31	PC Card, CTIS/CWS	7025-01-482-8911	J-38500-1300I (45225)	TM 9-2320-302-24P
32	PC Card, Transmission	7025-01-482-8961	J-38500-1800A (45225)	TM 9-2320-302-24P

Table 1. Tool Identification List - Continued.

(1) ITEM NO.	(2) ITEM NAME	(3) NATIONAL STOCK NUMBER	(4) PART NUMBER/ CAGEC	(5) REFERENCE
33	Pliers, Hose Clamp		J-38185	TM 9-2320-302-24P
34	Pliers, Retaining Ring: internal, 0.120 in diameter, 3.15-6.5 in ring diameter	5120-00-293-0186	7082060 (19207)	SC 4910-95-A72
35	Pliers, Slip Joint	5120-00-537-3375	18P (45586)	TM 9-2320-302-24P
36	Protector		5260	TM 9-2320-302-24P
37	Puller Kit, Universal	5180-00-313-9496	1178 (45225)	SC 4910-95-A72
38	Riveter, Blind, Hand: 3/32 in, 1/8 in, 5/32 in, and 3/16 in diameters	5120-00-017-2849	98 (54402)	SC 4910-95-A74
39	Sling, Nylon	2835-01-078-2081	4-8FTx2IN (91796)	GSA Catalog
40	Socket, Socket Wrench	5130-01-389-8450	BWD482 (55719)	TM 9-2320-302-24P
41	Soldering Gun	3439-00-618-6623	D550-3 (97049)	SC 4910-95-A74
42	Spanner		5229	TM 9-2320-302-24P
43	SPORT/ICE	6625-01-445-0085	13580703 (18876)	TM 9-2320-302-24P
44	Stripper, Wire, Hand	5110-01-355-0848	J35615 (33287)	TM 9-2320-302-24P
45	Tape, Measuring: 50 feet long	5210-00-554-7085	403 (37163)	SC 4910-95-A72
46	Tester, PRO-LINK Diagnostic Reader	4910-01-343-3508	J 38500-A (33287)	TM 9-2320-302-24P
47	Tester, Kingpin Lock	4910-01-157-3571	TFTLN-5001 (74410)	TM 9-2320-302-24P
48	Tester, Kingpin Lock	4910-01-061-5594	TFTLN-1500 (74410)	TM 9-2320-302-24P
49	Tool Kit, Electrical Connector Repair	5180-00-876-9336	7550526 (19204)	SC 4910-95-A72
50	Tool Kit, General Mechanic's: Automotive	5180-01-481-8389	DFP389J (59678)	SC 5180-95-N26
51	Tool Kit, Internal Combustion	5180-01-358-5231	J 35888-60 (33287)	TM 9-2320-302-24P
52	Trestle, Hoist, Portable: 7 ton capacity	3950-00-251-8013	306 (79805)	SC 4910-95-A72
53	Vise, Machinist's	5120-00-293-1439	504M2 (79416)	SC 4910-95-A74
54	Wrench, Strap	5120-00-020-2947	2432097 (10001)	SC 4910-95-A74
55	Wrench, Torque: 3/8 in drive, 0-200 lb-in capacity	5120-00-853-4538	3305725-1 (99251)	SC 4910-95-A72
56	Wrench, Torque: 3/8 in drive, 0-300 lb-in capacity	5120-00-776-1841	2163993 (10001)	SC 4910-95-A74
57	Wrench, Torque: 3/8 in drive, 15-75 lb-ft capacity	5120-01-355-1734	QC2FR75 (55719)	SC 4910-95-A74
58	Wrench, Torque: 50-250 lb-ft capacity	5120-01-042-0982	STW-3RCF (8Z799)	SC 4910-95-A74
59	Wrench, Torque: 3/4 in drive, 100-600 lb-ft capacity	5120-01-113-9564	7379 (45225)	SC 4910-95-A72
60	Wrench Set, Socket: 3/4 in drive	5120-00-204-1999	B107.1 (05047)	SC 4910-95-A72
61	Wrench Set, Socket Attachment: screwdriver, torx, 1/4 and 3/8 in drive	5120-01-178-6342	J-29843 (33287)	GSA Catalog

END OF WORK PACKAGE

INDEX

Subject *Work Package/Page*

Numerics

A

INDEX - Continued

Subject *Work Package/Page*

A - Continued

B

INDEX - Continued

Subject *Work Package/Page*

B - Continued

INDEX - Continued

Subject *Work Package/Page*

C

INDEX - Continued

Subject *Work Package/Page*

C - Continued

D

E

INDEX - Continued

Subject *Work Package/Page*

E - Continued

F

INDEX - Continued

Subject *Work Package/Page*

F - Continued

G

H

INDEX - Continued

Subject *Work Package/Page*

H - Continued

I

L

INDEX - Continued

Subject *Work Package/Page*

L - Continued

M

N

O

INDEX - Continued

Subject *Work Package/Page*

O - Continued

P

Q

R

INDEX - Continued

Subject *Work Package/Page*

R - Continued

S

INDEX - Continued

Subject *Work Package/Page*

S - Continued

INDEX - Continued

Subject *Work Package/Page*

S - Continued

T

INDEX - Continued

Subject *Work Package/Page*

T - Continued

INDEX - Continued

Subject *Work Package/Page*

U

V

W

DDEC III/IV WIRING DIAGRAM

DDC RESPONSIBILITY

CONNECTOR
COLOR BLACK

WIRE NO.	CAVITY	LABEL
622	A	JAKE BRAKE - LOW
621	B	JAKE BRAKE - MED

CONNECTOR
COLOR GREY

WIRE NO.	CAVITY	LABEL
611	L	INJECTOR 1
613	K	INJECTOR 3
---	J	CAVITY PLUG
615	H	INJECTOR 2
619	G	INJECTOR COMMON

CONNECTOR
COLOR BLACK

WIRE NO.	CAVITY	LABEL
612	A	INJECTOR 5
614	B	INJECTOR 6
---	C	CAVITY PLUG
616	D	INJECTOR 4
620	E	INJECTOR COMMON

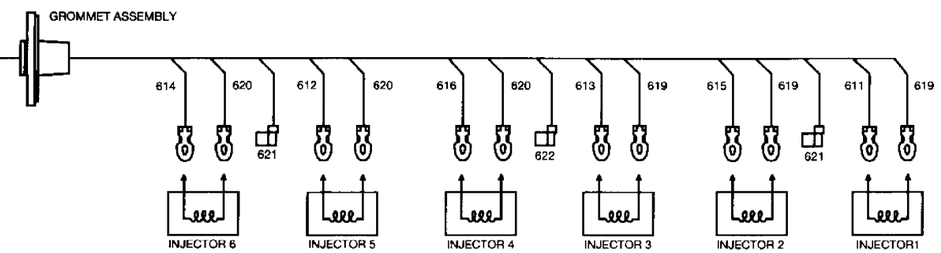

INJECTOR HARNESS SCHEMATIC
(SERIES 60 WITH JAKE BRAKES SHOWN)

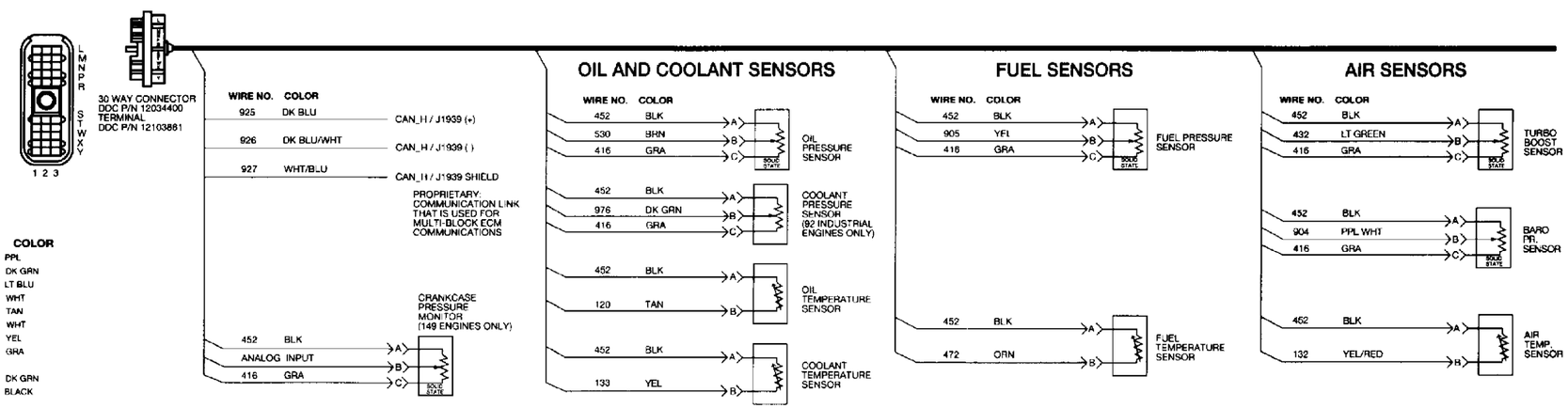

LABEL	WIRE NO.	CAVITY	COLOR
TRS (-)	109	T-1	PPL
TRS (+)	110	T-2	DK GRN
SRS (+)	111	S-2	LT BLU
SRS (-)	112	S-1	WHT
OIL TEMPERATURE	120	R-2	TAN
AIR TEMPERATURE	132	N-2	WHT
COOLANT TEMP	133	P-3	YEL
SENSOR SUPPLY (5VDC)	416	W-1	GRA
TURBO BOOST	432	P-1	DK GRN
SENSOR RETURN (ENGINE)	452	Y-2	BLACK
FUEL TEMP	472	R-3	ORN
OIL PRESSURE	530	P-2	BRN
ENGINE BRAKE MED	561	S-3	RED
ENGINE BRAKE LO	562	T-3	ORN
DIGITAL OUTPUT W-3	563	W-3	YEL
DIGITAL OUTPUT X-3	564	X-3	TAN/BLK
DIGITAL OUTPUT Y-3	565	Y-3	RED
TIMED INPUT	573	X-1	BRN
BARO PRESSURE	904	L-1	PPL/WHT
FUEL PRESSURE	905	M-1	YEL
ANALOG INPUT #3	906	N-1	ORN
ANALOG INPUT #6	907	R-1	DK GRN
PWM OUT #2	909	Y-1	LT GRN/YEL
PWM OUT #3	910	W-2	ORN
PWM OUT #4	911	X-2	PNK
J1939 (+)	925	L-3	DK BLU
J1939 (-)	926	M-3	DK BLU/WHT
J1939 SHIELD	927	N-3	WHT/BLU
ANALOG INPUT #5	958	M-2	BLU
ANALOG INPUT #4	976	L-2	DK GRN

20SE79 9803 As technical advancements continue, specifications will change.

OEM RESPONSIBILITY

VEHICLE INTERFACE HARNESS CONNECTOR

LABEL	WIRE NO.	CAVITY	COLOR
COOLANT LEVEL	115	H-3	ORN
LIMITING SPEED GOVERNOR	417	D-2	DK BLUE
CHECK ENGINE LIGHT	419	B-1	PPL/WHT
IGNITION	439	B-3	PNK
DIGITAL INPUT E-1	451	E-1	LT GRN
DIGITAL OUTPUT F-3	499	F-3	LT BLU
TACHOMETER DRIVE	505	K-1	GRA
STOP ENGINE LIGHT	509	B-2	PPL
VARIABLE SPEED GOVERNOR	510	D-1	BRN
DIGITAL INPUT H-1	523	H-1	GRA/RED
DIGITAL INPUT H-2	524	H-2	GRA
DIGITAL INPUT G-1	528	G-1	BRN/RED
DIGITAL INPUT J-2	531	J-2	ORN
DIGITAL INPUT J-1	541	J-1	YEL/RED
DIGITAL INPUT F-1	542	F-1	YEL
DIGITAL INPUT G-2	543	G-2	ORN/BLK
DIGITAL INPUT F-2	544	F-2	BRN/WHT
DIGITAL INPUT G-3	545	G-3	LT BLUE/YEL
DIGITAL OUTPUT A-2	555	A-2	TAN
VEHICLE SPEED (+)	556	E-2	LT BLUE/BLK
VEHICLE SPEED (–)	557	E-3	LT BLUE/ORN
DIGITAL INPUT K-2	583	K-2	LT BLUE/BLK
ANALOG INPUT #7	749	D-3	YEL
DATA LINK (+)	900	C-2	DK GREEN/YEL
DATA LINK (–)	901	C-1	DK GREEN
PWM #1 OUTPUT	908	J-3	WHT
SENSOR SUPPLY (5VDC)	916	A-3	RED/BLK
SENSOR RETURN	952	C-3	BLK
DIGITAL INPUT K-3	979	K-3	WHT
DIGITAL OUTPUT A-1	988	A-1	GRA

IGNITION CONNECTOR

+12V FROM BATTERY	440	A	ORN
BATTERY GROUND	953	B	BLK/WHT

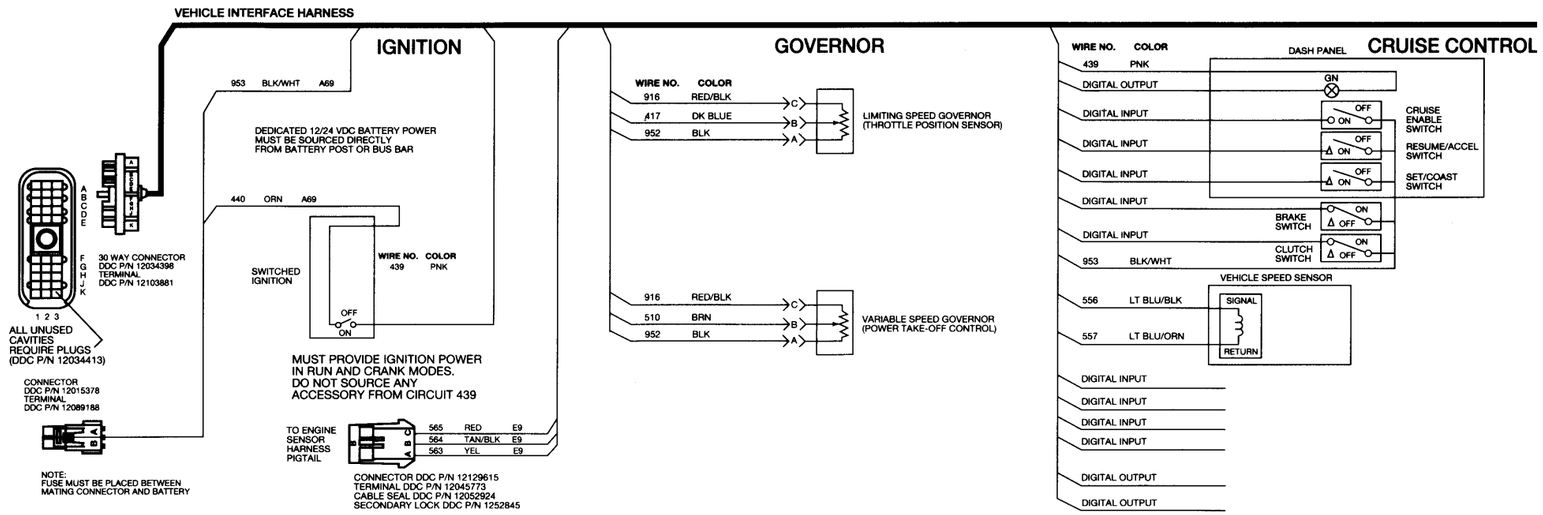

VEHICLE INTERFACE HARNESS

COOLANT LEVEL SENSOR

WIRE NO.	CAVITY	COLOR
115	A	ORN
953	B	BLK/WHT

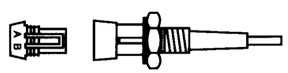

280 SERIES METRI-PACK CONNECTOR (INCLUDED IN DDC KIT 15300027)

COOLANT LEVEL PROBE 3/8" NPT: DDC P/N 23512881 1/4" NPT: DDC P/N 23512880

INSTRUMENT PANEL

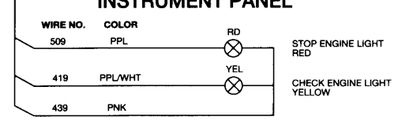

POWER HARNESS- SINGLE ECM SINGLE FUSE

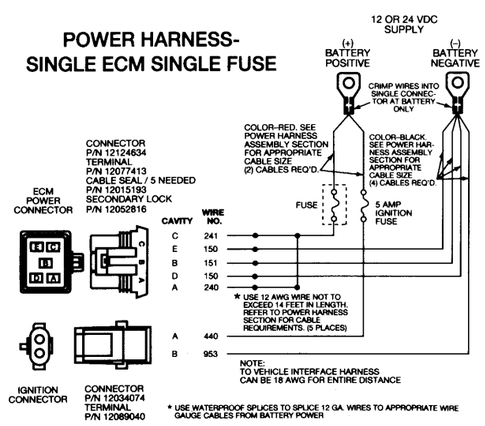

DIAGNOSTIC CONNECTOR

WIRE NO.	CAVITY	COLOR	LABEL
900	A	DK GRN/YEL	DATA LINK (+)
901	B	DK GRN	DATA LINK (–)
—	C	RED	+ 12/24 VDC
—	D	CAVITY PLUG P/N 23507136	
953	E	BLK/WHT	BATTERY GROUND
—	F	CAVITY PLUG P/N 23507136	

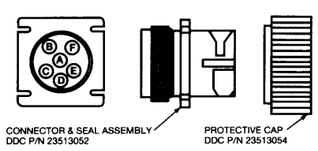

WIRE NO.	COLOR
DIGITAL INPUT	
953	BLK/WHT

N.O. — DIAGNOSTIC REQUEST AND STOP ENGINE OVERRIDE SWITCH

NOTE: SEE DOCUMENTATION ON OPERATION

MISCELLANEOUS

WIRE NO.	COLOR	
908	WHT	PWM #1
505	GRA	TACHOMETER DRIVE
563	YEL	DIGITAL OUTPUT W-3
564	TAN/BLK	DIGITAL OUTPUT X-3
565	RED	DIGITAL OUTPUT Y-3

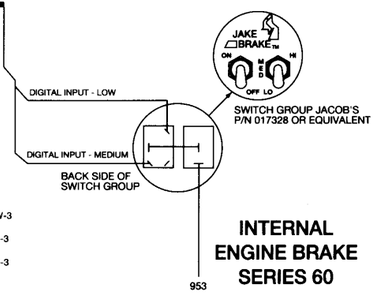

INTERNAL ENGINE BRAKE SERIES 60

COMMUNICATIONS HARNESS FOR DDEC III/IV

CAVITY	WIRE NO.	COLOR	FUNCTION
F	925	DK BLU	CAN_H / J1939 (+) CONTROL DATA LINK
E	926	DK BLU/WHT	CAN_L / J1939 (–) CONTROL DATA LINK
D	927	WHT/BLU	CAN_H / J1939 SHIELD
C	439	PNK	IGNITION
B	801	TAN	J1922 (–) CONTROL DATA LINK
A	800	TAN/WHT	J1922 (+) CONTROL DATA LINK

CONNECTS DIRECTLY INTO ECM'S COMMUNICATION CONNECTOR

CONNECTOR P/N 12066317 COLOR BLACK TERMINAL P/N 12103881 PLUG P/N 12034413

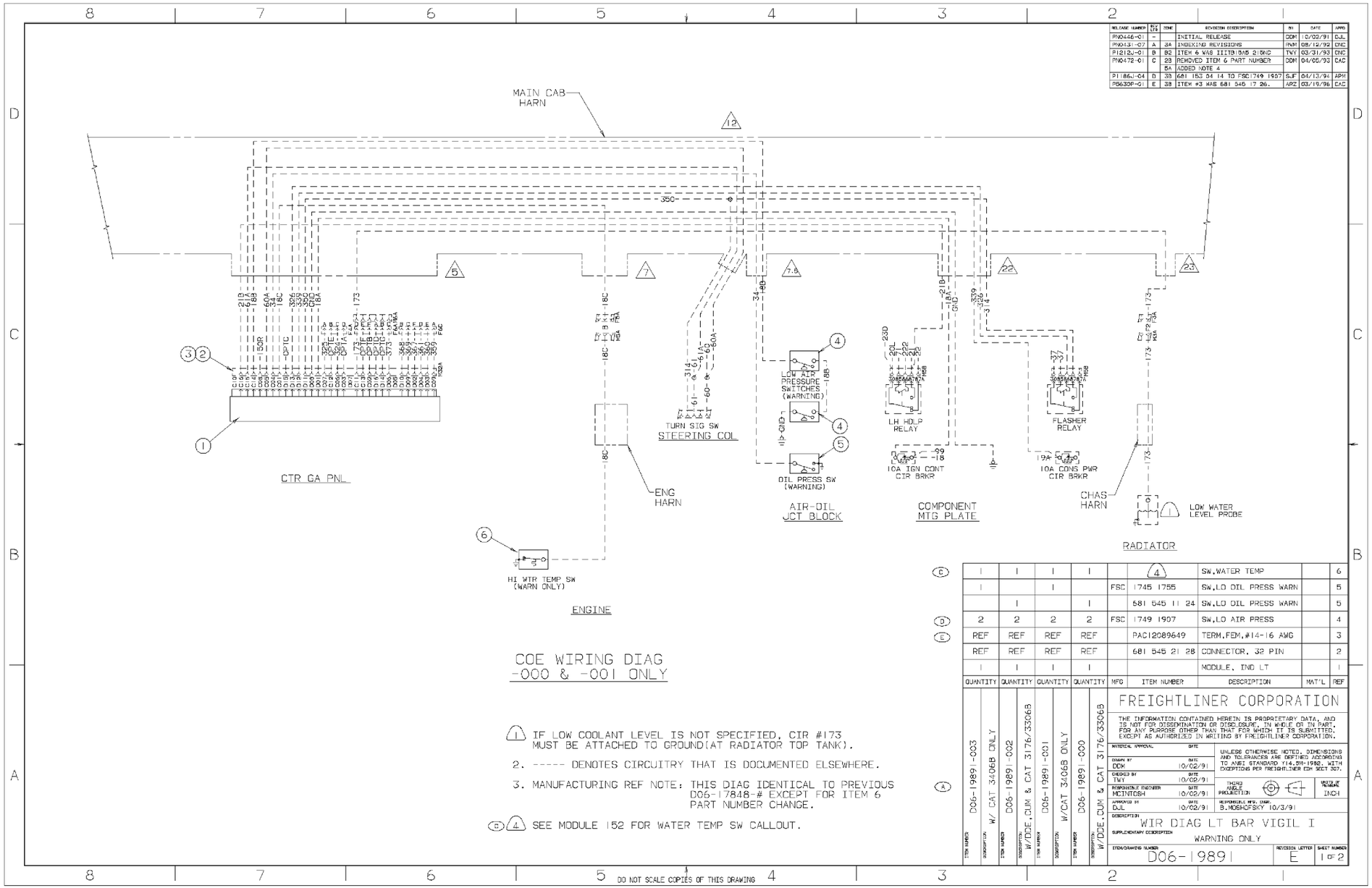

	QUANTITY	QUANTITY	QUANTITY	QUANTITY	MFG	ITEM NUMBER	DESCRIPTION	MAT'L	REF
C	1	1	1	1		4	SW,WATER TEMP		6
	1		1		FSC	1745 1755	SW,LO OIL PRESS WARN		5
		1		1		681 545 11 24	SW,LO OIL PRESS WARN		5
D	2	2	2	2	FSC	1749 1907	SW,LO AIR PRESS		4
E	REF	REF	REF	REF		PAC12089649	TERM,FEM,#14-16 AWG		3
	REF	REF	REF	REF		681 545 21 28	CONNECTOR, 32 PIN		2
	1	1	1	1			MODULE, IND LT		1
A	D06-19891-003 W/ CAT 3406B ONLY	D06-19891-002 W/DDE,CUM & CAT 3176/3306B	D06-19891-001 W/CAT 3406B ONLY	D06-19891-000 W/DDE,CUM & CAT 3176/3306B					

RELEASE NUMBER	REV LTR	ZONE	REVISION DESCRIPTION	BY	DATE	APPD
PN0446-01	-		INITIAL RELEASE	DOM	10/02/91	DJL
PN0431-07	A	5B	ADDED ENHANCED COE TO VIEW I.D.	PWM	08/12/92	DNC
P1212J-01	B		SEE SHEET 1 OF 2	TWY	03/31/93	DNC
PN0479-01	C		SEE SHEET 1 OF 2	DOM	02/05/93	CAC
P1186J-04	D		SEE SHEET 1 OF 2	SJF	04/13/94	APM
P06360P-01	E		SEE SHEET 1 OF 2	APZ	03/19/96	CAC

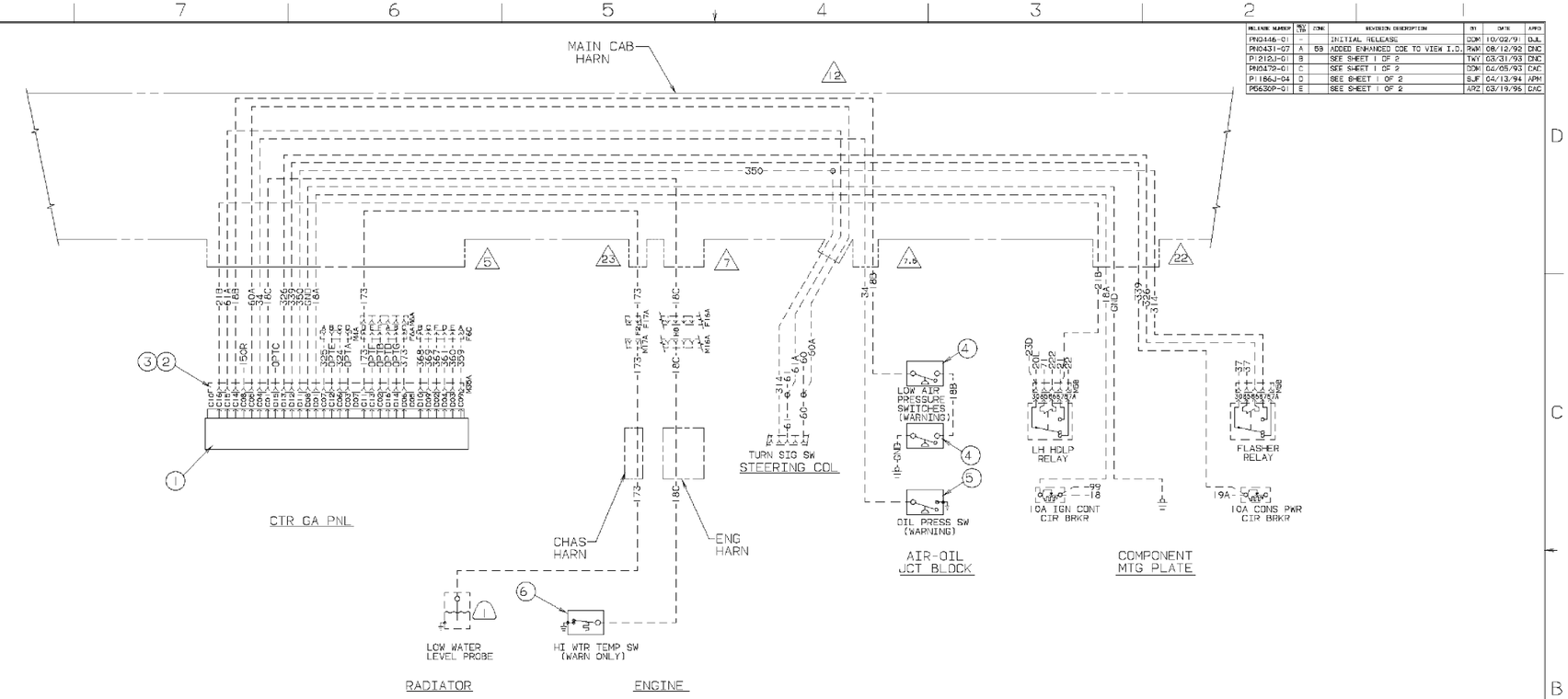

ENHANCED COE AND CNVTL WIRING DIAG -002 & -003 ONLY

1. IF LOW COOLANT LEVEL IS NOT SPECIFIED, CIR #173 MUST BE ATTACHED TO GROUND(AT RADIATOR TOP TANK).

2. ----- DENOTES CIRCUITRY THAT IS DOCUMENTED ELSEWHERE.

FREIGHTLINER CORPORATION

MATERIAL APPROVAL	DATE	UNLESS OTHERWISE NOTED, DIMENSIONS AND TOLERANCES ARE DEFINED ACCORDING TO ANSI STANDARD Y14.5M-1982, WITH EXCEPTIONS PER FREIGHTLINER CO= SECT 307.	
DRAWN BY DOM	DATE 10/02/91		
CHECKED BY TWY	DATE 10/02/91	THIRD ANGLE PROJECTION	UNITS OF MEASURE INCH
RESPONSIBLE ENGINEER MCINTOSH	DATE 10/02/91	RESPONSIBLE MFG. ENGR. B.MOSHOFSKY 10/3/91	
APPROVED BY DJL	DATE 10/02/91		

DESCRIPTION: WIR DIAG LT BAR VIGIL I

SUPPLEMENTARY DESCRIPTION: WARNING ONLY

STOCK/DRAWING NUMBER	REVISION LETTER	SHEET NUMBER
D06-19891	E	2 OF 2

DO NOT SCALE COPIES OF THIS DRAWING

RELEASE NUMBER	REV LTR	ZONE	REVISION DESCRIPTION	BY	DATE	APPD
PN0604-03	-	-	INITIAL RELEASE	DHW	05/26/94	DJP

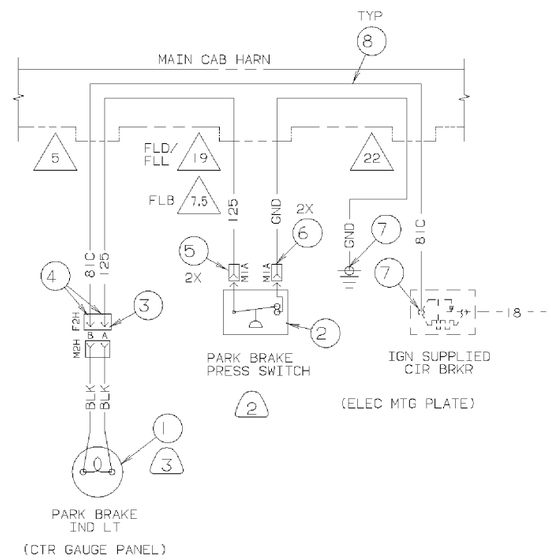

1 UNLESS OTHERWISE SPECIFIED, WIRING MUST CONFORM TO FREIGHTLINER STANDARD 49-00052.

2 ITEM #2 NORMALLY CLOSED PRESSURE SWITCH IS TO BE LOCATED IN THE TRACTOR DELIVERY LINE. THE SWITCH WILL CLOSE, ACTIVATING THE WARNING LIGHT WHEN THE TRACTOR PARK BRAKES ARE SET & THE IGNITION IS IN THE "RUN" POSITION. SEE BOM FOR SWITCH INSTL.

3 ITEM #1 WARNING LIGHT IS TO BE INSTALLED IN THE DASH PANEL PER THE SWITCH & GAUGE REPORT.

ITEM NUMBER D06-22310-000

DESCRIPTION: PWR ACTIVATED IND LT

FREIGHTLINER CORPORATION

MATERIAL APPROVAL	DATE	UNLESS OTHERWISE NOTED, DIMENSIONS AND TOLERANCES ARE DEFINED ACCORDING TO ANSI STANDARD Y14.5M-1982, WITH EXCEPTIONS PER FREIGHTLINER EOM SECT 307.
DRAWN BY DHW	DATE 05/24/94	
CHECKED BY DJP	DATE 05/26/94	THIRD ANGLE PROJECTION — UNITS OF MEASURE INCH
RESPONSIBLE ENGINEER DHW	DATE 05/24/94	
APPROVED BY KVM	DATE 05/26/94	RESPONSIBLE MFG. ENGR. K.KERBS 06/08/94

DESCRIPTION
DIAG-WRG, IND LT, PARK BRAKE

SUPPLEMENTARY DESCRIPTION
882B1 DASH USF GRAKON PARK BRK IND LT

ITEM/DRAWING NUMBER	REVISION LETTER	SHEET NUMBER
D06-22310	—	1 OF 1

DO NOT SCALE COPIES OF THIS DRAWING

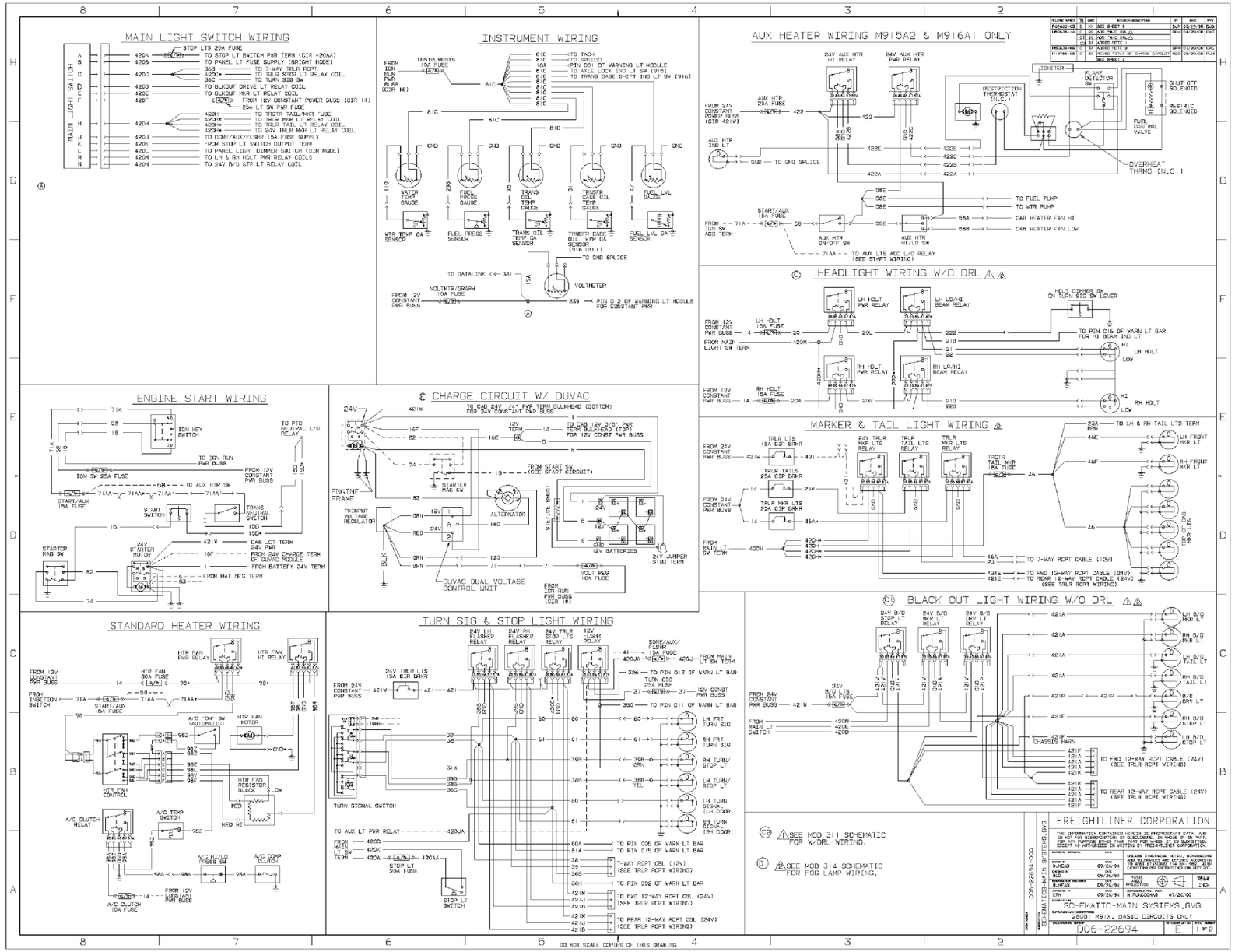
MAIN LIGHT SWITCH WIRING
INSTRUMENT WIRING
AUX HEATER WIRING M915A2 & M916A1 ONLY
HEADLIGHT WIRING W/O DRL
ENGINE START WIRING
CHARGE CIRCUIT W/ DUVAC
MARKER & TAIL LIGHT WIRING
STANDARD HEATER WIRING
TURN SIG & STOP LIGHT WIRING
BLACK OUT LIGHT WIRING W/O DRL
FREIGHTLINER CORPORATION
SCHEMATIC-MAIN SYSTEMS.GVG
D06-22694
DO NOT SCALE COPIES OF THIS DRAWING

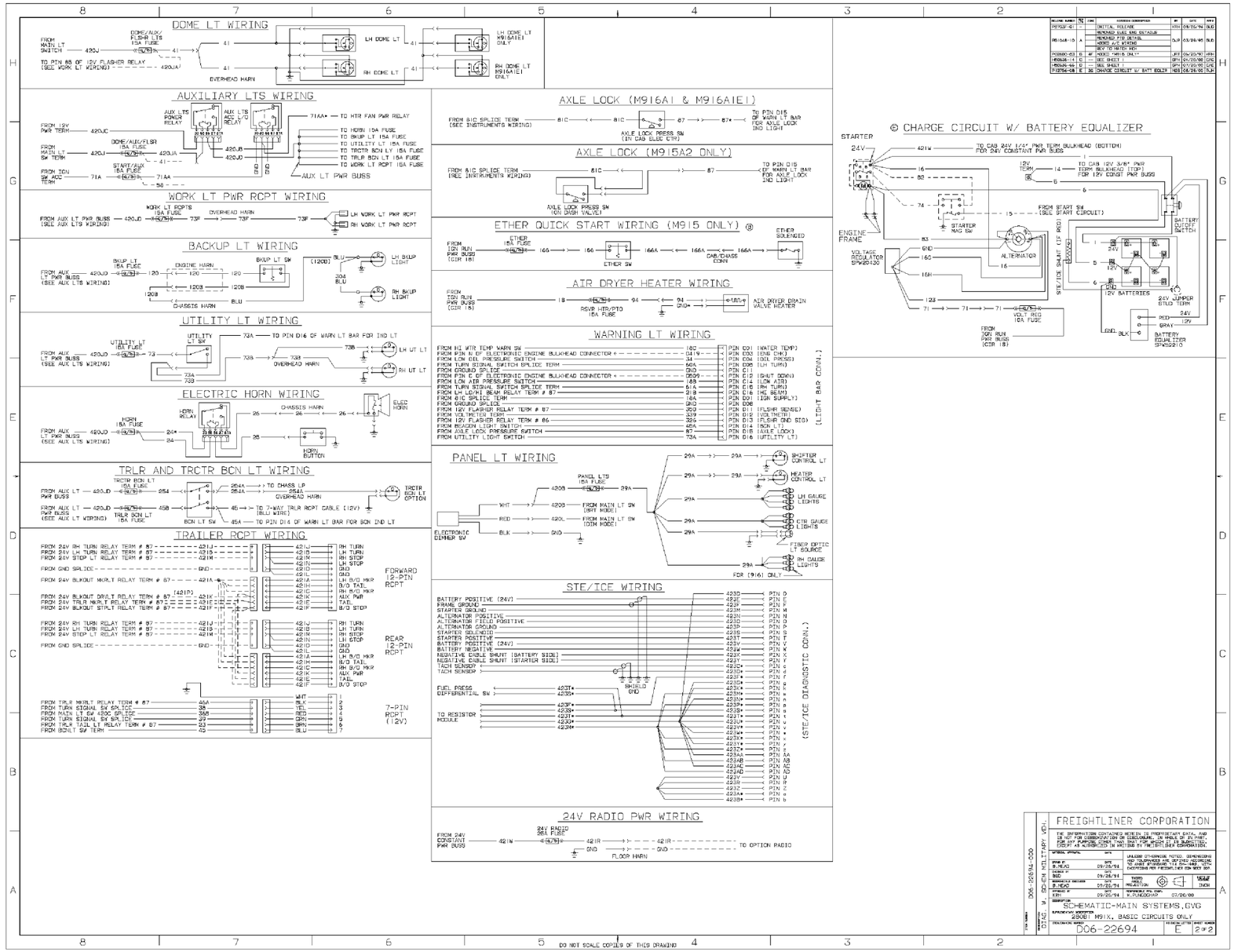
DOME LT WIRING
AUXILIARY LTS WIRING
WORK LT PWR RCPT WIRING
BACKUP LT WIRING
UTILITY LT WIRING
ELECTRIC HORN WIRING
TRLR AND TRCTR BCN LT WIRING
TRAILER RCPT WIRING
AXLE LOCK (M916A1 & M916A1E1)
AXLE LOCK (M915A2 ONLY)
ETHER QUICK START WIRING (M915 ONLY)
AIR DRYER HEATER WIRING
WARNING LT WIRING
PANEL LT WIRING
STE/ICE WIRING
24V RADIO PWR WIRING
CHARGE CIRCUIT W/ BATTERY EQUALIZER
FREIGHTLINER CORPORATION
SCHEMATIC-MAIN SYSTEMS,GVG
D06-22694
DO NOT SCALE COPIES OF THIS DRAWING

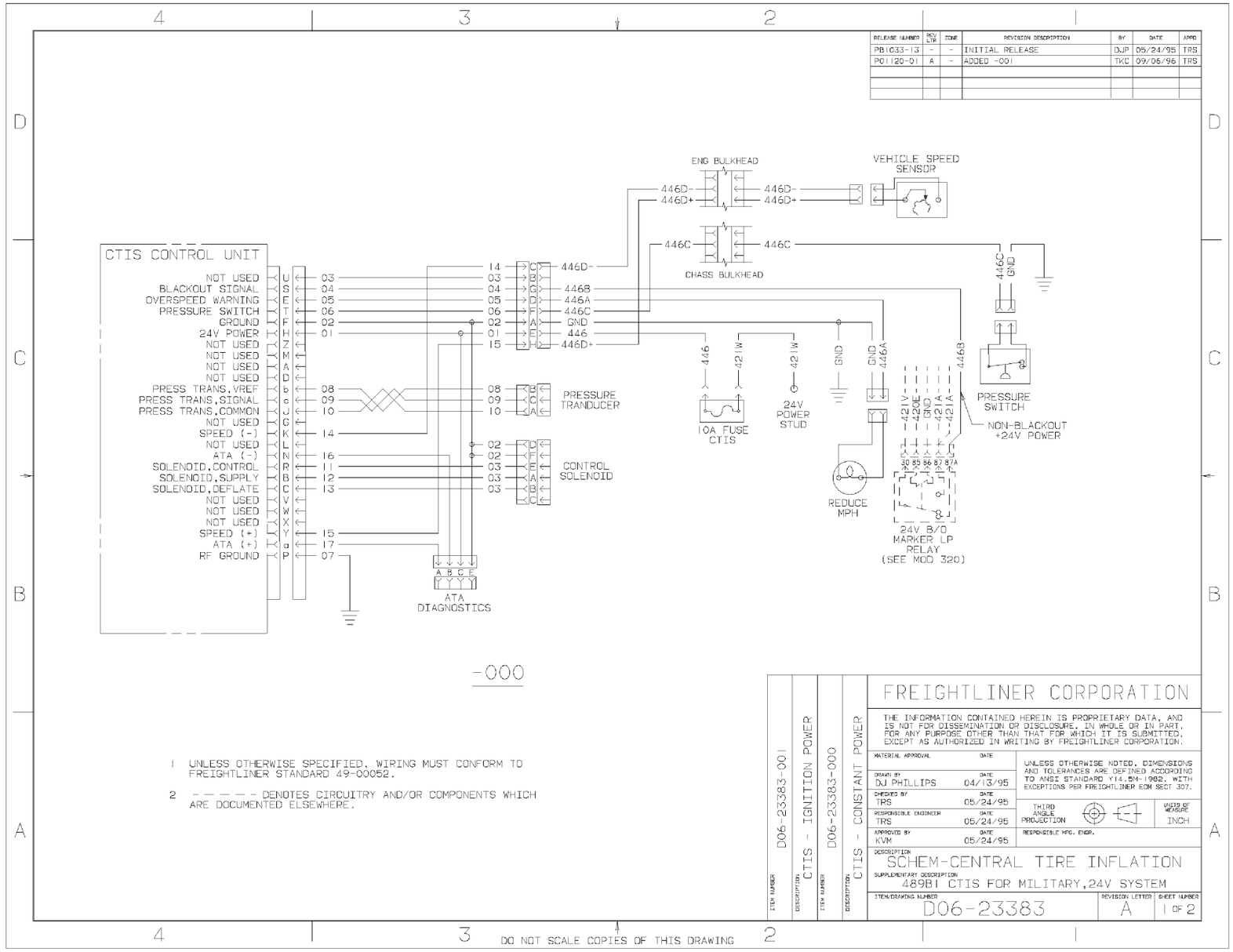
RELEASE NUMBER | REV LTR | ZONE | REVISION DESCRIPTION | BY | DATE | APPD
PB1033-13 | - | - | INITIAL RELEASE | DJP | 05/24/95 | TRS
P01120-01 | A | - | ADDED -001 | TKC | 09/06/96 | TRS
CTIS CONTROL UNIT
NOT USED
BLACKOUT SIGNAL
OVERSPEED WARNING
PRESSURE SWITCH
GROUND
24V POWER
NOT USED
NOT USED
NOT USED
NOT USED
PRESS TRANS.VREF
PRESS TRANS.SIGNAL
PRESS TRANS.COMMON
NOT USED
SPEED (-)
NOT USED
ATA (-)
SOLENOID.CONTROL
SOLENOID.SUPPLY
SOLENOID.DEFLATE
NOT USED
NOT USED
NOT USED
SPEED (+)
ATA (+)
RF GROUND
PRESSURE TRANDUCER
CONTROL SOLENOID
ATA DIAGNOSTICS
ENG BULKHEAD
CHASS BULKHEAD
VEHICLE SPEED SENSOR
446D-
446D+
446C
446B
446A
GND
446
421W
10A FUSE CTIS
24V POWER STUD
REDUCE MPH
24V B/O MARKER LP RELAY (SEE MOD 320)
PRESSURE SWITCH
NON-BLACKOUT +24V POWER
-000
1 UNLESS OTHERWISE SPECIFIED, WIRING MUST CONFORM TO FREIGHTLINER STANDARD 49-00052.
2 - - - - - DENOTES CIRCUITRY AND/OR COMPONENTS WHICH ARE DOCUMENTED ELSEWHERE.
D06-23383-001
CTIS - IGNITION POWER
D06-23383-000
CTIS - CONSTANT POWER
FREIGHTLINER CORPORATION
THE INFORMATION CONTAINED HEREIN IS PROPRIETARY DATA, AND IS NOT FOR DISSEMINATION OR DISCLOSURE, IN WHOLE OR IN PART, FOR ANY PURPOSE OTHER THAN THAT FOR WHICH IT IS SUBMITTED, EXCEPT AS AUTHORIZED IN WRITING BY FREIGHTLINER CORPORATION.
DRAWN BY DJ PHILLIPS 04/13/95
CHECKED BY TRS 05/24/95
RESPONSIBLE ENGINEER TRS 05/24/95
APPROVED BY KVM 05/24/95
UNLESS OTHERWISE NOTED, DIMENSIONS AND TOLERANCES ARE DEFINED ACCORDING TO ANSI STANDARD Y14.5M-1982, WITH EXCEPTIONS PER FREIGHTLINER EDM SECT 307.
THIRD ANGLE PROJECTION
UNITS OF MEASURE INCH
RESPONSIBLE MFG. ENGR.
DESCRIPTION SCHEM-CENTRAL TIRE INFLATION
SUPPLEMENTARY DESCRIPTION 489B1 CTIS FOR MILITARY,24V SYSTEM
ITEM/DRAWING NUMBER D06-23383
REVISION LETTER A
SHEET NUMBER 1 OF 2
DO NOT SCALE COPIES OF THIS DRAWING

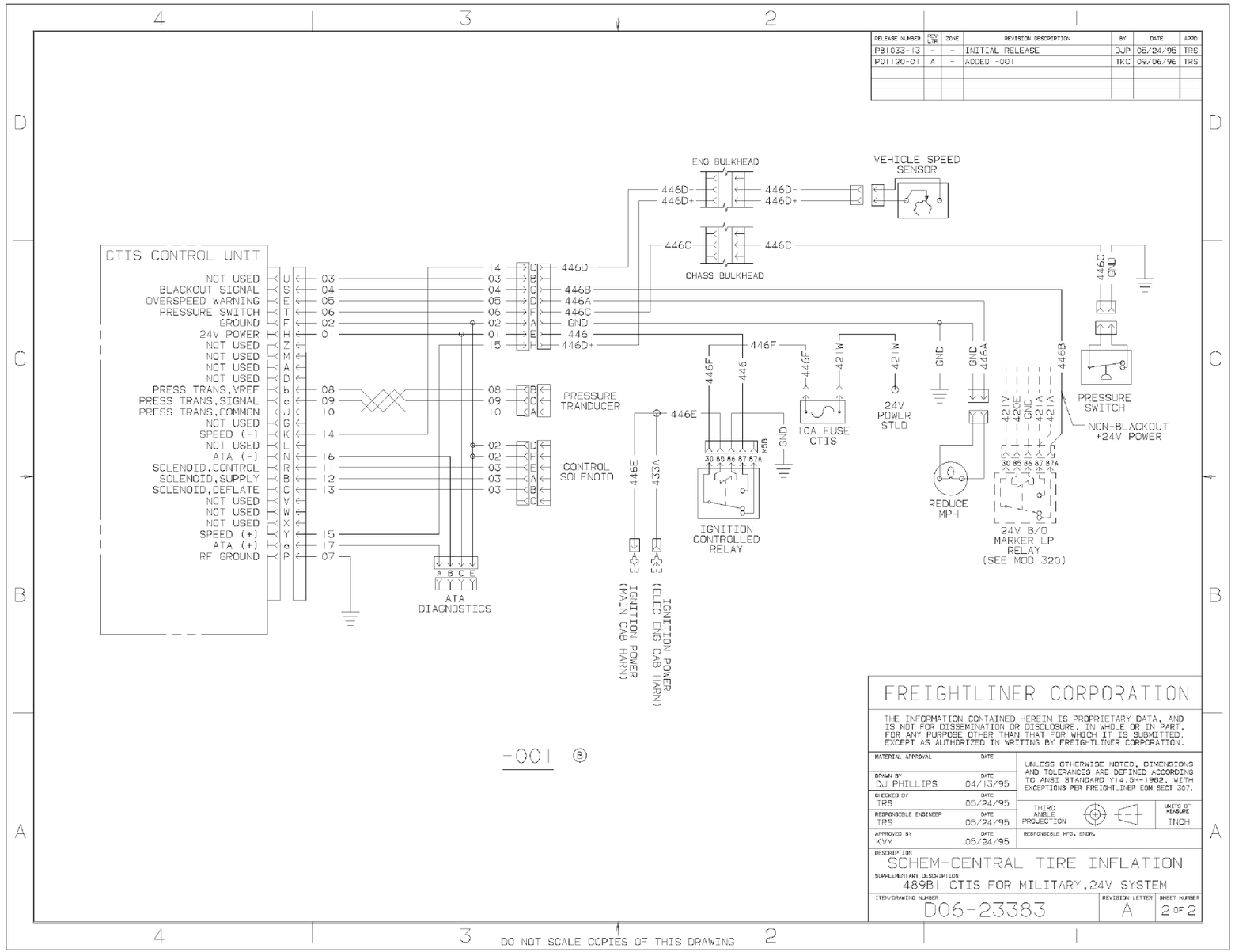
RELEASE NUMBER | REV LTR | ZONE | REVISION DESCRIPTION | BY | DATE | APPD
P81033-13 | - | - | INITIAL RELEASE | DJP | 05/24/95 | TRS
P01120-01 | A | - | ADDED -001 | TKC | 09/06/96 | TRS
CTIS CONTROL UNIT
NOT USED
BLACKOUT SIGNAL
OVERSPEED WARNING
PRESSURE SWITCH
GROUND
24V POWER
PRESS TRANS.VREF
PRESS TRANS.SIGNAL
PRESS TRANS.COMMON
SPEED (-)
ATA (-)
SOLENOID.CONTROL
SOLENOID.SUPPLY
SOLENOID.DEFLATE
SPEED (+)
ATA (+)
RF GROUND
ENG BULKHEAD
CHASS BULKHEAD
VEHICLE SPEED SENSOR
PRESSURE TRANDUCER
CONTROL SOLENOID
ATA DIAGNOSTICS
IGNITION CONTROLLED RELAY
10A FUSE CTIS
24V POWER STUD
REDUCE MPH
24V B/O MARKER LP RELAY (SEE MOD 320)
PRESSURE SWITCH
NON-BLACKOUT +24V POWER
IGNITION POWER (MAIN CAB HARN)
IGNITION POWER (ELEC ENG CAB HARN)
-001 B
FREIGHTLINER CORPORATION
THE INFORMATION CONTAINED HEREIN IS PROPRIETARY DATA, AND IS NOT FOR DISSEMINATION OR DISCLOSURE, IN WHOLE OR IN PART, FOR ANY PURPOSE OTHER THAN THAT FOR WHICH IT IS SUBMITTED, EXCEPT AS AUTHORIZED IN WRITING BY FREIGHTLINER CORPORATION.
MATERIAL APPROVAL DATE
DRAWN BY DJ PHILLIPS DATE 04/13/95
CHECKED BY TRS DATE 05/24/95
RESPONSIBLE ENGINEER TRS DATE 05/24/95
APPROVED BY KVM DATE 05/24/95
UNLESS OTHERWISE NOTED, DIMENSIONS AND TOLERANCES ARE DEFINED ACCORDING TO ANSI STANDARD Y14.5M-1982, WITH EXCEPTIONS PER FREIGHTLINER EOM SECT 307.
THIRD ANGLE PROJECTION
UNITS OF MEASURE INCH
RESPONSIBLE MFG. ENGR.
DESCRIPTION
SCHEM-CENTRAL TIRE INFLATION
SUPPLEMENTARY DESCRIPTION
489BI CTIS FOR MILITARY,24V SYSTEM
ITEM/DRAWING NUMBER D06-23383
REVISION LETTER A
SHEET NUMBER 2 OF 2
DO NOT SCALE COPIES OF THIS DRAWING

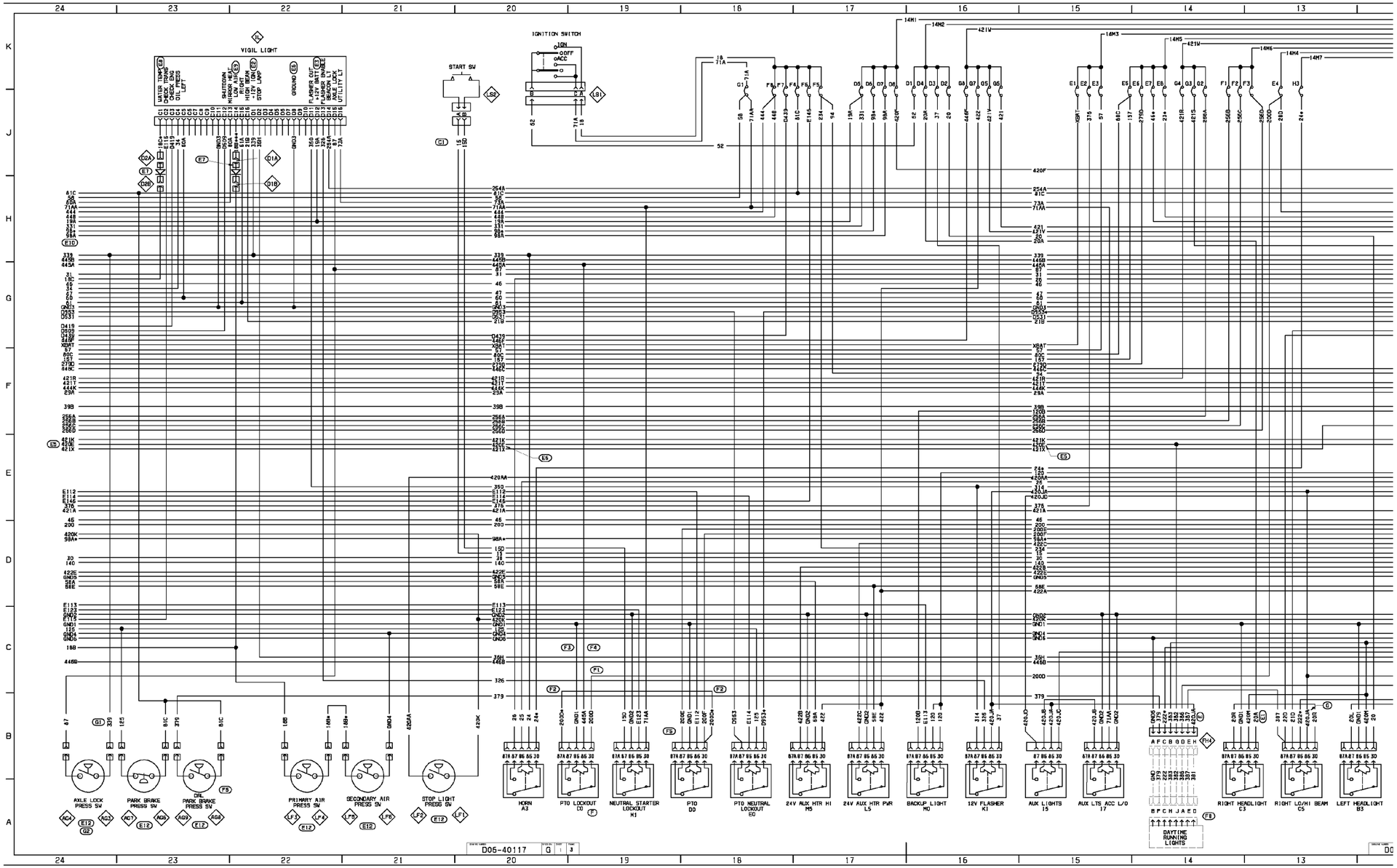
VIGIL LIGHT
WATER TEMP
CHARGE TRANS
CHARGE SYS
OIL PRESS
LEFT
BATTERY
MIRROR HEAT
LOW AIR
HIGH BEAM
RIGHT TURN
STOP LAMP
GROUND
FLASHER OUT
12V BATT
PARKING BRAKE
BEACON LT
AIR LOCK
UTILITY LT
IGNITION SWITCH
IGN
OFF
ACC
START SW
AXLE LOCK PRESS SW
PARK BRAKE PRESS SW
CRL PARK BRAKE PRESS SW
PRIMARY AIR PRESS SW
SECONDARY AIR PRESS SW
STOP LIGHT PRESS SW
HORN A3
PTO LOCKOUT D0
NEUTRAL STARTER LOCKOUT H1
PTO D0
PTO NEUTRAL LOCKOUT E0
24V AUX HTR H1 M5
24V AUX HTR PWR L5
BACKUP LIGHT M0
12V FLASHER K1
AUX LIGHTS I5
AUX LTS ACC L/O I7
RIGHT HEADLIGHT C3
RIGHT LO/HI BEAM C5
LEFT HEADLIGHT B3
DAYTIME RUNNING LIGHTS
D05-40117

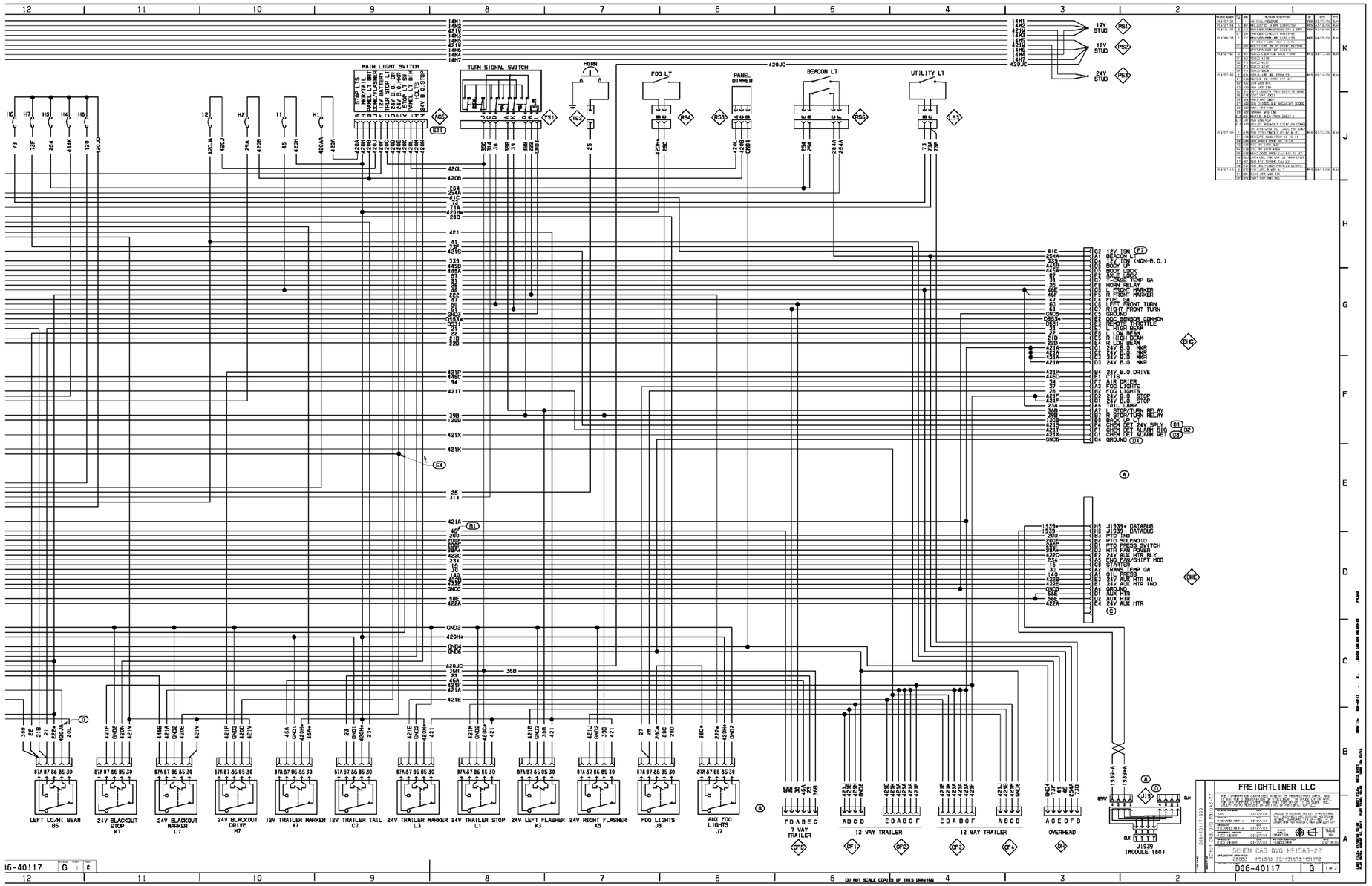
MAIN LIGHT SWITCH
TURN SIGNAL SWITCH
HORN
FOG LT
PANEL DIMMER
BEACON LT
UTILITY LT
12V STUD
24V STUD
LEFT LO/HI BEAM B5
24V BLACKOUT STOP K7
24V BLACKOUT MARKER L7
24V BLACKOUT DRIVE M7
12V TRAILER MARKER A7
12V TRAILER TAIL C7
24V TRAILER MARKER L3
24V TRAILER STOP C1
24V LEFT FLASHER K3
24V RIGHT FLASHER K5
FOG LIGHTS J3
AUX FOG LIGHTS J7
7 WAY TRAILER
12 WAY TRAILER
12 WAY TRAILER
OVERHEAD
J1939 (MODULE 160)
FREIGHTLINER LLC
SCHEM CAB.GVG M915A3-22
DO NOT SCALE COPIES OF THIS DRAWING

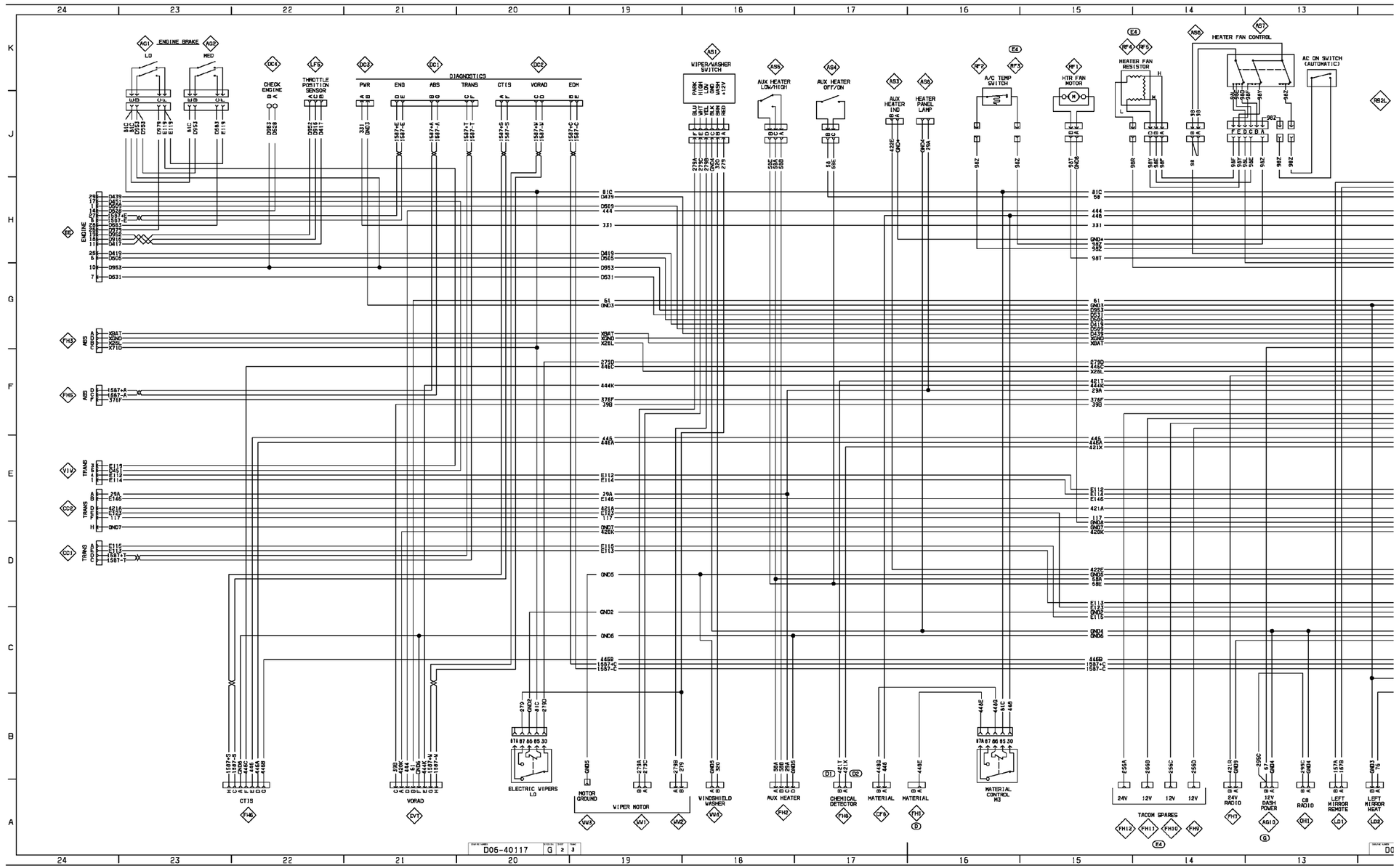
ENGINE BRAKE
LO
MED
CHECK ENGINE
THROTTLE POSITION SENSOR
DIAGNOSTICS
PWR
ENG
ABS
TRANS
CTIS
VORAD
EDM
WIPER/WASHER SWITCH
AUX HEATER LOW/HIGH
AUX HEATER OFF/ON
AUX HEATER IND
HEATER PANEL LAMP
A/C TEMP SWITCH
HTR FAN MOTOR
HEATER FAN RESISTOR
HEATER FAN CONTROL
AC ON SWITCH (AUTOMATIC)
ENGINE
ABS
TRANS
CTIS
VORAD
ELECTRIC WIPERS LO
MOTOR GROUND
WIPER MOTOR
WINDSHIELD WASHER
AUX HEATER
CHEMICAL DETECTOR
MATERIAL
MATERIAL
MATERIAL CONTROL M3
TACOM SPARES
24V
12V
12V
12V
24V RADIO
12V DASH POWER
CB RADIO
LEFT MIRROR REMOTE
LEFT MIRROR HEAT
D05-40117

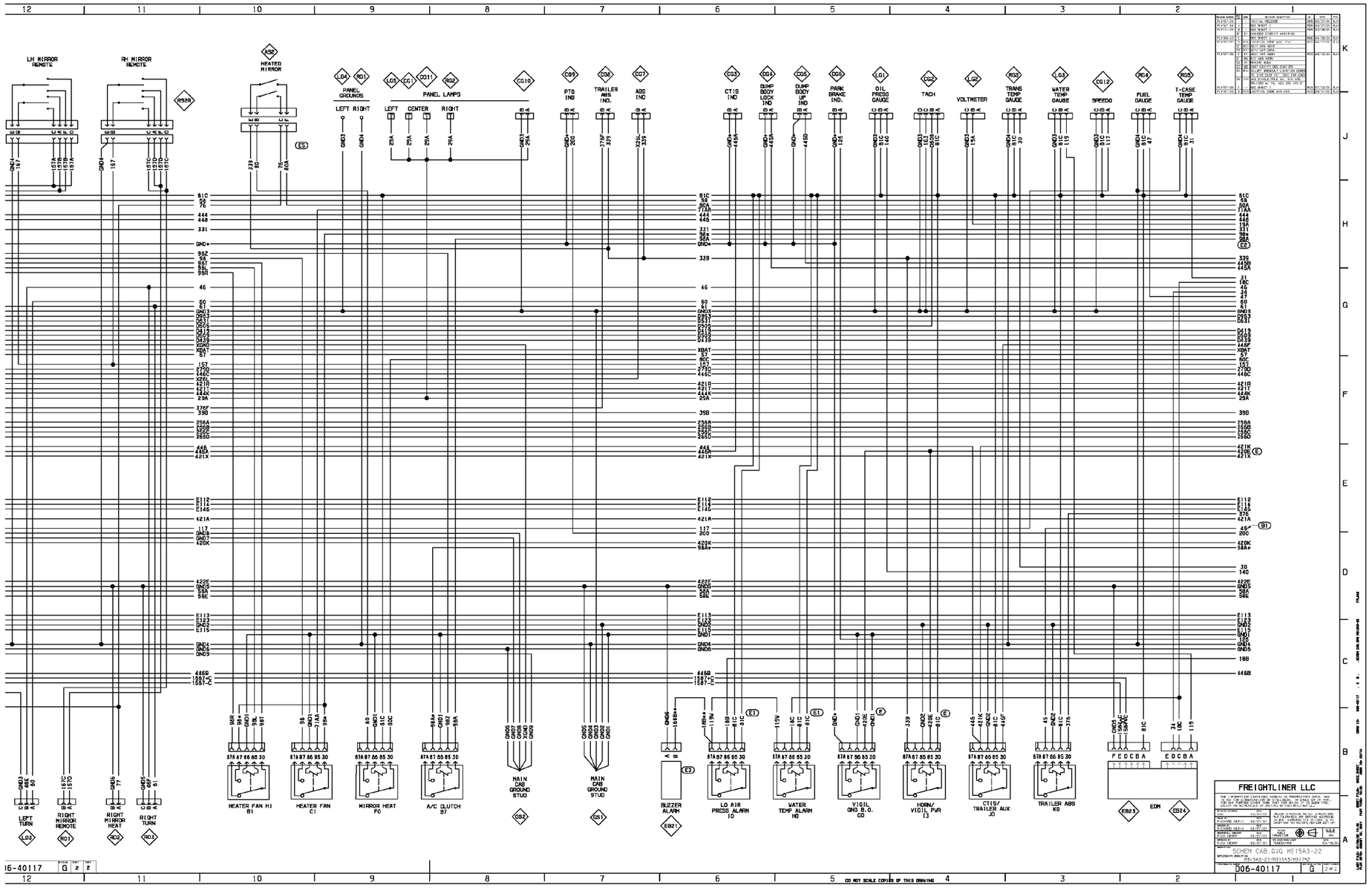
LH MIRROR REMOTE
RH MIRROR REMOTE
HEATED MIRROR
PANEL GROUNDS
LEFT RIGHT
PANEL LAMPS
LEFT CENTER RIGHT
PTO IND
TRAILER ABS IND.
ABS IND
CTIS IND
DUMP BODY LOCK IND
DUMP BODY UP IND
PARK BRAKE IND.
OIL PRESS GAUGE
TACH
VOLTMETER
TRANS TEMP GAUGE
WATER TEMP GAUGE
SPEEDO
FUEL GAUGE
T-CASE TEMP GAUGE
LEFT TURN
RIGHT MIRROR REMOTE
RIGHT MIRROR HEAT
RIGHT TURN
HEATER FAN HI B1
HEATER FAN C1
MIRROR HEAT F0
A/C CLUTCH B7
MAIN CAB GROUND STUD
BUZZER ALARM
LO AIR PRESS ALARM I0
WATER TEMP ALARM H0
VIGIL QNG B.O. C0
HORN/ VIGIL PWR I3
CTIS/ TRAILER AUX J0
TRAILER ABS K0
EDM
FREIGHTLINER LLC
SCHEM CAB.GVG M515A3-22
M515A3-212033545/103192
D06-40117
G
DO NOT SCALE COPIES OF THIS DRAWING

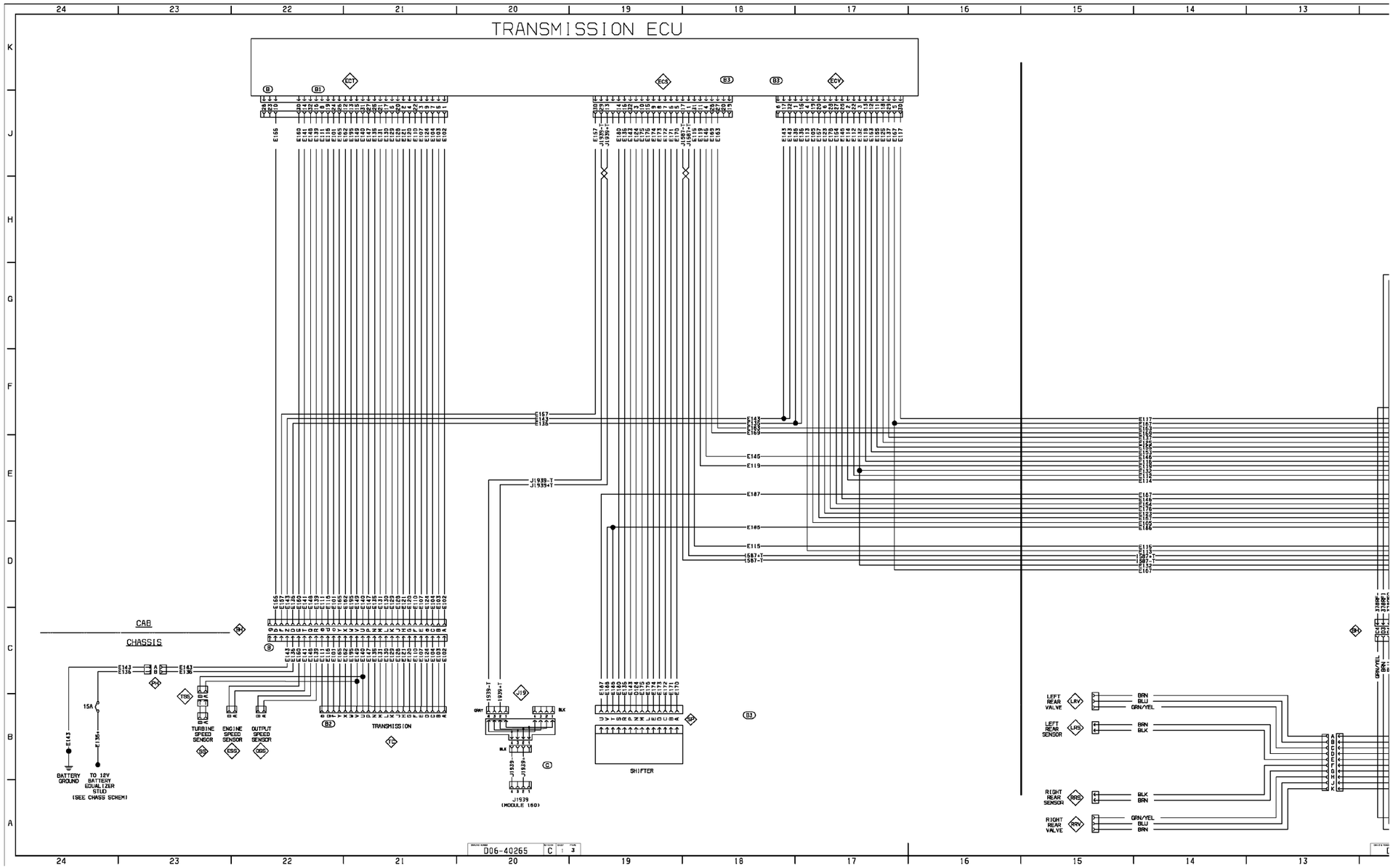
TRANSMISSION ECU
CAB
CHASSIS
15A
BATTERY GROUND
TO 12V BATTERY EQUALIZER STUD (SEE CHASS SCHEM)
TURBINE SPEED SENSOR
ENGINE SPEED SENSOR
OUTPUT SPEED SENSOR
TRANSMISSION
J1939 (MODULE 160)
SHIFTER
LEFT REAR VALVE
LEFT REAR SENSOR
RIGHT REAR SENSOR
RIGHT REAR VALVE
D06-40265

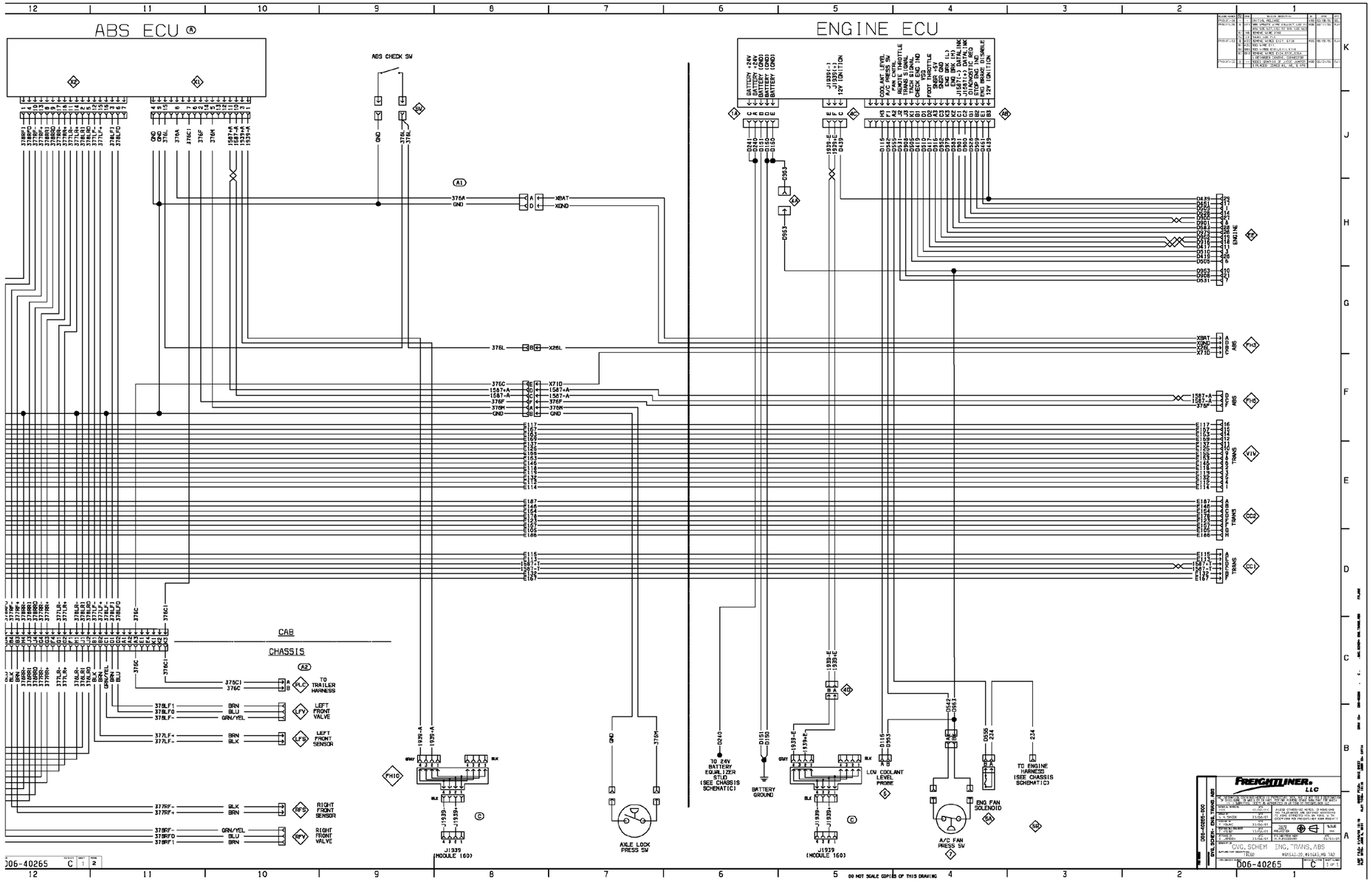
ABS ECU
ENGINE ECU
ABS CHECK SW
CAB
CHASSIS
TO TRAILER HARNESS
LEFT FRONT VALVE
LEFT FRONT SENSOR
RIGHT FRONT SENSOR
RIGHT FRONT VALVE
TO 24V BATTERY EQUALIZER STUD (SEE CHASSIS SCHEMATIC)
BATTERY GROUND
LOW COOLANT LEVEL PROBE
TO ENGINE HARNESS (SEE CHASSIS SCHEMATIC)
ENG FAN SOLENOID
A/C FAN PRESS SW
AXLE LOCK PRESS SW
J1939 (MODULE 160)
FREIGHTLINER LLC
D06-40265-000
ENG, TRANS, ABS
SCHEM: ENG, TRANS, ABS
D06-40265
DO NOT SCALE COPIES OF THIS DRAWING

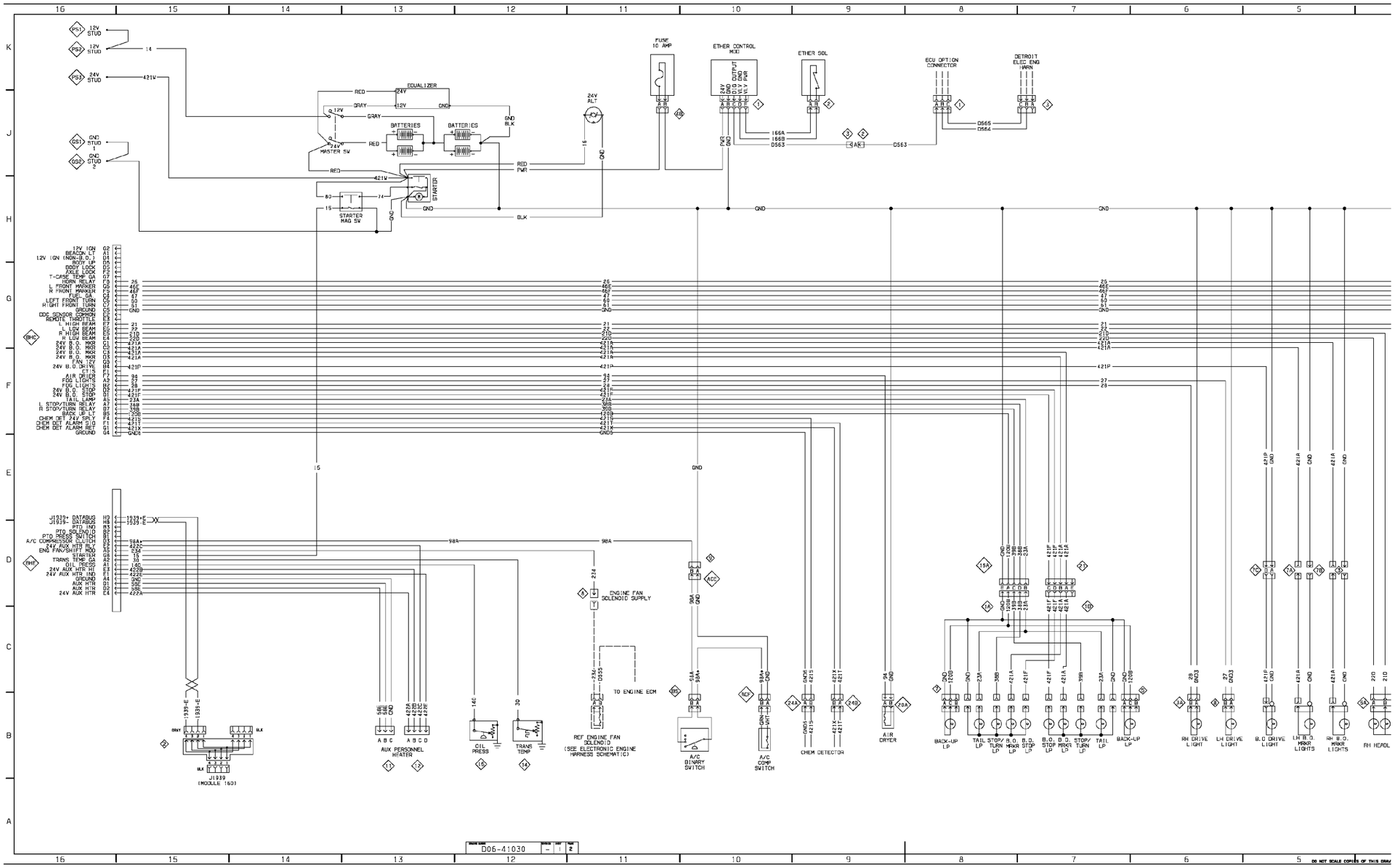
12V STUD
24V STUD
GND STUD
EQUALIZER
BATTERIES
MASTER SW
STARTER
STARTER MAG SW
FUSE 10 AMP
ETHER CONTROL MOD
ETHER SOL
ECU OPTION CONNECTOR
DETROIT ELEC ENG HARN
24V ALT
ENGINE FAN SOLENOID SUPPLY
TO ENGINE ECM
REF ENGINE FAN SOLENOID (SEE ELECTRONIC ENGINE HARNESS SCHEMATIC)
J1939 (MODULE 160)
AUX PERSONNEL HEATER
OIL PRESS
TRANS TEMP
A/C BINARY SWITCH
A/C COMP SWITCH
CHEM DETECTOR
AIR DRYER
BACK-UP LP
TAIL STOP/ TURN LP
B.O. MRKR LP
B.O. STOP LP
B.O. STOP/ TURN LP
TAIL LP
RH DRIVE LIGHT
LH DRIVE LIGHT
B.O DRIVE LIGHT
LH B.O. MRKR LIGHTS
RH B.O. MRKR LIGHTS
RH HEADL
D06-41030
DO NOT SCALE COPIES OF THIS DRAW

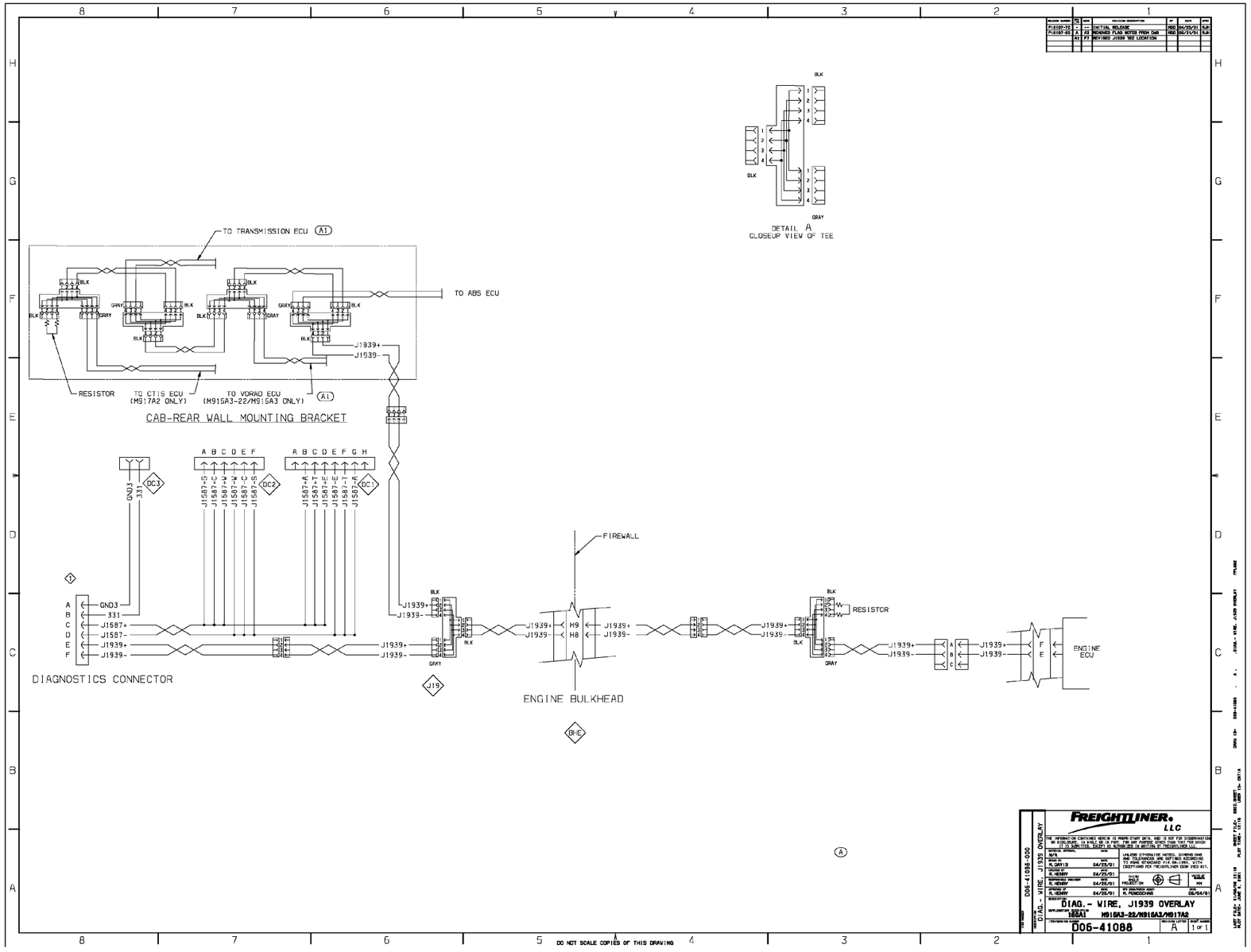
TO TRANSMISSION ECU (A1)
TO ABS ECU
RESISTOR
TO CTIS ECU (M917A2 ONLY)
TO VORAD ECU (M915A3-22/M915A3 ONLY)
CAB-REAR WALL MOUNTING BRACKET
DIAGNOSTICS CONNECTOR
FIREWALL
ENGINE BULKHEAD
ENGINE ECU
DETAIL A
CLOSEUP VIEW OF TEE
FREIGHTLINER LLC
DIAG.- WIRE, J1939 OVERLAY
M915A3-22/M915A3/M917A2
D06-41088
DO NOT SCALE COPIES OF THIS DRAWING

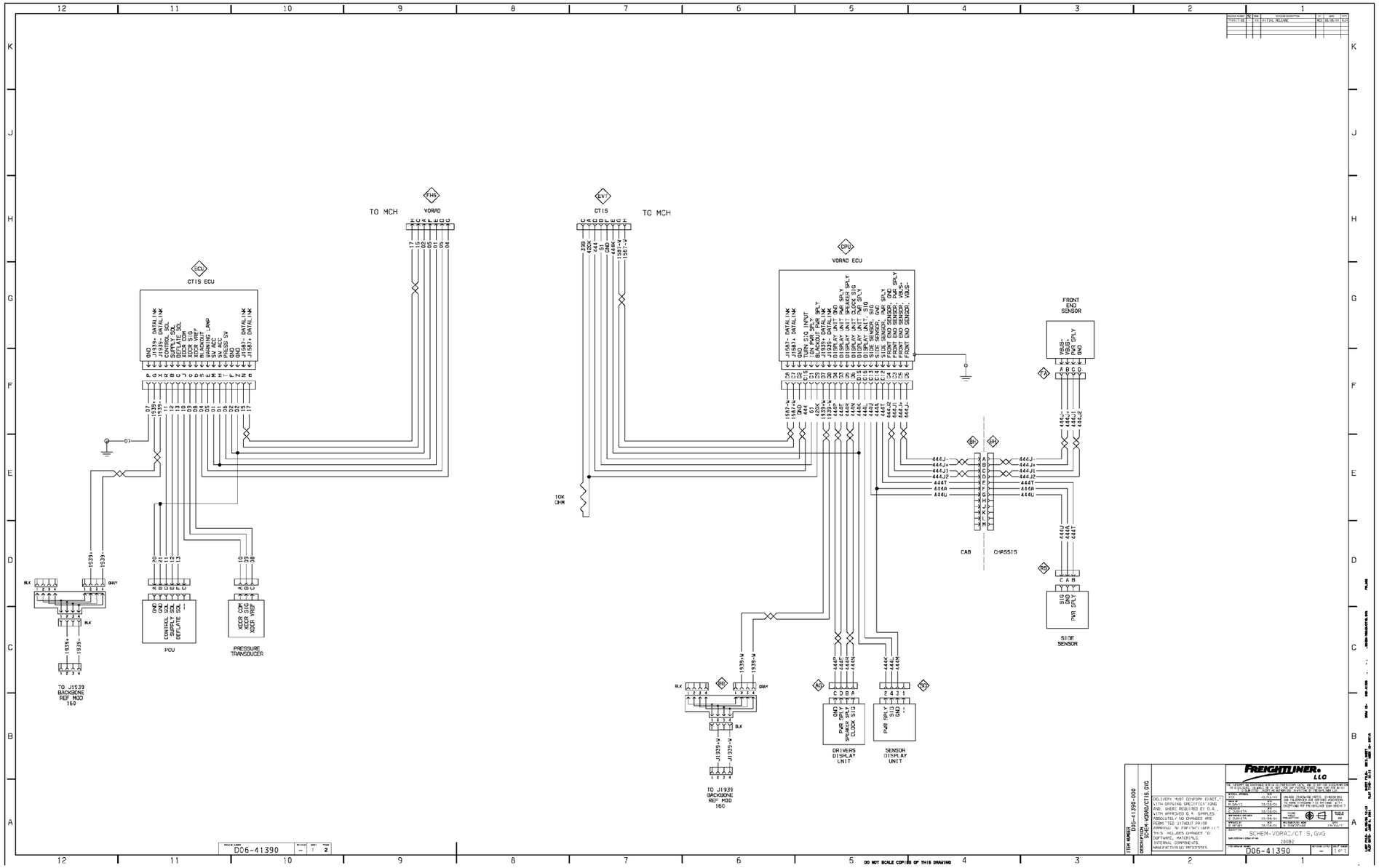
CTIS ECU
VORAD
TO MCH
CTIS
TO MCH
VORAD ECU
FRONT END SENSOR
PCU
PRESSURE TRANSDUCER
SIDE SENSOR
CAB
CHASSIS
TO J1939 BACKBONE REF MOD 160
DRIVERS DISPLAY UNIT
SENSOR DISPLAY UNIT
10K OHM
D06-41390
FREIGHTLINER LLC
SCHEM-VORAD/CTIS,GVG
D06-41390
DO NOT SCALE COPIES OF THIS DRAWING

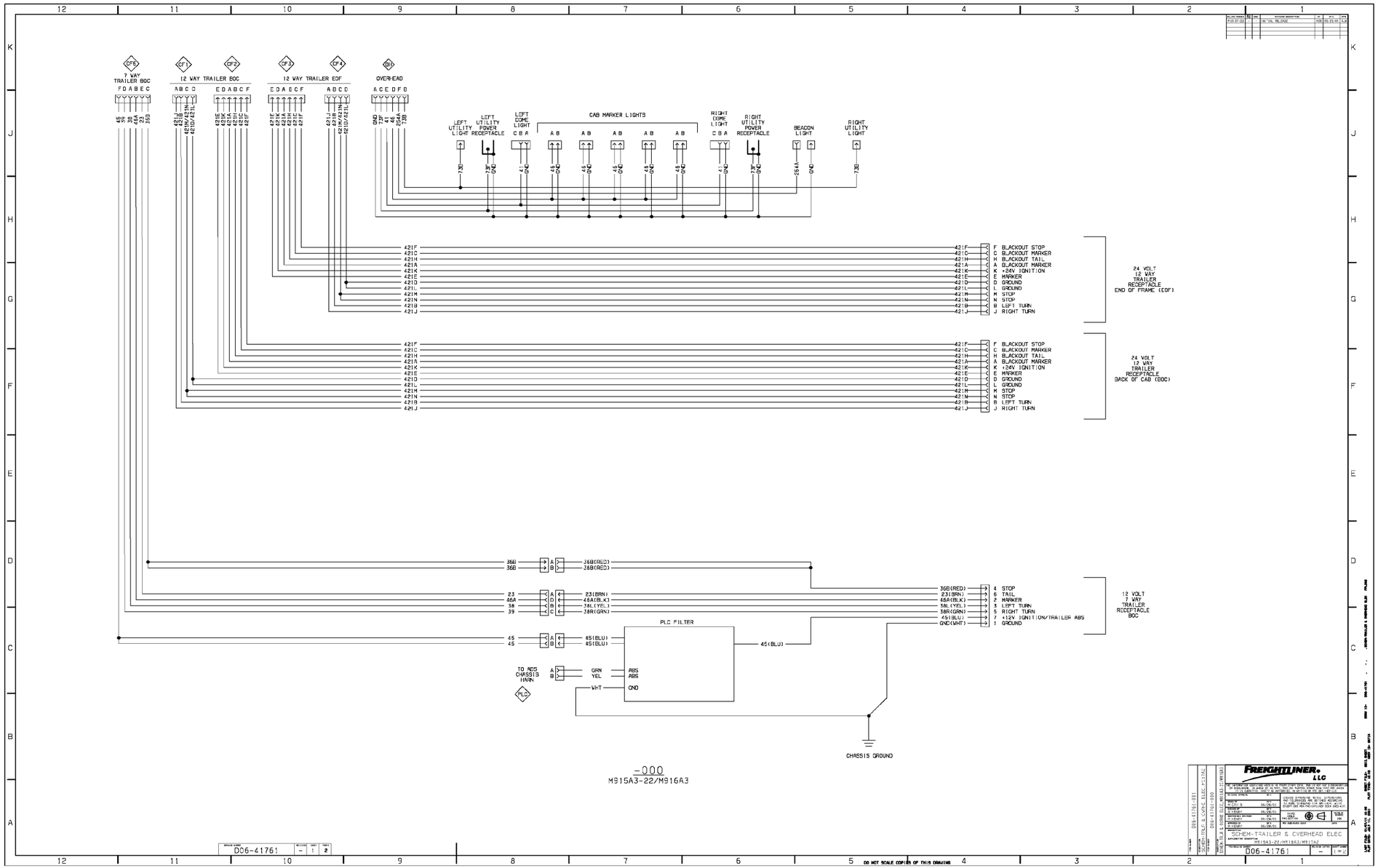
7 WAY TRAILER BOC
12 VAY TRAILER BOC
12 VAY TRAILER EOF
OVERHEAD
LEFT UTILITY LIGHT
LEFT UTILITY POWER RECEPTACLE
LEFT DOME LIGHT
CAB MARKER LIGHTS
RIGHT DOME LIGHT
RIGHT UTILITY POWER RECEPTACLE
BEACON LIGHT
RIGHT UTILITY LIGHT
24 VOLT 12 VAY TRAILER RECEPTACLE END OF FRAME (EOF)
24 VOLT 12 VAY TRAILER RECEPTACLE BACK OF CAB (BOC)
12 VOLT 7 VAY TRAILER RECEPTACLE BOC
PLC FILTER
TO ABS CHASSIS HARN
CHASSIS GROUND
-000
M915A3-22/M916A3
FREIGHTLINER LLC
SCHEM-TRLR & OVRHD ELEC
M915A3-22/M916A3
D06-41761

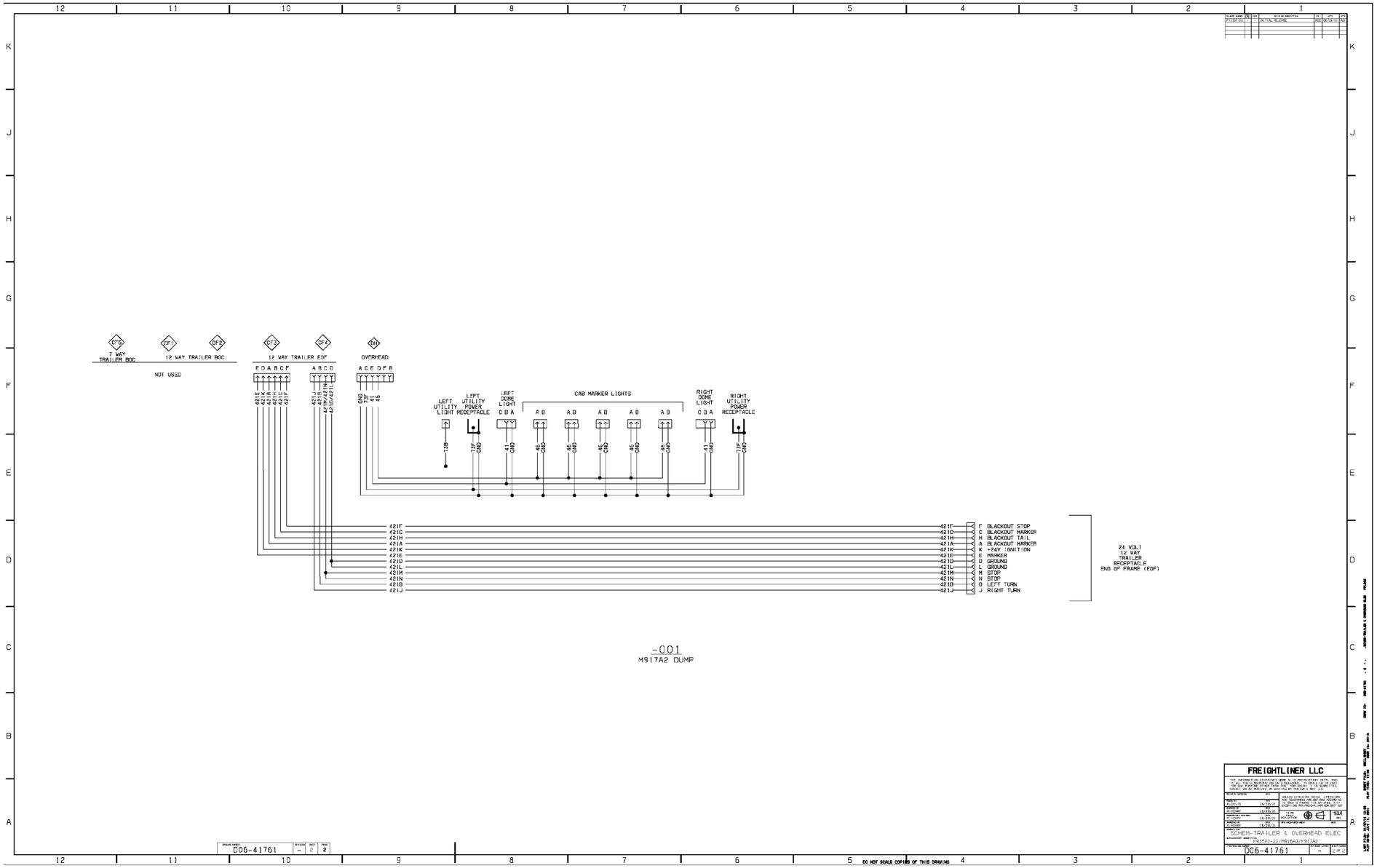
7 WAY TRAILER BOC
12 WAY TRAILER BOC
NOT USED
12 WAY TRAILER EOF
OVERHEAD
LEFT UTILITY LIGHT RECEPTACLE
LEFT UTILITY POWER RECEPTACLE
LEFT DOME LIGHT
CAB MARKER LIGHTS
RIGHT DOME LIGHT
RIGHT UTILITY POWER RECEPTACLE
421F BLACKOUT STOP
421C BLACKOUT MARKER
421H BLACKOUT TAIL
421A BLACKOUT MARKER
421K +24V IGNITION
421E MARKER
421D GROUND
421L GROUND
421M STOP
421N STOP
421B LEFT TURN
421J RIGHT TURN
24 VOLT 12 WAY TRAILER RECEPTACLE END OF FRAME (EOF)
-001
M917A2 DUMP
FREIGHTLINER LLC
SCHEM-TRAILER & OVERHEAD ELEC
D06-41761

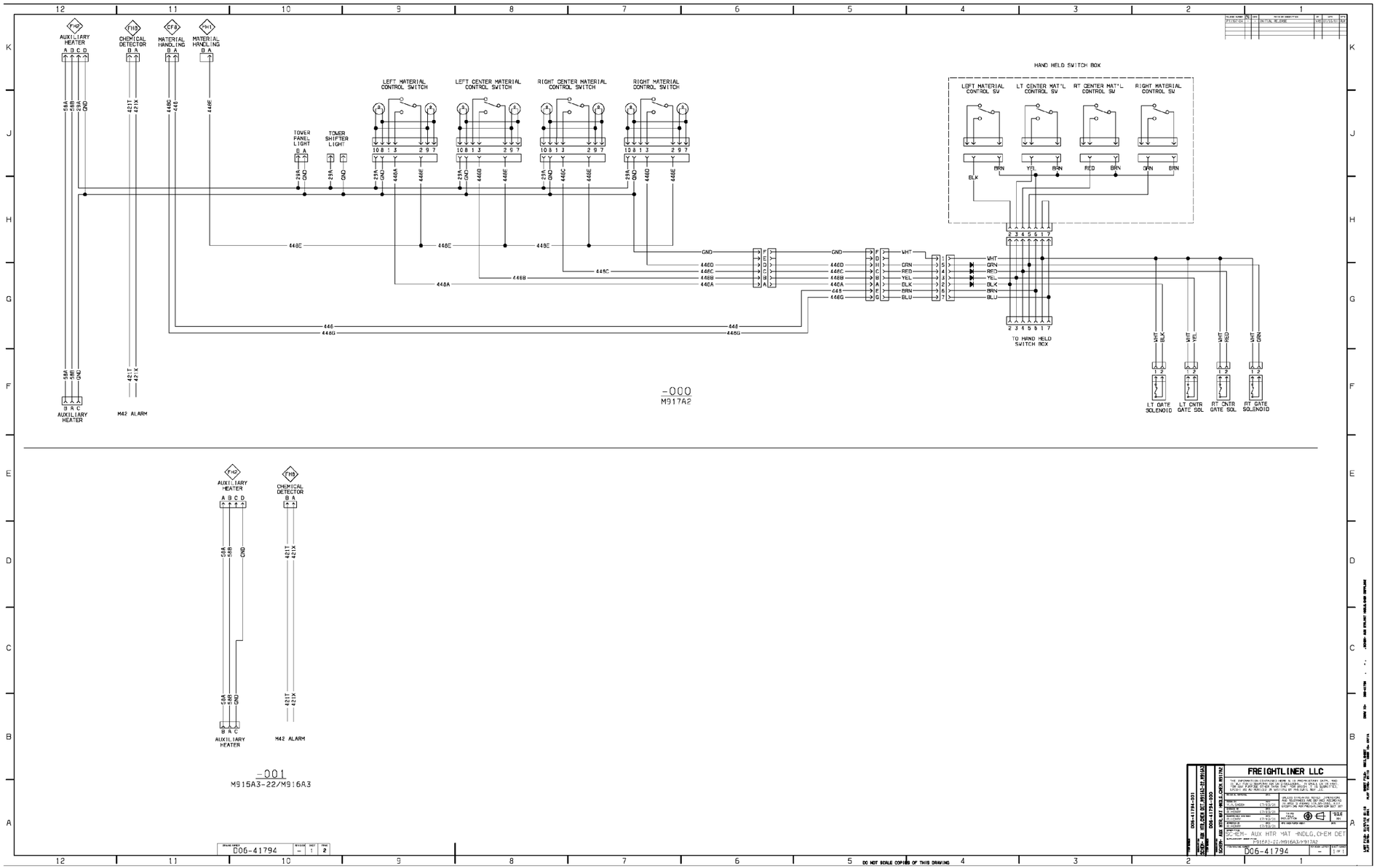
AUXILIARY HEATER
CHEMICAL DETECTOR
MATERIAL HANDLING
MATERIAL HANDLING
LEFT MATERIAL CONTROL SWITCH
LEFT CENTER MATERIAL CONTROL SWITCH
RIGHT CENTER MATERIAL CONTROL SWITCH
RIGHT MATERIAL CONTROL SWITCH
TOWER PANEL LIGHT
TOWER SHIFTER LIGHT
HAND HELD SWITCH BOX
LEFT MATERIAL CONTROL SW
LT CENTER MAT'L CONTROL SW
RT CENTER MAT'L CONTROL SW
RIGHT MATERIAL CONTROL SW
TO HAND HELD SWITCH BOX
LT GATE SOLENOID
LT CNTR GATE SOL
RT CNTR GATE SOL
RT GATE SOLENOID
AUXILIARY HEATER
M42 ALARM
-000
M917A2
AUXILIARY HEATER
CHEMICAL DETECTOR
AUXILIARY HEATER
M42 ALARM
-001
M915A3-22/M916A3
FREIGHTLINER LLC
D06-41794

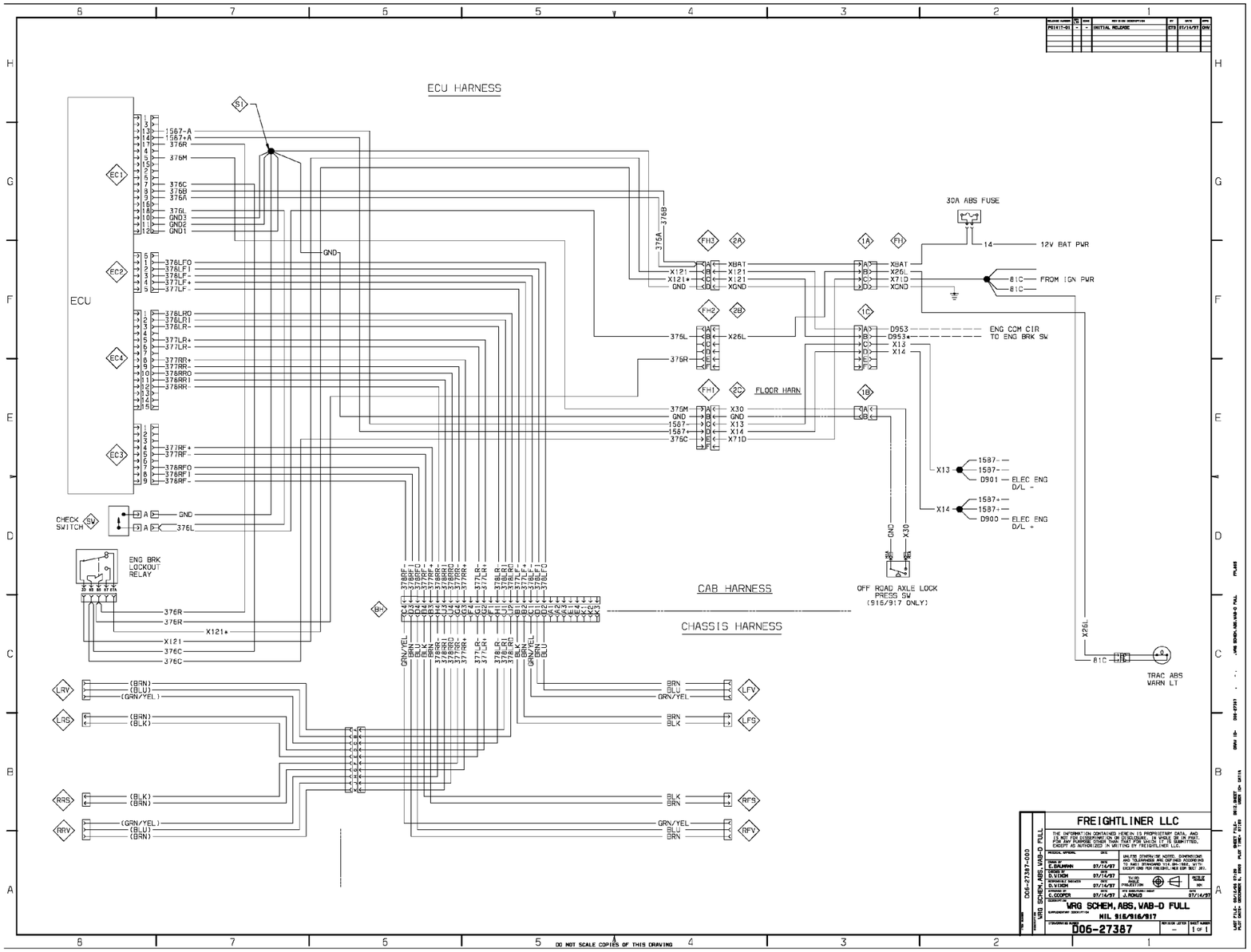
ECU HARNESS
ECU
EC1
EC2
EC3
EC4
CHECK SWITCH
SW
ENG BRK LOCKOUT RELAY
30A ABS FUSE
12V BAT PWR
FROM IGN PWR
ENG COM CIR TO ENG BRK SW
FLOOR HARN
OFF ROAD AXLE LOCK PRESS SW (915/917 ONLY)
ELEC ENG D/L -
ELEC ENG D/L +
TRAC ABS WARN LT
CAB HARNESS
CHASSIS HARNESS
LRV
LRS
RRS
RRV
LFV
LFS
RFS
RFV
FREIGHTLINER LLC
WRG SCHEM, ABS, VAB-D FULL
MIL 915/916/917
D06-27387
DO NOT SCALE COPIES OF THIS DRAWING

By Order of the Secretary of the Army:

PETER J. SCHOOMAKER
General, United States Army
Chief of Staff

Official:

SANDRA R. RILEY
Administrative Assistant to the
Secretary of the Army
0409207

DISTRIBUTION:

To be distributed in accordance with the initial distribution number (IDN) 381147, requirements for TM 9-2320-302-20-2.

RECOMMENDED CHANGES TO PUBLICATIONS AND BLANK FORMS For use of this form, see AR 25-30; the proponent agency is ODISC4.	Use Part II (reverse) for Repair Parts and Special Tool Lists (RPSTL) and Supply Catalogs/Supply Manuals (SC/SM).	DATE Date you filled out this form.
TO: *(Forward to proponent of publication or form) (Include ZIP Code)* U.S. Army TACOM Life Cycle Management Command ATTN: AMSTA-LCL-MPP/TECH PUBS 6501 E. 11 Mile Road, Warren, MI 48397-5000	FROM: *(Activity and location) (Include ZIP Code)* Your mailing address	

PART I – ALL PUBLICATIONS (EXCEPT RPSTL AND SC/SM) AND BLANK FORMS

PUBLICATION/FORM NUMBER	DATE	Title
TM 9-2320-302-20-2	10 January 2011	Unit Maintenance Manual for M915 Family of Vehicles

ITEM NO.	PAGE NO.	PARA-GRAPH	LINE NO. *	FIGURE NO.	TABLE NO.	RECOMMENDED CHANGES AND REASON (Provide exact wording of recommended changes, if possible).
						SAMPLE

**Reference to line numbers within the paragraph or subparagraph.*

TYPED NAME, GRADE OR TITLE	TELEPHONE EXCHANGE/AUTOVON, PLUS EXTENSION	Signature
Your Name		*Your Signature*

DA FORM 2028, FEB 74 REPLACES DA FORM 2028, 1 DEC 68, WHICH WILL BE USED. USAPPC V3.00

TO: (Forward direct to addressee listed in publication)	FROM: (Activity and location) (Include ZIP Code)	DATE
U. S. Army TACOM Life Cycle Management Command ATTN: AMSTA-LCL-MPP/TECH PUBS 6501 E. 11 Mile Road, Warren, MI 48397-5000	Your address	Date you filled out this form

PART II – REPAIR PARTS AND SPECIAL TOOL LISTS AND SUPPLY CATALOGS/SUPPLY MANUALS

PUBLICATION NUMBER	DATE	TITLE
TM 9-2320-302-20-2	10 January 2011	Unit Maintenance Manual for M915 Family of Vehicles

PAGE NO.	COLM NO.	LINE NO.	NATIONAL STOCK NUMBER	REFERENCE NO.	FIGURE NO.	ITEM NO.	TOTAL NO. OF MAJOR ITEMS SUPPORTED	RECOMMENDED ACTION

SAMPLE

PART III – REMARKS **(Any general remarks or recommendations, or suggestions for improvement of publications and blank forms. Additional blank sheets may be used if more space is needed.)**

TYPED NAME, GRADE OR TITLE	TELEPHONE EXCHANGE/AUTOVON, PLUS EXTENSION	SIGNATURE
Your Name		Your Signature

USAPPC V3.00

RECOMMENDED CHANGES TO PUBLICATIONS AND BLANK FORMS For use of this form, see AR 25-30; the proponent agency is ODISC4.	Use Part II (reverse) for Repair Parts and Special Tool Lists (RPSTL) and Supply Catalogs/Supply Manuals (SC/SM).	DATE
TO: (Forward to proponent of publication or form)(Include ZIP Code) U.S. Army TACOM Life Cycle Management Command ATTN: AMSTA-LCL-MPP/TECH PUBS 6501 E. 11 Mile Road, Warren, MI 48397-5000	FROM: (Activity and location) (Include ZIP Code)	

PART I – ALL PUBLICATIONS (EXCEPT RPSTL AND SC/SM) AND BLANK FORMS

PUBLICATION/FORM NUMBER	DATE	TITLE
TM 9-2320-302-20-2	10 January 2011	Unit Maintenance Manual for M915 Family of Vehicles

ITEM NO.	PAGE NO.	PARA-GRAPH	LINE NO. *	FIGURE NO.	TABLE NO.	RECOMMENDED CHANGES AND REASON (Provide exact wording of recommended changes, if possible).

TYPED NAME, GRADE OR TITLE	*Reference to line numbers within the paragraph or subparagraph. TELEPHONE EXCHANGE/AUTOVON, PLUS EXTENSION	SIGNATURE

DA FORM 2028, FEB 74 REPLACES DA FORM 2028, 1 DEC 68, WHICH WILL BE USED. USAPPC V3.00

TO: (Forward direct to addressee listed in publication)	FROM: (Activity and location) (Include ZIP Code)	DATE
U. S. Army TACOM Life Cycle Management Command ATTN: AMSTA-LCL-MPP/TECH PUBS 6501 E. 11 Mile Road, Warren, MI 48397-5000		

PART II – REPAIR PARTS AND SPECIAL TOOL LISTS AND SUPPLY CATALOGS/SUPPLY MANUALS

PUBLICATION NUMBER	DATE	TITLE
TM 9-2320-302-20-2	10 January 2011	Unit Maintenance Manual for M915 Family of Vehicles

PAGE NO.	COLM NO.	LINE NO.	NATIONAL STOCK NUMBER	REFERENCE NO.	FIGURE NO.	ITEM NO.	TOTAL NO. OF MAJOR ITEMS SUPPORTED	RECOMMENDED ACTION

PART III – REMARKS (Any general remarks or recommendations, or suggestions for improvement of publications and blank forms. Additional blank sheets may be used if more space is needed.)

TYPED NAME, GRADE OR TITLE	TELEPHONE EXCHANGE/AUTOVON, PLUS EXTENSION	SIGNATURE

USAPPC V3.00

RECOMMENDED CHANGES TO PUBLICATIONS AND BLANK FORMS For use of this form, see AR 25-30; the proponent agency is ODISC4.	Use Part II (reverse) for Repair Parts and Special Tool Lists (RPSTL) and Supply Catalogs/Supply Manuals (SC/SM).	**DATE**
TO: (Forward to proponent of publication or form) (Include ZIP Code) U. S. Army TACOM Life Cycle Management Command ATTN: AMSTA-LCL-MPP/TECH PUBS 6501 E. 11 Mile Road, Warren, MI 48397-5000	**FROM: (Activity and location) (Include ZIP Code)**	

PUBLICATION/FORM NUMBER	DATE	TITLE
TM 9-2320-302-20-2	10 January 2011	Unit Maintenance Manual for M915 Family Of Vehicles

ITEM NO.	PAGE NO.	PARA-GRAPH	LINE NO. *	FIGURE NO.	TABLE NO.	RECOMMENDED CHANGES AND REASON (Provide exact wording of recommended changes, if possible).

**Reference to line numbers within the paragraph or subparagraph.*

TYPED NAME, GRADE OR TITLE	TELEPHONE EXCHANGE/AUTOVON, PLUS EXTENSION	SIGNATURE

DA FORM 2028, FEB 74 REPLACES DA FORM 2028, 1 DEC 68, WHICH WILL BE USED. USAPPC V3.00

TO: (Forward direct to addressee listed in publication)	FROM: (Activity and location) (Include ZIP Code)	DATE
U. S. Army TACOM Life Cycle Management Command ATTN: AMSTA-LCL-MPP/TECH PUBS 6501 E. 11 Mile Road, Warren, MI 48397-5000		

PART II – REPAIR PARTS AND SPECIAL TOOL LISTS AND SUPPLY CATALOGS/SUPPLY MANUALS

PUBLICATION NUMBER	DATE	TITLE
TM 9-2320-302-20-2	10 January 2011	Unit Maintenance Manual for M915 Family of Vehicles

PAGE NO.	COLM NO.	LINE NO.	NATIONAL STOCK NUMBER	REFERENCE NO.	FIGURE NO.	ITEM NO.	TOTAL NO. OF MAJOR ITEMS SUPPORTED	RECOMMENDED ACTION

PART III – REMARKS (*Any general remarks or recommendations, or suggestions for improvement of publications and blank forms. Additional blank sheets may be used if more space is needed.)*

TYPED NAME, GRADE OR TITLE	TELEPHONE EXCHANGE/AUTOVON, PLUS EXTENSION	SIGNATURE

USAPPC V3.00

RECOMMENDED CHANGES TO PUBLICATIONS AND BLANK FORMS For use of this form, see AR 25-30; the proponent agency is ODISC4.	Use Part II (reverse) for Repair Parts and Special Tool Lists (RPSTL) and Supply Catalogs/Supply Manuals (SC/SM).	**DATE**
TO: (Forward to proponent of publication or form) (Include ZIP Code) U. S. Army TACOM Life Cycle Management Command ATTN: AMSTA-LCL-MPP/TECH PUBS 6501 E. 11 Mile Road, Warren, MI 48397-5000	**FROM: (Activity and location) (Include ZIP Code)**	

PUBLICATION/FORM NUMBER	DATE	TITLE
TM 9-2320-302-20-2	10 January 2011	Unit Maintenance Manual for M915 Family of Vehicles

ITEM NO.	PAGE NO.	PARA-GRAPH	LINE NO. *	FIGURE NO.	TABLE NO.	RECOMMENDED CHANGES AND REASON (Provide exact wording of recommended changes, if possible).

**Reference to line numbers within the paragraph or subparagraph.*

TYPED NAME, GRADE OR TITLE	TELEPHONE EXCHANGE/AUTOVON, PLUS EXTENSION	SIGNATURE

DA FORM 2028, FEB 74 REPLACES DA FORM 2028, 1 DEC 68, WHICH WILL BE USED. USAPPC V3.00

TO: (Forward direct to addressee listed in publication)	FROM: (Activity and location) (Include ZIP Code)	DATE
U. S. Army TACOM Life Cycle Management Command ATTN: AMSTA-LCL-MPP/TECH PUBS 6501 E. 11 Mile Road, Warren, MI 48397-5000		

PART II – REPAIR PARTS AND SPECIAL TOOL LISTS AND SUPPLY CATALOGS/SUPPLY MANUALS

PUBLICATION NUMBER	DATE	TITLE
TM 9-2320-302-20-2	10 Janaury 2011	Unit Maintenance Manual for M915 Family Of Vehicles

PAGE NO.	COLM NO.	LINE NO.	NATIONAL STOCK NUMBER	REFERENCE NO.	FIGURE NO.	ITEM NO.	TOTAL NO. OF MAJOR ITEMS SUPPORTED	RECOMMENDED ACTION

PART III – REMARKS (*Any general remarks or recommendations, or suggestions for improvement of publications and blank forms. Additional blank sheets may be used if more space is needed.)*

TYPED NAME, GRADE OR TITLE	TELEPHONE EXCHANGE/AUTOVON, PLUS EXTENSION	SIGNATURE

USAPPC V3.00

THE METRIC SYSTEM AND EQUIVALENTS

Linear Measure

1 Centimeter = 10 Millimeters = 0.01 Meters = 0.3937 Inches
1 Meter = 100 Centimeters = 1000 Millimeters = 39.37 Inches
1 Kilometer = 1000 Meters = 0.621 Miles

Weights

1 Gram = 0.001 Kilograms = 1000 Milligrams = 0.035 Ounces
1 Kilogram = 1000 Grams = 2.2 Pounds
1 Metric Ton = 1000 Kilograms = 1 Megagram = 1.1 Short Tons

Liquid Measure

1 Milliliter = 0.001 Liters = 0.0338 Fluid Ounces
1 Liter = 1000 Milliliters = 33.82 Fluid Ounces

Square Measure

1 Sq Centimeter = 100 Sq Millimeters = 0.155 Sq Inches
1 Sq Meter = 10,000 Sq Centimeters = 10.76 Sq Feet
1 Sq Kilometer = 1,000,000 Sq Meters = 0.0386 Sq Miles

Cubic Measure

1 Cu Centimeter = 1,000 Cu Millimeters = 0.06 Cu Inches
1 Cu Meter = 1,000,000 Cu Centimeters = 35.31 Cu Feet

Temperature

5/9 (°F - 32) = °C
212° Fahrenheit is equivalent to 100° Celsius
90° Fahrenheit is equivalent to 32.2° Celsius
32° Fahrenheit is equivalent to 0° Celsius
9/5 C° +32 = F°

APPROXIMATE CONVERSION FACTORS

To Change	To	Multiply By
Inches	Centimeters	2.540
Feet	Meters	0.305
Yards	Meters	0.914
Miles	Kilometers	1.609
Sq Inches	Sq Centimeters	6.451
Sq Feet	Sq Meters	0.093
Sq Yards	Sq Meters	0.836
Sq Miles	Sq Kilometers	2.590
Acres	Sq Hectometers	0.405
Cubic Feet	Cubic Meters	0.028
Cubic Yards	Cubic Meters	0.765
Fluid Ounces	Milliliters	29.573
Pints	Liters	0.473
Quarts	Liters	0.946
Gallons	Liters	3.785
Ounces	Grams	28.349
Pounds	Kilograms	0.454
Short Tons	Metric Tons	0.907
Pound-Feet	Newton-Meters	1.356
Pounds per Sq Inch	Kilopascals	6.895
Miles per Gallon	Kilometers per Liter	0.425
Miles per Hour	Kilometers per Hour	1.609

To Change	To	Multiply By
Centimeters	Inches	0.394
Meters	Feet	3.280
Meters	Yards	1.094
Kilometers	Miles	0.621
Sq Centimeters	Sq Inches	0.155
Sq Meters	Sq Feet	10.764
Sq Meters	Sq Yards	1.196
Sq Kilometers	Sq Miles	0.386
Sq Hectometers	Acres	2.471
Cubic Meters	Cubic Feet	35.315
Cubic Meters	Cubic Yards	1.308
Milliliters	Fluid Ounces	0.034
Liters	Pints	2.113
Liters	Quarts	1.057
Liters	Gallons	0.264
Grams	Ounces	0.035
Kilograms	Pounds	2.205
Metric Tons	Short Tons	1.102
Newton-Meters	Pound-Feet	0.738
Kilopascals	Pounds per Sq Inch	0.145
Kilometers per Liter	Miles per Gallon	2.354
Kilometers per Hour	Miles per Hour	0.621

PIN: 081366-000

This fine document...

Was brought to you by me:

Liberated Manuals -- free army and government manuals

Why do I do it? I am tired of sleazy CD-ROM sellers, who take publicly available information, slap “watermarks” and other junk on it, and sell it. Those masters of search engine manipulation make sure that their sites that sell free information, come up first in search engines. They did not create it... They did not even scan it... Why should they get your money? Why are not letting you give those free manuals to your friends?

I am setting this document FREE. This document was made by the US Government and is NOT protected by Copyright. Feel free to share, republish, sell and so on.

I am not asking you for donations, fees or handouts. If you can, please provide a link to liberatedmanuals.com, so that free manuals come up first in search engines:

<A HREF=http://www.liberatedmanuals.com/>Free Military and Government Manuals</A>

- Sincerely
  Igor Chudov
  http://igor.chudov.com/
- Chicago Machinery Movers