TECHNICAL MANUAL

OPERATOR, UNIT, AND DIRECT SUPPORT MAINTENANCE MANUAL (INCLUDING REPAIR PARTS AND SPECIAL TOOLS LIST)

POWER UNIT, DIESEL ENGINE DRIVEN, 2 1/2 TON TRAILER MOUNTED, 15 kW, 400 Hz, PU-800 (NSN 61 15-01-317-2137)

POWER UNIT, DIESEL ENGINE DRIVEN, 1 TON TRAILER MOUNTED, 15 kW, 50/60 Hz, PU-801 (NSN 61 15-01-319-9033)

POWER UNIT, DIESEL ENGINE DRIVEN, 2 1/2 TON TRAILER MOUNTED, 15 kW, 50/60 Hz, PU-802 (NSN 6115-01-317-2138)

POWER PLANT, DIESEL ENGINE DRIVEN, 2 1/2 TON TRAILER MOUNTED, 15 kW,400 Hz, AN/MJQ-39 (NSN 6115-01-299-6034)

This copy is a reprint which includes current pages from Change 1 and 2.

HEADQUARTERS, DEPARTMENT OF THE ARMY
15 OCTOBER 1993

NOTE

The warnings in the generator set technical manuals and the trailer technical manuals must also be considered.

WARNING

Dry cleaning solvent used to clean parts is potentially dangerous to personnel and property. Clean parts in a well-ventilated area. Avoid inhalation of solvent fumes. Wear goggles and rubber gloves to protect eyes and skin. Wash exposed skin thoroughly. Do not smoke or use near open flame or excessive heat. Failure to observe this warning could result in severe personal injury or death.

WARNING

Before removing trailer leveling-support jack, support rear of trailer. Failure to observe this warning could result in severe personal injury or death.

WARNING

Before performing any maintenance that requires climbing on or under trailer, make sure that trailer handbrakes are set and front and rear trailer support legs are lowered. Failure to observe this warning could result in severe personal injury or death.

WARNING

Hot refueling of generators while they are operating poses a safety hazard and should not be attempted. Hot engine surfaces and sparks produced by the engine and generator circuitry are possible sources of ignition. Failure to observe this warning could result in severe personal injury or death.

WARNING

The fuels in this generator set are highly explosive. Do not smoke or use open flames when performing maintenance. Failure to observe this warning could result in severe personal injury or death.

WARNING

Never attempt to start generator set if it is not properly grounded. Failure to observe this warning could result in severe personal injury or death by electrocution.

Make sure generator sets are shut down before performing any maintenance. Failure to observe this warning could result in severe personal injury or death.

WARNING

When lifting generator set, use lifting equipment with a minimum lifting capacity of 6000 lb. Do not stand under generator set while it is being lifted. Do not permit generator set to swing. Failure to observe this warning could result in severe personal injury or death.

Trailer brakes must be set and trailer front landing leg/support leg must be down before disconnecting trailer from towing vehicle. Failure to observe this warning could allow the trailer to up-end or roll and could result in severe personal injury or death.

Refer to FM 21-11 for first aid.

CHANGE

NO. 4

HEADQUARTERS
DEPARTMENT OF THE ARMY
WASHINGTON, D.C., 9 OCTOBER 1996

OPERATOR, UNIT, AND DIRECT SUPPORT MAINTENANCE MANUAL
(INCLUDING REPAIR PARTS AND SPECIAL TOOLS LIST)

POWER UNIT, DIESEL ENGINE DRIVEN, 2 1/2 TON TRAILER MOUNTED,
15 kW, 400 Hz, PU-800 (NSN 6115-01-317-2137)

POWER UNIT, DIESEL ENGINE DRIVEN, 1 TON TRAILER MOUNTED,
15 kW, 50/60 Hz, PU-801 (NSN 6115-01-319-9033)

POWER UNIT, DIESEL ENGINE DRIVEN, HIGH MOBILITY TRAILER MOUNTED,
15 kW, 50/60 Hz, PU-801A (NSN 6115-01-413-3821)

POWER UNIT, DIESEL ENGINE DRIVEN, 2 1/2 TON TRAILER MOUNTED,
15 kW, 50/60 Hz, PU-802 (NSN 6115-01-317-2138)

POWER PLANT, DIESEL ENGINE DRIVEN, 2 1/2 TON TRAILER MOUNTED,
15 kW, 400 Hz, AN/MJQ-39 (NSN 6115-01-299-6034)

DISTRIBUTION STATEMENT A. Approved for public release, distribution is unlimited

TM 9-6115-661-13&P, 15 October 1993, is changed as follows:

1. Remove and insert pages as indicated below New or changed text material is indicated by a vertical bar in the margin. An illustration change is indicated by a miniature pointing hand.

Remove pages	Insert pages
F-21-1 and Figure 22	F-21-1 and Figure 22
1-5 and I-6	I-5 and 1-6

2. Retain this sheet in front of manual for reference purposes.

By Order of the Secretary of the Army:

DENNIS J. REIMER
General, United States Army
Chief of Staff

Official

JOEL B. HUDSON
Administrative Assistant to the
Secretary of the Army
03161

DISTRIBUTION: To be distributed in accordance with DA Form 12-25-E, block no. 6177, requirements for TM 9-6115-661-13&P.

CHANGE

No. 3

HEADQUARTERS
DEPARTMENT OF THE ARMY
WASHINGTON, D. C.,15 AUGUST 1995

Operator, Unit, and Direct Support Maintenance Manual
(Including Repair Parts and Special Tools List)

Power Unit, Diesel Engine Driven, 2 1/2 Ton Trailer Mounted,
15 kW, 400 Hz, PU-800 (NSN 6115-01-317-2137)

Power Unit, Diesel Engine Driven, 1 Ton Trailer Mounted,
15 kW, 50/60 Hz, PU-801 (NSN 6115-01-319-9033)

Power Unit, Diesel Engine Driven, High Mobility Trailer Mounted,
15 kW, 50/60 Hz, PU-801A (NSN 6115-01-413-3821)

Power Unit, Diesel Engine Driven, 2 1/2 Ton Trailer Mounted,
15 kW, 50/60 Hz, PU-802 (NSN 6115-01-317-2138)

Power Unit, Diesel Engine Driven, 1 Ton Trailer Mounted,
15 kW, 400 Hz, AN/MJQ-39 (NSN 6115-01-299-6034)

DISTRIBUTION STATEMENT A: Approved for public release; distribution is unlimited.

TM 9-6115-661-13&P, 15 OCTOBER 1993, is changed as follows:

1. Title is changed as shown above.

2. Remove and insert pages as indicated below. New or changed text material is indicated by a vertical bar in the margin. An illustration change is indicated by a miniature pointing hand.

Remove pages	Insert pages
i through viii	i through viii
xiii and xiv	xiii and xiv
1-1 through 1-9(1-10 Blank)	1-1 through 1-9/(1 -10 Blank)
2-1 and 2-2	2-1 and 2-2
2-9 through 2-38	2-9 through 2-38
2-45 through 2-48	2-45 through 2-48
2-51 through 2-54	2-51 through 2-54
3-1 through 3-4	3-1 through 3-4
4-1 through 4-4	4-1 through 4-4
4-6.1 and 4-6.2	4-6.1 and 4-6.2
4-7 through 4-12	4-7 through 4-12
4-23 and 4-24	4-23 and 4-24
4-33 and 4-34	4-33 and 4-34
4-51 through 4-53/(4-54 Blank)	4-51 through 4-54
5-1 through 5-4	5-1 through 5-4
5-13 and 5-14	5-13 and 5-14
—	5-14.1/(5-14.2 Blank)
5-33/(5-34 Blank)	5-33 through 5-40
A-1 through A-3/(A-4 Blank)	A-1 through A-3/(A-4 Blank)
B-3 through B-7/(B-8 Blank)	B-3 through B-7/(B-8 Blank)

Remove pages	Insert pages
C-1 through C-3/(C-4 Blank)	C-1 through C-3/(C-4 Blank)
D-1/(D-2 Blank)	D-1/(D-2 Blank)
E-1 and E-2	E-1 and E-2
F-1 and F-2	F-1 and F-2
F-7 and F-8	F-7 and F-8
Figure F-1	Figure F-1
F-1-1 and Figure F-2	F-1-1 and Figure F-2
F-19-1 and Figure F-20	F-19-1
----	Figure F-20, Sheets 1 and 2
F-20-1 and Figure F-21	F-20-1 and Figure F-21
F-21-1 and Figure F-22	F-21-1 and Figure F-22
F-22-1 and Figure F-23	F-22-1 and Figure F-23
F-23-1 and Figure F-24	F-23-1 and Figure F-24
F-24-1 and Figure F-25	F-24-1 and Figure F-25
F-29-1 and Figure F-30	F-29-1 and Figure F-29A
----	F-29A-1
----	Figure F-29B, Sheets 1 and 2
----	F-29B-1 and F-29B-2
----	Figure F-30
F-30-1 and Figure F-31	F-30-1 and Figure F-31
F-31-1 and figure F-32	F-31-1 and Figure F-32
F-32-1 and Figure F-33	F-32-1 and Figure F-33
F-33-1 and Bulk-1	F-33-1 and Bulk-1
I-1 and I-2	I-1 and I-2
----	1-2.1/(1-2.2 Blank)
I-3 through I-10	I-3 through I-10
----	1-10.1/(1-10.2 Blank)
1-11 and I-12	1-11 and I-12
I-15 through 1-18	I-15 through I-19/(I-20 Blank)
----	Appendix I
Glossary 1 and Glossary 2	Glossary 1 and Glossary 2
Index 1 through Index 5/(Index 6 Blank)	Index 1 through Index 5/(lndex 6 Blank)

3. Retain this sheet in front of manual for reference purposes.

By Order of the Secretary of the Army:

DENNIS J. REIMER
General, United States Army
Chief of Staff

Official:

JOEL B. HUDSON
Acting Administrative Assistant to the
Secretary of the Army
00793

DISTRIBUTION:

To be distributed in accordance with DA Form 12-25-E, block no. 6177, requirements for TM 9-6115-661-13&P.

URGENT

TM 9-6115-661-13&P
C 2

CHANGE

NO. 2

HEADQUARTERS
DEPARTMENT OF THE ARMY
WASHINGTON, D.C., 30 September 1994

OPERATOR, UNIT, AND DIRECT SUPPORT MAINTENANCE MANUAL
(INCLUDING REPAIR PARTS AND SPECIAL TOOLS LIST)

POWER UNIT, DIESEL ENGINE DRIVEN, 2 1/2 TON TRAILER MOUNTED, 15 kW, 400 Hz PU-800 (NSN 6115-01-317-2137)
POWER UNIT, DIESEL ENGINE DRIVEN 1 TON TRAILER MOUNTED, 15 kW, 50/60 Hz, PU-801 (NSN 6115-01-317-9033)
POWER PLANT, DIESEL ENGINE DRIVEN, 2 1/2 TON TRAILER MOUNTED, 15 kW, 50/60 Hz, PU-802 (NSN 6115-01-317-2138)
POWER PLANT, DIESEL ENGINE DRIVEN, 2 1/2 TON TRAILER MOUNTED, 15 kW, 400 Hz, AN/MJQ-39 (NSN 6115-01-299-6034)

DISTRIBUTION STATEMENT A: Approved for public release; distribution is unlimited

TM 9-6115-661-13&P, 15 October 1993, is changed as follows:

1. Remove and insert pages as indicated below. New or changed text material is indicated by a vertical bar in the margin. An illustration change is indicated by a miniature pointing hand.

Remove pages	Insert pages
---	4-6.1 and 4-6.2
4-7 and 4-8	4-7 and 4-8

2. Retain this sheet in front of manual for reference purposes.

By Order of the Secretary of the Army:

GORDON R. SULLIVAN
General, United States Army
Chief of Staff

Official:

MILTON H. HAMILTON
Administrative Assistant to the
Secretary of the Army
06757

DISTRIBUTION:

To be distributed in accordance with DA Form 12-25-E, block no. 6177, requirements for TM 9-6115-661-13&P.

CHANGE

NO. 1

HEADQUARTERS
DEPARTMENT OF THE ARMY
WASHINGTON, D.C., 15 NOVEMBER 1993

OPERATOR, UNIT, AND DIRECT SUPPORT MAINTENANCE MANUAL
(INCLUDING REPAIR PARTS AND SPECIAL TOOLS LIST)

POWER UNIT, DIESEL ENGINE DRIVEN, 2 1/2 TON TRAILER MOUNTED,
15 kW, 400 Hz, PU-800 (NSN 6115-01-317-2137)

POWER UNIT, DIESEL ENGINE DRIVEN, 1 TON TRAILER MOUNTED,
15 kW, 50/60 Hz, PU-801 (NSN 6115-01-319-9033)

POWER UNIT, DIESEL ENGINE DRIVEN, 2 1/2 TON TRAILER MOUNTED,
15 kW, 50/60 Hz, PU-802 (NSN 6115-01-317-2138)

POWER PLANT, DIESEL ENGINE DRIVEN, 2 1/2 TON TRAILER MOUNTED,
15 kW, 400 Hz, AN/MJQ-39 (NSN 6115-01-299-6034)

DISTRIBUTION STATEMENT A: Approved for public release; distribution is unlimited.

TM 9-6115-661-13&P, 15 October 1993, is changed as follows:

1. Remove and insert pages as indicated below. New or changed text material is indicated by a vertical bar in the margin. An illustration change is indicated by a miniature pointing hand.

Remove pages	Insert pages
----	Appendix F

2. Retain this sheet in front of manual for reference purposes.

By Order of the Secretary of the Army:

GORDON R. SULLIVAN
General, United States Army
Chief of Staff

Official:

MILTON H. HAMILTON
Administrative Assistant to the
Secretary of the Army
05774

DISTRIBUTION:
To be distributed in accordance with DA Form 12-25-E, block no. 6177, requirements for TM 9-6115-661-13&P.

TECHNICAL MANUAL

NO. 9-6115-661-13&P

HEADQUARTERS
DEPARTMENT OF THE ARMY
WASHINGTON, D. C.,15 OCTOBER 1993

OPERATOR, UNIT, AND DIRECT SUPPORT MAINTENANCE MANUAL (INCLUDING REPAIR PARTS AND SPECIAL TOOLS LIST)

POWER UNIT, DIESEL ENGINE DRIVEN, 2 1/2 TON TRAILER MOUNTED, 15 kW, 400 Hz, PU-800 (NSN 6115-01-317-2137)

POWER UNIT, DIESEL ENGINE DRIVEN, 1 TON TRAILER MOUNTED, 15 kW, 50/60 Hz, PU-801 (NSN 6115-01-319-9033)

POWER UNIT, DIESEL ENGINE DRIVEN, HIGH MOBILITY TRAILER MOUNTED, 15 kW, 50/60 Hz, PU-801A (NSN 6115-01-413-3821)

POWER UNIT, DIESEL ENGINE DRIVEN, 2 1/2 TON TRAILER MOUNTED, 15 kW, 50/60 Hz, PU-802 (NSN 6115-01-31 7-2138)

POWER PLANT, DIESEL ENGINE DRIVEN, 2 1/2 TON TRAILER MOUNTED, 15 kW, 400 Hz, AN/MJQ-39 (NSN 6115-01-299-6034)

REPORTING ERRORS AND RECOMMENDING IMPROVEMENTS

You can help improve this manual. If you find any mistakes, or if you know of a way to improve the procedures, please let us know. Mail your letter, DA Form 2028 (Recommended Changes to Publications and Blank Forms), or DA Form 2028-2 located in the back of this manual direct to: Commander, U.S. Army Aviation and Troop Command, ATTN: AMSAT-I-MP, 4300 Goodfellow Boulevard, St. Louis, MO 63120-1798. A reply will be furnished to you.

TABLE OF CONTENTS

TABLE OF CONTENTS - continued

TABLE OF CONTENTS - continued

TABLE OF CONTENTS - continued

LIST OF ILLUSTRATIONS

LIST OF ILLUSTRATIONS - continued

LIST OF TABLES

HOW TO USE THIS MANUAL

DESCRIPTION OF THE MANUAL.

Manual Organization. This manual is designed to help you operate and maintain the Power Unit PU-800, Power Unit PU-801, Power Unit PU-801A Power Unit PU-802 and Power Plant, AN/MJQ-39. Warning pages are located in the front of this manual. Read the warnings before operating or doing maintenance on the equipment.

The major elements of this manual are its chapters and appendices. Each chapter has one or more sections, The Table of Contents, beginning on page i, is provided for quick reference to the subjects covered by each chapter, section, and appendix. Each chapter also has a chapter index. The chapter index lists the chapter sections and paragraphs. Appendix F also has a table of contents to help you locate the items listed in that appendix.

The front cover of this manual has an index that lists the most important areas of the manual. Each item indexed on the front cover has a black box at the edge of the cover. There is a corresponding black box on the first text page for each subject listed on the cover index.

A glossary follows the last appendix. The glossary lists and explains the special or unique abbreviations and the unusual terms used in this manual.

An alphabetical index follows the glossary. That index is for use in locating specific items of information.

Chapters. This manual has five chapters and eight appendices. Each chapter is divided into sections. Each section is divided into descriptive paragraphs. The paragraphs have specific information about the power units and power plant and their major components.

Paragraph Numbering. All paragraphs are numbered. This helps you find what you need when you need it. USE THE TABLE OF CONTENTS OR ALPHABETICAL INDEX TO FIND THE SECTION OR PARAGRAPH YOU NEED. Some paragraphs have a related illustration, to show the items discussed in the paragraph. Also, some paragraphs have a related table that provides a detailed list of items introduced by the paragraph. Each primary paragraph, illustration, and table is identified by the number of the chapter in which it appears, followed by a dash and another number. The number after the dash indicates the sequence in which the paragraph, illustration, or table appears in the chapter. Some paragraphs are further divided into subparagraphs. Subparagraphs are identified by the number of the primary paragraph followed by a decimal number, as follows:

Examples: 4-5. is the fifth paragraph in chapter 4.
4-5.1 is the first subparagraph of paragraph 4-5.
4-5.2 is the second subparagraph of paragraph 4-5.
4-5.2.1 is the first subparagraph under 4-5.2.
Figure 3-3. is the third illustration in chapter 3.
Table 2-1. is the first table in chapter 2.

Appendices. Each appendix covers a specific subject; sometimes general, such as the list of references in Appendix A; or sometimes very detailed, such as the repair parts and special tools list in Appendix F.

CHAPTER 1 - INTRODUCTION.

Chapter 1 provides an introduction to the power units and power plant. It is divided into three sections, as follows:

Section I - General Information. This section provides general information about this manual and the related forms and records. Instructions are provided for making equipment improvement recommendations. Coverage includes a reference to the TM that contains instructions on destruction of materiel to prevent enemy use. Also, a nomenclature cross-reference list is provided.

Section II - Equipment Description. This section describes power unit and power plant capabilities, characteristics, and features. It provides basic equipment data and shows the locations of major power unit and power plant components. Descriptions of the major components are also provided.

Section III - Principles of Operation. This section provides functional descriptions of the power units and power plants.

CHAPTER 2- OPERATING INSTRUCTIONS.

Chapter 2 provides instructions for operating the power units and power plants. The chapter is divided into four sections, as follows:

Section I - Description and Use of Operator's Controls and Indicators. This section provides references to the applicable generator set technical manuals and trailer technical manuals. Those references contain information on operator's controls and indicators for the generator sets and trailers. Detailed coverage is provided for the power plant switch box controls and indicators.

Section II - Operator Preventive Maintenance Checks and Services (PMCS). This section contains detailed instructions for the before, during, and after operation preventive maintenance checks and services that the operator must perform. Coverage includes all operator PMCS for the generator sets and trailers that make up the power units and power plants. Operator PMCS for the switch box used on the power plants is also covered.

Section III - Operation Under Usual Conditions. This section contains instructions for preparing the power units and power plants for use and operating them under normal conditions. Coverage includes instructions for connecting power plant load to the switch box and operating the switch box. Instructions for connecting power unit load to the generator set are also covered. This section also covers preparation of the power unit or power plant for movement to a new worksite.

Section IV - Operation Under Unusual Conditions. This section provides references to the applicable generator set and trailer technical manuals.

CHAPTER 3- OPERATOR MAINTENANCE.

Chapter 3 covers maintenance of the power units and power plant that is to be performed by the operator. Its purpose is to provide you with the information you need to keep the equipment in good operating condition. The chapter is divided into three sections, as follows:

Section I - Operator Lubrication. This section provides references to the applicable lubrication instructions.

Section II - Troubleshooting. This section provides references to the applicable generator set and trailer technical manuals.

Section III - Maintenance Procedures. This section refers the operator to the preventive maintenance checks and services required by section II of chapter 2.

CHAPTER 4 - UNIT MAINTENANCE.

Chapter 4 provides instructions covering the power unit and power plant maintenance that must be performed at unit level. The chapter is divided into eight sections, as follows:

Section I - Repair Parts; Special Tools: Test. Measurement, and Diagnostic Equipment (TMDE); and Support Equipment. This section lists references that contain the required information.

Section II - Service Upon Receipt. This section contains instructions for inspecting and servicing each power unit and power plant when it is received. It includes instructions for unpacking the equipment when it is received. The instructions include unpacking and stowing the basic issue items that accompany the power unit or power plant. Also included are instructions on positioning the power unit or power plant for operation end connecting an external fuel source.

Section III - Unit Lubrication. This section lists the applicable references that contain lubrication instructions for the generator sets and trailers. It also contains specific lubrication instructions for the power units or power plant components not covered in the generator set or trailer references.

Section IV - Unit Preventive Maintenance Checks and Services (PMCS). This section contains instructions covering the PMCS that must be performed at the unit maintenance level. A table provides information on maintenance intervals and actions required.

Section V - Troubleshooting. This section covers troubleshooting procedures and corrective actions that are to be performed at the unit maintenance level.

Section VI - Maintenance Procedures. This section lists the applicable references that cover unit maintenance of the generator sets and trailers. It also contains detailed instructions on unit level maintenance of the power unit and power plant components that are not covered in the generator set and trailer references.

Section VII - Administrative Storage. This section provides information on short term, intermediate term, and long term storage.

CHAPTER 5 - DIRECT SUPPORT MAINTENANCE INSTRUCTIONS.

Chapter 5 provides instructions for the maintenance actions designated to be performed at the direct support maintenance level. The chapter is divided into three sections, as follows:

Section I - Repair Parts; Special Tools; Test, Measurement, and Diagnostic Equipment; and Support Equipment. This section lists the documents that contain the needed information.

Section II - Troubleshooting. This section includes instructions for troubleshooting faults in the opration of the generator switch box assenbly. It includes eight go-no-go flowcharts for eight possible switch box malfunctions.

Section III - Maintenance Procedures. This section lists the references that contain direct support maintenance instructions for the generator sets and trailers. In addition, it contains detailed instructions for direct support maintenance of power unit and power plant components not covered in the generator set and trailer references.

APPENDICES.

Appendix A - References. This appendix lists all publications that are referenced in the various chapters of the technical manual. The listing includes the title of each publication.

Appendix B - Maintenance Allocation Chart. This appendix has four sections, as follows:

Section I - Introduction. This section explains what is covered in the maintenance allocation chart.

Section II - Maintenance Allocation Chart. This section contains a tabular listing that assigns maintenance functions to specific maintenance levels. It lists the work time needed to perform each maintenance function at the assigned level. It also contains a column that has entries keyed to the tools and equipment listed in section III. Another column has entries keyed to the remarks in section IV.

Section III - Tool and Test Equipment Requirements. This section contains complete identification information for the items referenced in the tools and equipment column of section II.

Section IV - Remarks. This section provides information for each entry in the remarks column of section II.

Appendix C - Components of End Item (COEI) and Basic Issue Items (BII) Lists. This appendix lists the items that are usually packaged separately but needed for installation and operation of the power unit and power plant. The appendix has three sections, as follows:

Section I - Introduction. This section explains what is covered in section II and section III.

Section II - Components of End Item. The power units and power plant are normally shipped fully assembled, so this section is not applicable.

Section III - Basic Issue Items. This section contains a list of the accessories needed for installation and operation of the power units and power plant.

Appendix D - Additional Authorization List (AAL) This appendix lists additional items you are authorized for support of the power unit/power plant.

Appendix E - Expendable and Durable Items List. This appendix lists expendable/durable supplies and materials needed to operate and maintain the power units and power plant. The appendix contains two sections, as follows:

Section I - Introduction. This section explains the entries in section II.

Section II - Expendable and Durable Supplies and Materials List. The list indicates the maintenance level that needs each item and identifies the items by National Stock Number, description, and unit of measure.

Appendix F - Unit and Direct Support Maintenance Repair Parts and Special Tools List. This appendix lists and authorizes the repair parts and special tools needed to perform unit, direct support, and general support maintenance of the power units and power plant. It contains four sections, as follows:

Section I - Introduction. This section explains what is covered in sections II, III, and IV.

Section II - Repair Parts List. This section contains illustrations and lists, The illustrations aid in identification of the parts. The lists include information that tells which maintenance levels are

authorized to use the part, the part number that identifies the part, the name of the part, and the quantity used.

Section III - Special Tools List. This section informs the user that no special tools are needed.

Section IV - Cross-Reference Indexes. This section contains two indexes, a national stock number index and a part number index. Each index lists all of the parts contained in section II. The national stock number index is in National Item Identification Number (NIIN) sequence. The part number index is in alphanumeric part number sequence.

Appendix G - Illustrated List of Manufactured Items. This appendix provides instructions for making the items authorized to be manufactured or fabricated at the unit maintenance level and direct support maintenance level.

Appendix H - Torque Limits. This appendix lists standard torque values for bolts and screws used in the power units and power plant.

Glossary. This Glossary has two sections, as follows:

Section I - Abbreviations. This section lists the special or unique abbreviations used in this technical manual, Special or unique abbreviations are those not listed in MIL-STD-12D.

Section II - Definition of Unusual Terms. This section lists and defines the terms used in this technical manual that are not listed in Army Regulation (AR 310-25).

INDEX.

An alphabetical index at the back of this technical manual provides a listing of subjects covered, cross-referenced to the applicable paragraph.

HOW TO FIX A POWER UNIT OR POWER PLANT MALFUNCTION.

Determining the Cause. Finding the cause of a malfunction, troubleshooting, is the first step in fining the power unit or power plant and returning it to operation. Follow these simple steps to determine the root of the problem:

a. Turn to the Table of Contents in this manual (page i).

b. Locate “Troubleshooting” under the chapter that covers your level of maintenance. Turn to the page indicated.

c. For operator troubleshooting, follow the instructions in the references listed in Chapter 3.

d. For troubleshooting at the unit maintenance level, find the malfunction listing in the troubleshooting symptom index. Follow the instructions in the figure (troubleshooting chart) indicated by the symptom index.

Preparing for a Task. Be sure that you understand the entire maintenance procedure before beginning any maintenance task. Make sure that all parts, materials, and tools are handy. Read all steps before beginning. Prepare to do the task as follows:

a. Carefully read the entire task before starting. It tells you what you will need and what you have to know to start the task. DO NOT START THE TASK UNTIL:

(1) You know what is needed

(2) You have everything you need

(3) You understand what to do

b. If parts are listed, they can be drawn from technical supply. Before you start the task, check to make sure you can get the needed parts. National stock numbers (NSNs) and part numbers for generator set parts are listed in the generator Repair Parts and Special Tools List (RPSTL) manual, TM 9-6115-643-24P, and the engine RPSTL manual, TM 9-2815-254-24P. NSNS and part numbers for the 1-ton trailer chassis parts are listed in TM 9-2330-202-14&P. NSNS and part numbers for the high mobility trailer chassis parts are listed in TM 9-2330-392-14&P. NSNS and part numbers for the 2 l/2-ton trailer chassis parts are listed in TM 9-2330-205-14&P. NSNS and part numbers for the next higher assembly (the power unit or power plant, less generator set(s) and trailer chassis) are listed in Appendix F.

c. If expendable/durable supplies or materials are needed, get them before starting the task. Refer to Appendix E for the correct nomenclature and NSN.

How to do the Task. Before starting, read the entire task. Be sure that you understand the entire procedure before you begin the task. As you read, remember the following:

a. PAY ATTENTION TO WARNINGS, CAUTIONS, AND NOTES.

b. Use the GLOSSARY if you do not understand the special abbreviations or unusual terms used in this manual.

c. The following are standard maintenance practices. Instructions about these practices are usually not included in task steps. When standard maintenance practices do not apply, the task steps will tell you. The standard maintenance practices are:

(1) Tag electrical wiring before disconnecting it.

(2) Discard used preformed packing, retainers, gaskets, cotter pins, lock washers, and similar items. Install new parts to replace the discarded items.

(3) Coat packing before installation, in accordance with the task instructions.

(4) Disassembly procedures describe the disassembly needed for total authorized repair. You may not need to disassemble an item as far as described in the task. Follow the disassembly steps only as far as needed to repair/replace worn or damaged parts.

(5) Clean the assembly, subassembly, or part before inspecting it.

(6) Before installing components having mating surfaces, inspect the mating surfaces to make sure they are in serviceable condition.

(7) Hold the bolt (or screw) head with a wrench (or screwdriver) while tightening or loosening a nut on the bolt (or screw).

(8) Torque to the special torque cited when the task instructions include the words "torque to." Use standard torques at all other times.

(9) When a cotter pin is required, align the cotter pin holes within the allowable torque range.

(10) Inspect for foreign objects after performing maintenance.

CHAPTER 1

INTRODUCTION

Subject Index Page

Section 1. GENERAL INFORMATION

1-1 SCOPE.

This manual is for your use in operating and maintaining the Power Unit PU-800, Power Unit PU-801, Power Unit PU-801A, Power Unit PU-802, and Power Plant AN/MJQ-39 (figure 1-1 through figure 1-3). The manual covers operating instructions and operator, unit and direct support maintenance requirements for the equipment. It also contains a Repair Parts and Special Tools List (RPSTL) for the power units and power plant. The Power Units PU-801, PU-801A and PU-802 are mobile units used to supply 15 kW of 50/60 Hz power. The PU-800 is a mobile unit used to supply 15 kW of 400 Hz power. Power plant AN/MJQ-39 consists of two PU-800 Power Units, a switch box, and power cable.

1-2 MAINTENANCE FORMS AND RECORDS.

Department of the Army forms and procedures used for equipment maintenance will be those prescribed by DA Pam 738-750 (The Army Maintenance Management System (TAMMS) Maintenance Management UPDATE).

1-3 DESTRUCTION OF ARMY MATERIEL TO PREVENT ENEMY USE.

Destruction of Army materiel to prevent enemy use shall be in accordance with TM 750-244-3.

1-4 PREPARATION FOR STORAGE AND SHIPMENT.

Refer to chapter 4, section VII for detailed instructions.

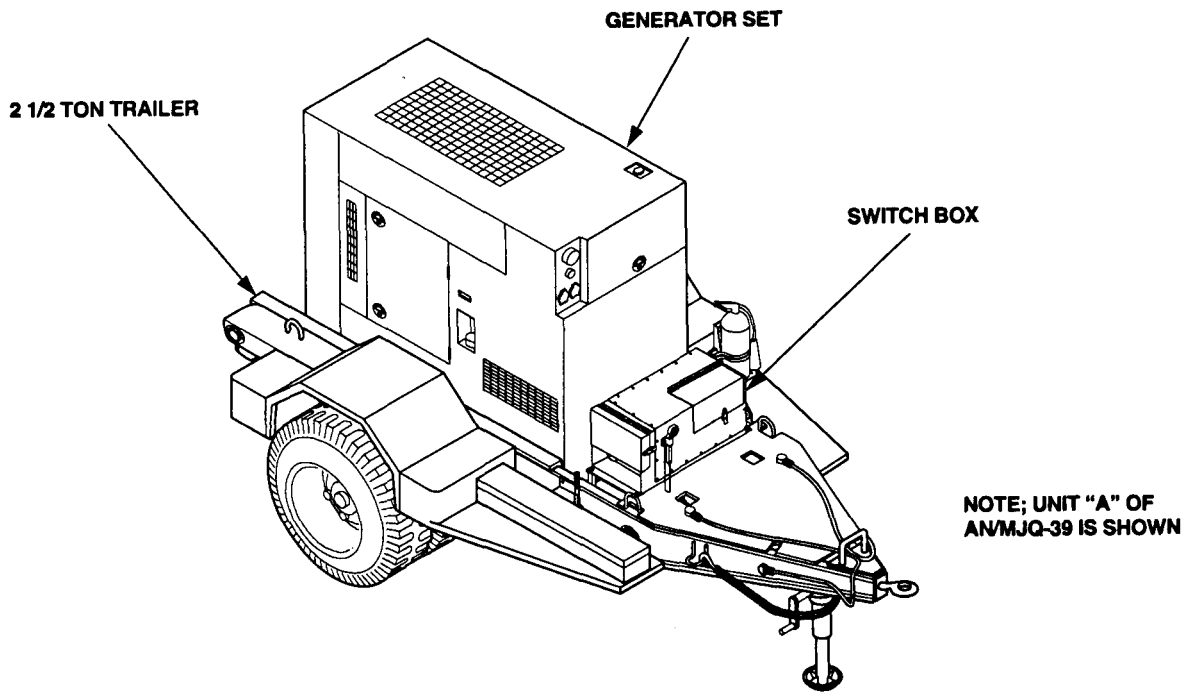

Figure 1-1. Curbside Front Three Quarter View.

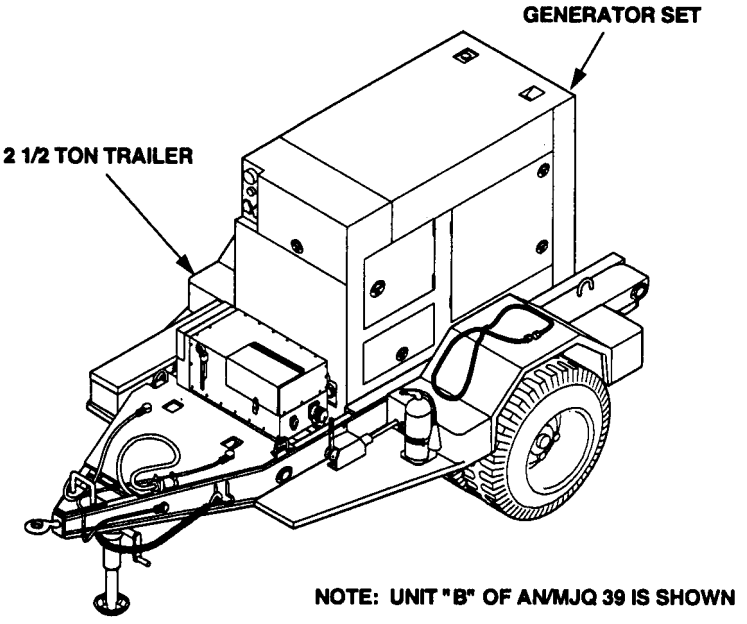

Figure 1-2. Roadside Front Three Quarter View.

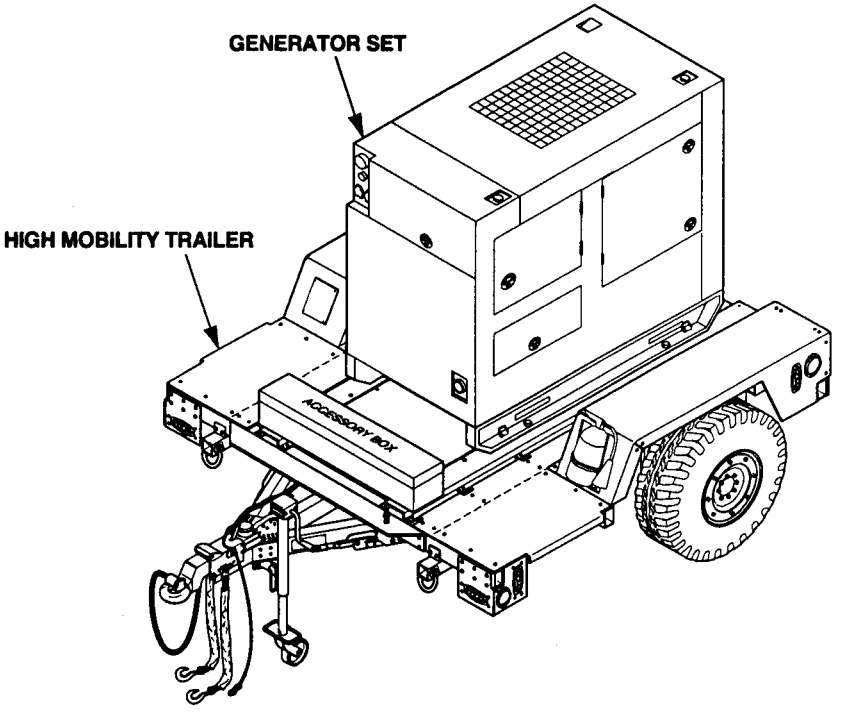

Figure 1-2.1. PU-801A Roadside Front three Quarter View.

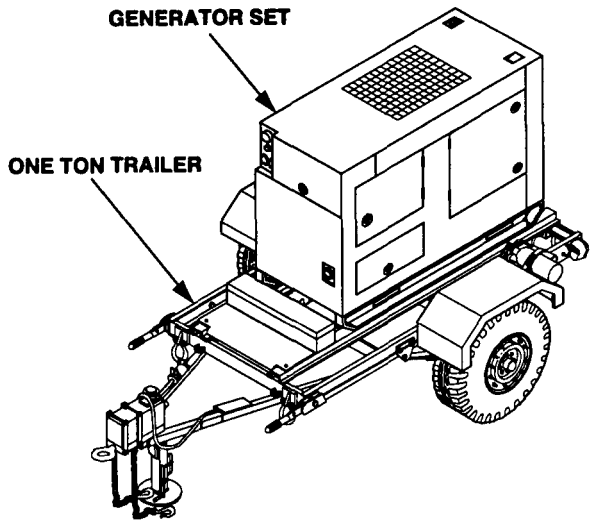

Figure 1-3. PU-801 Three Quarter View.

1-5 EQUIPMENT IMPROVEMENT RECOMMENDATION (EIR).

If your PU-800, PU-801, PU-801A, PU-802, or AN/MJQ-39 needs improvement, let us know. Send us an EIR. You, the user, are the only one who can tell us what you don't like about your equipment. Let us know why you don't like the design or performance. Put it on SF 368 (Product Quality Deficiency Report). Mail it to us at Commander, U.S. Army Aviation and Troop Command, ATTN: AMSAT-I-MDO, 4300 Goodfellow Boulevard, St. Louis, MO 63120-1798. We will send you a reply.

1-6 NOMENCLATURE CROSS-REFERENCE LIST.

The common name of each equipment is listed with its official nomenclature in Table 1-1.

Table 1-1. Nomenclature Cross-Reference List.

Common Name	Official Nomenclature
PU-800	Power Unit, Diesel Engine Driven, 2 1/2 Ton Trailer Mounted, 15 kW, 400 Hz
PU-801	Power Unit, Diesel Engine Driven, 1 Ton Trailer Mounted, 15 kW, 50/60 Hz
PU-801A	Power Unit, Diesel Engine Driven, High Mobility Trailer Mounted, 15 kW, 50/60 Hz
PU-802	Power Unit, Diesel Engine Driven, 2 1/2 Ton Trailer Mounted, 15 kW, 50/60 Hz
AN/MJQ-39	Power Plant, Diesel Engine Driven, 2 1/2 Ton Trailer Mounted, 15 kW, 400 Hz
MEP-804A	Generator Set, 15 kW, 50/60 Hz
MEP-814A	Generator Set, 15 kW, 400 Hz
M200A1	Chassis, Trailer: 2 1/2 Ton, 4 Wheel, (altered)
M116A3	Chassis, Trailer: 1 Ton, 2 Wheel, (altered)
HMT	Chassis, Trailer: High Mobility, 2 Wheel, (altered)

1-7 LIST OF ABBREVIATIONS/ACRONYMS.

Refer to the glossary at the back of this manual.

1-8 GLOSSARY.

Refer to the glossary at the back of this manual.

Section II. EQUIPMENT DESCRIPTION

1-9 EQUIPMENT CHARACTERISTICS, CAPABILITIES, AND FEATURES.

1-9.1 Characteristics. Each generator set is mounted on a modified trailer an M200A1, 2 l/2 Ton Trailer for the PU-800 and PU-802, an M116A3 1 Ton Trailer for the PU-801, and a High Mobility Trailer for the PU-801A Trailers are modified to include generator mounting rails, special fenders, an accessory box, and a fire extinguisher bracket. The M116A3 Trailer also has a heavy duty axle and heavy duty springs to support the generator set. Refer to TM 9-2330-205-14&P for detailed information about the M200A1, TM 9-2330-202-14&P for detailed information about the M116A3, and TM 9-2330-392-14&P for detailed information about the high mobility trailer.

1-9.1.1 Power Unit PU-800. The PU-800 has a Tactical Quiet Generator Set, DOD Model MEP-814A, liquid-cooled, diesel engine driven unit, with a load capacity of 15 kW, mounted on a single 2 l/2 ton trailer. Refer to TM 9-6115-643-10 for a detailed information about the generator set.

1-9.1.2 Power Units PU-801 and PU-801A. The PU-801 and PU-801A each have a Tactical Quiet Generator Set, DOD MEP-804A liquid-cooled, diesel engine driven unit, with a load capacity of 15 kW. The generator for PU-801 is mounted on a modified 1 ton trailer. The generator for PU-801A is mounted on a modified high mobility trailer. Refer to TM 9-6115-643-10 for detailed information about the generator set.

1-9.1.3 Power Unit PU-802. The PU-802 has a Tactical Quiet Generator Set, DOD Model MEP-804A liquid-cooled, diesel engine driven unit, with a load capacity of 15 kW, mounted on a modified 2 1/2 ton trailer. Refer to TM 9-6115-643-10 for detailed information about the generator set.

1-9.1.4 Power Plant AN/MJQ-39. The AN/MJQ-39 Power Plant consists of two PU-800 Power Units, a power cable and a switch box. The PU-800 Power Units have been identified as either unit A or unit B. The Switch Box is mounted on unit A and the cable is stored on unit B. The electrical output and towing information are the same as listed for the PU-800 in paragraph 1-9.2.1.

1-9.2 Capabilities and Features. The PU-800 and PU-802 are mounted on a modified M200A1, 2 1/2 ton trailer. The PU-801 is mounted on a modified M116A3, 1 ton, two-wheeled trailer. The PU-801A is mounted on a modified high mobility, two-wheeled trailer. The towing capabilities and features are as follows:

1-9.2.1 Power Unit PU-800.

TOWING VEHICLE	2 1/2 Ton 6x6 or 5 Ton 6x6
TIRE PRESSURE (Highway)	35 psi (241.3 kPa)
ELECTRICAL OUTPUT - 400 Hz:	
120/208 volts, three phase, 400 Hz	52 amps
240/416 volts, three phase, 400 Hz	26 amps

1-9.2.2 Power Units PU-801 and PU-801A.

TOWING VEHICLE

PU-801	CCUV or HMMWV
PU-801A	HMMWV

TIRE PRESSURE (Highway) . . . . . 35 psi (241.3 kPa)

ELECTRICAL OUTPUT - 50/60 Hz:
120/208 volts, three phase, 60 Hz . . . . 52 amps
240/416 volts, three phase, 60 Hz . . . . . 26 amps

1-9.2.3 Power Unit PU-802.

TOWING VEHICLE . . . . . 2 1/2 Ton 6x6 or 5 Ton 6x6

TIRE PRESSURE (Highway) . . . . . 35 psi (241.3 kPa)

ELECTRICAL OUTPUT - 50/60 Hz:
120/208 volts, three phase, 60 Hz . . . . 52 amps
240/416 volts, three phase, 60 Hz . . . . . 26 amps

1-9.2.4 Power Plant AN/MJQ-39.

TOWING VEHICLE . . . . . 2 1/2 Ton 6x6 or 5 Ton 6x6

TIRE PRESSURE (Highway) . . . . . 35 psi (241.3 kPa)

ELECTRICAL OUTPUT - 400 Hz:
120/208 volts, three phase, 400 Hz . . . . . 52 amps
240/416 volts, three phase, 400 Hz . . . . . 26 amps

1-10 LOCATION AND DESCRIPTION OF MAJOR COMPONENTS.

Figure 1-4 illustrates the major components. The illustration shows unit A of the AN/MJQ-39. PU-800, PU-801, PU-801A PU-802 and unit B of the AN/MJQ-39 have the same components as unit A with the exception of the switch box. In addition, the accessory box on unit A has been removed from the front platform and mounted on the curbside step. The accessory box on PU-801A is mounted at the front of the trailer across the generator mounting rails. Table 1-2 lists the major components of the power units or power plant.

Table 1-2. Description of Major Components, Power Plant or Power Unit.

Item No.	Item Name	Description
1	Switch Box (AN/MJQ-39 unit A only)	Allows connection of two generator sets provided with AN/MJQ-39.
2	Generator Set	Produces 120/208 or 240/416 three phase AC power at 15 kW. It is a DOD Model MEP-814A for the AN/MJQ-39 and PU-800. It is a DOD Model MEP-804A for the PU-801, PU-801A and PU-802.
3	Trailer	The trailer for the AN/MJQ-39, PU-800, and PU-802 is a modified M200A1. The trailer for the PU-801 is a modified M116A3. The trailer for the PU-801A is a modified HMT. Refer to TM 9-2330-205-14&P for further M200A1 breakdown, TM 9-2330-202-14&P for further M116A3 breakdown, and TM 9-2330-392-14&P for further HMT breakdown of basic trailer.

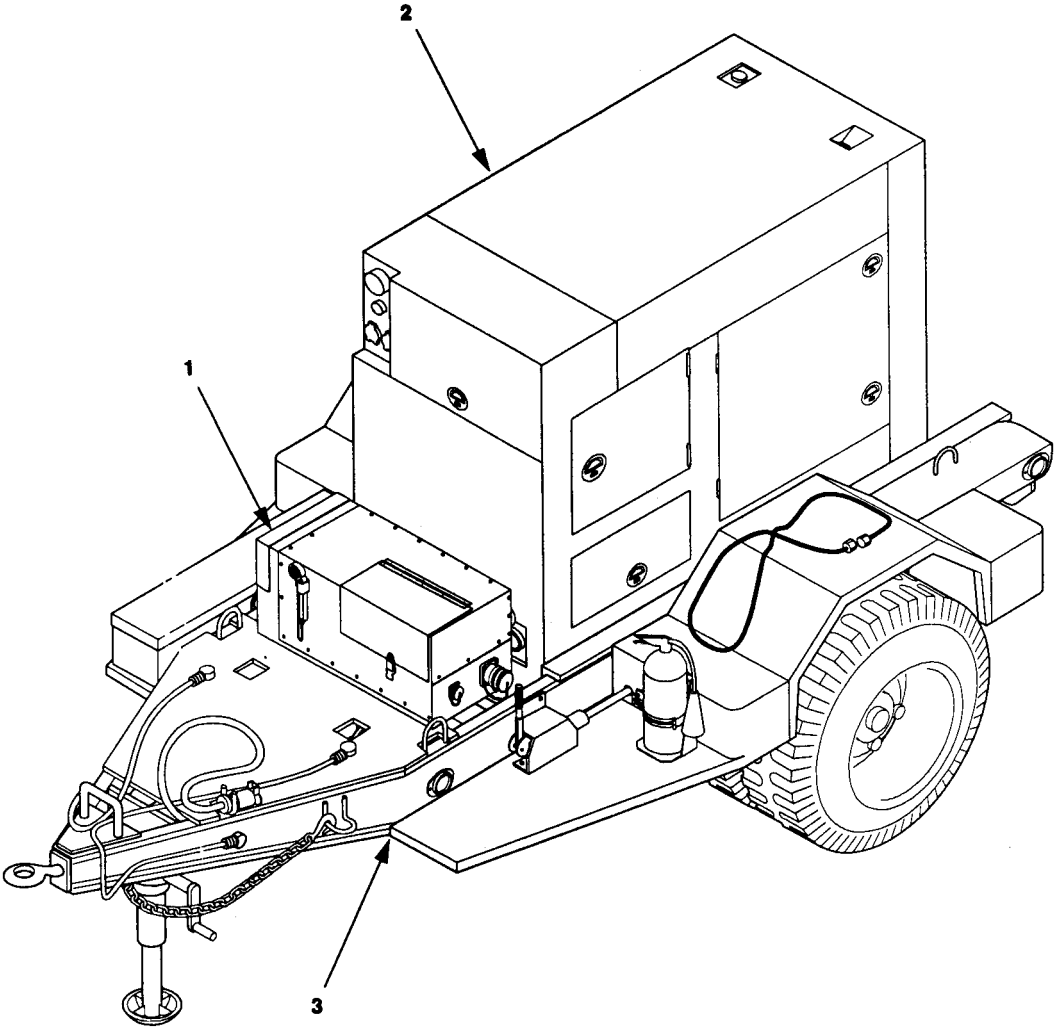

Figure 1-4. Location of Major *Components,* Power *Unit or Power Plant.*

1-11 DIFFERENCES BETWEEN MODELS.

Differences between the PU-800, PU-801, PU-801A PU-802, and AN/MJQ-39 are identified in table 1-4. A number (quantity) under the applicable power plant or power units column heading indicates that the item is a component of that power plant or power unit.

Table 1-3. Differences Between Models

Component	AN/MJQ-39 UNIT A	*AN/MJQ-39* UNIT B	PU-800	PU-801	PU-801A	PU-802
Generator Set, 50/60 Hz				1	1	1
Generator Set, 400 Hz	1	1	1			
Switch Box	1					
Power cable		1				
Trailer, 2 1/2 Ton	1	1	1			1
Trailer, 1 Ton				1		
Trailer, High Mobility					1	

1-12 EQUIPMENT DATA.

1-12.1 Generator Set. Refer to TM 9-6115-643-10 for the data on the generator set.

1-12.2 Trailer Chassis. Refer to TM 9-2330-205-14&P (2 1/2 Ton trailer), TM 9-2330-202-14&P (1 Ton trailer), and TM 9-2330-392-14&P (high mobility trailer) for the data on the trailer chassis.

1-12.3 Tabulated Data. Tabulated data for the power units and power plants are provided in table 1-4.

Table 1-4. Tabulated Data for Power Units and Power Plant.

Tabulated Data	AN/MJQ-39 Unit A	AN/MJQ-39 Unit B	PU-800	PU-801	PU-801A	PU-802
Overall length, inches (cm)	165.0 (419)	165.0 (419)	165.0 (419)	145.0 (368)	135.0 (343)	165.0 (419)
Overall width, inches (cm)	94.5 (240)	94.5 (240)	94.5 (240)	84.3 (214)	86.0 (218)	94.5 (240)
Overall height, inches (cm)	83.5 (212)	83.5 (212)	83.5 (212)	93.4 (237)	84.1 (214)	83.5 (212)
Operational weight, pounds (kg)	4893 (2219)	4863 (2205)	4855 (2202)	3180 (1442)		4920 (2322)
Shipping weight, pounds (kg)	5895 (2674)	5865 (2660)	5055 (2293)	3380 (1533)	3400 (1542)	5120 (2322]

Section III. PRINCIPLES OF OPERATION

1-13 FUNCTIONAL DESCRIPTION.

1-13.1 Power Unit Functional Description. The Power Units are mobile power sources and each consists of a Tactical Quiet 15 kW Generator Set mounted on a modified trailer. The generator set consists of a liquid-cooled diesel engine, brushless generator, excitation system, speed governing system, fuel system, 24-volt direct current starting system, control system, and malfunction protection system. The generator set has a reconnection board that has been initially positioned to allow a power output of either 120/208-volt, three phase or 240/416-volt, three phase AC power. The PU-801, PU-801A and PU-802 use a DOD Model MEP-804A Generator Set operating at 60 Hz with a load capacity of 15 kW. The PU-800 uses a DOD Model MEP-814A Generator Set operating at 400 Hz. System or equipment load cables are to be connected to the load terminals on the generator set output panel. Refer to TM 9-6115-643-24 for functional description of the generator set. The PU-800 and PU-802 are mounted on a 2 1/2 ton trailers. The PU 801 is mounted on a 1 ton trailer and referred to as the lightweight 15 kW generator set. The PU-801A is mounted on a high mobility trailer. Refer to TM 9-2330-205-14&P for functional description of the 2 1/2 ton trailer, TM 9-2330-202-14&P for the functional description of the 1 ton trailer, and TM 9-2330-392-14&P for the functional description of the high mobility trailer.

1-13.2 Power Plant Functional Descriptions. The Power Plant consists of two PU-800 Power Units, a switch box and power cable. The two PU-800 Power Units have been modified to provide independent switching between the Power Units. One PU-800 is modified by moving the accessory storage box to the curbside fender, adding a switch box and identifying the modified PU-800 as AN/MJQ-39 unit A. The other PU-800 is modified by adding a power cable and identifying the modified PU-800 as AN/MJQ-39 unit B. Refer to paragraph 1-13.1 for the functional description of the PU-800. Output electrical power is normally supplied through the switch box assembly located on unit A. The cable supplied with unit B connects the generator sets through the switch box on unit A. The control panel of the switch box controls the output source. The output source is usually either the unit A or unit B generator set as determined by the control panel switches. When both switches are placed in the ON position and both generators are on, the generators operate in parallel. The parallel operation of the generators allows for an uninterrupted load transfer between unit A and unit B. The output power cable to external equipment may be connected to the switch box from either connector J1 or load terminals (L0, L1, L2, L3, and GND) of the switch box. When connection is required from the generators, parallel operation is not lost. Refer to TM 9-6115-643-10 for operation and TM 9-6115-643-24 for a detailed functional description of the generator sets without a switch box.

1-14 RELATED TECHNICAL MANUALS.

Refer to Appendix A for related technical manuals.

CHAPTER 2

OPERATING INSTRUCTIONS

Subject Index — Page

Section 1. DESCRIPTION AND USE OF OPERATOR'S CONTROLS AND INDICATORS

2-1 OPERATOR'S CONTROLS AND INDICATORS.

Refer to TM 9-6115-643-10 for the generator set. Refer to TM 9-2330-205-14&P for the 2 1/2 ton trailer, TM 9-2330-202-14&P for the 1 ton trailer, and TM 9-2330-392-14&P for the high mobility trailer. Refer to figure 2-1 and table 2-1 for switch box assembly.

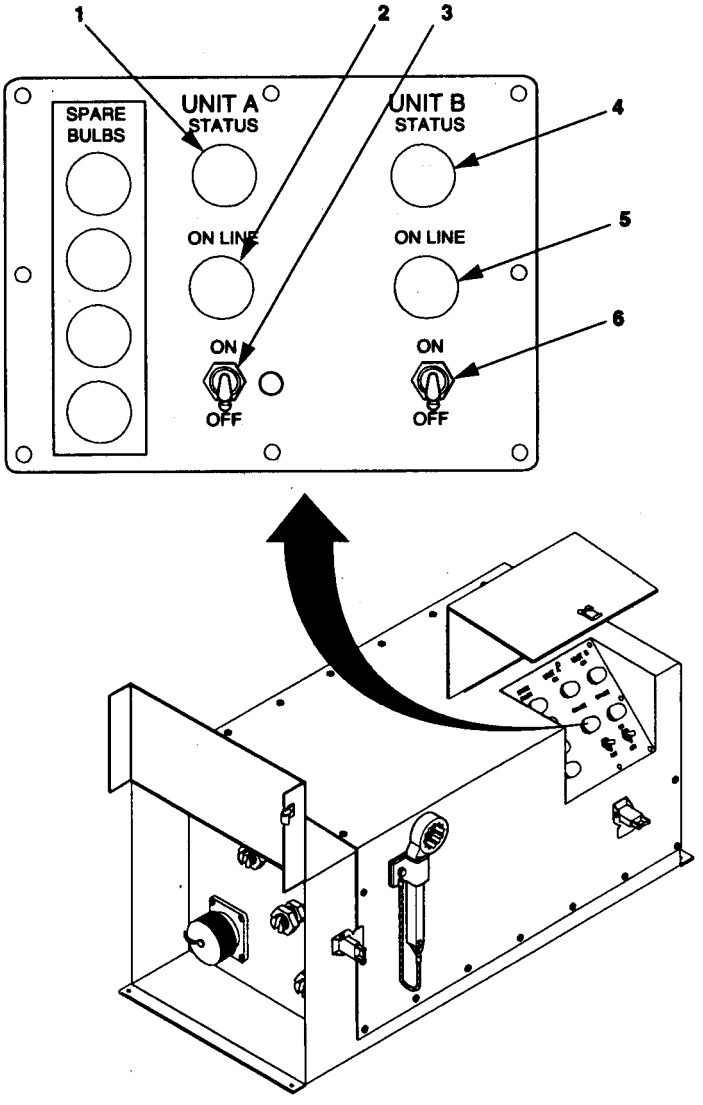

Figure 2-1. Switch Box Controls and Indicators.

Table 2-1. Description of Switch Box Controls and Indicators

Item Number	Description	Function
1	STATUS light for unit A generator set.	Lights when unit A generator set is supplying power to switch box.
2	ON LINE light for unit A generator set.	Lights when unit A generator set is supplying power to the load.
3	ON/OFF switch for unit A generator set.	Toggle switch, used to place unit A generator set on line when generator set is ready or take it off line before shutting it down.
4	STATUS light for unit B generator set.	Lights when unit B generator set is supplying power to switch box.
5	ON LINE light for unit B generator set.	Lights when unit B generator set is supplying power to the load.
6	ON/OFF switch for unit B generator set.	Toggle switch, used to place unit B generator set on line when generator set is ready or take it off line before shutting it down.

Section II. OPERATOR PREVENTIVE MAINTENANCE CHECKS AND SERVICES (PMCS)

2-2 INTRODUCTION TO OPERATOR PMCS TABLE.

Table 2-2 (PMCS table) has been provided so you can keep your equipment in good operating condition and ready for its primary mission.

2-2.1 Warnings, Cautions, and Notes. Always observe the ***WARNINGS, CAUTIONS,*** and **NOTES** appearing in your PMCS table. Warnings and cautions appear before applicable procedures. You must observe ***WARNINGS*** to prevent serious injury to yourself and others, You must observe ***CAUTIONS*** to prevent your equipment from being damaged. You must observe ***NOTES*** to ensure procedures are performed properly.

2-2.2 **Explanation of Table Entries.**

2-2.2.1 Item No. Column. Numbers in this column are for reference. When completing DA Form 2404 (Equipment Inspection and Maintenance Worksheet), include the item number for the check/service indicating a fault. Item numbers also appear in the order that you must do checks and services for the intervals listed.

2.2.2.2 **Interval Column.** This column tells you when you must do the procedure in the procedure column. "BEFORE" procedures must be done before you operate the power plant or power unit for its intended mission. "DURING' procedures must be done during the time you are operating the power plant or power plant for its intended mission. "AFTER' procedures must be done immediately after you have operated a power plant, immediately after shutting down one of the generator sets on a power plant, or immediately after you have operated a power unit. Perform "WEEKLY" procedures at the listed interval.

2-2.2.3 Location, Item to Check/Service Column. This column lists the location and the item to be checked or serviced. The item location is underlined.

2-2.2.4 Procedure Column. This column gives the procedure for checking or servicing the item listed in the location, item to check/service column. You must perform the procedure to know if the power unit or power plant is ready or available for its intended mission or operation. You must do the procedure at the time stated in the interval column.

2-2.2.5 Not Fully Mission Capable if: Column. Information in this column tells you what faults will keep your power plant or power unit from being capable of performing its primary mission. If you make checks or services that show faults listed in this column, do not operate the power plant or power unit.

2-2.3. Other Table Entries. Be sure to observe all special information and notes that appear in your table.

2-2.4. Special Instructions. Preventive maintenance is not limited to performing the checks and services listed in the PMCS table. Covering unused receptacles, stowing unused accessories, and other routine procedures such as equipment inventory, cleaning components, and touch-up painting are not listed in the table. These are things you should do any time you see that they need to be done. If a routine check is listed in the PMCS table, it is because experience has shown that problems may occur with this item. Take along tools and cleaning cloths needed to perform the required checks and services. Use the following information to help identify potential problems before and during checks and services. Use the information in the following paragraphs to help you identify problems at any time.

WARNING

Dry cleaning solvent used to clean parts is potentially dangerous to personnel and property. Clean parts in a well-ventilated area. Avoid inhalation of solvent fumes. Wear goggles and rubber gloves to protect eyes and skin. Wash exposed skin thoroughly. Do not smoke or use near open flame or excessive heat. Failure to observe this warning can cause injury to personnel or damage to equipment.

CAUTION

Keep cleaning solvents, gasoline and lubricants away from rubber or soft plastic parts. They will deteriorate material.

a. Keep it clean. Dirt, grease, and oil get in the way and may cover up a serious problem. Use dry cleaning solvent to clean metal surfaces.

b. Use soap and water to clean rubber or plastic parts and material.

c. Check all bolts, nuts, and screws to make sure they are not loose, missing, bent, or broken. Do not try to check them all with a tool, but look for chipped paint, bare metal, or rust around bolt heads. If you find one loose, tighten it or report it to unit level of maintenance.

d. Inspect welds. Look for loose or chipped paint, rust, or gaps where parts are welded together. If a broken weld is found, report it to unit level of maintenance.

e. Inspect electrical wires, connectors, terminals, and receptacles. Look for cracked or broken insulation, bare wires, and loose or broken connectors. Tighten loose connectors and make sure wires are in good condition. Examine terminals and receptacles for serviceability. If deficiencies are found, report them to unit level of maintenance.

f. Inspect hoses and fluid lines. Look for wear, damage, and leaks. Make sure that clamps and fittings are tight. Wet spots and stains around a fitting or connector can mean a leak. If a leak comes from a loose connector, or if something is broken or worn out, report it to unit level of maintenance.

2-2.5 Leakage Definitions. You must know how fluid leakage affects the status of your equipment. The following are definitions of the types/classes of leakage you need to know to be able to determine the status of your equipment. Learn and be familiar with them. When in doubt, *notify your supervisor.*

Leakage Class	Leakage Definition
Class I	Seepage of fluid (as indicated by wetness or discoloration) not great enough to form drops.
Class II	Leakage of fluid great enough to form drops, but not enough to cause drops to drip from the item being checked/inspected.
Class III	Leakage of fluid great enough to form drops that fall from the item being checked/inspected.

2-2.6 Operation of Power Unit/Power Plant with Minor Leaks.

CAUTION

Equipment operation is allowable with minor leakage (Class I or II) of any fluid except fuel. Fluid capacity must be considered before deciding to continue operation of the equipment with minor leaks. When operating with Class I or II leaks, fluid level must be checked more often than required by the PMCS table. Parts without fluid will stop working and/or cause equipment damage.

a. Consider the equipment's capacity for the fluid that is leaking. If the capacity is small, the fluid level may soon become too low for continued operation. If in doubt, *notify your supervisor.*

b. Check the fluid level more often than required in the PMCS table. Add fluid as needed.

2-2.7 Corrosion Prevention and Control (CPC). CPC of Army material is of continuing concern. It is important that any corrosion problems with the equipment be reported so that the problem can be corrected and improvements can be made to prevent the problem in future items. While corrosion is typically associated with rusting of metals, it can also include deterioration of other materials, such as rubber and plastic. Unusual cracking, softening, swelling, or breaking of these materials may be a corrosion problem. If a corrosion problem is identified, it can be reported using Standard Form 368, Product Quality Deficiency Report. Use of key words such as "corrosion," "rust," "deterioration," or "cracking" will ensure that the information is identified as a CPC problem. The form should be submitted to the address specified in DA Pam 738-750.

2-2.8 Order in Which PMCS Will be Done. Figure 2-2 shows the order in which you are to perform your PMCS. The figure shows a typical configuration having one generator set. *Keep in mind that the power plant consists of two PU-800 units and PMCS must be performed on each PU-800.* The number callouts on figure 2-2 correspond to the numbers in the Item No. column of table 2-2, for BEFORE PMCS.

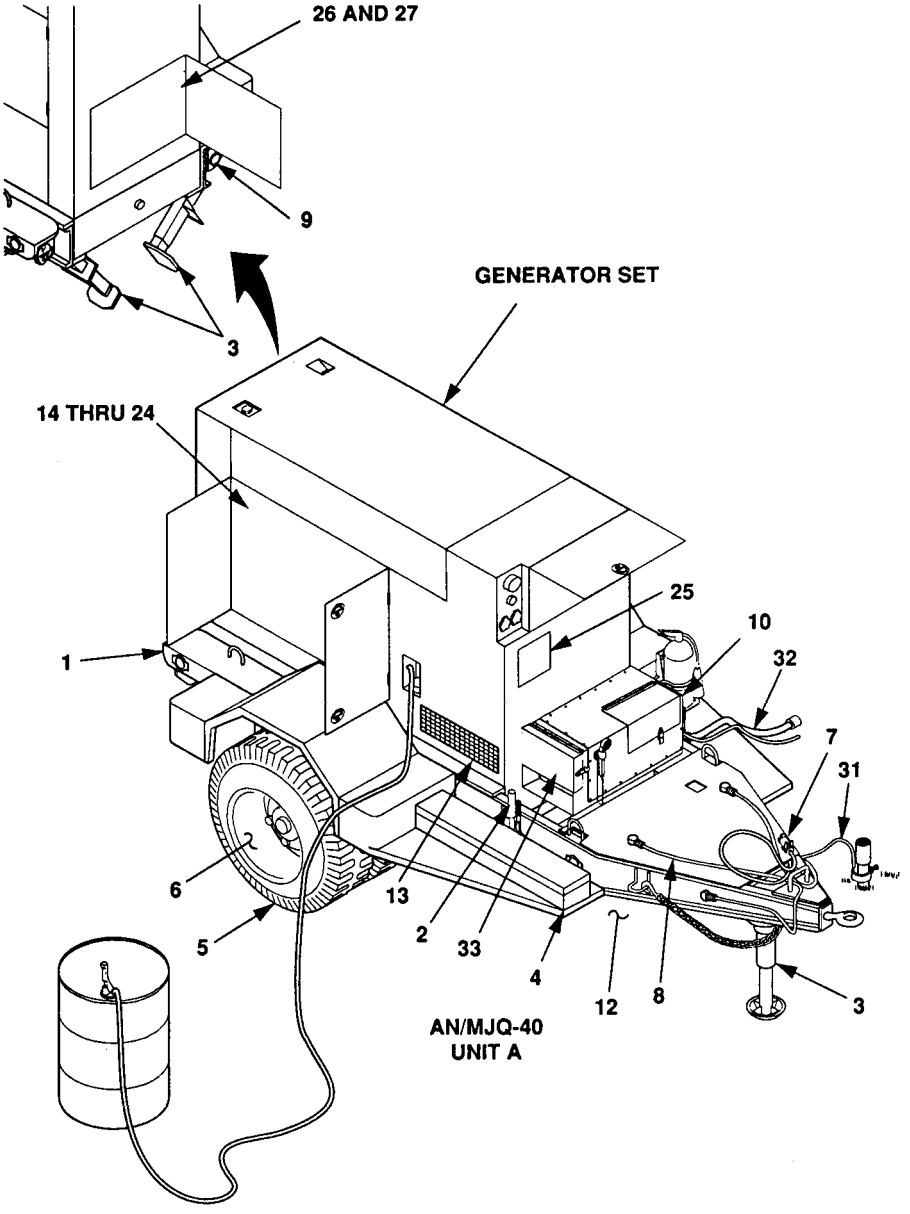

Figure 2-2. Operator PMCS Routing Diagram (sheet 1 of 3).

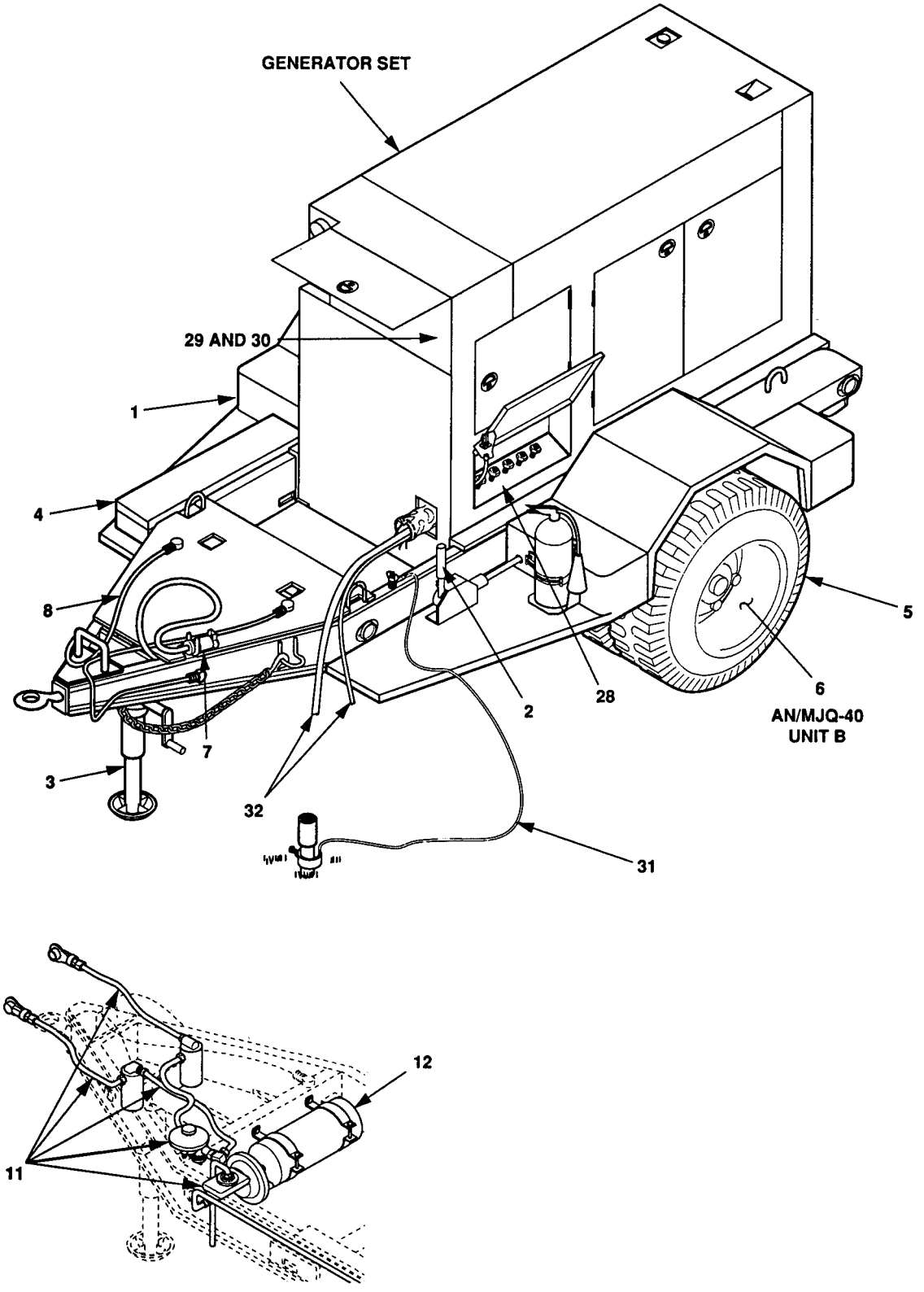

Figure 2-2. Operator PMCS Routing Diagram (sheet 2).

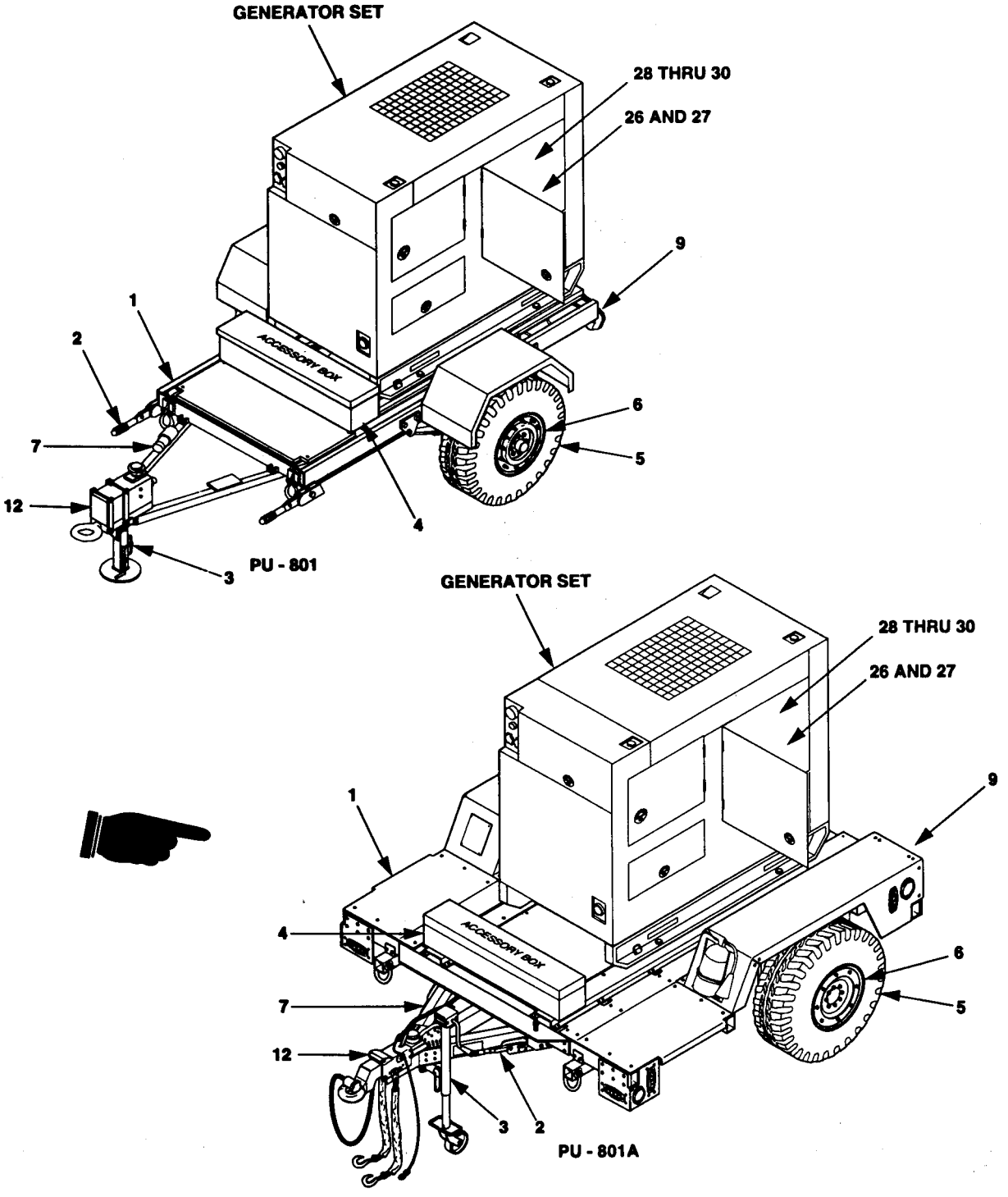

Figure 2-2. Operator PMCS Routing Diagram (sheet 3).

Table 2-2. Operator Preventive Maintenance Checks and Services

NOTE

If equipment must be in continuous operation, check and service only those items that can be checked and serviced without disturbing operation. Make complete checks and services when equipment can be shut down. When a procedure is required for both weekly and before intervals, it is not necessary to do the procedure twice if the equipment is operated during the weekly period.

Item No.	Interval	Location / Item to Check/Service	Procedure	Not Fully Mission Capable if:
		WARNING Before performing any maintenance that requires climbing on or under trailer, make sure that trailer handbrakes are set and trailer is supported to prevent rolling or tipping. Injury to personnel could result from trailer suddenly rolling or tipping,		
		'RAILER		
1	Before	VISUAL INSPECTION • Fenders/body • Gen set door • Reflectors • Landing leg • Skid base • Lunette • Chains • Identification plates	a. Check for damage.	Any condition renders the power plant/power unit not mission capable.
		• Fuel and coolant	b. Check on, around and under equipment for fuel, oil or coolant leaks.	Class III coolant or any class fuel leak is detected.
2	Before	HANDBRAKE	a. Check operation of handbrake lever (1). Lever should move freely through its entire travel.	Handbrake lever (1 or 2) locked in applied position.
			b. Check adjustment of handbrake lever (1). Lever is properly adjusted when it is difficult to move beyond two-thirds of the way to the applied position. If out of adjustment, see step d.	
			c. With trailer hooked to towing vehicle, set handbrake lever (1). Move trailer slightly to see if handbrakes hold wheels. If not proceed to step d.	

Table 2-2. ***Operator Preventive Maintenance Checks and Services*** **(continued)**

Item No.	Interval	Location Item to Check/Service	Procedure	Not Fully Mission Capable if:
		TRAILER - continued		
2	Before	HANDBRAKE - continued	d. Adjust handbrake as follows. 1. Release handbrake lever (1). 2. Turn adjustment knob (2) clockwise to tighten or counterclockwise to loosen. If unable to adjust, or if adjustment has been used up, refer to Unit Level Maintenance. 3. Check adjustment (Refer to step b). Repeat steps 1 and 2 as required. Repeat step c.	
3	Before	LANDING LEG, STEP JACK AND REAR LEVELING-SUPPORT JACK	Check for loose, missing, damaged or corroded parts, and for any unusual signs of deterioration. a. With trailer connected to towing vehicle, check landing leg assembly (3) for easy operation; and for proper mounting, alignment, and general condition. Check that locking lever: • Can be locked in stored and support positions. • Is attached to leg with chain. • Can be adjusted up and down.	Landing leg assembly will not ecure in stored position, or will not upport trailer.

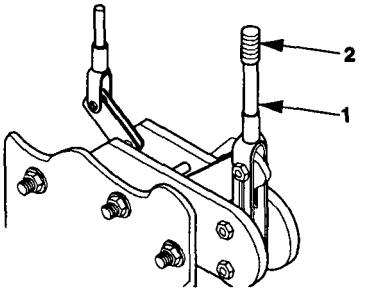

Table 2-2. Operator Prevenentive Maintenance Checks and Services (continued)

Item No.	Interval	Location: Item to Check/Service	Procedure	Not Fully Mission Capable if:
		TRAILER - continued		
3	Before	LANDING LEG, STEP JACK AND REAR LEVELING-SUPPORT JACK - continued	Check landing leg for proper mounting, alignment, and general condition	
			Check rear leveling-support jack (PU-801), or step jacks (PU-800 and AN/MJQ-39) (4) for secure mounting and for ease of operation.	Rear support jacks will not secure in stored position, or will not support trailer.
			Ensure rear leveling-support jack (or step jacks) can be locked in stored and support positions.	
			Ensure locking pin is attached to jack with chains.	
			Ensure leveling-support jack foot can be adjusted up or down.	
4	Before	ACCESSORIES	Check that following accessories are not missing or damaged: • Auxiliary fuel hose(s) • Fire Extinguisher (stored in fire extinguisher bracket on fender), check seal. • Accessory box.	Fire extinguisher missing or seal pen.

Table 2-2. Operator Preventive Maintenance Checks and Services (continued)

Item No.	Interval	Location Item to Check/Service	Procedure	Not Fully Mission Capable if:
		TRAILER - continued		
4	Before	ACCESSORIES - continued	***NOTE*** Remaining accessories are stored in accessory box, and ground rod may be stored in generator set (5).	
			• Fuel container adapter	
			• Ground rod	Ground rod missing.
			• Hammer, 8 lb	
			• Load terminal wrench	
			• Slide hammer	
			• Ground cable	Ground cable missing.

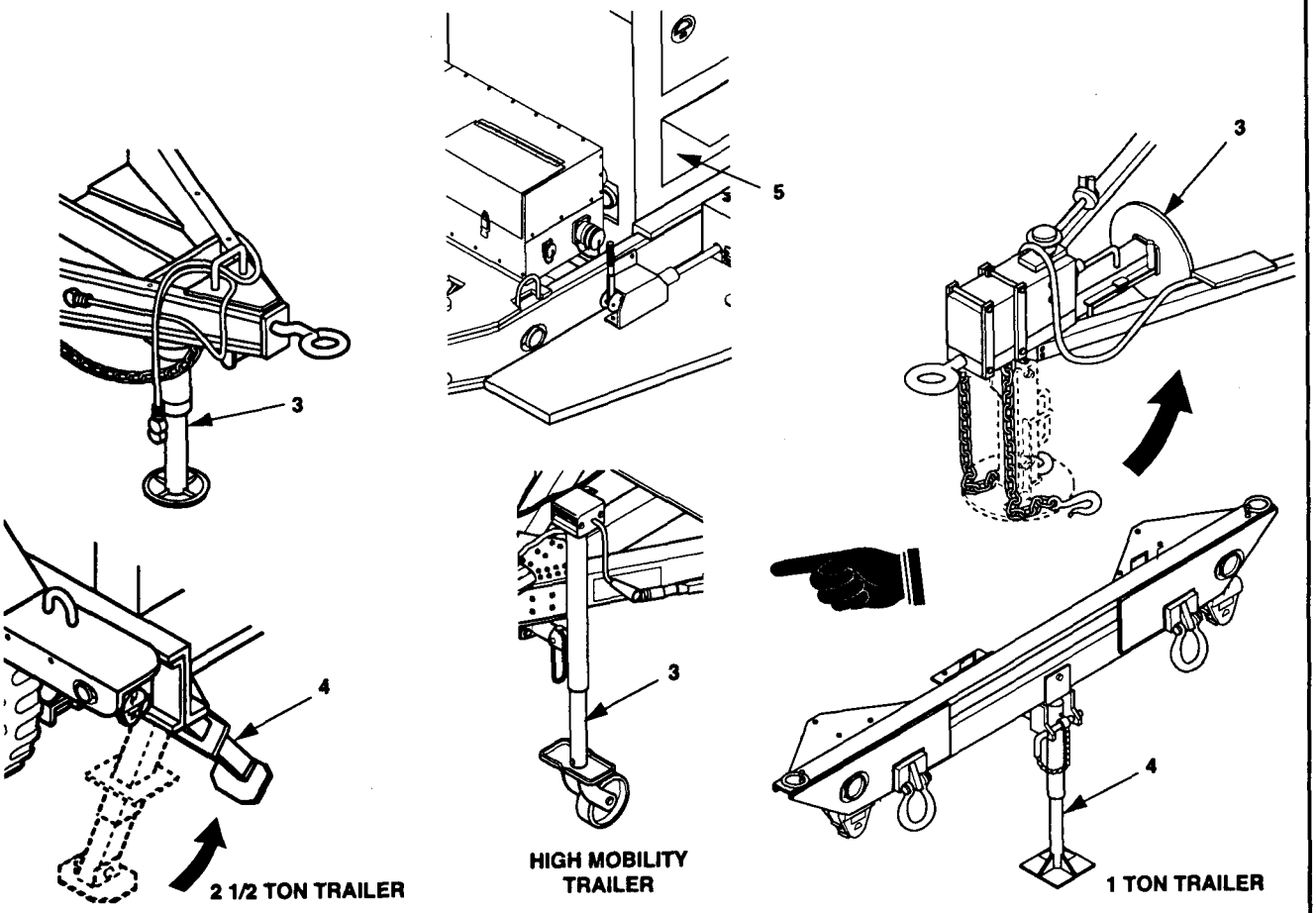

Table 2-2. Operator Preventive Maintenance Cheeks and Services (continued)

Item No.	Interval	Location: Item to Check/Service	Procedure	Not Fully Mission Capable if:
		TRAILER - continued		
5	Before	TIRES	a. Check tires (6) for cuts, bruises, bulges, or unusual tread wear. Remove any foreign objects from between treads.	Tires are unserviceable.
			b. Check tire pressure when tires are cool, for 45 psi (248 kPA).	Tire will not hold air pressure.
6	Before	WHEELS	a. Check wheels (7) for damage and for leakage around flange gasket.	Wheel has Class III leak at flange gasket
			b. Check to see if stud nuts (8) are loose or missing.	One stud nut is loose or missing.

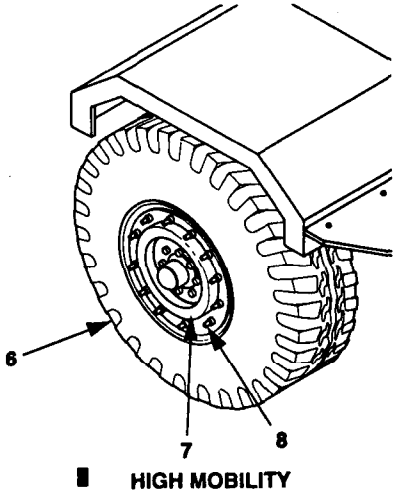

HIGH MOBILITY AND 1 TON TRAILER

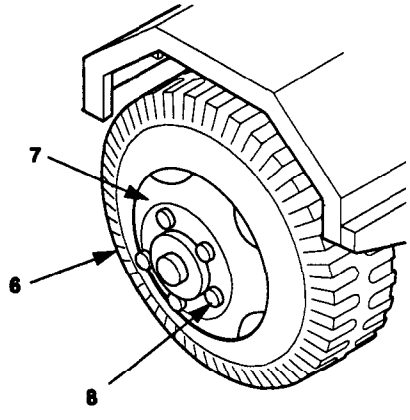

2 1/2 TON TRAILER

7	Before	INTER VEHICULAR CABLE	a. Check inter vehicular cable (9) for cuts and breaks.	Cable is severed or missing.
			b. Open cable protective cover. Inspect for broken, missing and burnt pins.	
8	Before	AIR HOSE AND COUPLER (PU-800, PU-802 AND AN/MJQ-39)	a. With trailer hooked to towing vehicle, check air hose (10) for leaks, cuts, and abrasions.	Air leaks are found, o cuts in hose deep enough for cords to show.
			b. Check coupler body (11) for damage. Check if seal (12) is missing or damaged.	Coupler body is cracked or broken. Seal is missing.

Table 2-2. Operator Preventive Maintenance Checks and Services (continued)

Item No.	Interval	Location / Item to Check/Service	Procedure	Not Fully Mission Capable if:
		TRAILER - continued		
9	Before	LIGHTS	a. Check for obvious damage or looseness of lights and lenses. ***NOTE*** An assistant is required while checking brake lights. b. Connect the intervehicular cable (9) to the towing vehicle. c. Operate the vehicle light switch through all settings and check the lights (13).	Lights are damaged, not serviceable.

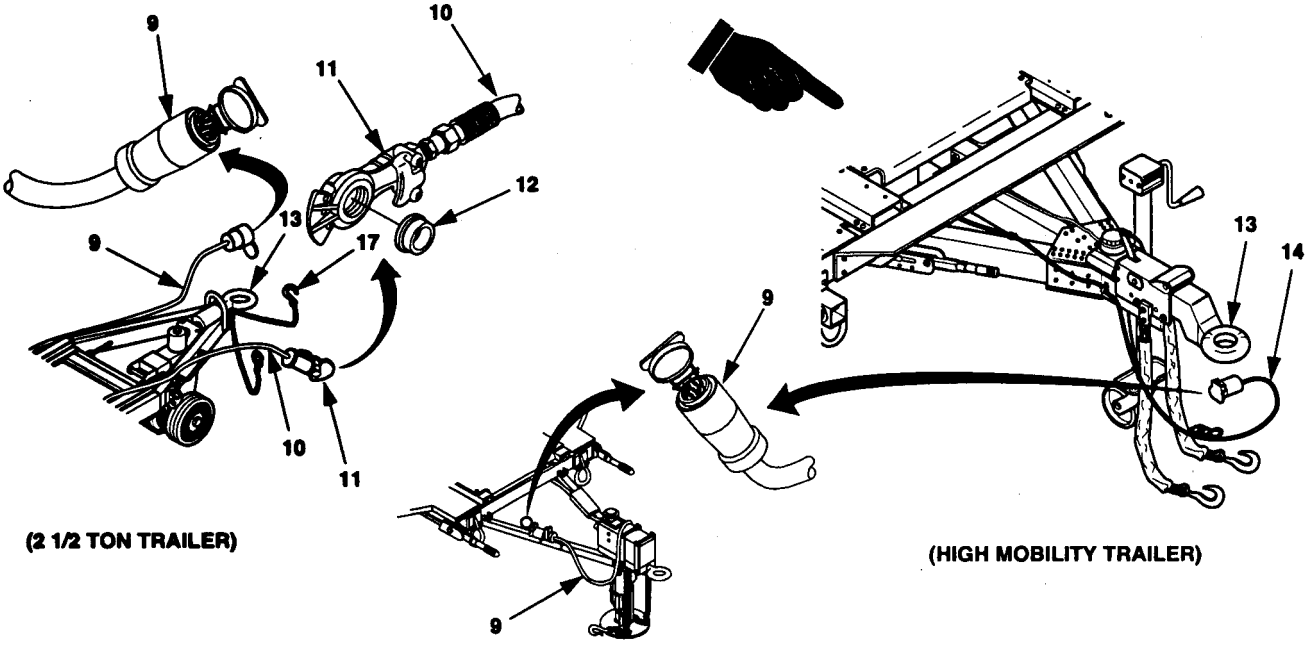

Table 2-2. Operator Preventive Maintenance Checks and Services (continued)

Item No.	Interval	Location Item to Check/Service	Procedure	Not Fully Mission Capable if:
		TRAILER - continued		
10	Before	SWITCH BOX ASSEMBLY (POWER PLANT UNIT A ONLY)	Visually check for the following: • Loose or missing mounting hardware • Damaged indicator lights • Damaged or missing hinges and latches • Loose or damaged switches • Damaged or missing output terminals or connectors.	Two or more mounting bolts missing. Indicator lights are damaged. Switches loose or damaged. Output terminal or connectors will not secure load cables.

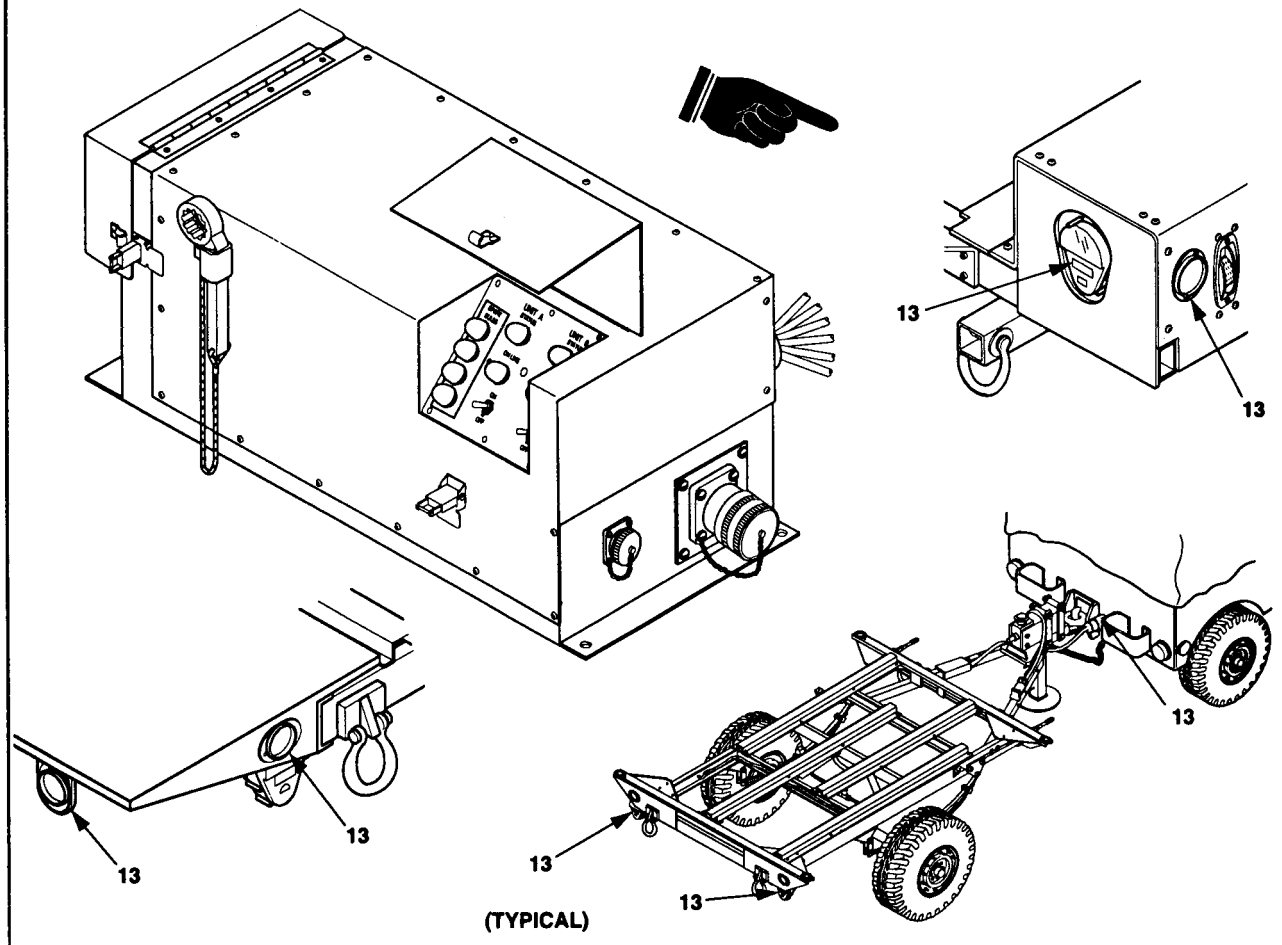

Table 2-2. Operator Preventive Maintenance Checks and Services (continued)

Item No.	Interval	Location Item to Check/Service	Procedure	Not Fully Mission Capable if:
		TRAILER - continued		
11	Before	SERVICE BRAKE SYSTEM	a. Check for leakage of brake fluid from master cylinder (14).	Cable is broken or missing.
			b. Check for leakage of brake fluid from hydraulic brake lines (15), fittings (16), or at backing plates (17).	Brake system has any leaks or brakes do not hold.
12	Before	BRAKE ACTUATOR (PU-801 ONLY)	Check actuator (18) for leaks, and loose and missing hardware.	Brake system has any leaks or brakes do not hold.

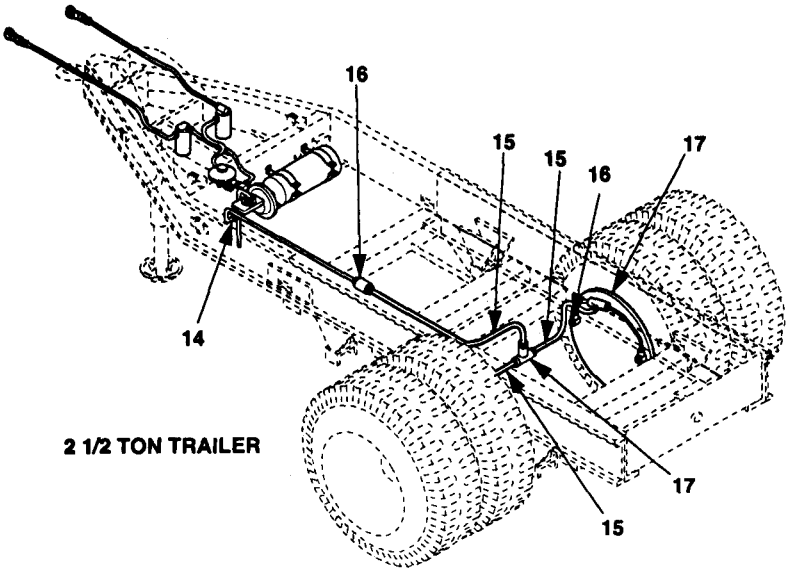

2 1/2 TON TRAILER

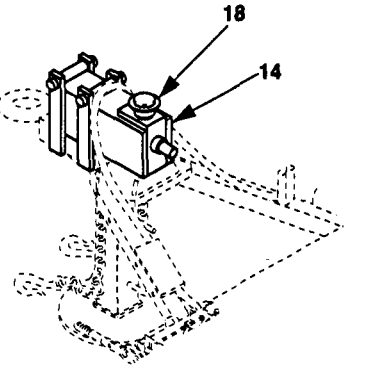

HMT AND
1 TON TRAILER

13	Before	AIR RESERVOIR,LINES, AND FITTINGS (2 1/2 TON TRAILER ONLY)	a. Check for damage and loose or missing parts.	Hose is damaged or parts are loose or missing.
			b. Ensure that drain cock (19) is closed.	Drain cock will not close.

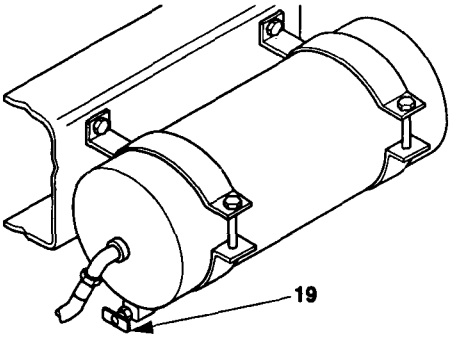

Table 2-2. Operator Preventive Maintenance Checks and Services (continued)

Item No.	Interval	Location Item to Check/Service	Procedure	Not Fully Mission Capable if:
		GENERATOR SET		
14	Before	ACOUSTICAL MATERIALS	Ensure that acoustical materials, located in the grill areas, are secure, not damaged or missing.	

WARNING

With any access door open, the noise level of this generator set could cause hearing damage. Hearing protection must be worn when working near the generator set while working.

WARNING

The fuels used in this generator set are highly explosive. DO NOT smoke or use open flame when performing maintenance. Flames and explosion can occur, resulting in severe personal injury or death.

15	Before	ENGINE ASSEMBLY	Visually inspect the generator set for fuel, oil and coolant leaks. Check for proper ground connections.	Any fuel leaks. Any Class III oil or coolant leaks.
			Visually inspect the engine for missing, loose, or damaged parts and hardware, and for unusual wear or deterioration. • DEAD CRANK switch to NORMAL.	Any condition that enders power unit/power plant not mission capable.

Table 2-2. Operator Preventive Maintenance Checks and Services (continued)

Item No.	Interval	Location Item to Check/Service	Procedure	Not Fully Mission Capable if:
		GENERATOR SET - continued		
16	Before	FUEL SYSTEM	Inspect fuel injector, fuel injector pump (20), fuel injector line (21), and fuel line for leaks, damage, and for loose or missing hardware.	Any fuel leaks, damage, loose or missing parts.

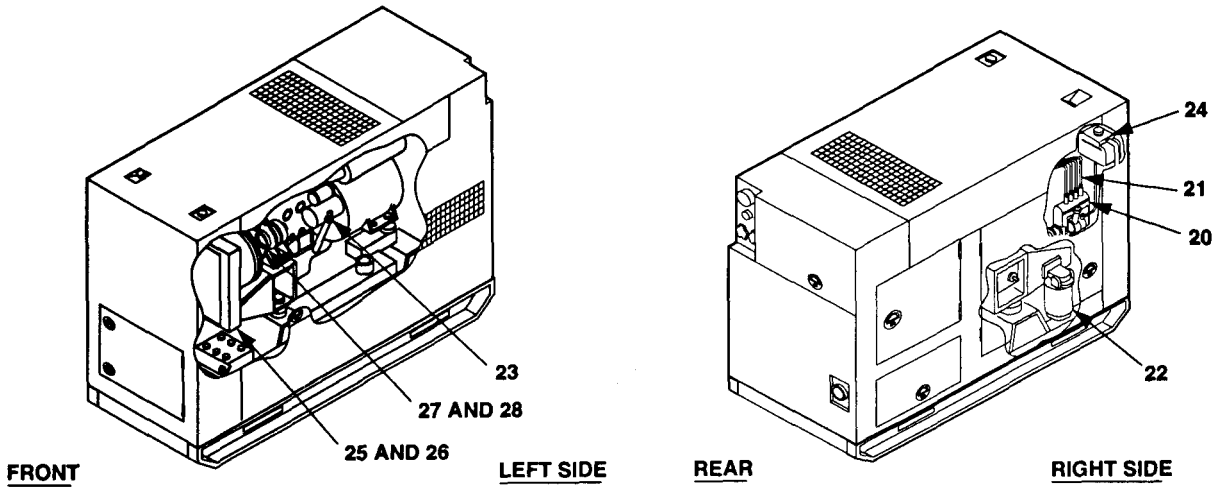

17	Before	FUEL FILTER/WATER SEPARATOR	a. Inspect fuel filter/water separator (22) for leaks, improper mounting, cracks, damage, or missing parts. b. Drain water from fuel filter/water separator (22).	Any fuel leaks.
18	Before	LUBRICATION SYSTEM	a. Inspect lubrication system for leaks, damaged, loose, or missing parts. b. Check oil level (23). Add as necessary. c. Check engine oil for contamination.	Class III leaks, damaged, loose or missing parts. Engine oil shows signs of contamination.

Table 2-2. Operator Preventive Maintenance Checks *and Services* (continued)

Item No.	Interval	Location / Item to Check/Service	Procedure	Not Fully Mission Capable if:
			WARNING Cooling system operates at high temperature. Personal injury or death from burns or scalding can result from contact with high-pressure steam or liquid.	
		GENERATOR SET - continued		
19	Before	RADIATOR	Check radiator (25) for leaks, damage or missing parts.	Class III leaks. Radiator cap missing.
20	Before	HOSES	Check hoses (26) for leaks, cracks, or deterioration.	Class III leaks.
21	Before	COOLING FAN	Check fan (27) for damage or looseness.	Damaged or loose.
22	Before	FAN BELT	Inspect belt (28) for cracks, fraying, or looseness.	Broken or loose belt.
23	Before	OVERFLOW BOTTLE	a. Check overflow bottle (24) for leaks, or missing parts. b. Check coolant level.	Class III leaks.

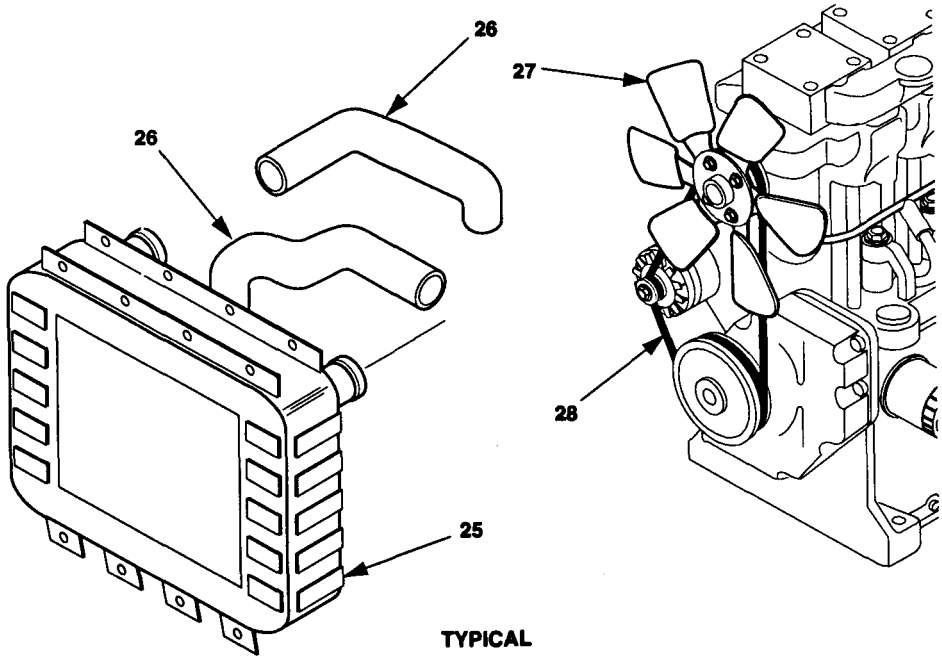

Table 2-2. Operator Preventive Maintenance Checks and Services (continued)

Item No.	Interval	Location / Item to Check/Service	Procedure	Not Fully Mission Capable if:
		WARNING		
		Exhaust discharge contains deadly gases. DO NOT operate generator set in enclosed areas unless exhaust is properly vented outside. Severe personal injury or death due to carbon monoxide poisoning could result.		
		GENERATOR SET - continued		
24	Before	EXHAUST SYSTEM	Check muffler (29) for evidence of leakage and exhaust system for corrosion, damage or missing parts.	Muffler or exhaust system damaged or ieaking.

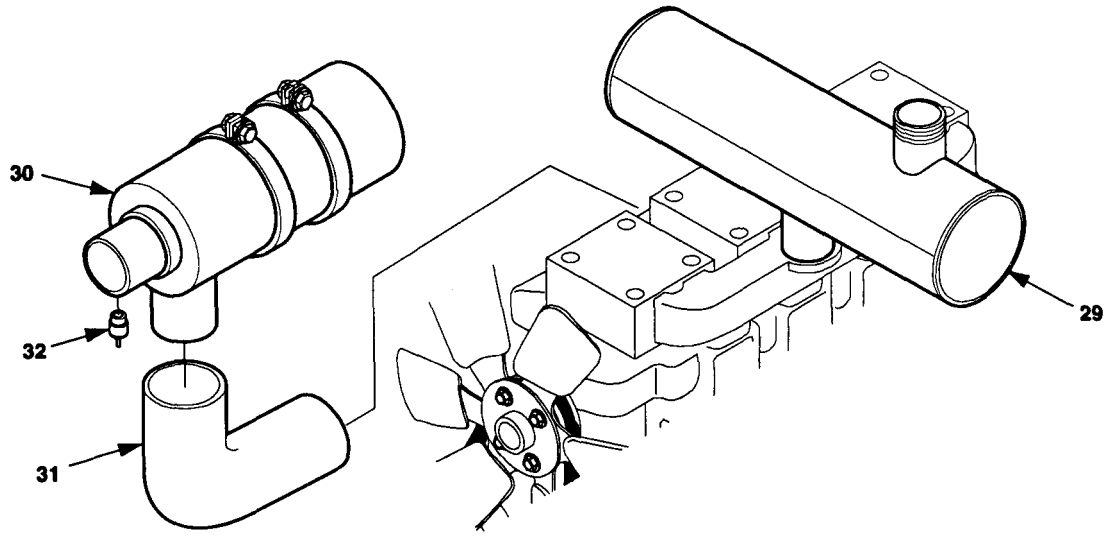

25	Before	AIR CLEANER ASSEMBLY	Inspect air cleaner assembly (30) and piping (31) for loose or damaged connections.	Loose or damaged connections.
			Inspect restriction indicator (32) for clogged element. If indicator shows red, notify next higher level of maintenance.	Clogged element is indicated or piping and connections are loose.

Table 2-2. Operator Preventive Maintenance Checks and Services (continued)

Item No.	Interval	Location Item to Check/Service	Procedure	Not Fully Mission Capable if:
		WARNING Battery acid can cause burns to unprotected skin.		
		WARNING Batteries give off a flammable gas. DO NOT smoke or use open flame when performing maintenance on batteries. Flames and explosion could result in severe personal injury or death.		
		GENERATOR SET - continued		
26	Before	BATTERIES	a. Check batteries for damage or missing caps. b. Inspect electrolyte level. If low notify next higher maintenance level.	Batteries not charged.
27	Before	BATTERY CABLES	Inspect cables and connectors for corrosion, damage, loose, or missing parts.	Cables are damaged or missing.
		WARNING DO NOT touch live voltage connections. High voltage is produced when this generator set is operating. Personal injury or death due to electrocution could result.		
28	Before	OUTPUT BOX ASSEMBLY	a. Check for loose or damaged wiring or cables. b. Check output terminals for damage or missing hardware.	Missing or damaged wiring or cables. Damaged or missing hardware.

Table 2-2. Operator Preventive Maintenance Checks and Services (continued)

Item No.	Interval	Location: Item to Check/Service	Procedure	Not Fully Mission Capable if:
		GENERATOR SET - continued		
29	Before	CONTROLS AND INDICATORS	Check indicators and controls for damage or missing parts. Place PRIME RUN switch to AUX PRIME RUN and press TEST RESET LAMPS button on fault indicator. All test lamps must light. Check fuel gauge for fuel indication.	Indicators or controls damaged or missing.
30	Before	CONTROL BOX HARNESS	Check inside control box for loose or damaged wiring.	Loose or damaged wires.

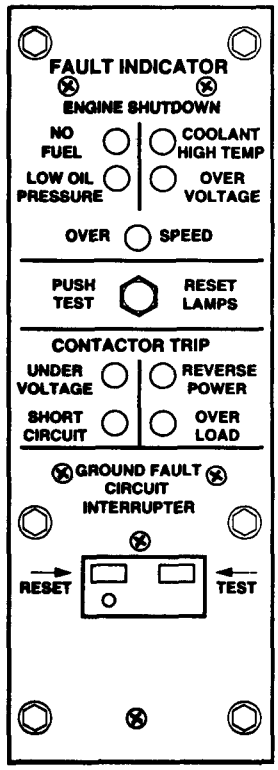

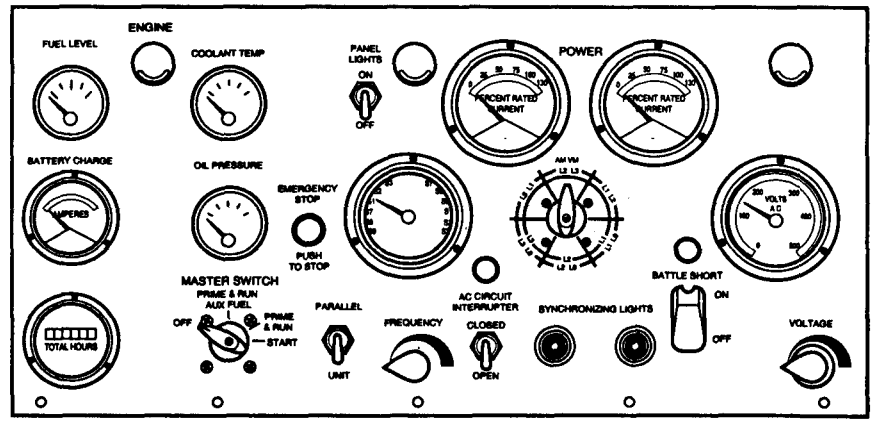

Table 2-2. Operator Preventive Maintenance Checks and Services (continued)

Item No.	Interval	Location / Item to Check/Service	Procedure	Not Fully Mission Capable if:
		WARNING NEVER attempt to start the generator set when it is not properly grounded. Personal injury or death due to electrocution could result.		
		GENERATOR SET Continued		
31	Before	GROUND ROD CABLE AND CONNECTIONS	[nspect ground rod and cable for loose connections, breaks, damage snd corrosion.	Cable is missing or damaged.
32	Before	INPUT LOAD AND PARALLELING CABLES	Ensure cables are properly installed, Inspect for damage and cutting.	Cables are too small or improperly installed for load.
33	Before	OUTPUT CONNECTOR	Inspect output connector for missing hardware or damage.	

Table 2-2. Operator Preventive Maintenance Checks and Services (continued)

Item No.	Interval	Location: Item to Check/Service	Procedure	Not Fully Mission Capable it:
		TRAILER		
34	During	TRAILER OPERATION	a. Be alert for unusual noises when towing the trailer. Stop and investigate such noises.	
			b. Ensure that the trailer is tracking/following correctly behind towing vehicle with no side pull.	Brakes locked up.
35	During	SWITCH BOX ASSEMBLY	Check indicator lights. Ensure indicator lights are operating properly.	
36	During	HOUSING	a. Check doors, hinges, and latches for damage, loose, or corroded items.	Cannot secure door.
			b. Inspect air intake and exhaust grills for debris.	Grills plugged; air flow cut off.

WARNING

With any access door open, the noise level of this generator set when operating could cause hearing damage. Hearing protection must be worn when working near the generator set while working.

WARNING

The fuels used in this generator set are highly explosive. DO NOT smoke or use open flame when performing maintenance. Flames and explosion can occur, resulting in severe personal injury or death.

Table 2-2. Operator Preventive Maintenance Checks and Services (continued)

Item No.	Interval	Location: Item to Check/Service	Procedure	Not Fully Mission Capable if:
		WARNING		
		Exercise extreme caution when performing DURING checks inside engine compartment. Avoid contact with moving or hot engine parts. Failure to observe this-warning can result in severe personal injury or death.		
		GENERATOR SET		
37	During	ENGINE ASSEMBLY	Check for loose, damaged or missing parts.	
38	During	FUEL SYSTEM	Inspect for leaks.	Any fuel leaks.
39	During	LUBRICATION SYSTEM	a. Inspect for leaks.	Class III leaks.
			b. Check oil level on dipstick, both sides,	Oil level below ADD level.
40	During	COOLING FAN	Listen for unusual noise in fan area.	
41	During	GROUND ROD CABLE AND CONNECTIONS	Inspect ground rod and cable for loose connections, breaks, damage, and corrosion.	Cable is missing or damaged.
		WARNING		
		High voltage is produced when this generator set is operating. Improper operation could result in injury or death,		
42	During	CONTROLS AND INDICATORS	Observe the following Indicators and ensure they are functioning. • Coolant temp, 170-200°F (77-93° c) • Oil pressure, 25-60 psi (172-414kPA)	

Table 2-2. Operator Preventive Maintenance Checks and Services (continued)

Item No.	Interval	Location Item to Check/Service	Procedure	Not Fully Mission Capable if:
		GENERATOR SET - Continued		
43	After	HOUSING	a. Check doors, panels, hinges, and latches for damage, loose, or corroded items. b. Inspect air intake and exhaust grills for debris.	Cannot secure doors. Intake and exhaust grills plugged.
44	After	IDENTIFICATION PLATES	Check to be sure identification plates are secure.	
45	After	SKID BASE	Inspect skid base for cracks and corrosion.	Skid base cracked or shows signs of structural damage.

WARNING

DO NOT smoke or use open flame near this generator set. The fuels used in it are highly explosive. Flames and explosion can occur, resulting in severe personal injury or death.

46	After	ENGINE ASSEMBLY	Check for loose, damaged, or missing hardware.	
47	After	FUEL SYSTEM	Inspect fuel system for leaks, damaged, loose, or missing hardware.	any fuel leaks, damaged, loose, or missing parts.
48	After	FUEL FILTER/WATER SEPARATOR	a. Inspect fuel filter/water separator for leaks, cracks, damage, proper mounting, or missing parts. b. Drain water from fuel filter/water separator.	Any fuel leaks.
49	After	LUBRICATION SYSTEM	a. Inspect lubrication system for leaks, damaged, loose, or missing parts. b. Check oil level. Check engine oil for contamination.	Class III leaks, damaged, loose, or missing parts. Oil level is below ADD level. Engine oil shows contamination.

Table 2-2. Operator Preventive Maintenance Checks and Services (continued)

Item NO.	Interval	Location / Item to Check/Service	Procedure	Not Fully Mission Capable if:
		COOLING SYSTEM		
		WARNING Be very careful to avoid contact with high-pressure steam and/or liquid. Cooling system operates at high temperatures, and personal injury or death from burns or scalding can result from such contact.		
50	After	RADIATOR	Check radiator for leaks, damage, or missing parts.	Class III leaks. Radiator cap missing.
51	After	HOSES	Check hoses for leaks or cracks.	Class III leaks.
52	After	FAN BELT	Inspect belt for cracks, fraying, or looseness.	Broken belt.
53	After	OVERFLOW BOTTLE	Check overflow bottle for leaks or missing parts. Check coolant level.	Class III leaks. Coolant level is below cold line.
		CONTROL BOX ASSEMBLY		
54	After	CONTROLS AND INDICATORS	Check all indicators and controls for damaged or missing parts	Indicators on controls damaged or missing.

Section III. OPERATION UNDER USUAL CONDITIONS

2-3 ASSEMBLY AND PREPARATION FOR USE.

2-3.1 Unpacking the Equipment. Unpacking must be performed by unit level maintenance personnel.

2-3.2 Installation Instructions.

2-3.2.1 Positioning Power Unit. Position the equipment at the worksite as follows:

NOTE

There will be two units for the Power Plant AN/MJQ-39. This procedure must be performed on each unit and trailer. The two units must be positioned to allow the interconnection of the supplied cables.

a. Select an area as level as possible to install equipment.

b. When installing the power plant, locate the two power units side by side as shown in figure 2-3.

c. Set the trailer handbrakes and lower trailer support devices. Refer to TM 9-2330-205-14&P for detailed installation of 2 l/2 ton trailer. Perform the following for the 1 ton and high mobility trailers:

WARNING

Be sure trailer leveling-support jack is lowered before operating power plant/power unit. Serious injury to personnel can result if the trailer upends when disconnected from the towing vehicle.

(1) Pull out spring-loaded plunger on 1 ton trailer or pin on high mobility trailer (1, figure 2-4).

(2) Push support leg (2) down.

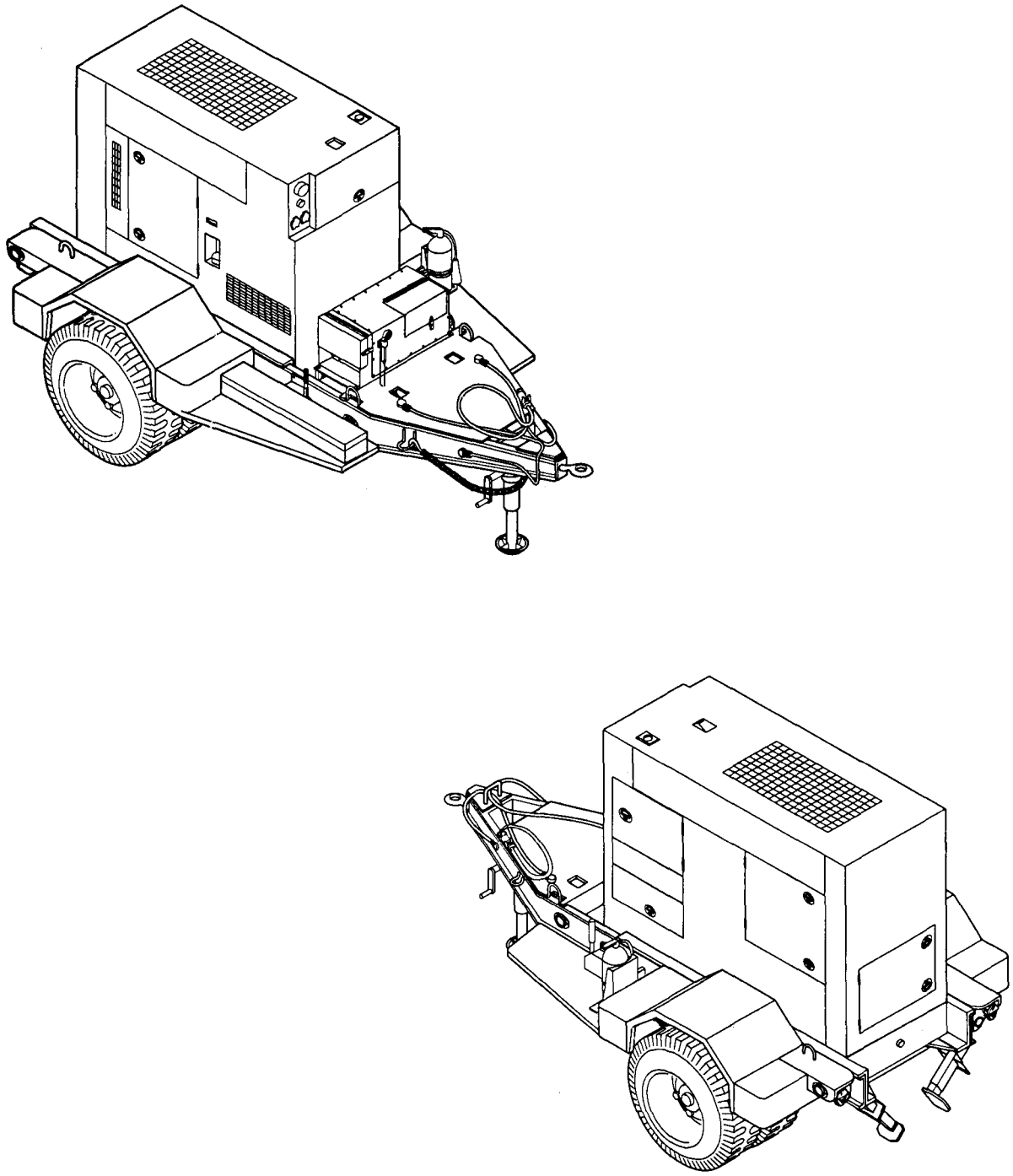

Figure 2-3. Power Plant Unit A and Unit B Installation.

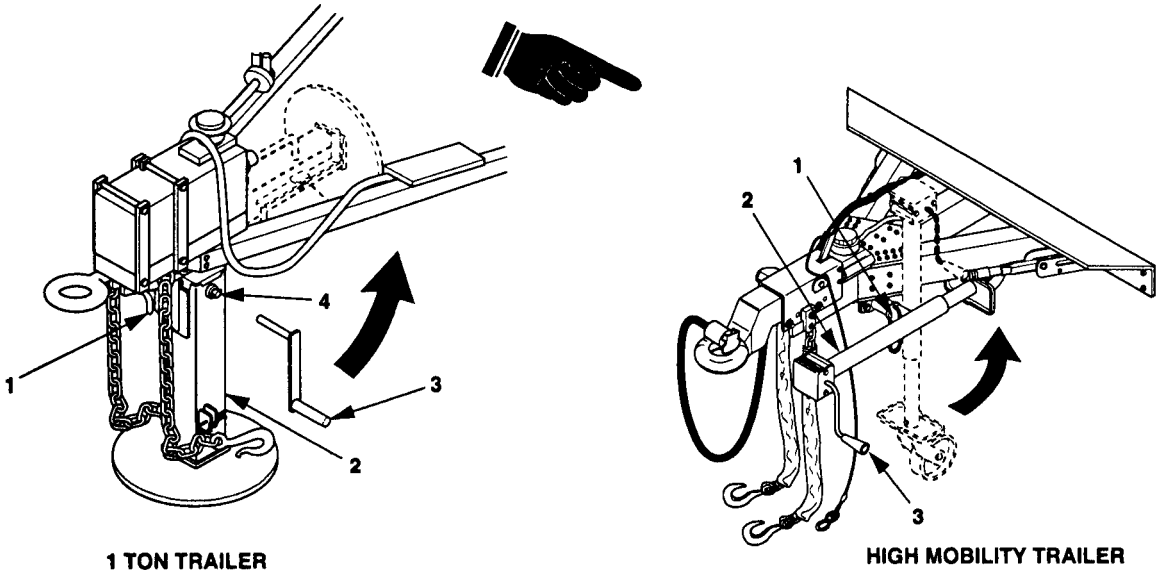

Figure 2-4. Lowering Trailer Front Support Leg.

(3) Lock support leg (2) in down position by pushing spring-loaded plunger or pin (1) in all the way.

NOTE

For 1 ton trailer, go to step (4). For high mobility trailer, go to step (5).

(4) Attach crank (3) to shaft (4) to level trailer.

(5) Turn crank (3) to level trailer.

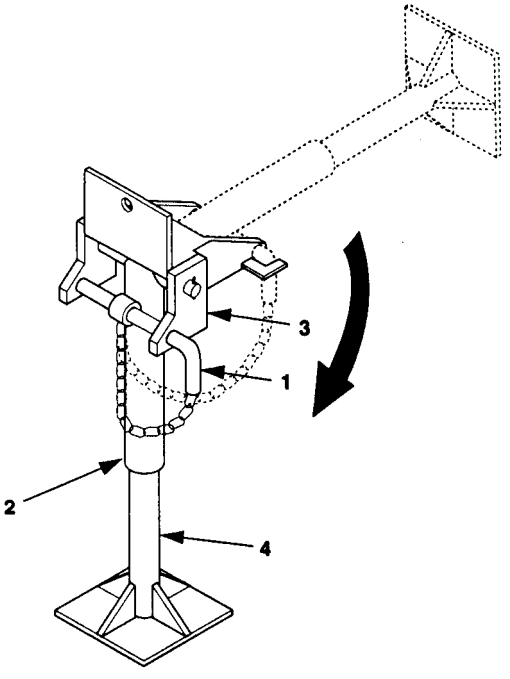

Figure 2-5. Rear Leveling-Support Jack.

(5) Refer to TM 9-2330-202-14&P (1 ton trailer) or TM 9-2330-392-14&P (high mobility trailer) and disconnect trailer from towing vehicle.

(6) Pull out pin (1, figure 2-5) that secures rear leveling-support jack (2) in travel position,

(7) Pull rear leveling-support jack (2) down. Insert pin (1) in bracket (3) to secure rear leveling-support jack (2) in down position.

(8) Turn leg base (4) until it makes firm contact with ground.

d. Remove fire extinguisher from bracket. Locate fire extinguisher on ground away from equipment.

2-3.3 Grounding of Generator Set. Ground the equipment in accordance with Army Field Manual Field Manual 20-31. Typical ground rod installations are shown in Figure 2-6. If a ground rod is used, install and connect it as follows:

NOTE

The Power Plant AN/MJQ-39 consists of two power units. One ground rod must be installed for each power unit.

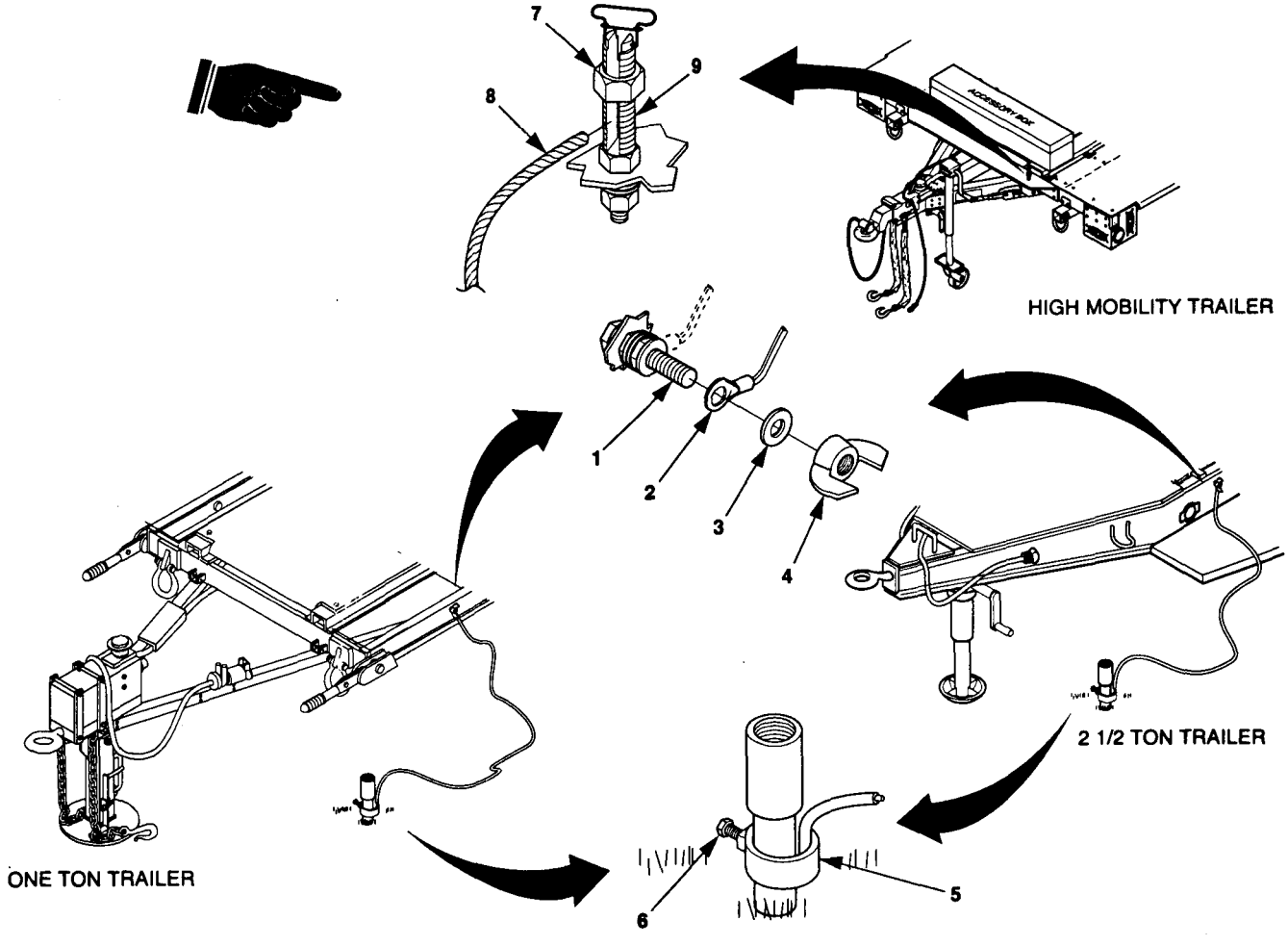

Figure 2-6. Typical Ground Rod Installations.

a. Remove ground rod, grounding strap, and slide hammer (figure 2-7) from accessory box. Perform assembly steps (1) through (4).

WARNING

Impact disk must be tightened to end of threads on rod. Also, lock washer and nut must be tightened firmly against impact disk. Failure to observe this warning could result in severe personal injury and/or death and damage to the equipment.

NOTE

The terminal lug supplied with the ground rod is too small. Use additional ground strap provided with power unit.

b. Assemble slide hammer as follows:

(1) Install impact disk (3, figure 2-7) on rod (4). Tighten impact disk to end of threads on rod (4).

(2) Install lock washer (2) and nut (l). Tighten nut (1) and lock washer (2) securely against impact disk (3).

NOTE

Nut (6) must be removed before positioning slide hammer.

(3) Position hammer (5) on rod (4). Install nut (6) and tighten to end of threads on rod (4).

c. Connect ground rod coupling (10) to ground rod (7) and screw slide hammer into coupling (10). Make sure that slide hammer rod (4) seats on ground rod (7).

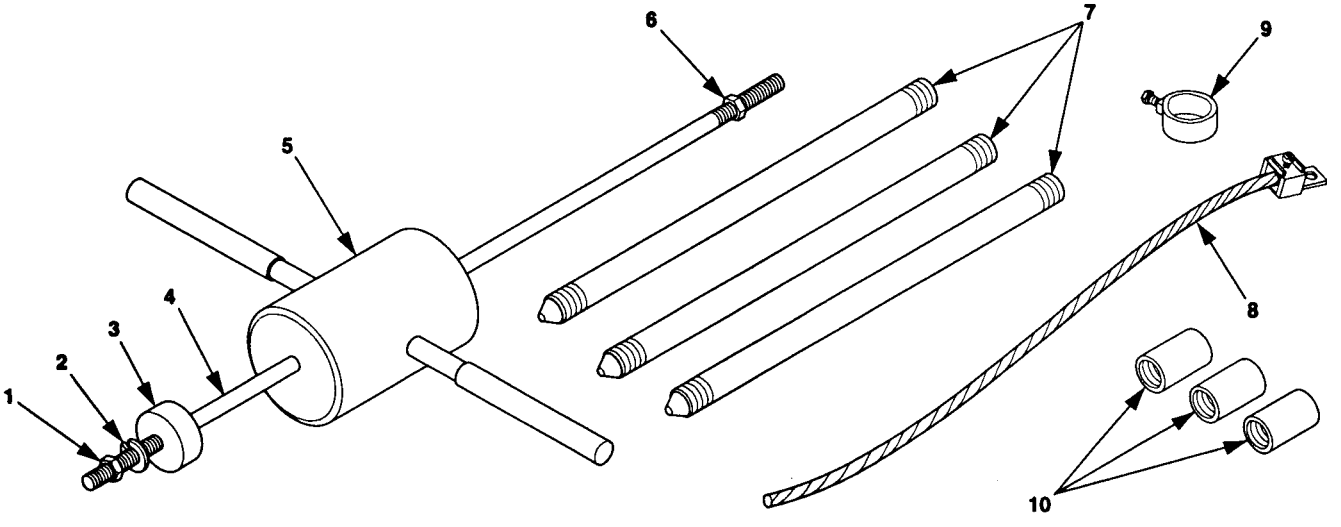

Figure 2-7. Ground Rod, Grounding Syrap, and Slide Hammer.

d. Drive ground rod into ground until coupling is just above surface.

d. Drive ground rod into ground until coupling is just above surface.

e. Remove slide hammer assembly and install another section of ground rod (7).

f. Install another coupling (10) and the slide hammer assembly. Drive ground rod down until new coupling is just above ground surface.

g. Repeat steps e and f until ground rod has been driven eight feet or deeper, providing an effective ground.

h. Connect clamp (9) and ground cable (8) to ground rod (7) and tighten clamp screw.

i. Connect ground cable (8, figure 2-7) to trailer as follows.

NOTE

Ground terminal on high mobility trailer is different than one used on other trailers.

(1) If the high mobility trailer (PU-801A) is being used, perform steps (5) through (7). Otherwise perform steps (2) through (4) and step (7).

(2) Remove and retain wing nut (4, figure 2-6) and washers (3) from trailer ground stud (1) and install ground cable terminal (2) to ground stud (1)

(3) Install washers (3) on ground stud (1).

(4) Install wing nut (4) on the ground stud (1) and tighten.

(5) Loosen nut (7) on high mobility trailer ground terminal (9).

NOTE

Ground terminal will have two cables in slot after the following step is performed.

(6) Insert wire (8) through slot of ground terminal (9) making sure that the ground wire from the generator remains in the slot.

(7) Insert ground cable end into ground cable clamp (5) and tighten clamp screw (6).

j. Disassemble slide hammer as follows:

(1) Remove nut (6, figure 2-7) from end of rod (4) and retain.

(2) Remove hammer (5) from rod (4) and thread nut (6) on end of rod to prevent loss.

(3) Store hammer (5) and rod (4) with assembled parts in accessory box.

2-3.4 Connecting Load and/or Paralleling Cables.

WARNING

Never attempt to connect or disconnect loadcables while the generator set is running. Failure to observe this warning could result in severe personal injury or death by electrocution.

NOTE

Before comecting the load, determine voltage and frequency requirements of the system or device that is being supplied with power. Refer to TM 9-6115-643-10 and verify that voltage reconnection board is in proper position for voltage requirements and the frequency select switch is in the proper position. If board requires repositioning notify next higher level of maintenance.

2-3.4.1 Power Unit. Refer to TM 9-6115-643-10 for installation of load cables.

2-8.4.2 Power Plant. Load may be connected to the switch box (figure 2-8) by either of two methods. One method is to connect the load cable to the J1 connector (6, figure 2-8). The other method is to connect load cables to the load terminals (1, 2, 3, 4, and 5, figure 2-8). Connect unit A to unit B as follows:

NOTE

A paralleling cable is furnished with each generator set. Cables are located in a storage box inside battery access doors.

a. Connect paralleling cables as follows:

(1) Connect one end of cable (13) to connector J3 (15) of the switch box located on unit A.

(2) Route the other end of cable (13) through power cable sock (10) and connect to connector J16 (8) on Unit B generator set.

(3) Connect the other paralleling cable (11) between the two paralleling receptacles (7) located on the generator set control panels.

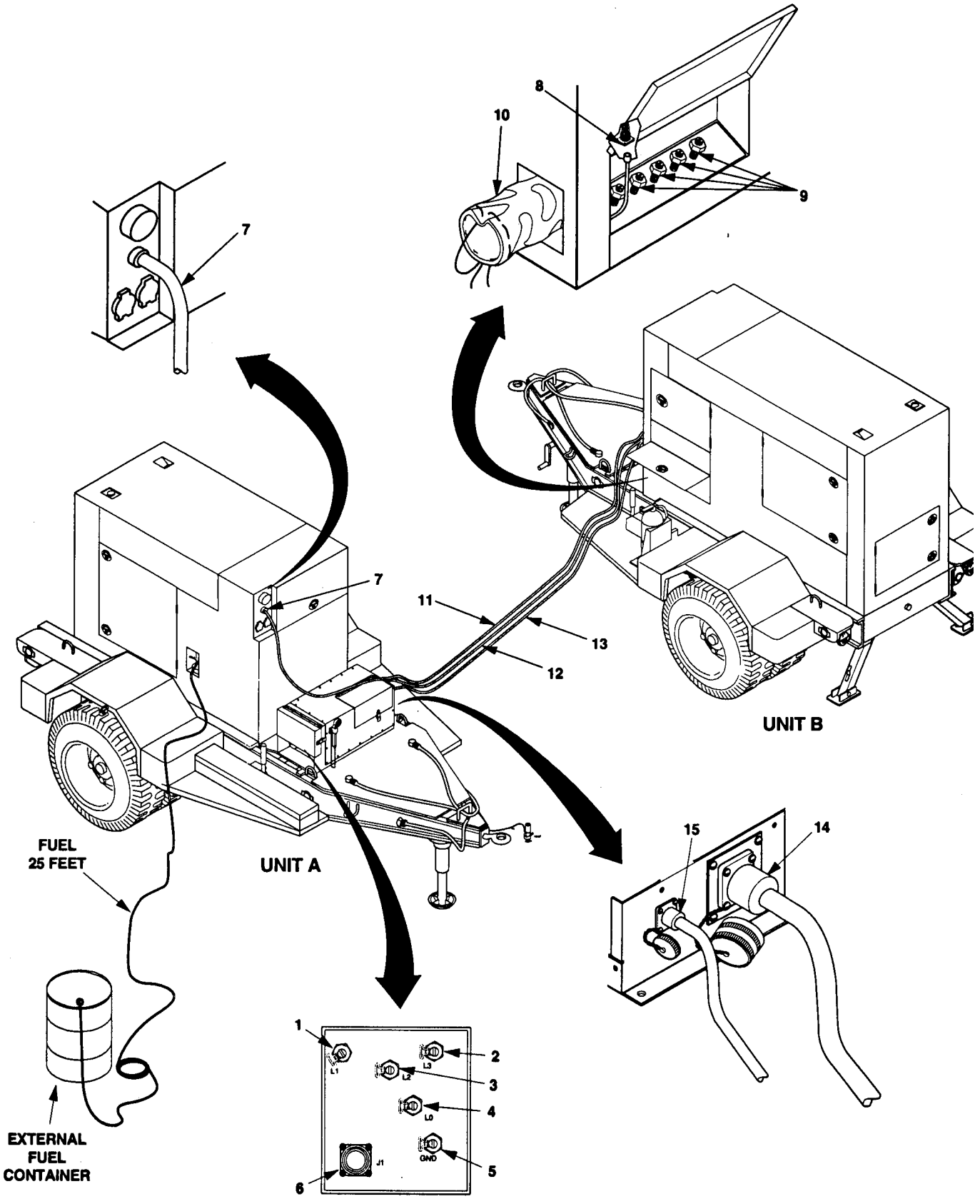

Figure 2-8. Connecting Power Plant.

b. Remove power cable (12) from fender and connect as follows:

(1) Connect the plug end of power cable (12) to comector J2 (14) of the switch box located on unit A

(2) Route the other end of cable (12) through power cable sock (10) and connect leads to appropriate load terminals (9) on unit B. Leads will be labeled with load terminal designations.

2-3.5 External Fuel Source. Each generator set has provisions for obtaining fuel from an external source, such as a 55-gallon diesel fuel container. This enables operation for long intervals without frequent refilling of the fuel tanks. To use an external fuel source:

WARNING

Before performing any maintenance that requires climbing on or under trailer, make sure that trailer handbrakes are set and trailer is supported to prevent rolling or tipping. Injury to personnel could result from trailer suddenly rolling or tipping.

a. Place external fuel source away, but no more than 25 feet (7.6 meters) away, from the equipment.

b. Remove fuel container adapter (figure 2-9) from accessory box. The fuel container adapter consists of strainer clamp (1), adapter (2), pipe (3), and extension pipe (4).

c. Make sure that the fuel container adapter components are clean.

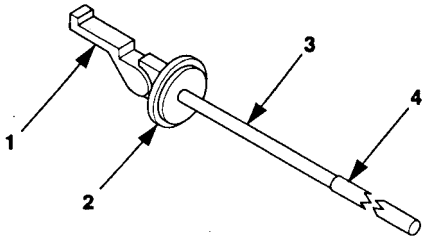

Figure 2-9. Fuel Container Adapter.

d. Thread fuel pipe (3) into adapter (2). Thread extension pipe (4) into fuel pipe (3).

e. Remove auxiliary fuel hose from generator set.

f. Make sure that fittings on auxiliary fuel hose are clean.

g. Thread one end of auxiliary fuel hose into fuel container adapter fitting and tighten.

h. Connect free end of auxiliary fuel hose to generator set external fuel supply connection and tighten. Connection is located on generator set, near fuel tank filler cap.

i. Insert fuel container adapter into external fuel source. Secure fuel container adapter by pressing down on strainer clamp (1).

2-4 INITIAL ADJUSTMENTS, CHECKS, AND SELF TEST.

Refer to TM 9-6115-643-10 for initial adjustments, checks and self test.

2-5 OPERATING PROCEDURES.

2-5.1 Generator Set Operating Procedures. Refer to TM 9-6115-643-10 for generator set operating procedures.

2-5.2 Trailer O eratin Procedures. Refer to TM 9-2330-202-14&P for 1 ton, TM 9-2330-205-14&P for 2 1/2 ton, and TM 9-2330-392-14&P for high mobility trailer operating procedures.

2-5.3 Power Plant Switch Box Operating Procedures. The power plant can be operated either in a single generator set configuration or parallel operation of the generator sets. The following paragraphs provide operating procedures for a single generator, generators in parallel, or transfer of the load from one generator to another.

2-6.3.1 Operating a Single Generator Set.

WARNING

Do not operate equipment until it is properly grounded, and no load terminals are shorted. Failure to observe this warning can result in severe personal injury or death.

NOTE

Before operating generator sets, all connections must be made to the switch box assembly.

a. Perform the Preventive Maintenance Checks and Services (PMCS) listed as Before in table 2-2.

b. Release the clamping catch (8, figure 2-10) and open the control panel access cover (7).

c. To start either generator set, rotate the MASTER Switch to START position. Hold MASTER switch in START position until oil pressure reaches 25 psi (172 kPA), and voltage reaches the appropriate required value.

d. Release MASTER Switch to PRIME AND RUN Position.

e. Readjust VOLTAGE potentiometer to required voltage.

f. Readjust FREQUENCY potentiometer to required frequency.

g. Place AC CIRCUIT INTERRUPTER switch in the closed position.

h. Check switch box to make sure that ON light (1 or 4) is lit for the generator set just started.

i. At the switch box, set the ON/OFF switch (3 or 6) in the ON position (ON LINE light should light). Generator is now supplying power to the load.

j. Close the control panel access cover (7) and secure with clamping catch (8).

k. Perform the PMCS listed as DURING in table 2-2.

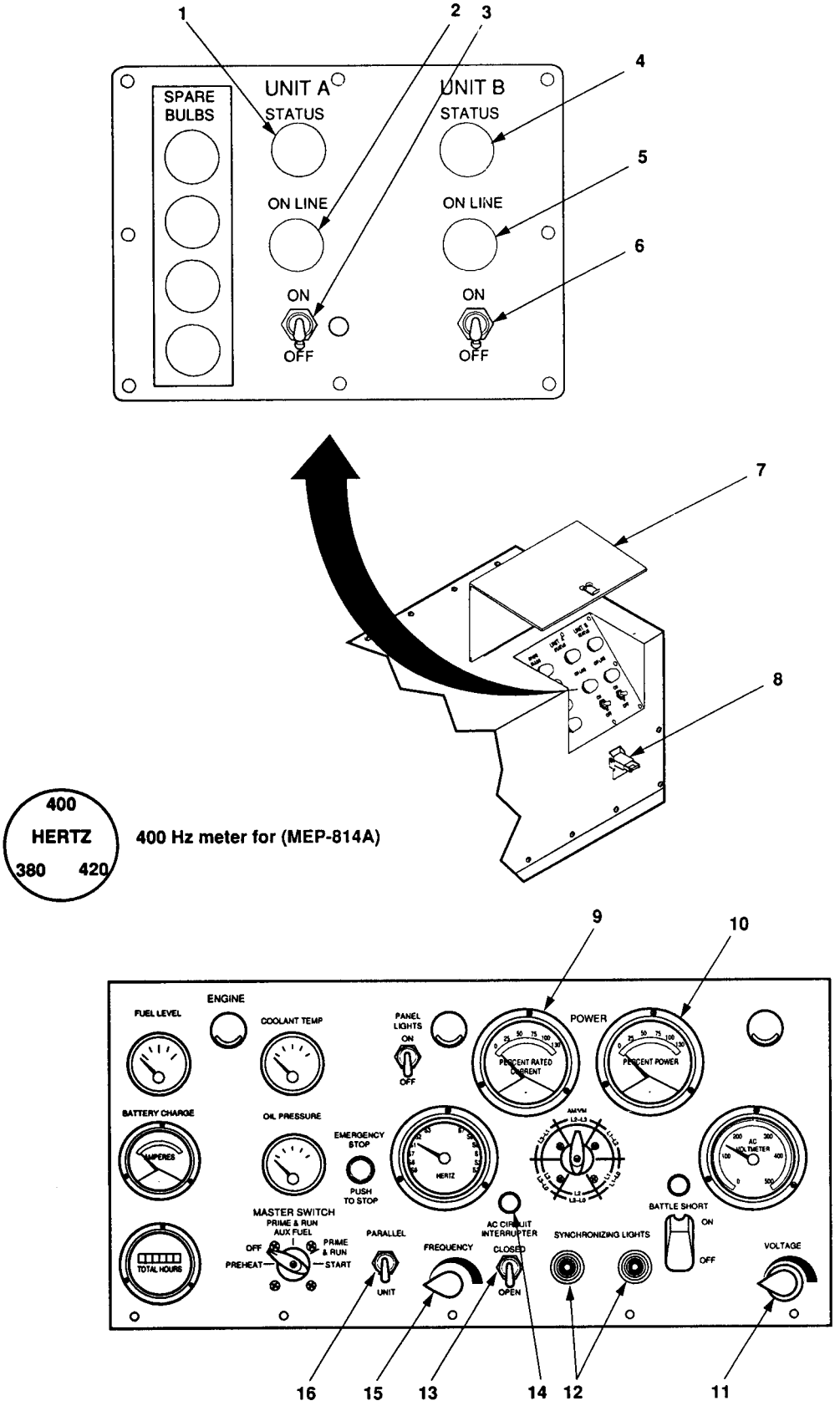

Figure 2-10. Power Plant Operation.

1. To shut down generator set, place AC CIRCUIT INTERRUPTER switch in the OPEN position.

m. On the switch box place ON LINE switch for the generator which is on line (3 or 6) to the OFF position.

NOTE

At this time, allow generator set to operate five minutes with no load applied.

n. On the generator set control panel rotate the MASTER SWITCH to the OFF position.

2-5.3.2 Operating Generator Sets in Parallel. The generator sets can be operated in parallel through the switch box or at the generator set load terminals. When paralleling at the generator set load terminals, refer to paralleling procedures in TM 9-6115-643-10. When paralleling at the switch box, perform the following procedures:

WARNING

Prior to making any connections for parallel operation, ensure that there is no input to the load and that the generator sets are shut down. Failure to observe this warning can result in serious injury or death by electrocution.

WARNING

Never attempt to start the generator set if is not properly grounded. Failure to observe this warning can result in serious injury or death by electrocution.

a. Ensure that load requirement is equal to or below the combined rated capacity of the two generator sets.

b. Perform the Preventive Maintenance Checks and Services (PMCS) listed as BEFORE in table 2-2.

c. Install load and paralleling cables.

CAUTION

Do not close the AC CIRCUIT INTERRUPTER switch (13) on either of the generator sets or close the load contactor at load until specifically directed to do so. Closing any of these devices at any other time may severely damage one or both of the generator sets.

d. Refer to paragraph 2-5.3.1 (step c through g) to a generator set and bring it on line.

e. On operating generator set (generator set 1) position UNIT-PARALLEL switch (16) to PARALLEL.

f. Start generator set 2 and adjust voltage and frequency to match generator set 1.

G. At switch box, set generator set 2 ON-OFF switch (3 or 6) to ON (Switch box STATUS & ON-LINE lights for both generators should be lit).

h. At generator set 2 control panel:

(1) Set UNIT-PARALLEL switch (16) to PARALLEL. Both SYNCHRONIZING LIGHTS (12) should be going bright to dark together.

CAUTION

If SYNCHRONIZING LIGHTS on generator set 2 do not go bright and dark in unison, the phasing is wrong. Shut down generator sets and check that load cables are connected properly. Failure to observe this caution can result in damage to generator sets.

(2) Increase frequency until SYNCHRONIZING LIGHTS (12) blink together one or more times per second.

(3) Decrease frequency until SYNCHRONIZING LIGHTS (12) blink together once every 3-4 seconds.

CAUTION

Check that load contactor at load is open before attempting to place generators on line. Failure to observe this caution can result in damage to generator sets.

(4) When both SYNCHRONIZING LIGHTS (12) are dark, position and hold AC CIRCUIT INTERRUPTER switch (13) of generator set 2 in the CLOSED position until indicator light (14) goes out. SYNCHRONIZING LIGHTS (12) should go out (both generators are now operating in parallel with no load).

i. Rotate FREQUENCY adjust potentiometer (15) of generator set 1 until Percent Power meter (10) reads approximately 0.

j. Rotate VOLTAGE adjust potentiometer (11) of generator set 1 until AC Amperes meter (9) reads approximately 0.

k. Close the load contactor at the load.

NOTE

If the REVERSE POWER indicator on the Fault Indicator panel of either generator set lights, and the AC Circuit Interrupter relay opens, open the load contactor at load and desynchronize the generator sets (Repeat the necessary steps d through j above).

l. Compare AC Amperes meter (9) readings of both generator sets. If readings are not within 10 percent, notify next higher level of maintenance.

m. Compare Percent Power meter (10) readings of both generator sets. If readings are not within 10 percent, notify next higher level of maintenance.

n. Close control panel access cover (7) and secure with clamping catch (8).

o. Perform the PMCS listed as DURING in table 2-2.

2-5.3.3 Removal from Parallel Operation.

WARNING

If necessary to move a generator set which has been operating in parallel with another generator set, shut down remaining generator set connected to the load, prior to removing load and ground cables. Failure to observe this warning can result in injury or death by electrocution.

CAUTION

Prior to removal of generator set from parallel operation, make sure load does not exceed full load rating of generator set remaining on line. Failure to observe this caution can result in damage to generator set.

a. At the control panel of the generator set that is to be taken off line, position AC CIRCUIT INTERRUPTER switch (13) in the OPEN position until indicator (14) goes out.

b. Set UNIT-PARALLEL switch (16) to UNIT.

c. On the switch box place the ON LINE switch in the OFF position.

d. On the operating generator set control box assembly rotate the MASTER switch to the OFF position.

e. At the control panel of the running generator set, place the UNIT-PARALLEL switch to UNIT.

f. Perform the PMCS listed as AFTER in Table 2-2 for the generator set that was shut down.

2-5.3.4 Load Transfer Procedures (Sets connected for parallel operation).

a. One generator set (generator set 1) should already be on line and supplying power to the load.

b. For the generator set not running (generator set 2), perform the PMCS listed as BEFORE in table 2-2.

c. On operating generator set (set 1), set UNIT-PARALLEL switch (16, figure 2-11) to PARALLEL.

d. Start generator set 2. Adjust voltage and frequency to match generator set 1.

e. At switch box, set generator set 2 ON-OFF switch (3 or 6) to ON (Switch box STATUS and ON LINE lights for both generator sets should be lit).

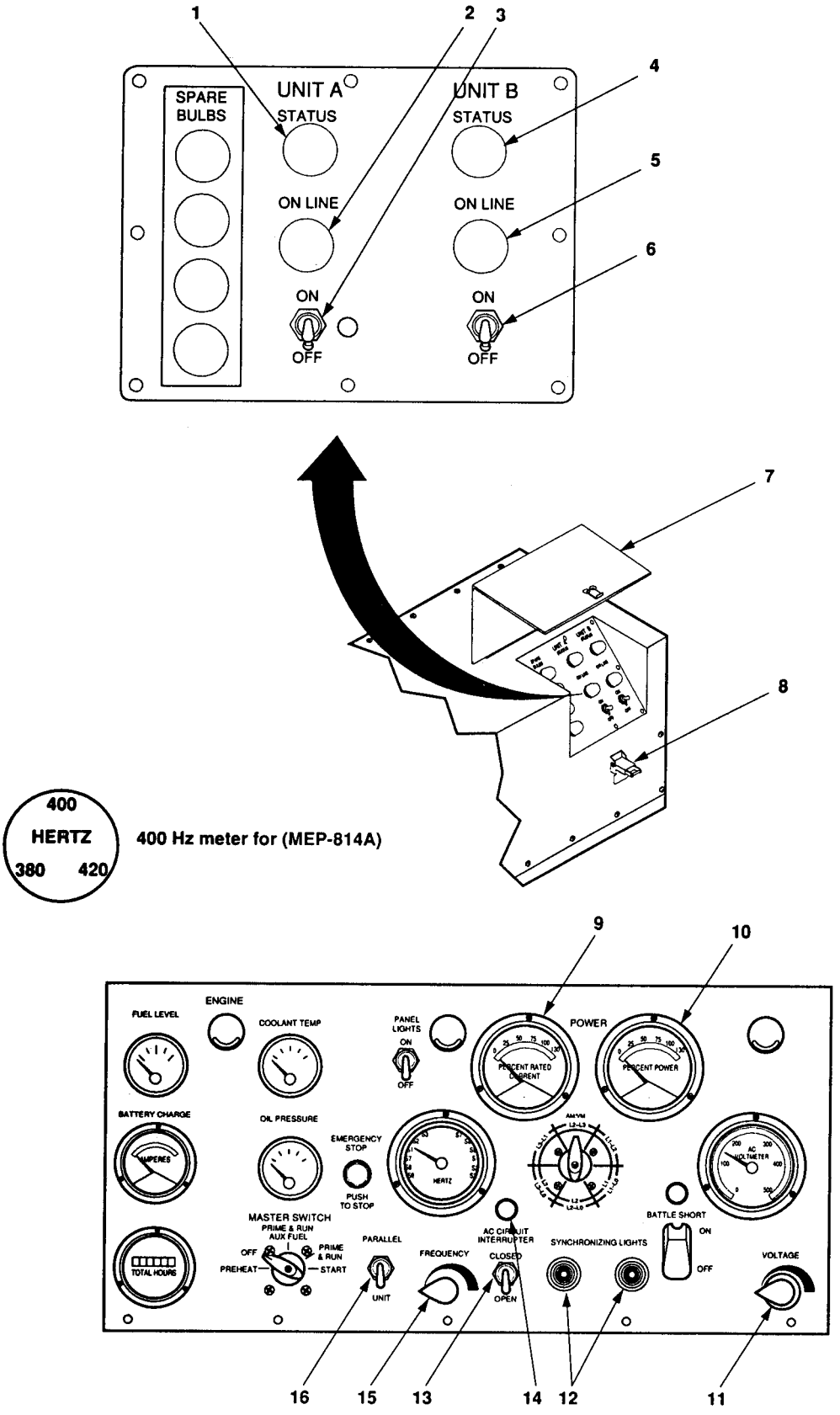

Figure 2-11. Load Transfer Operation.

f. At generator set 2 control panel:

(1) Set UNIT-PARALLEL switch (16) to PARALLEL. Both SYNCHRONIZING LIGHTS (12) should be going bright to dark together.

CAUTION

If synchronizing lights on generator set 2 do not go bright and dark in unison, the phasing is wrong. Shut down generator sets and check that load cables are connected properly. Failure to observe this caution can result in damage to generator sets.

(2) Increase frequency until SYNCHRONIZING LIGHTS (12) blink together one or more times per second.

(3) Decrease frequency until SYNCHRONIZING LIGHTS (12) blink together once every 3-4 seconds.

(4) While both synchronizing lights are dark, position and hold AC CIRCUIT INTERRUPTER switch of generator set 2 in the CLOSED position until indicator lights. SYNCHRONIZING LIGHTS should go out (both generators are now operating in parallel).

g. Once both of the generator sets are on line and supplying power to the load in parallel, perform the following steps to transfer the load.

(1) At the control panel of the generator set that is to be taken off line (generator set 1), set the AC CIRCUIT INTERRUPTER switch to the OPEN position. Set UNIT-PARALLEL switch to UNIT, MASTER SWITCH to OFF.

(2) At the control panel of the running generator set (generator set 2), place the UNIT-PARALLEL switch to UNIT. The load has now been transferred.

h. Perform the generator PMCS listed as DURING for generator set 2 and AFTER for generator set 1.

2-6.3.5 Stopping Generator Set.

a. Set the switch box ON/OFF switch (3 or 6, figure 2-11) for the generator set to be stopped to OFF position.

b. Stop the generator set in accordance with TM 9-6115-641-10.

c. Perform the generator set PMCS listed as AFTER in table 2-2.

2-6 IDENTIFICATION AND INFORMATION PLATES.

2-6.1 PU-800 Identification/Transportation Data Plate. See figure 2-12. This plate is located on the trailer body.

2-6.2 PU-801 Identification/Transportation Data Plate. See figure 2-13. This plate is located on the trailer body.

2-6.3 PU-802 Identification/Transportation Data Plate. See figure 2-14. This plate is located on the trailer body.

2-6.4 AN/MJQ-39 Identification/Transportation Data Plate. See figure 2-15 and figure 2-16. This plate is located on the trailer body.

2-6.5 Power Plant Instruction Plate. See figure 2-17. This plate covers power plant operating procedures for AN/MJQ-39. It is located inside of the switch box cover.

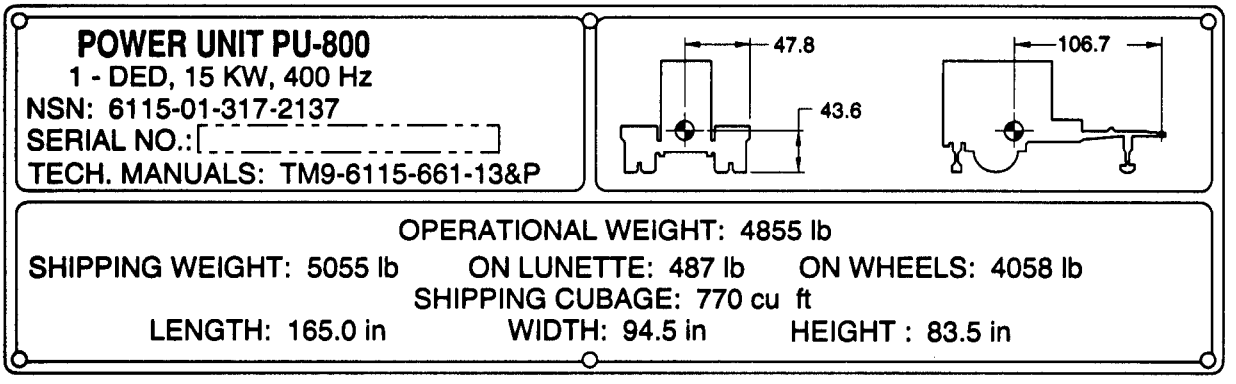

Figure 2-12. PU-800 Identification/Transportation Data Plates.

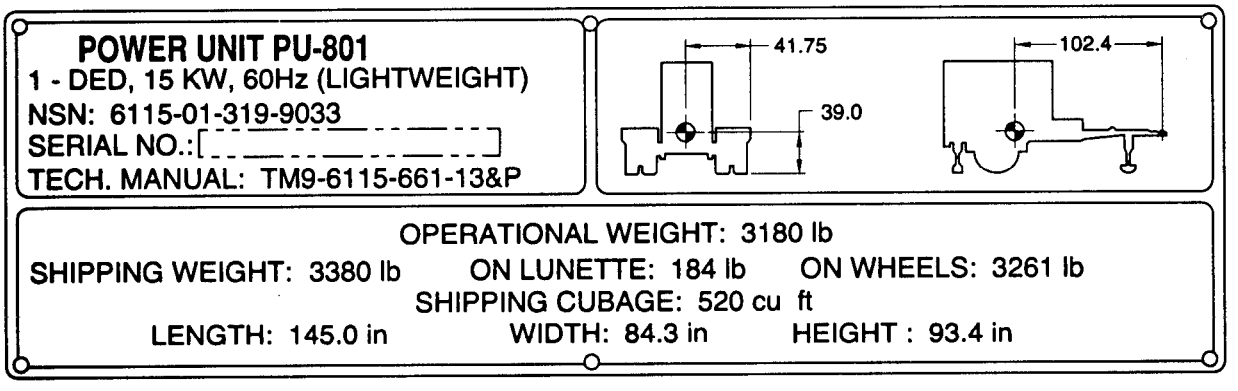

Figure 2-13. PU-801 Identification/Transportation Data Plates.

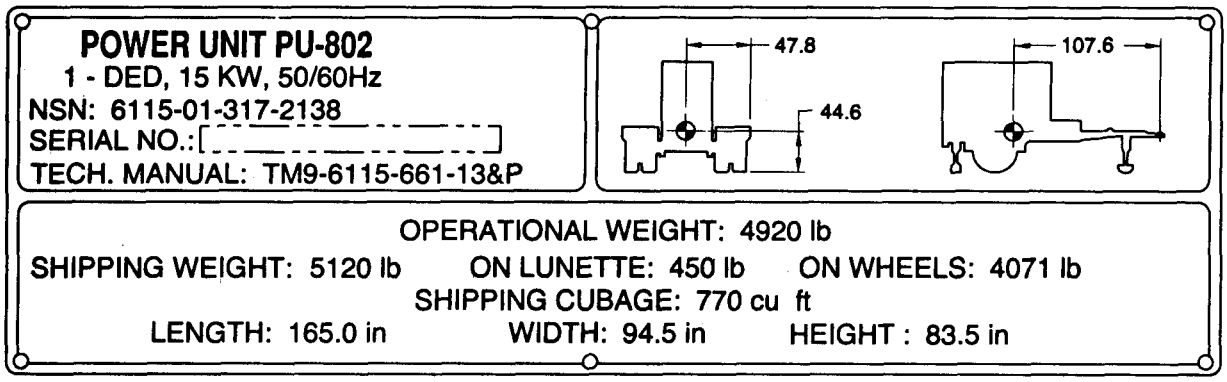

Figure 2-14. PU-802 *Identification/Transportation Data Plates.*

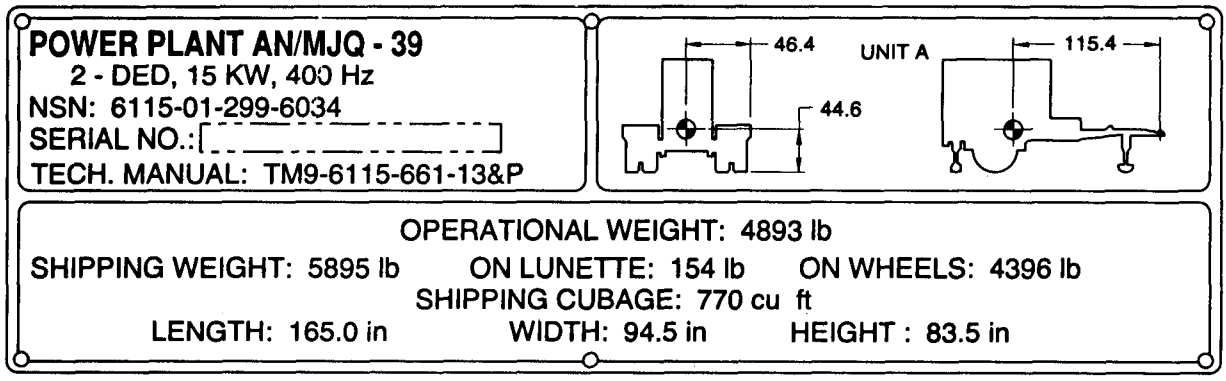

Figure 2-15. AN/MJQ-39 Unit A identification/Transportation Data *Plates.*

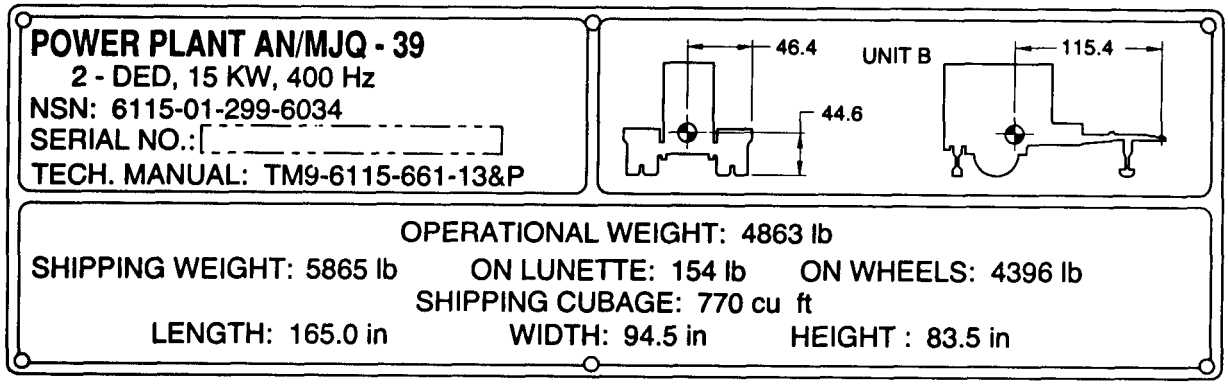

Figure 2-16. AN/MJQ-39 Unit B identification/Transportation Daia Plates.

POWER PLANT OPERATING PROCEDURES

BEFORE OPERATION

1. CHECK/SERVICE BOTH GEN SETS BEFORE OPERATION. CONNECT "GND" TERMINAL TO GROUND. CONNECTCONTACTOR POWER CABLE.

INDICATOR LIGHTS

1. STATUS LIGHT, INDICATES LINE BETWEEN GEN AND SW BOX IS HOT.
2. ON LINE LIGHT, INDICATES SWITCH BOXCONTACTOR IS CLOSEDFOR INDICATED GEN.

OPERATING PROCEDURES

1. START EITHER GEN. ADJUSTVOLTAGEAND FREQUENCY.
2. Pm GEN "CKT INTRPT SW" IN "CLOSED" POSITION. (SWITCH BOX "STATUS" LIGHT SHOULD LIGHT.)
3. AT SWITCH BOX, SET “ON-OFF” SWITCH TO “ON”. (“ON LINE” LIGHT SHOULD LIGHT.)

LOAD TRANSFER PROCEDURES (SETS CONNECTED FOR PARALLEL OPERATION PER TM)

1. ON “OPERATING" GEN, (GEN NO. 1) SET “UNIT-PARALLEL” SWITCH TO “PARALLEL”.
2. START GEN NO. 2. ADJUST VOLTAGE AND FREQUENCY TO MATCH GEN NO. 1.
3. AT SW BOX, SET GEN NO. 2 “ON-OFF” SWITCH TO “ON”. (“ON LINE” AND “STATUS” LIGHT SHOULD LIGHT.)
4. AT GEN NO. 2, SET “UNIT-PARALLEL” SWITCH TO “PARALLEL”. BOTH “SYNCHRONIZING” LIGHTS SHOULD BE GOING BRIGHT TO DARK TOGETHER.
5. INCREASE FREQUENCY UNTIL “SYNCHRONIZING” LIGHTS BLINK TOGETHER ONE OR MORE TIMES PER SECOND.
6. DECREASE FREQUENCY UNTIL LIGHTS BLINK TOGETHER ONCE EVERY 3-4 SECONDS.
7. WHEN LIGHTS ARE DARK, SET GEN NO. 2 “CKT INTRPT SWITCH” TO “CLOSE”, GEN CONTACTOR LIGHT SHOULD LIGHT AND “SYNCHRONIZING” LIGHTS SHOULD GO OUT.
6. AT GEN NO. 1, SET “CKT INTRPT SWITCH” TO “OPEN”, SET “UNIT-PARALLEL” SWITCH TO “UNIT”. TURN “MASTER” SWITCH TO “STOP”. (AT SWITCH BOX, “ON LINE” AND “STATUS” LIGHTS FOR GEN NO. 1 SHOULD GO OFF.)
9. AT GEN NO. 2, SET “UNIT-PARALLEL” SWITCH TO “UNIT”.

Figure 2-17. Power Plant Instruction Plate.

2-6.6 PU-801A Shipping Data/Identification Plate. Refer to figure 2-17.1. This plate is located on the front of curbside fender.

2-6.7 PU-601A Trailer Chassis Identification Plate. Refer to figure 2-17.2. This plate is located on curbside tow bar.

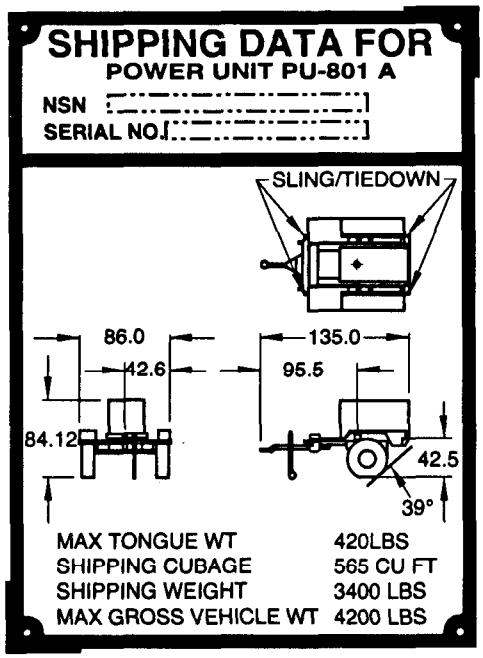

Figure 2-17.1. PU-801A Shipping Dots/Identification Plate.

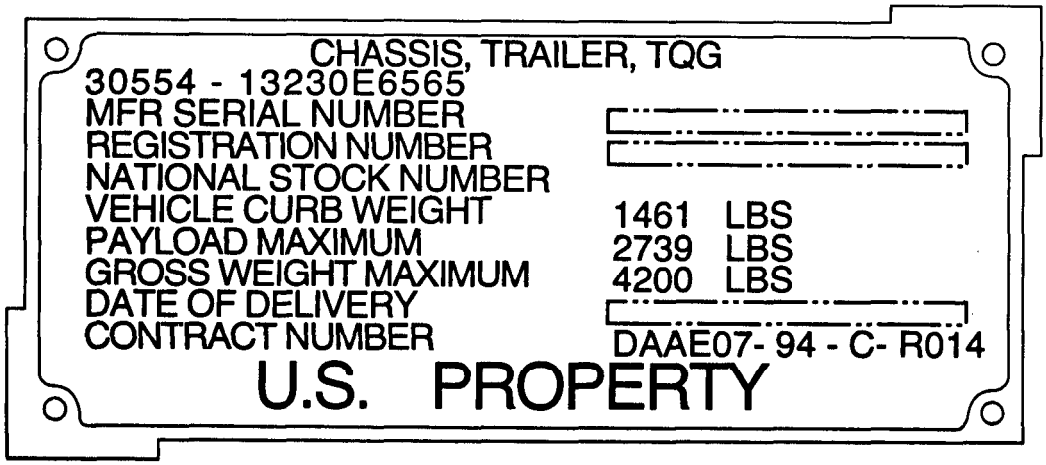

Figure 2-17.2. PU-801A Trailer Chassis Data Plate.

2-7 PREPARATION FOR MOVEMENT.

2-7.1 Shut Down Generator Set. Refer to paragraph 2-5.3.1 and stop both generator sets.

2-7.2 Disconnecting Load and/or Paralleling Cables.

WARNING

Never attempt to connect or disconnect load cables while the generator is running. Failure to observe this warning could result in severe personal injury or death by electrocution.

NOTE

Before connecting the load, determine voltage and frequency requirements of the system or device that is being supplied with power. Refer to TM 9-6115-643-10 and verify that voltage reconnection board is in proper position for voltage requirements and the frequency select switch is in the proper position. If board requires repositioning notify next higher level of maintenance.

a. Disconnect power cable W19 from both generator sets.

b. Disconnect parallel cables from both units.

2-7.2.1 Power Unit. Refer to TM 9-6115-643-10 for removal of load cables.

2-7-2.2 Power Plant. Load may be connected to the switch box (figure 2-18) by either of two methods. One method is to connect the load cable to the J1 connector (6). The other method is to connect load cables to the load terminals (1, 2, 3, 4, and 5). Disconnect the load cable using the appropriate method. Disconnect unit A from unit B as follows:

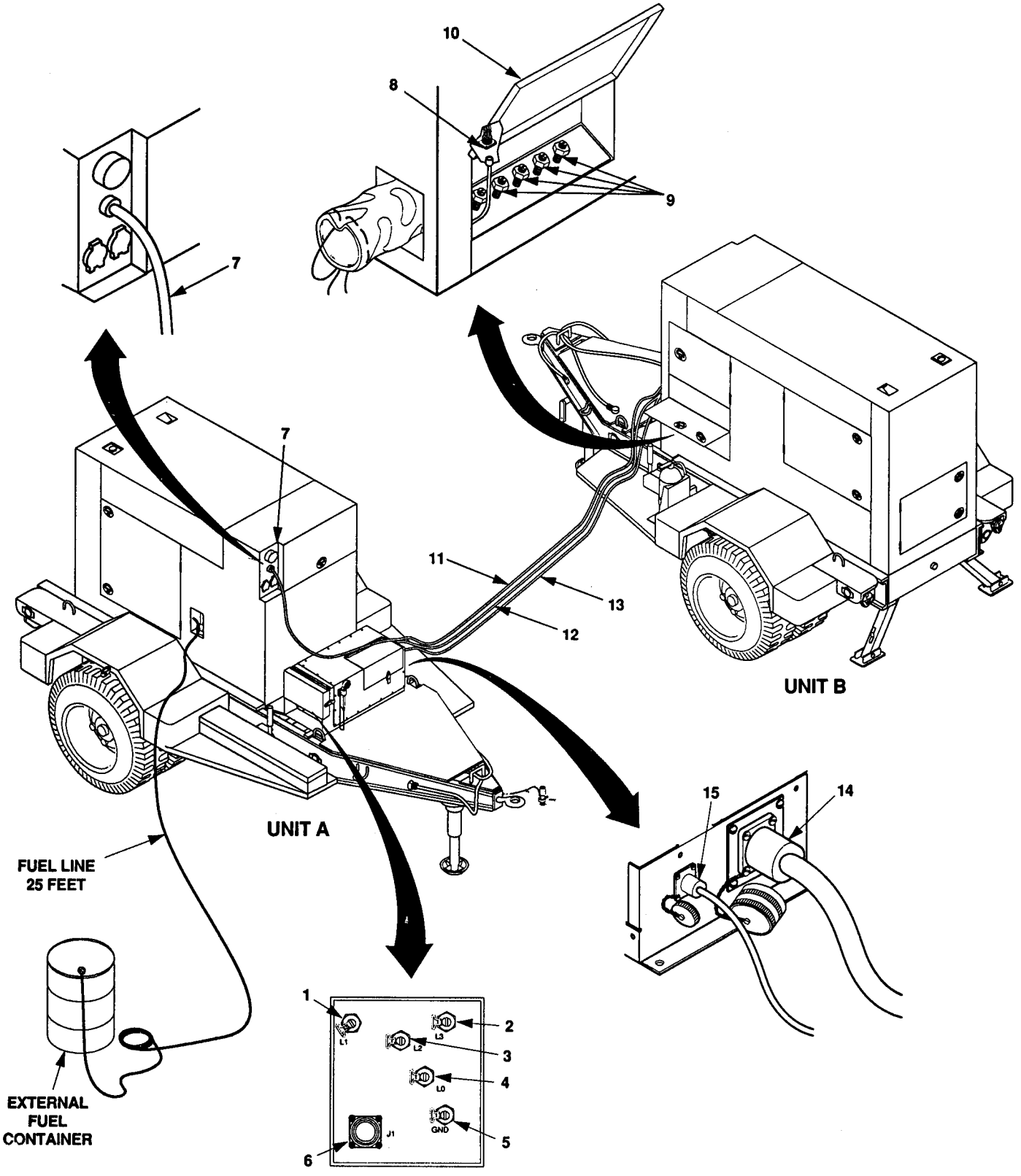

Figure 2-18. Disconnection of Power Plant.

a. Disconnect power cable (12) as follows:

(1) Disconnect leads from load terminals (9) and remove from power cable sock (10).

(2) Disconnect plug end of power cable (12) from connector J2 (14).

b. Disconnect paralleling cables as follows:

(1) Disconnect paralleling cables (11) from paralleling receptacles (7) on both generator sets. Store paralleling cable with unit B generator set.

(2) Disconnect end of cable (13) from J16 (8) on unit B generator set and remove from power cable sock (10).

(3) Disconnect the other end of cable (13) from connector J3 (15) of the switch box located on unit A. Store paralleling cable with unit A generator set.

2-7.3 Disconnect Ground Cable. Disconnect ground cable as follows:

a. Using slide hammer, remove ground rod as follows:

(1) Loosen clamp screw (1, figure 2-19) and remove ground cable.

(2) If disconnecting ground cable from high mobility trailer (PU-801A), perform steps (5) through (17). For other trailers, perform steps (3) and (4) and then steps (7) through (17).

(3) Remove wing nut (2), washer (3), and terminal (4) from ground stud (5). Roll up ground cable and store in accessory box.

(4) Install washer (3) and wing nut (2) removed in step a.(2) on ground stud (5).

(5) Loosen nut (10) on ground terminal (12) and remove ground cable (11) going to ground rod (8).

(6) Tighten nut (10) making sure that ground cable going to generator is still installed in slot of ground terminal (12).

(7) Remove ground rod coupler (6) and ground cable clamp (7) from ground rod section (8).

(8) Install ground rod coupler (6) on ground rod section (8).

WARNING

Connect nuts securely to slide hammer. Faulty connections could result in death or serious injury.

CAUTION

Impact disk must be tightened to end of threads on slide hammer. Also, lock washer and nut must be tightened firmly against impact disk. If not tightened properly, the threads and impact disk could be damaged.

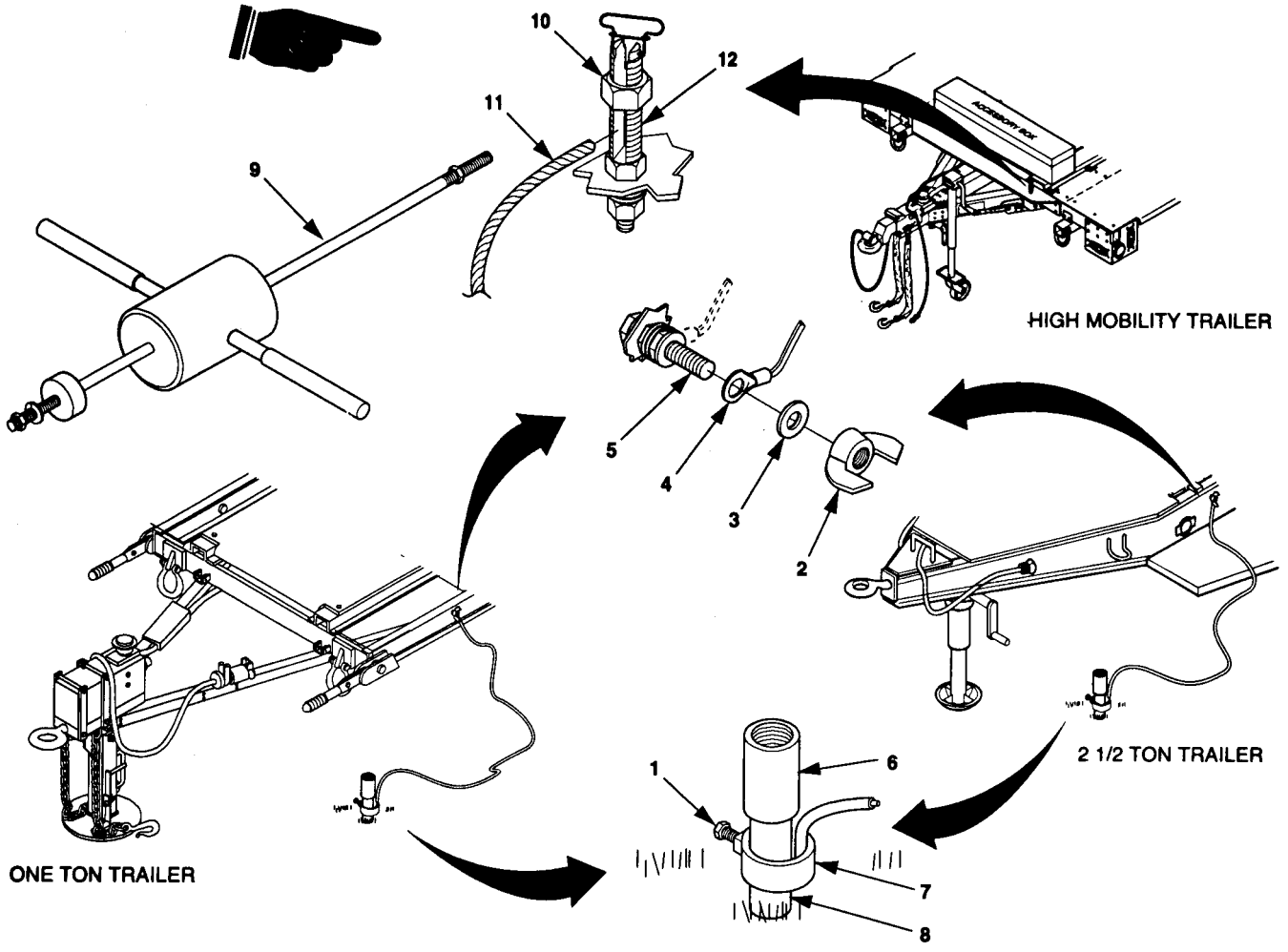

Figure 2-19. Ground Rod Removal.

(9) Refer to paragraph 2-3.3, step b and assemble slide hammer.

(10) Connect slide hammer end (9) to ground rod coupler (6).

(11) Using slide hammer, pull ground rod out of the ground until the second coupler is exposed.

(12) Disconnect slide hammer (9) from top of ground rod coupler (6).

(13) Disconnect top ground rod section from second ground rod section.

(14) Repeat steps 7 through 10 for the second and third ground rod sections.

(15) Remove ground rod couplers (6) from each ground rod section (8).

(16) Clean ground rod sections (8) and ground rod couplers (6).

(17) Refer to paragraph 2-3.3, step j and disassemble slide hammer.

2-7.4 Disconnect External Fuel Source. Disconnect auxiliary fuel hose as follows:

a. Disconnect the auxiliary fuel hose (3, Figure 2-20) from the generator set external fuel supply connector. Elevate the free end of the auxiliary fuel hose to drain fuel back into the external fuel source. Place free end of auxiliary fuel hose on a clean surface.

b. Disconnect auxiliary fuel hose from fitting on container adapter (1).

c. Store auxiliary fuel hose in the generator set storage compartment located behind the battery access door.

d. Store the container adapter in the accessory box.

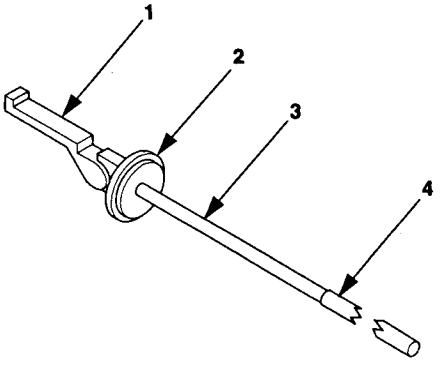

Figure 2-20. Auxiliary Fuel Source (Typical)

Section IV. OPERATION UNDER UNUSUAL CONDITIONS

2-8 GENERATOR SETS.

Refer to TM 9-6115-643-10.

2-9 TRAILER.

Refer to TM 9-2330-205-14&P for the 2 1/2 ton trailer, TM 9-2330-202-14&P for the 1 ton trailer, and TM 9-2330-392-14&P for the high mobility trailer.

CHAPTER 3

OPERATOR MAINTENANCE

Subject Index Page

Section I. OPERATOR LUBRICATION

3-1 LUBRICATION.

Lubrication instructions for the generator set are contained in LO 9-6115-643-12. Lubrication instructions for the 1 ton trailer are contained in TM 9-2330-202-14&P; the 2 1/2 ton trailer lubrication instructions are in TM 9-2330-205-14&P; and the high mobility trailer instructions are in TM 9-2330-392-14&P.

Section II. TROUBLESHOOTiNG

3-2 TROUBLESHOOTING.

Refer to TM 9-6115-643-10 for generator set troubleshooting instructions, TM 9-2815-254-10 for engine troubleshooting instructions, and refer to TM 9-2330-205-14&P for trailer troubleshooting instructions. The symptom index for the power plant lists faults associated with switch box operation. Figures 3-1,3-2, 3-3, and 3-4 provide a go-no-go flowchart of each malfunction. Each malfunction listed includes a reference to the applicable figure that contains a chart to help you determine probable causes and corrective actions to take. The symptom index cannot list all faults that may occur, nor all the tests or inspections and corrective actions. If a malfunction is not listed or cannot be corrected by listed corrective actions, notify next higher level of maintenance for assistance.

SYMPTOM INDEX

Section III. MAINTENANCE PROCEDURES

3-3 OPERATOR MAINTENANCE.

Refer to TM 9-6115-643-10 for generator set maintenance instructions, and to TM 9-2330-202-14&P, TM 9-2330-205-14&P, and TM 9-2330-392-14&P for trailer maintenance instructions, The maintenance functions for the power units/power plant are provided in paragraphs 3-4 and 3-5.

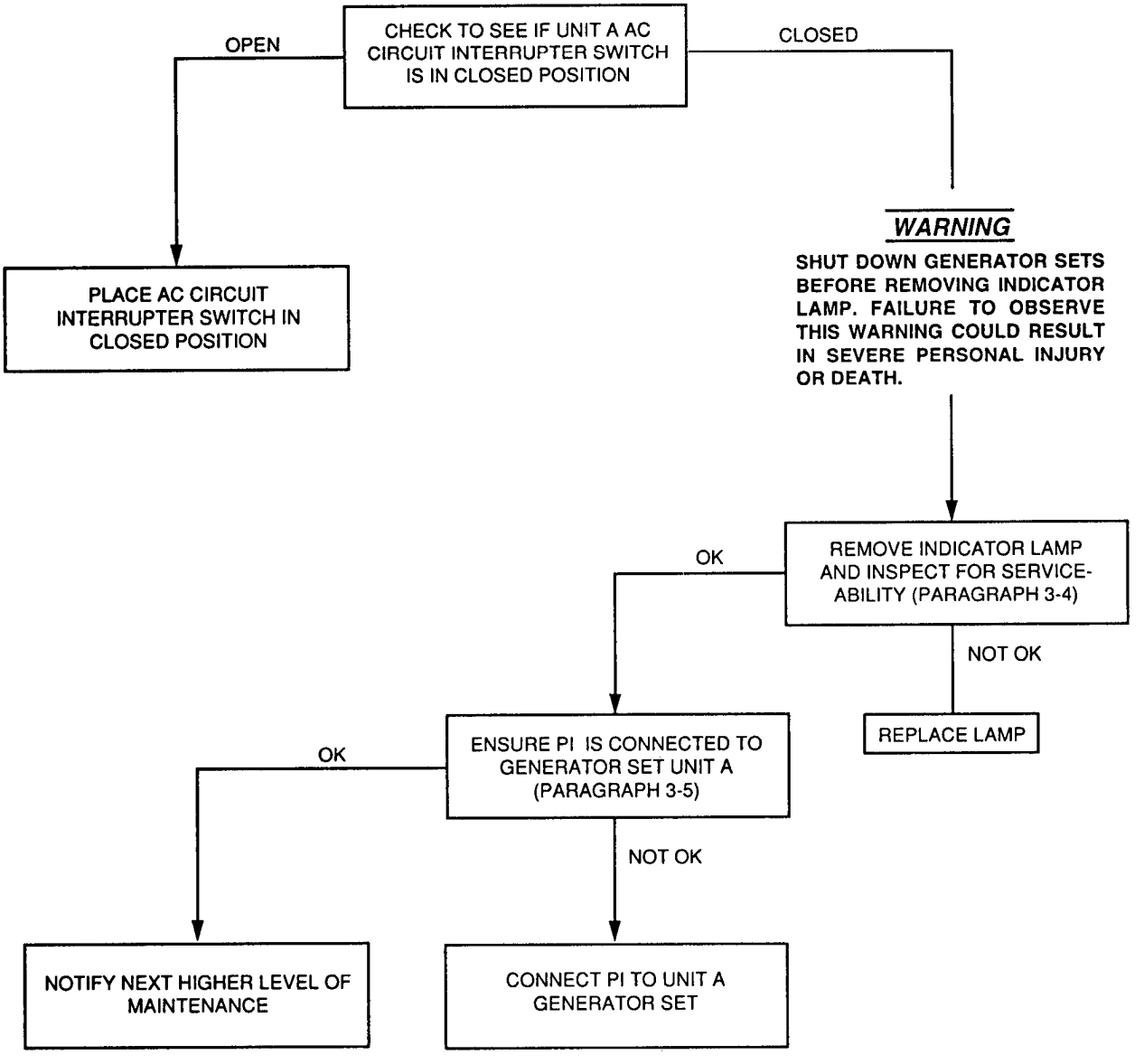

Figure 3-1. Unit A ON Indicator Lamp Fails to Light With Generator Set Running.

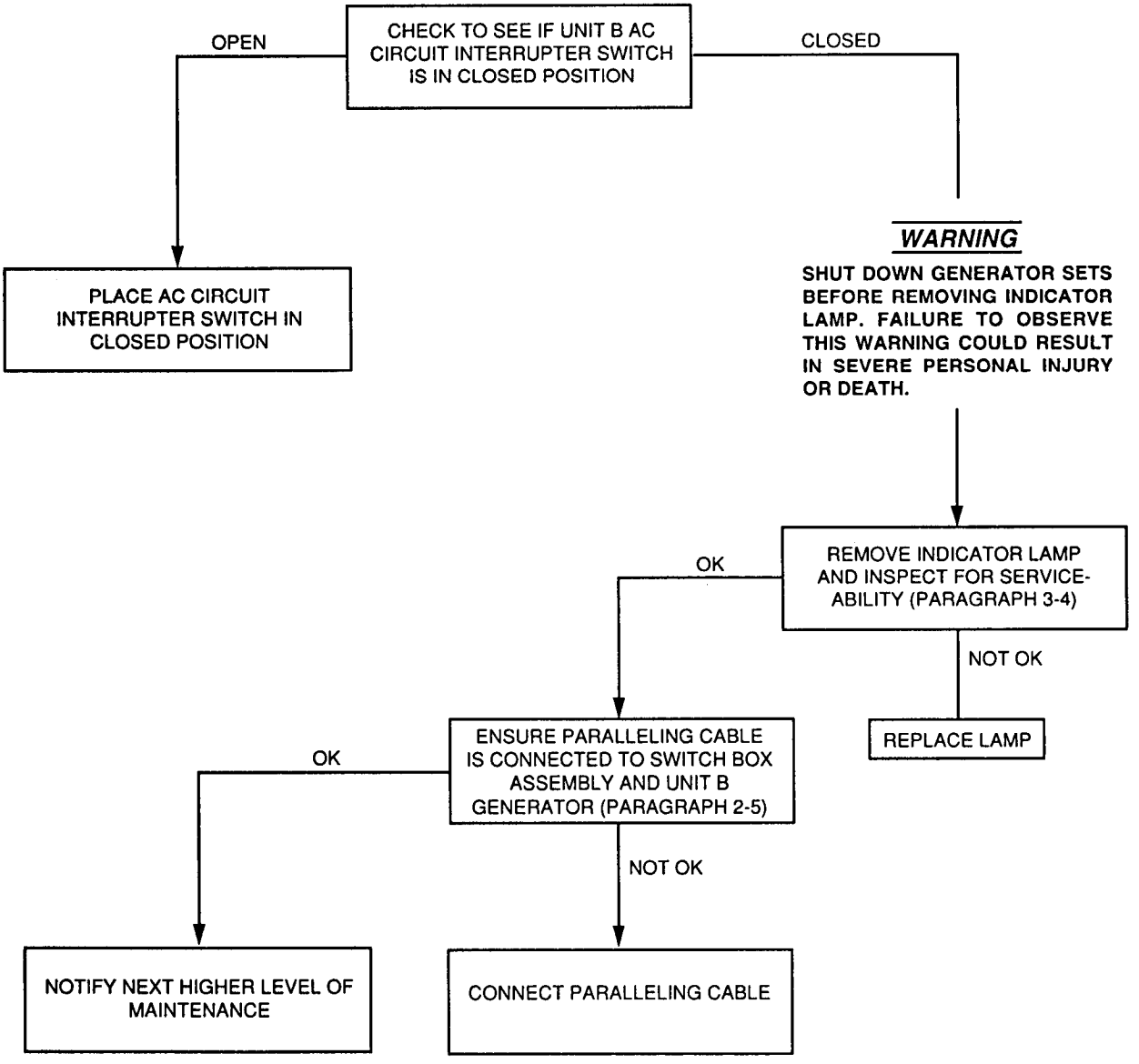

Figure 3-2. Unit B ON indicator Lamp Fails to Light With Generator Set Running.

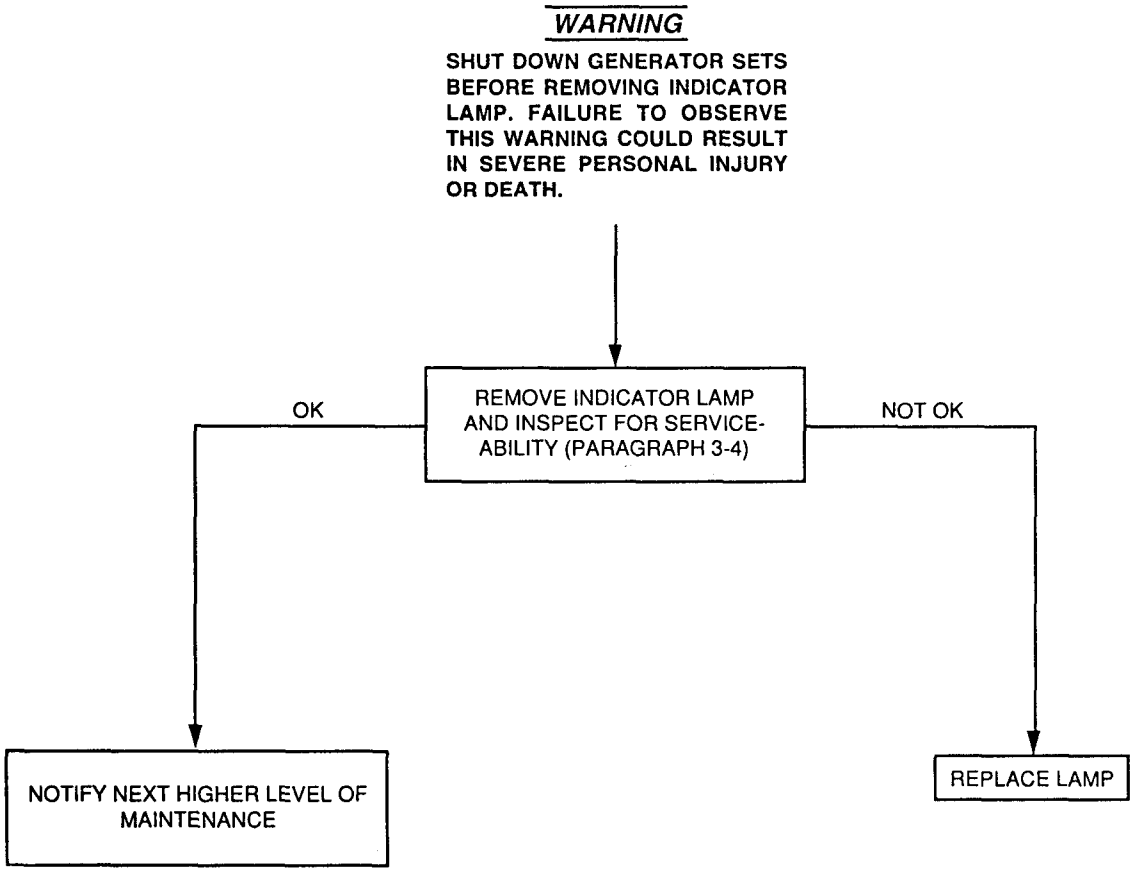

Figure 3-3. ON LINE Indicator Lamp Fails to Light When ON/OFF Switch is Placed to ON Position.

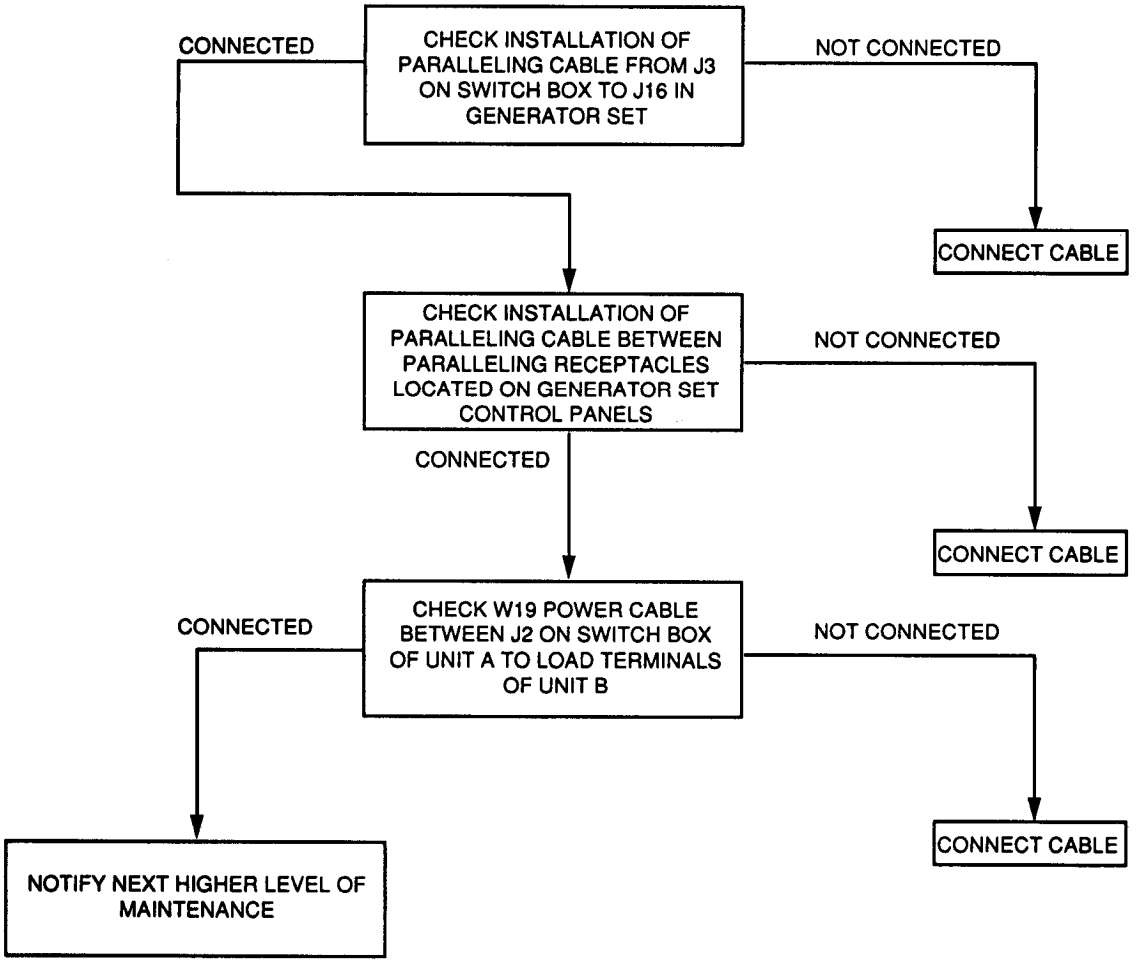

Figure 3-4. Unit Fails To Parallel Through Switch Box.

3-4 INDICATOR LAMP AND/OR LENS REPLACEMENT.

This task covers: a. Removal b. Installation

INITIAL SETUP

Equipment Conditions

Reference

Both generator sets shut down, paragraph 2-5.3.1.
Trailer support devices are lowered, paragraph 2-3.2.1.

REMOVAL

1. Release clamping catch (7, figure 3-5) and open control panel access cover (3).
2. Grip and unscrew lens cap (1).
3. Remove lamp (2) by grasping the base and pulling outward.

INSTALLATION

1. Insert lamp (2) into lens cap (1) and push inward.
2. Install lens cap (1) with lamp (2) by threading lens cap into housing and tightening lens cap firmly.
3. Close control panel cover (3) and secure clamping catch (7).

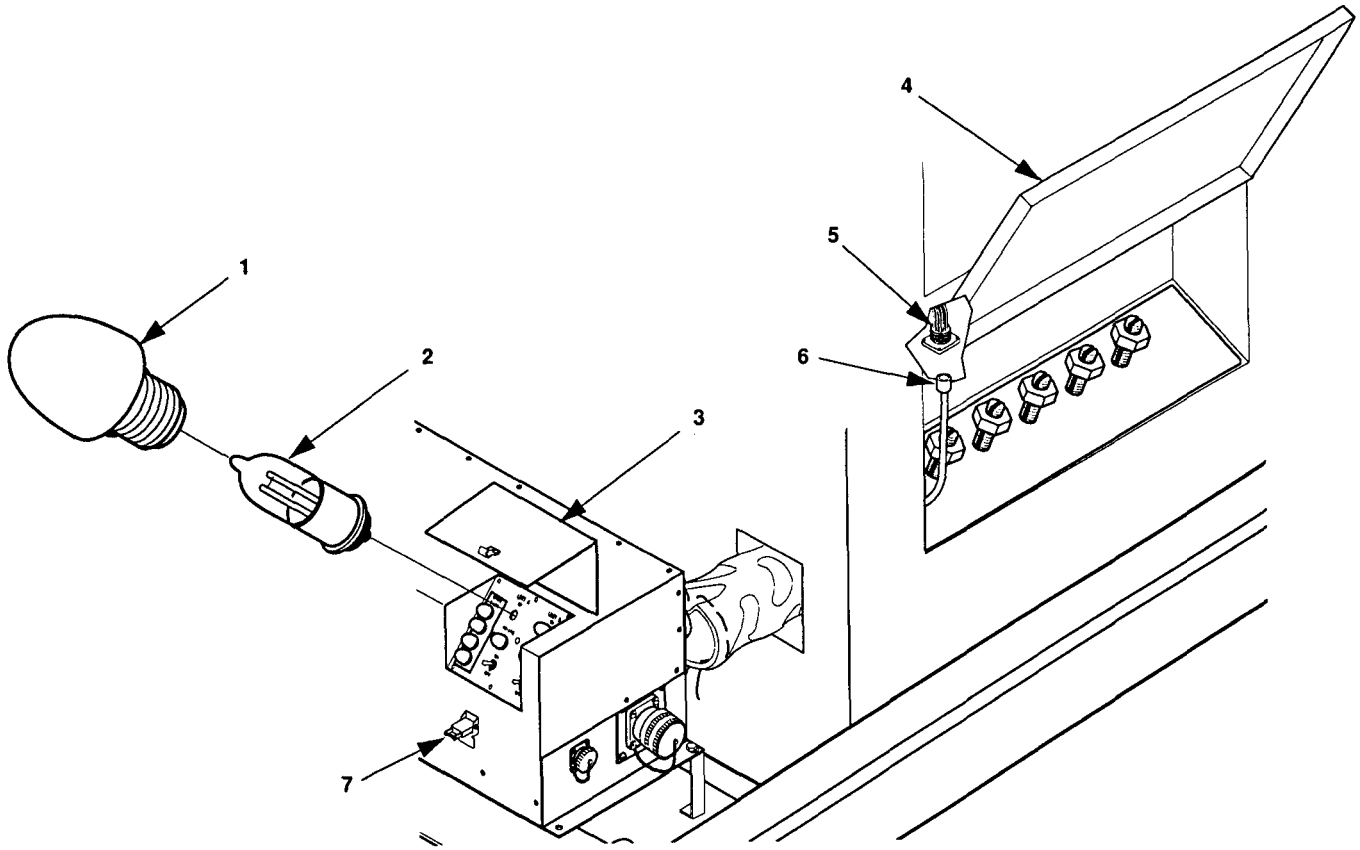

Figure 3-5. Indicator Lamps and P1 Connector Maintenance.

3-5 CONNECTING P1 TO UNIT A.

This task covers: a. Removal b. Installation

INITIAL SETUP

Equipment Conditions

Reference

Both generator sets shut down, paragraph 2-5.3.1.
Trailer support devices are lowered, paragraph 2-3.2.1.

1. Open access panel (4, Figure 3-5) to unit A generator load terminals.

2. Connect P1 (6) to J16 (5) inside generator set.

CHAPTER 4

UNIT MAINTENANCE

Subject Index — Page

Section 1. REPAIR PARTS; SPECIAL TOOLS; TEST, MEASUREMENT, AND DIAGNOSTIC EQUIPMENT (TMDE); AND SUPPORT EQUIPMENT

4-1 COMMON TOOLS AND EQUIPMENT.

For authorized common tools and equipment refer to the Modified Table of Organization and Equipment (MTOE) applicable to your unit.

4-2 SPECIAL TOOLS, TMDE, AND SUPPORT EQUIPMENT.

No special tools or support equipment are required for maintenance of the power units or power plant. Refer to TM 9-6115-643-24P for generator set special tools and/or support equipment. Refer to TM 9-2815-254-24P for engine special tools and/or support equipment.

4-3 REPAIR PARTS.

Refer to TM 9-6115-643-24P for generator set parts and TM 9-2815-254-24P for engine parts. Refer to TM 9-2330-202-14&P for 1 ton trailer repair parts, TM 9-2330-205-14&P for 2 1/2 ton trailer repair parts, and TM 9-2330-392-14&P for high mobility trailer repair parts. Power plant and power unit repair parts not covered in the generator, engine, or trailer RPSTL are listed and illustrated in Appendix F.

Section II. SERVICE UPON RECEIPT

4-4 SERVICE UPON RECEIPT OF MATERIEL.

4-4.1 Unpacking Power Unit. (Refer to figure 4-1 and figure 4-2.) The power unit is boxed prior to shipment. The PU-800, PU801, PU-801A, and PU-802 are identical with the exception of the electrical output frequency of the generator sets. Two PU-800 Power Units are modified to make up the AN/MJQ-39 power plant. Therefore, the unpacking procedures and figures 4-1 and 4-2 are typical for each configuration. Each generator set is packed in place on its respective trailer. Before beginning the unpacking procedure, locate and remove Depreservation Guide.

a. Remove and set aside packing list from side of box. Also remove and set aside shortage packing list if there is one.

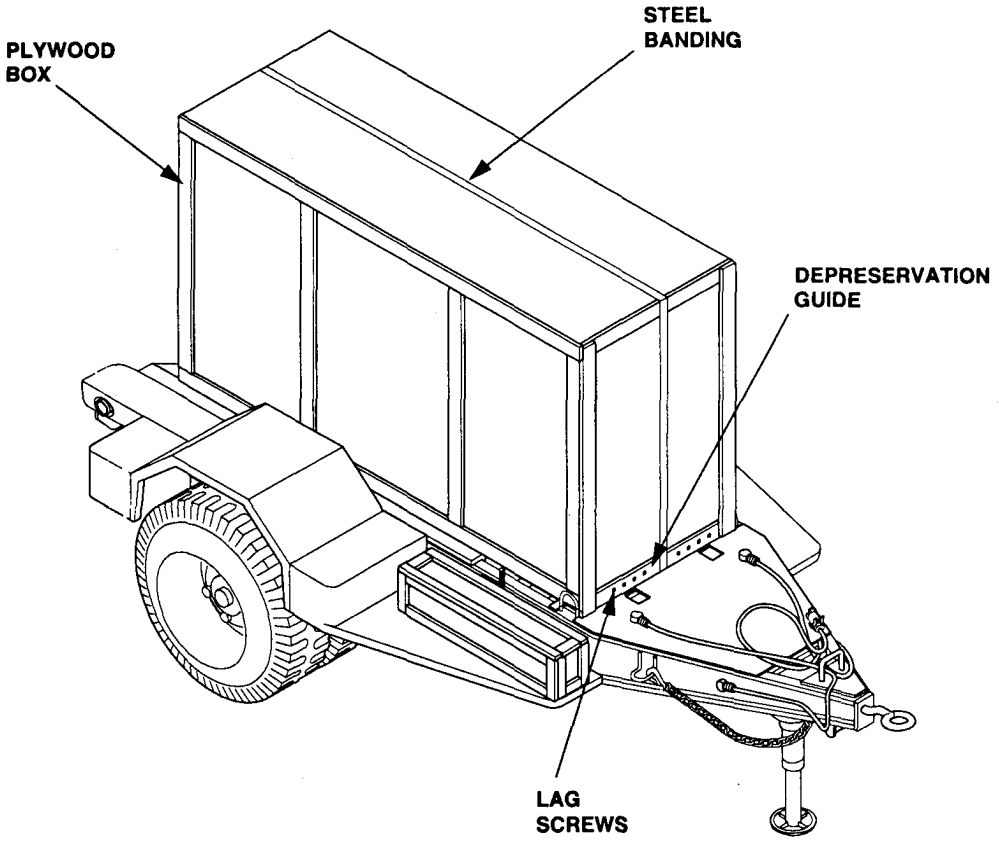

Figure 4-1. Power Unit Packed for Shipment.

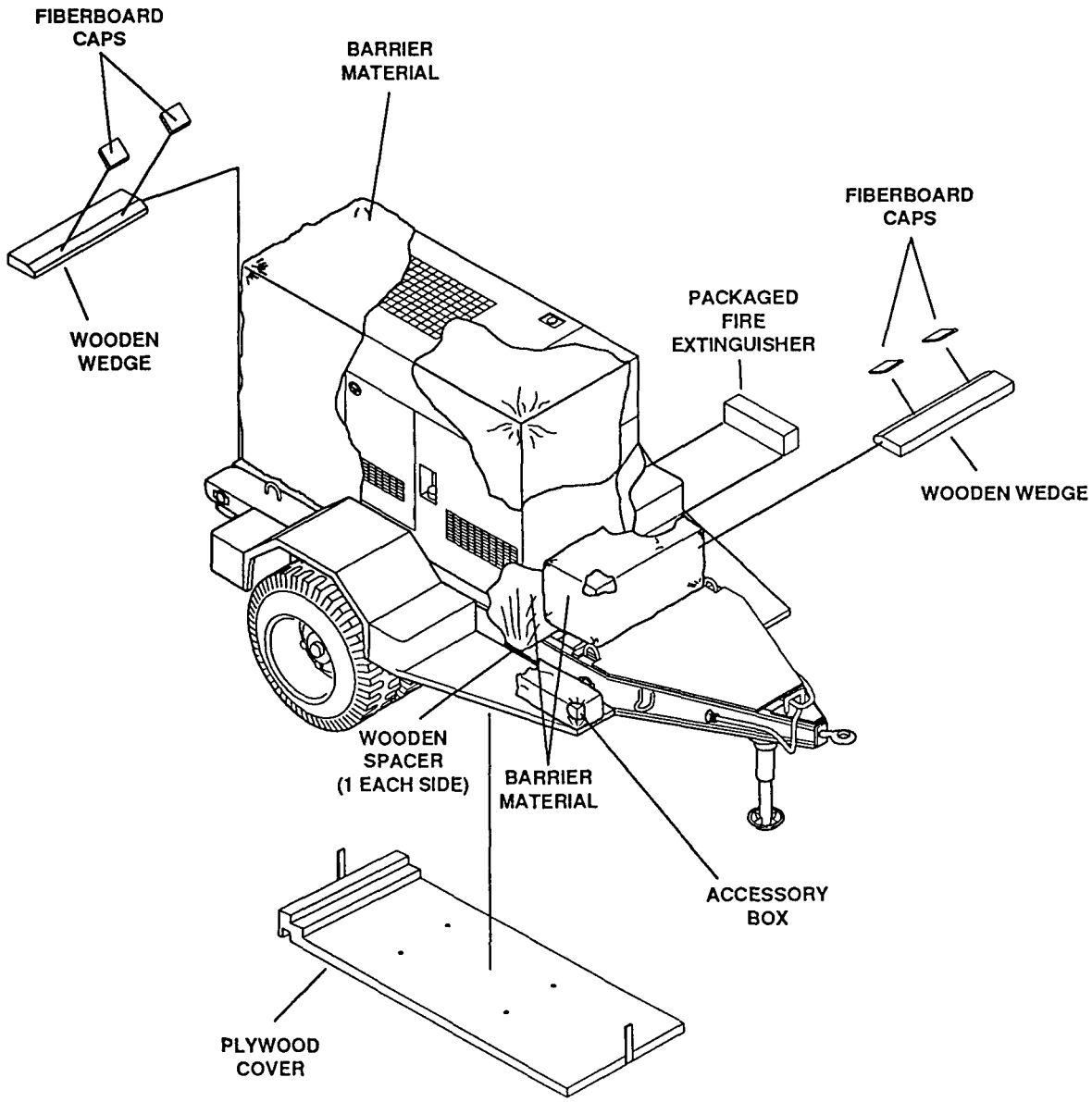

Figure 4-2. Unpacking Power Unit.

WARNING

Steel strapping used in packaging has sharp edges. To avoid injury to personnel, use care when cutting and handling steel strapping.

b. Using metal cutters, carefully cut metal strapping from box covering generator set, accessary box, and when unpacking unit A, the switch box. Remove metal strapping.

c. Remove box cover over generator set by lifting off the cover.

d. Refer to figure 4-2 and remove wooden wedges, spacers, and fiberboard caps from around generator set skid bases.

e. Technical manuals are packaged and may be attached to barrier material. If so, remove and save technical manuals.

f. Remove barrier material from generator sets.

g. Remove packaged fire extinguisher from within generator set enclosures. Unpack and secure fire extinguisher in bracket on trailer.

h. Open accessory box and remove all packaging/cushioning material from accessories.

i. Using the packing list(s) removed in step a., inventory the accessories. Check missing items against shortage packing list (if any). Report any discrepancies to your supervisor.

j. Refer to paragraph 4-19 and install accessory box.

k. Stow accessories in accessory box.

l. Stow technical manuals in generator set document box.

4-4.2 Checking Unpacked Equipment.

a. Inspect the equipment for damage incurred during shipment. If the equipment has been damaged, report the damage on SF 364, Report of Discrepancy (ROD).

b. Check the equipment against the packing list(s) to see if the equipment is complete. Report all discrepancies in accordance with the instructions in DA Pam 738-750.

c. Check to see whether the equipment has been modified.

4-4.3 Deprocessing Unpacked Equipment.

Refer to DA Form 2258 (Depreservation Guide for Vehicles and Equipment), packed with the equipment. The depreservation guide explains what was done to the equipment prior to packaging. It also explains what has to be done before placing the equipment in operation. Perform all depreservation actions required by the depreservation guide.

4-5 INSTALLATION INSTRUCTIONS

4-5.1 TOOLS, TEST, EQUIPMENT, AND MATERIALS REQUIRED FOR INSTALLATION.

A general mechanics tool kit is required for installation of the power plant/power unit.

4-5.2 ASSEMBLY OF EQUIPMENT.

4-5.2.1 ASSEMBLY OF POWER PLANT.

Refer to figure 4-2A and assemble the AN/MJQ-39 as follows.

a. For unit A (set with switch box) connect power cable leads as follows.

(1) Connect lead marked L1 to generator set load terminal L1.

(2) Connect lead marked L2 to generator set load terminal L2.

(3) Connect lead marked L3 to generator set load terminal L3.

(4) Connect lead marked L4 to generator set load terminal L4.

(5) Connect lead marked GND to generator set GND terminal.

b. For units A & B remove 60 inch ground wire from accessory box and connect as follows.

(1) Remove wing nut (1. figure 4-2A) two flat washers (2), hex nut (3), and flat washer (4) from ground stud (5).

(2) Place ground wire (6) ovex ground stud (5).

WARNING

Ensure nut (3) is properly secured creating a good ground. Failure to observe this warning could result in severe personal injury or death.

(3) Install flat washer (4), hex nut (3), two flat washers (2), and wing nut (1).

(4) Route ground wire (6) thru power cable sock (7).

(5) Connect ground wire (6) to generator set ground terminal (8).

4-5.2.2 ASSEMBLY OF POWER UNITS PU-800 AND PU-802.

Refer to figure 4-2A as follows.

a. Remove 60 inch ground wire from accessory box and connect as follows.

(1) Remove wing nut (1, figure 4-2A), two flat washers (2), hex nut (3), and flat washer (4) from ground stud (5).

(2) Place ground wire (6) over ground stud (5).

WARNING

Ensure nut (3) is properly secured creating a good ground. Failure to observe this warning could result in severe personal injury or death

(3) Install flat washer (4), hex nut (3), two flat washers (2), and wing nut (1).

(4) Route ground wire (6) thru power cable sock (7).

(5) Connect ground wire (6) to generator set ground terminal (8).

4-5.2.3 ASSEMBLY OF POWER UNIT PU-801.

Refer to figure 4-2A and assemble as follows.

a. Remove 48 inch ground wire from accessory box and connect as follows.

(1) Remove wing nut (1, figure 4-2A). two flat washers (2), hex nut (3), and flat washer (4) from ground stud (5).

WARNING

Ensure hex nut (3) is properly secured creating a good ground. Failure to observe this warning could result in severe personal injury or death.

(2) Install fiat washer (4), hex nut (3), two flat washers (2), and wing nut(1).

(3) Route ground wire (6) thru power cable sock (7).

(4) Connect ground wire (6) to generator set ground terminal (8).

4-6 PRELIMINARY SERVICING AND ADJUSTMENT OF EQUIPMENT.

Refer to TM 9-6115-643-24 for generator set and TM 9-2815-254-24 for engine. Refer to TM 9-2330-205-14&P for 2 1/2 ton trailer, TM 9-2330-202-14&P for 1 ton trailer, and TM 9-2330-392-14&P for high mobility trailer.

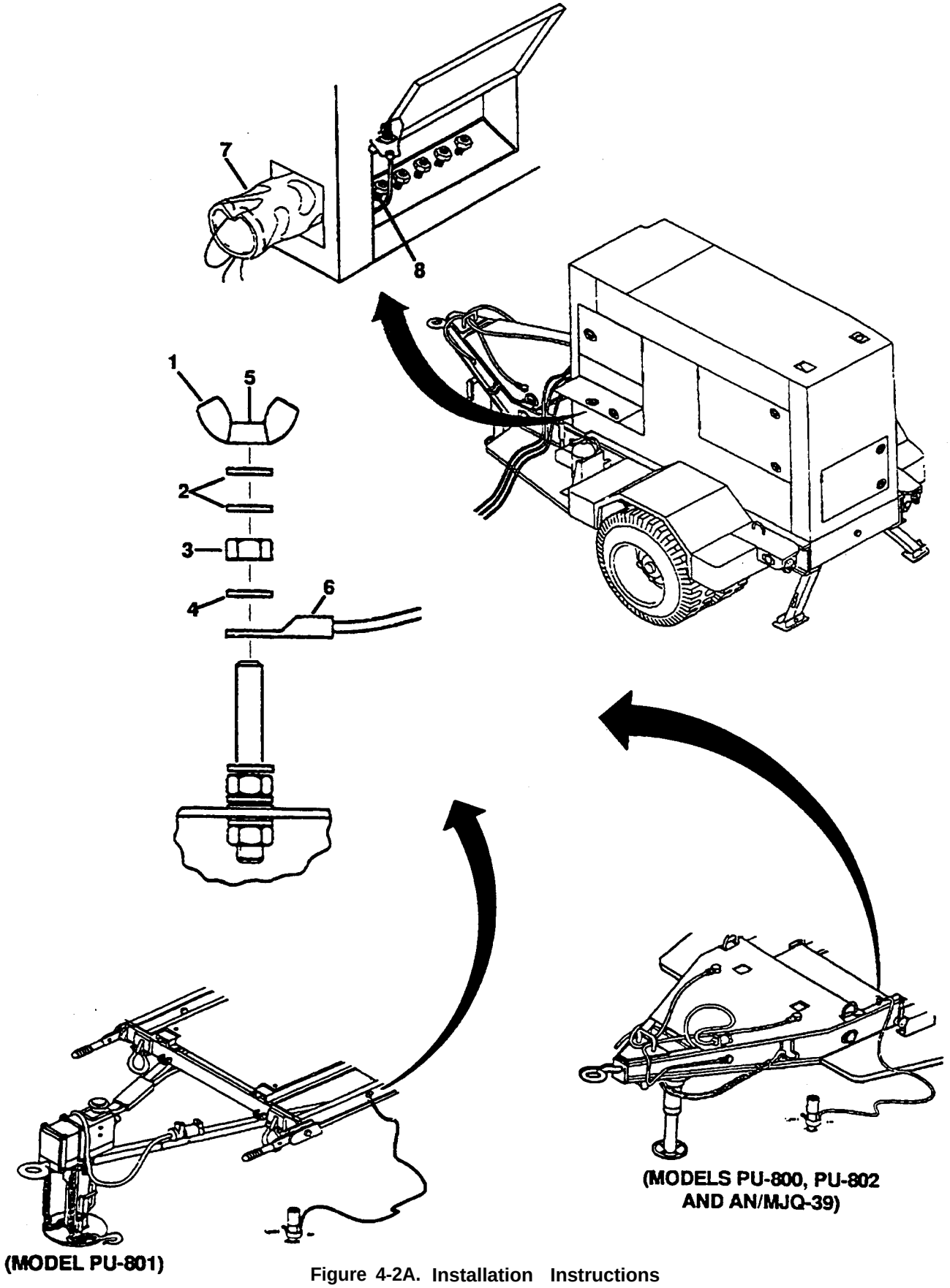

Figure 4-2A. Installation Instructions

Section III. UNIT LUBRICATION

4-7 POWER UNIT/POWER PLANT LUBRICATION.

Refer to LO 9-6115-643-12 for generator set and TM 9-2330-205-14&P for 2 1/2 ton trailer. For 1 ton trailer lubrication, refer to TM 9-2330-202-14&P. For high mobility trailer lubrication, refer to TM 9-2330-392-14&P. The rear leveling-support jack is a modification to the standard 1 ton and high mobility trailer chassis, Lubrication of this leveling-support jack is not covered in these trailer manuals. Refer to Figure 4-3 and lubricate the leveling-support jack semiannually, as follows.

WARNING

Dry cleaning solvent used to clean parts is potentially dangerous to personnel and property, Clean parts in a well-ventilated area, Avoid inhalation of solvent fumes. Wear goggles and rubber gloves to protect eyes and skin. Wash exposed skin thoroughly, Do not smoke near solvent nor use near open flame or excessive heat. Failure to observe this warning can cause severe personnel injury and/or death.

a. Clean the lubrication fitting (1) with dry cleaning solvent (item 1, appendix E).

b. Inject sufficient GAA grease (item 2, appendix E) into lubrication fitting to lubricate screw threads (3) inside leg base (4).

c. Apply OE lubricating oil (item 3, appendix E) to both ends of leg prop assembly pivot shaft (2).

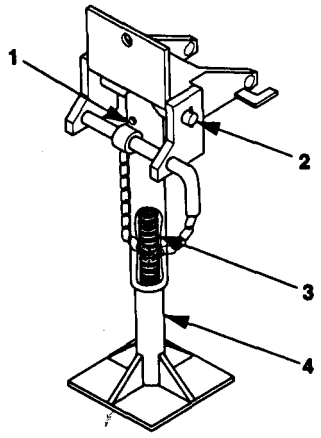

Figure 4-3. Rear Leveling-Support Jack Lubrication Points.

Section IV. UNIT PREVENTIVE MAINTENANCE CHECKS AND SERVICES (PMCS)

4-8 INTRODUCTION TO UNIT PMCS TABLE.

Table 4-1 (PMCS table) has been provided so you can keep your equipment in good operating condition and ready for its primary mission.

4-8.1 Warnings, Cautions, and Notes. Always observe the WARNINGS, *CAUTIONS* and *NOTES* appearing in your PMCS table. Warnings and cautions appear before applicable procedures. You must observe WARNINGS to prevent serious injury to yourself and others. You must observe *CAUTIONS* to prevent your equipment from being damaged. You must observe *NOTES* to ensure procedures are performed properly.

4-8.2 Explanation of Table Entries.

4-8.2.1 Item No. Column. Numbers in this column are for reference. When completing DA Form 2404 (Equipment Inspection and Maintenance Worksheet), include the item number for the check/service indicating a fault. Item numbers also appear in the order that you must do checks and services for the intervals listed.

4-8.2.2 Interval Column. This column tells you when you must do the procedure in the procedure column. Perform procedures such as Monthly or Quarterly at the listed calendar interval. Perform procedures designated by number of hours when the equipment has been operated for that many hours.

4-8.2.3 Item to be Checked or Serviced Column. This column lists the item to be checked or serviced.

4-8.2.4 Procedure Column. This column gives the procedure for checking or servicing the item listed in the item to check/service column. You must perform the procedure to know if the power unit or power plant is ready or available for its intended mission or operation. You must do the procedure at the time stated in the interval column.

4-8.2.5 Not Fully Mission Capable if: Column. Information in this column tells you what faults will keep your equipment from being capable of performing its primary mission. If you make checks or services that show faults listed in this column, do not operate the equipment.

4-8.3 Other Table Entries. Be sure to observe all special information and notes that appear in your table.

4-8.4 Special Instructions. Preventive maintenance is not limited to performing the checks and services listed in the PMCS table. See figure 4-4 for PMCS routing. Covering unused receptacles, stowing unused accessories, and other routine procedures such as equipment inventory, cleaning components, and touch-up painting are not listed in the table. These are things you should do any time you see that they need to be done. If a routine check is listed in the PMCS table, it is because experience has shown that problems may occur with this item. Take along tools and cleaning cloths needed to perform the required checks and services.

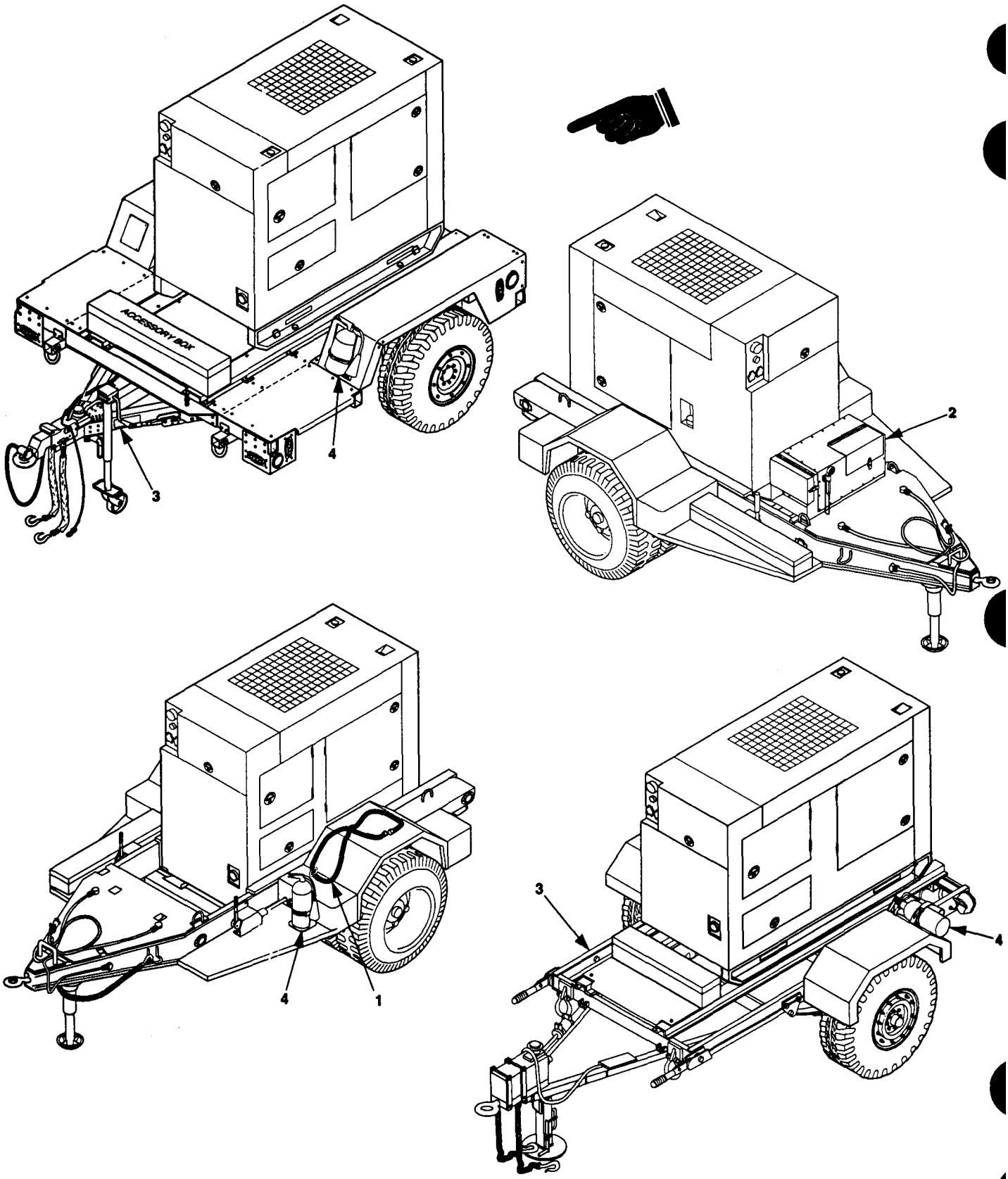

Figure 4-4. Unit PMCS Routing Diagram.

Table 4-1. Unit Preventive Maintenance Checks and Services.

NOTE

This PMCS table lists the checks and services as performed on a single Power Unit. These procedures must be duplicated on each Power Unit that makes up the AN/MJQ-39.

Unit B of the AN/MJQ-39, PU-800, PU-801, PU-801A, and PU-802 does not have a switch box. Maintenance for the switch box is only applicable to Unit A of the AN/MJQ-39.

Item No.	Interval	Item to be Checked or Serviced	Procedure	Not Fully Mission Capable if:
		WARNING Before performing any maintenance that requires climbing on or under trailer, make sure that trailer handbrakes are set, trailer front landing leg is lowered, and rear leveling-support jack is lowered. Injury to personnel could result from trailer suddenly rolling or tipping.		
1	Semi annually	POWER CABLE AN/MJQ-39	Inspect power cable for worn, frayed or cracked insulation, loose terminal lugs, and loose connections. Tighten as needed.	Power cable is unserviceable.
2	Semi annually	SWITCH BOX ASSEMBLY AN/MJQ-39	a. Inspect switch box assembly. Refer to paragraph 4-12. b. Inspect mounting brackets for cracks or loose or missing hardware.	
3	Semi annually	MOUNTING RAILS	Inspect for cracks and deformation.	Mounting rail is cracked or deformed.
4	Semi annually	FIRE EXTINGUISHER	a. Inspect for broken seal and damage to handle.	
			b. Weigh to determine whether charge is sufficient. Weight is about 13 pounds when fully charged. If weight is 12.5 pounds or less, send to specialized activity for recharging.	Fire extinguisher not charged.

Section V. TROUBLESHOOTING

4-9. GENERAL.

Refer to TM 9-6115-643-24 for generator set troubleshooting procedures, end to TM 9-2815-254-24 for engine troubleshooting procedures. Refer to TM 9-2330-205-14&P for 2 1/2 ton trailer troubleshooting procedures, TM 9-2330-202-14&P for 1 ton trailer troubleshooting procedures, and TM 9-2330-392-14&P for high mobility trailer troubleshooting procedures. The symptom index for the power plant lists faults associated with switch box operation. Figures 4-5, 4-6, 4-7, 4-8, and 4-9 provide a go-no-go flowchart of each malfunction. Each malfunction listed includes a reference to the applicable figure that contains a chart that will help you determine probable causes and corrective actions to take. The symptom index cannot list all faults that may occur, nor all the test or inspections and corrective actions. If a malfunction is not listed or cannot be corrected by listed corrective actions, notify next higher level of maintenance for assistance.

SYMPTOM INDEX

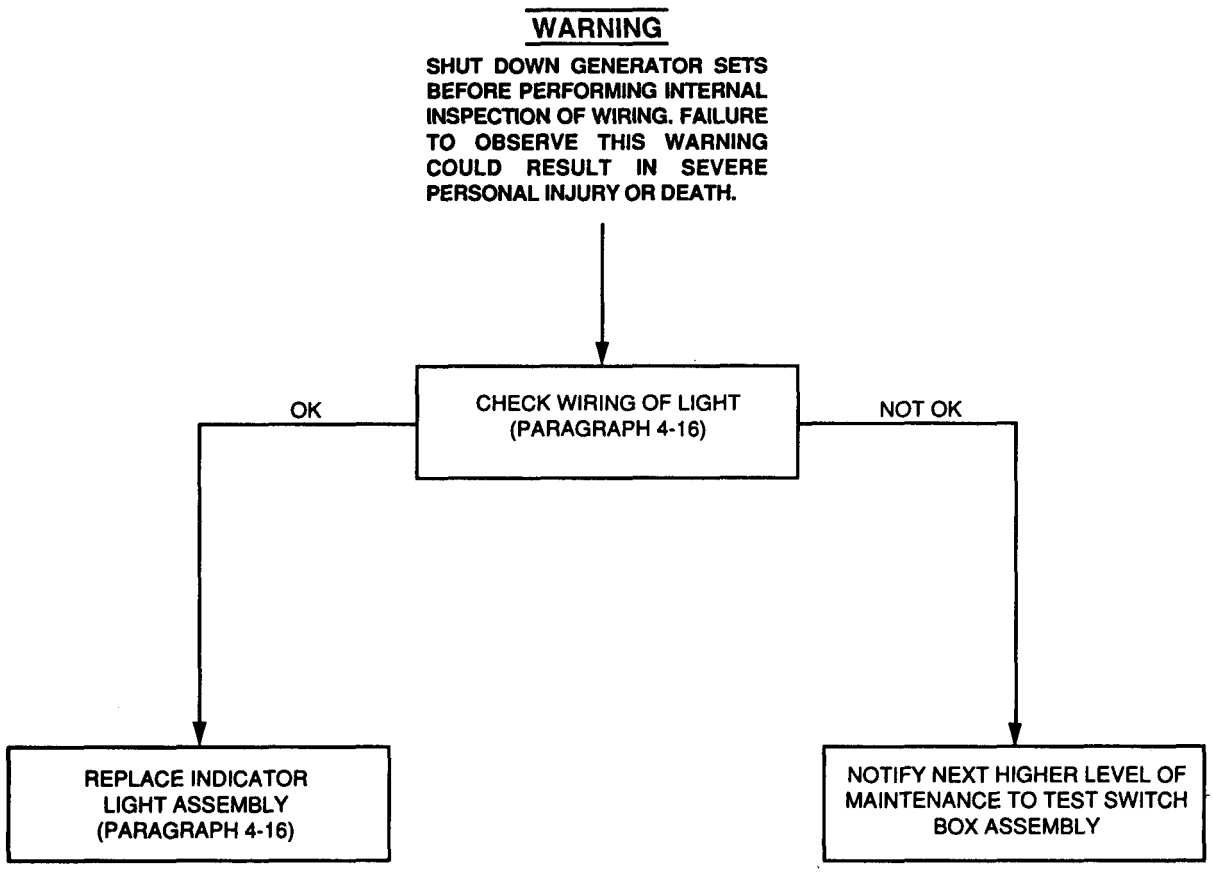

Figure 4-5. Indicator Lamp Is Good But Does Not Light.

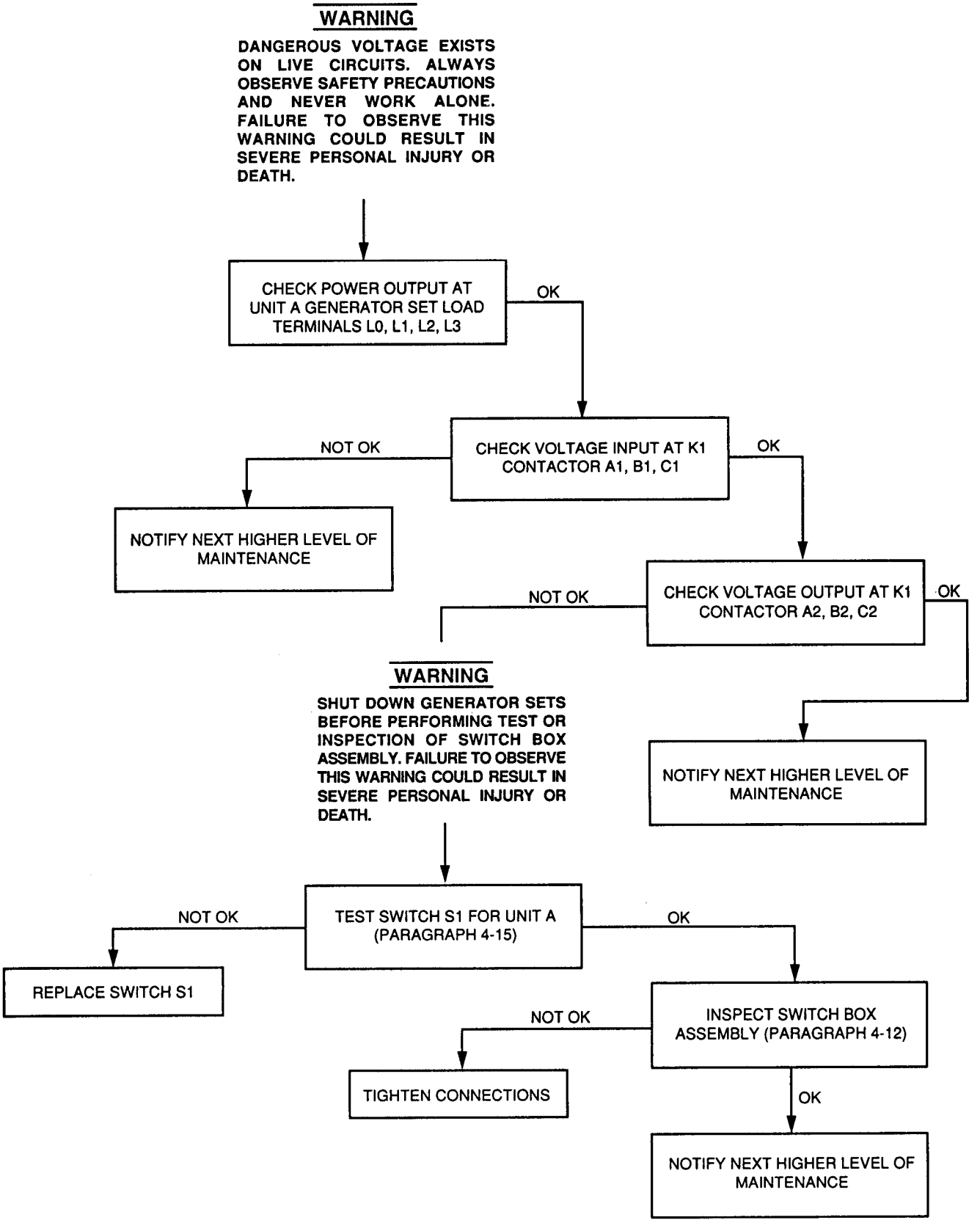

Figure 4-6. Unit A has No Power.

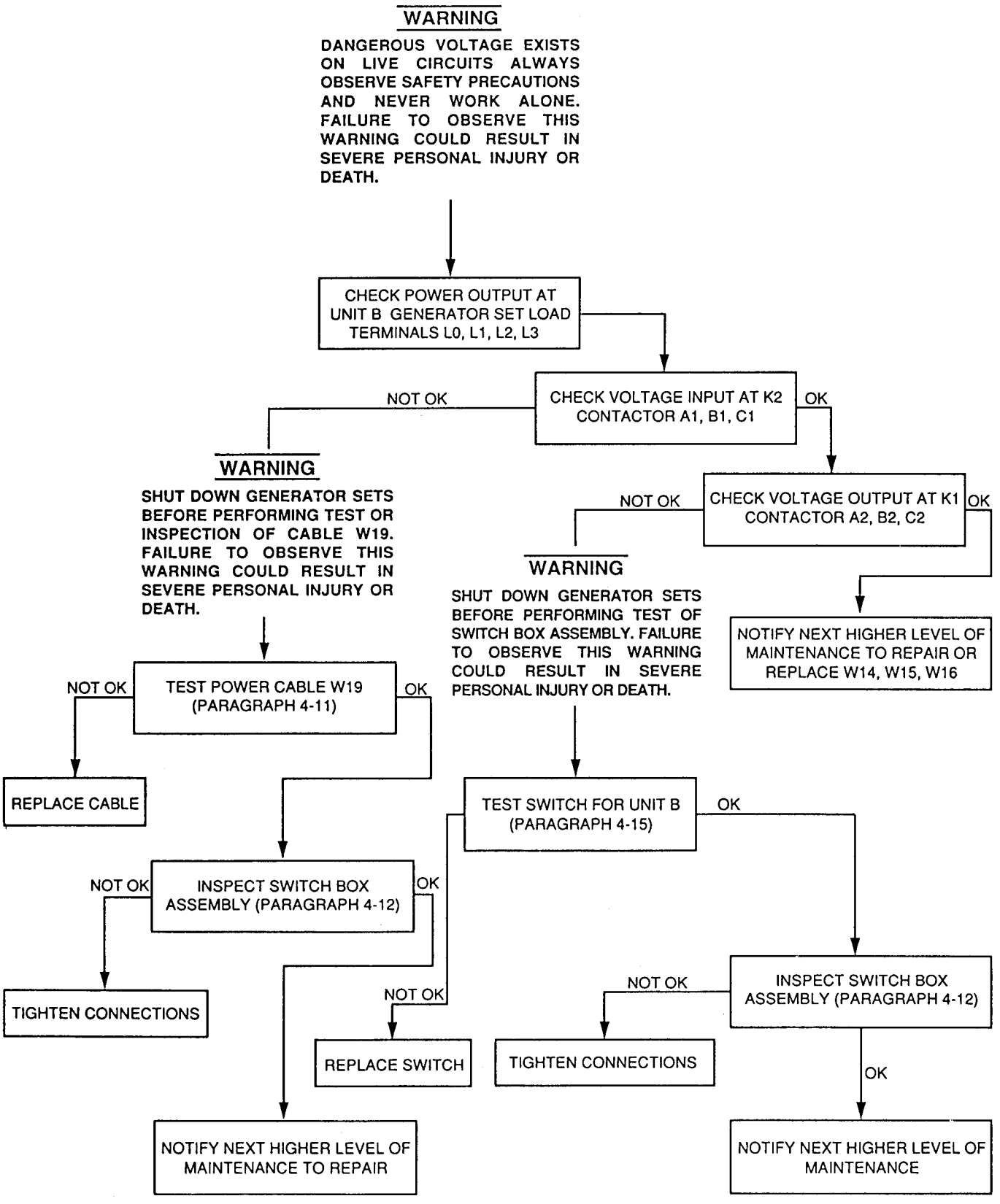

Figure 4-7. Unit B Has No Power.

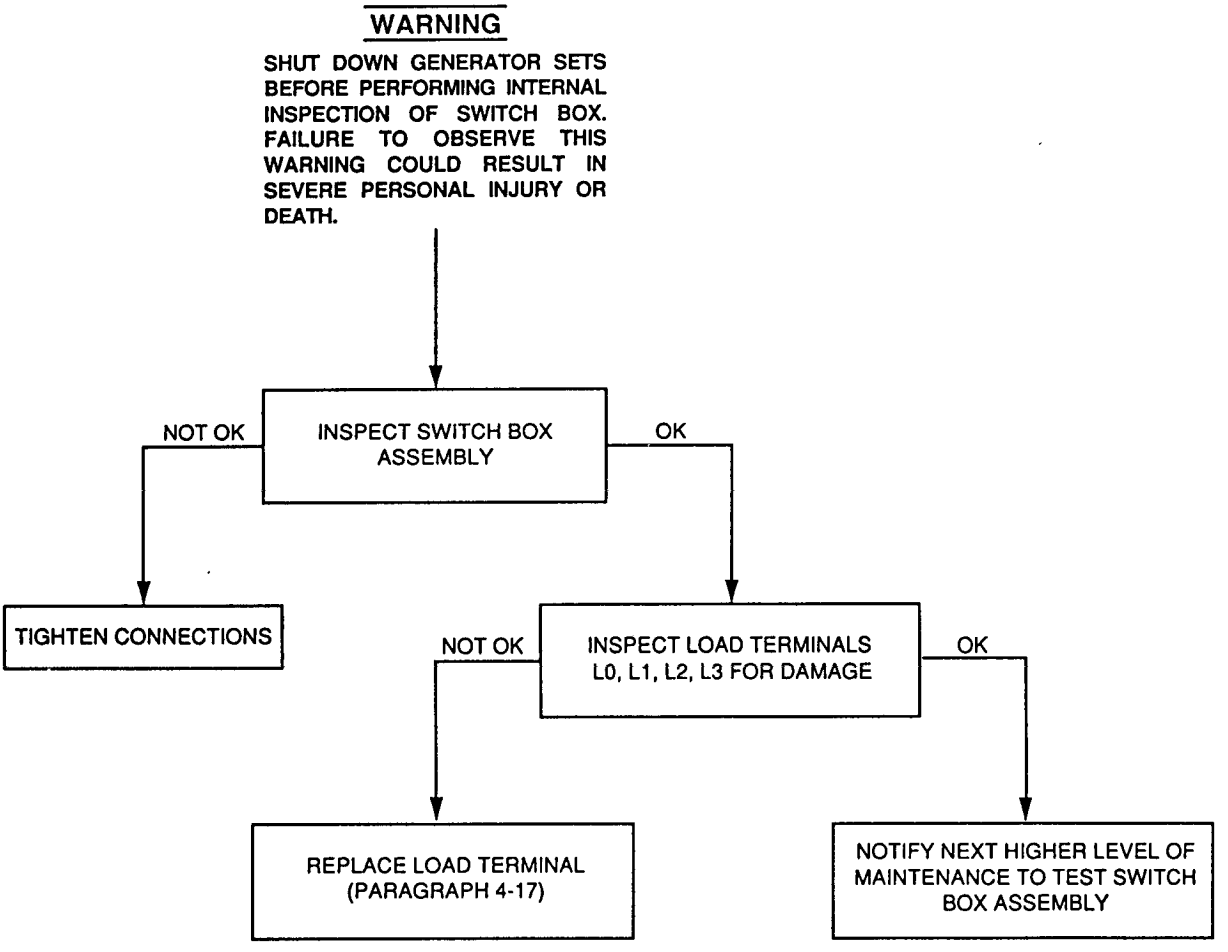

Figure 4-8. Power is Absent From All Switch Box Load Terminals.

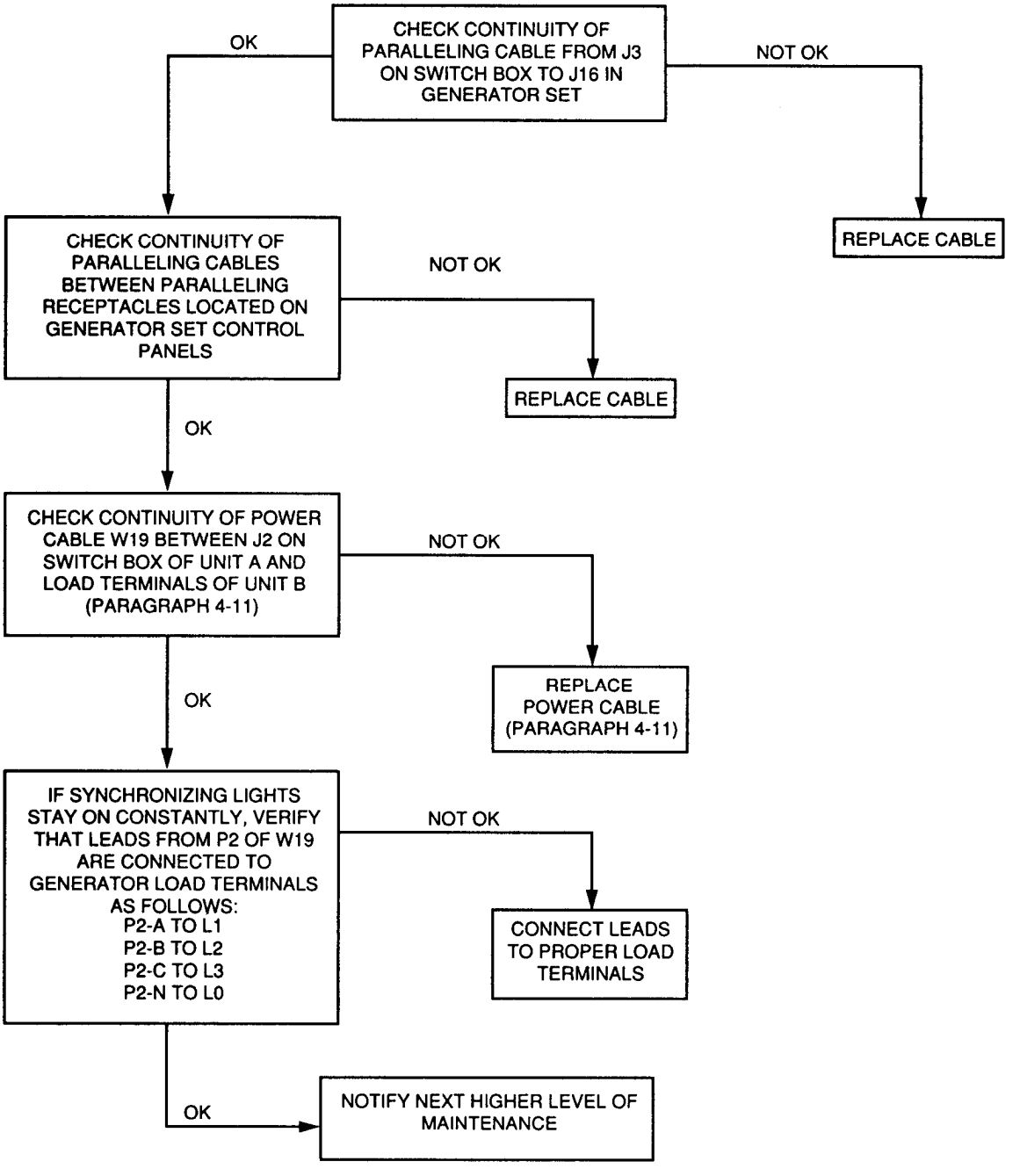

Figure 4-9. Cables Are Connected Properly, But Unit Fails To Parallel Through Switch *Box.*

Section VI. MAINTENANCE PROCEDURES.

4-10 MAINTENANCE OF GENERATOR SETS.

Refer to TM 9-6115-643-24 for generator sets and to TM 9-2815-254-24 for engine.

4-11 POWER CABLE W19 MAINTENANCE.

This task covers: a. Removal
b. Test
c. Installation

INITIAL SETUP

Tools

General Mechanic's Tool Kit (item 1, appendix B)
Multimeter (item 2, appendix B)

Equipment Conditions

Reference

Both generator sets shut down, paragraph 2-5.3.1.

REMOVAL

1. Disconnect electrical leads of power cable from unit B.
2. Disconnect cable from J2 of the switch box assembly on unit A.

TEST

1. Set multimeter for resistance.
2. Refer to FO-1 and check continuity of each electrical lead from P2.

NOTE

Pins G1, G2, G3 and G4 are common points and should read continuity to the green wire. Ensure that G1, G2, G3 and G4 are common points and read continuity to each other.

Table 4-2. Cable Assembly W19.

Wire Color	From	To
Black	P2-A	L1
Red	P2-B	L2
Blue	P2-C	L3
White	P2-N	LO
Green	P2-G1	GND
Green	P2-G2	GND
Green	P2-G3	GND
Green	P2-G4	GND

INSTALLATION

1. Connect new W19 to J2 of the switch box on unit A.

2. Connect the four leads of the power cable to the generator set on unit B.

4-12 SWITCH BOX ASSEMBLY MAINTENANCE.

This task covers: a. Removal
b. Inspection
c. Installation

INITIAL SETUP

Tools

Tool Kit, General Mechanic's
(item 1, appendix B)

Materials/Parts

Washers, Lock

Equipment Conditions

Reference

Trailer support devices are lowered, paragraph 2-3.2.1.
Both generator sets are shut down, paragraph 2-5.3.1

REMOVAL

1. Remove four nuts (14, figure 4-10), flat washers (5), and screws (6) that secure switch box assembly.

2. Disconnect W1, W2, W3, and W4 from the generator set load terminals (9).

3. Disconnect W5 from the generator set ground terminal (10).

4. Disconnect P1 (7) from J16 (8) of the generator set.

5. Remove switch box assembly.

INSPECTION

1. Release clamping catch (15) and open the control panel access cover (4).

2. Inspect control panel assembly (16) for missing or broken parts.

3. Close control panel cover (4) and secure with clamping catch (15).

4. Release clamping catch (17) and open load terminal door (18).

5. Inspect load terminals and ground terminal for missing or broken parts.

6. Close load terminal door (18) and secure with clamping catch (17).

7. Remove 21 screws (3), lock washers (2), and flat washers (l). Discard lock washers.

CAUTION

The control panel connector P3 is connected to connector J4. Movement of the switch box cover is limited. Slide the switch box cover from the switch box assembly carefully to prevent damage to control panel wiring harness.

8. Carefully position switch box cover (19) in front of switch box assembly.

9. Disconnect P3 (11) from J4 (13).

10. Remove switch box cover (19).

11. Inspect for loose component mounting and missing connections. Tighten all loose connections.

12. Inspect all leads and wires for worn or deteriorated insulation that reveals bare spots in conductors. If found, notify next higher level of maintenance.

13. Position switch box cover (19) in front of switch box assembly.

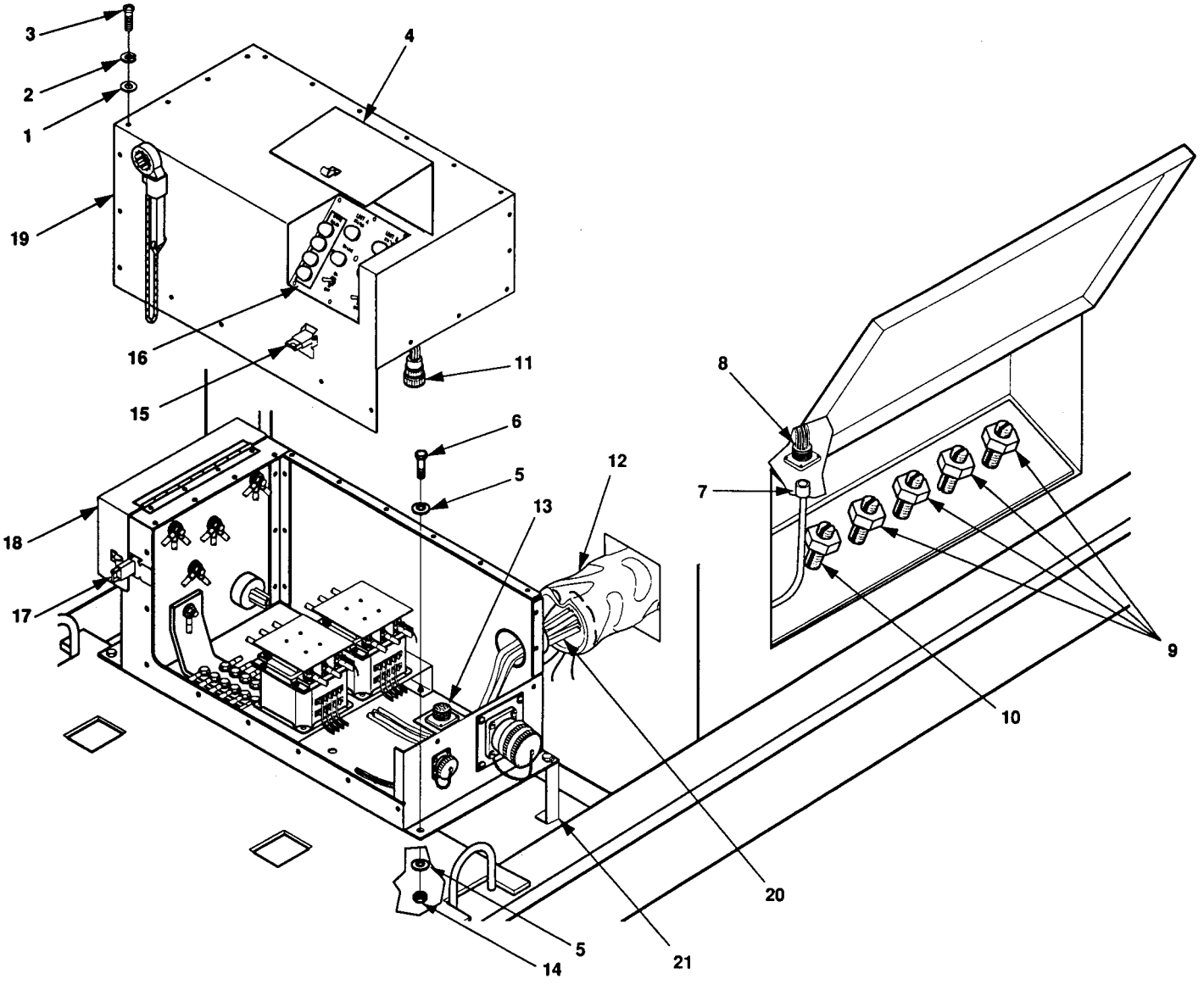

Figure 4-10. Switch Box Assembly Maintenance.

14. Connect P3 (7) to J4 (8).

15. Position switch box cover (19) over switch box assembly and align mounting holes.

16. Install a flat washer (1), new lock washer (2) and screw (3) that secure the switch box cover (19).

INSTALLATION

1. Position switch box assembly on switch box support (21) and front platform.

2. Route electrical leads (20) and cable harness (7) through the power cable sock (12).

3. Align mounting holes of the switch box assembly and switch box support (21).

4. Install four screws (6), eight flat washers (5) and nuts (14), to secure switch box assembly.

5. Connect P1 (8) to J16 (7) of generator set.

6. Connect W1, W2, W3, W4 and W5 to the load terminals (9) of the generator set as follows:

   a. Connect W1 to L1.
   b. Connect W2 to L2.
   c. Connect W3 to L3.
   d. Connect W4 to LO.

7. Connect W5 to GND (10).

4-13 LOAD TERMINAL WRENCH ASSEMBLY MAINTENANCE.

This task covers: a. Removal
b. Repair
c. Installation

INITIAL SETUP

Tools

Tool Kit, General Mechanic's (item 1, appendix B)

Materials/Parts

Washer, Lock

Equipment Conditions

Reference

Both generator sets shut down, paragraph 2-5.3.1.
Trailer support devices are lowered, paragraph 2-3.2.1.

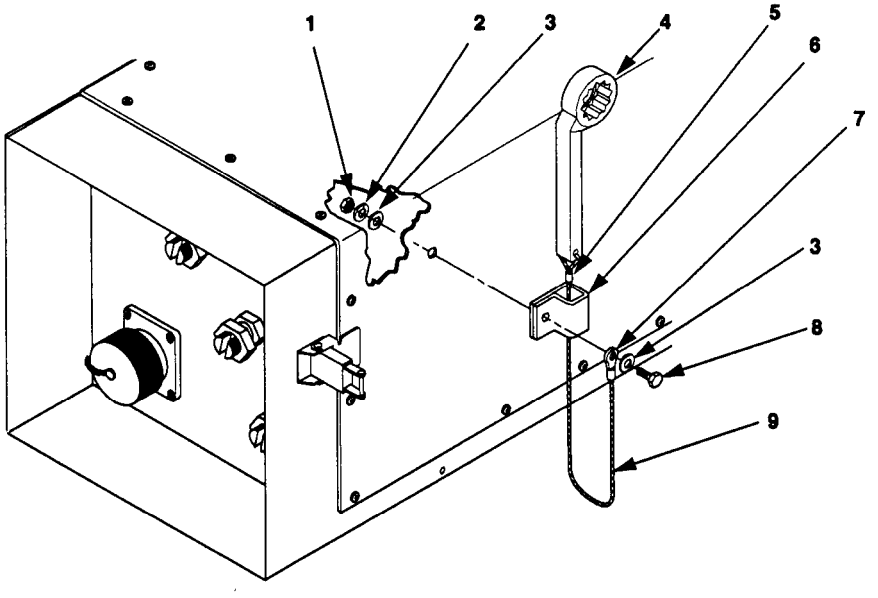

Figure 4-11. Switch Box Load Terminal Wrench Assembly Replacement.

REMOVAL

1. Refer to paragraph 4-12 and perform steps 7 through 10.
2. Remove nut (1, figure 4-11), lock washer (2), and flat washer (3). Discard lock washer.
3. Remove screw (8), flat washer (3), loop clamp (6), and box wrench (4) with attached rope (9).

REPAIR

When the rope (9) requires replacement, perform the following:

a. Cut old rope (9) from box wrench (4).

b. On new rope, flare each end to prevent unraveling.

c. Install new terminal lug (7) to one end of rope (9).

d. Thread other end of rope (9) through the opening in handle of load terminal wrench (4).

e. Install conductor splice to secure rope (9) to the wrench (4).

INSTALLATION

1. Place the loop clamp (6) so that mounting holes are in alignment with switch box cover holes.

2. Drop terminal lug end of rope (9) with box wrench (4) through loop clamp (6) as shown in figure 4-11.

3. Install screw (8), two flat washers (3), one terminal lug (7), new lock washer (2) and nut (1) that secures loop clamp (6) to switch box cover.

4. Refer to paragraph 4-12 and perform steps 13 through 16 of Inspection.

4-14 CLAMPING CATCH MAINTENANCE.

This task covers: a. Removal b. Installation

INITIAL SETUP

Tools

Tool Kit, General Mechanic's (item 1, appendix B)
Drill, 1/4-inch (item 2, appendix B)
Riveter, Blind Head (item 5, appendix B)

Materials/Parts

Rivets, Blind Head

Equipment Conditions

Reference

Both generator sets shut down, paragraph 2-5.3.1.
Trailer support devices are lowered, paragraph 2-3.2.1.

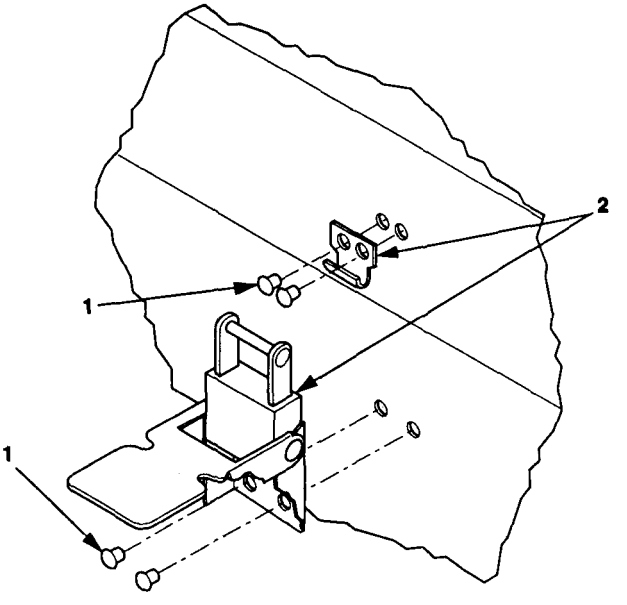

Figure 4-12. Clamping Catch Replacement.

REMOVAL

1. Drill out rivets (1, figure 4-12) that secure clamping catch (2).

2. Remove defective clamping catch(2).

INSTALLATION

1. Position new clamping catch (2) and secure with rivets (1).

2. Close cover.

4-15 SWITCH BOX SWITCHES MAINTENANCE.

This task covers: a. Removal
b. Test
c. Installation

INITIAL SETUP

Tools

Tool Kit, General Mechanic's
(item 1, appendix B)
Multimeter, AN/PSM-45
(item 2, appendix B)

Equipment Conditions

Reference

Both generator sets shut down, paragraph 2-5.3.1.
Trailer support devices are lowered, paragraph 2-3.2.1.

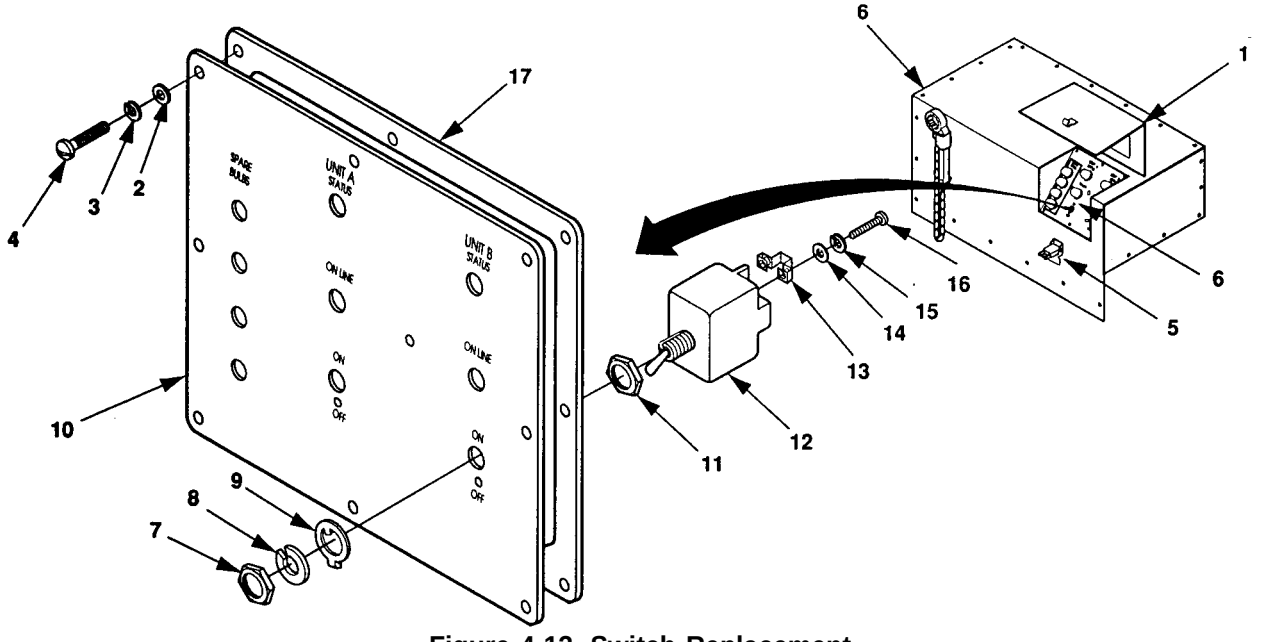

Figure 4-13. Switch Replacement

REMOVAL

1. Release clamping catch (5, Figure 4-13) and open the control panel access cover (1).

2. Remove 8 screws (4), flat washers (2) and lock washers (3). Remove control panel assembly (10).

3. Tag wires on terminals 3, 4 and 6 of switch (12).

4. Remove terminal screws (16), lock washers (15), flat washers (14) and conductor bus (13) from switch terminals.

5. Remove nut (7), lock washer (8), locking ring (9) and switch (12).

TEST

1. Set multimeter for continuity test.

2. With switch (12) in center position, check continuity of switch between terminals 3 and 5.

3. If no continuity in step 2, replace switch.

4. With switch (12) in OFF position, check continuity of switch between:

   a. Terminals 3 and 5
   b. Terminals 2 and 6
   c. Terminals 3 and 6
   d. If there is continuity in step a, b, or c, replace switch.

INSTALLATION

1. Remove nut (7), lock washer (8), and locking ring (9) from new switch.

2. Hand tighten nut (11) on switch.

NOTE

Make sure terminals 3 and 6 of switch are toward bottom of panel when installing switch.

3. Insert switch body (12) into mounting hole and position nut (11) against control panel assembly (10).

4. Install locking ring (9) into keyway of switch until alignment tip goes into control panel assembly (10).

5. Install lock washer (8) against locking ring (9).

6. Install nut (7) and tighten, making sure that locking ring (9) alignment tip is engaged in control panel assembly (10).

7. Remove screws (16) with washers from terminals of new switch (12).

8. Install conductor bus (13) between terminals 2 and 5.

9. Install tagged wires, screws (16) and washers (14) and lock washers (15) to terminals.

10. Position control panel assembly (10) with gasket (17) on switch box cover (6) and align mounting holes.

11. Install 8 new lock washers (3) flat washers (2) and screws (4).

12. Close switch box cover (1) and secure with clamping catch (5).

4-16 INDICATOR LIGHT MAINTENANCE.

This task covers: a. Removal
b. Test
c. Installation

INITIAL SETUP

Tools

Tool Kit, General Mechanic's (item 1, appendix B)
Multimeter AN/PSM-45 (item 2, appendix B)
Solder gun (item 2, appendix B)

Materials/Parts

Solder (item 4, appendix E)
Housing, Indicator Light
Washer, Lock

Equipment Conditions

Reference

Both generator sets shut down, paragraph 2-5.3.1
Trailer support devices are lowered, paragraph 2-3.2.1.

REMOVAL

1. Release clamping catch (8, figure 4-14) and open control panel access cover.

2. Remove 8 screws (11), flat washers (9), lock washers (10) and control panel assembly (12). Discard lock washers.

NOTE

The switch box assembly has eight lamps. Replacement procedures are the same for each indicator lamp.

3. Tag leads connected to each terminal (13) of indicator lamp housing to be replaced, and unsolder each lead.

4. Remove and retain lens (1), O-ring (14) and lamp (2).

5. Remove mounting nut (6) and internal tooth lock washer (5).

6. Slide indicator housing (3) out of control panel assembly (12) and remove O-ring (4).

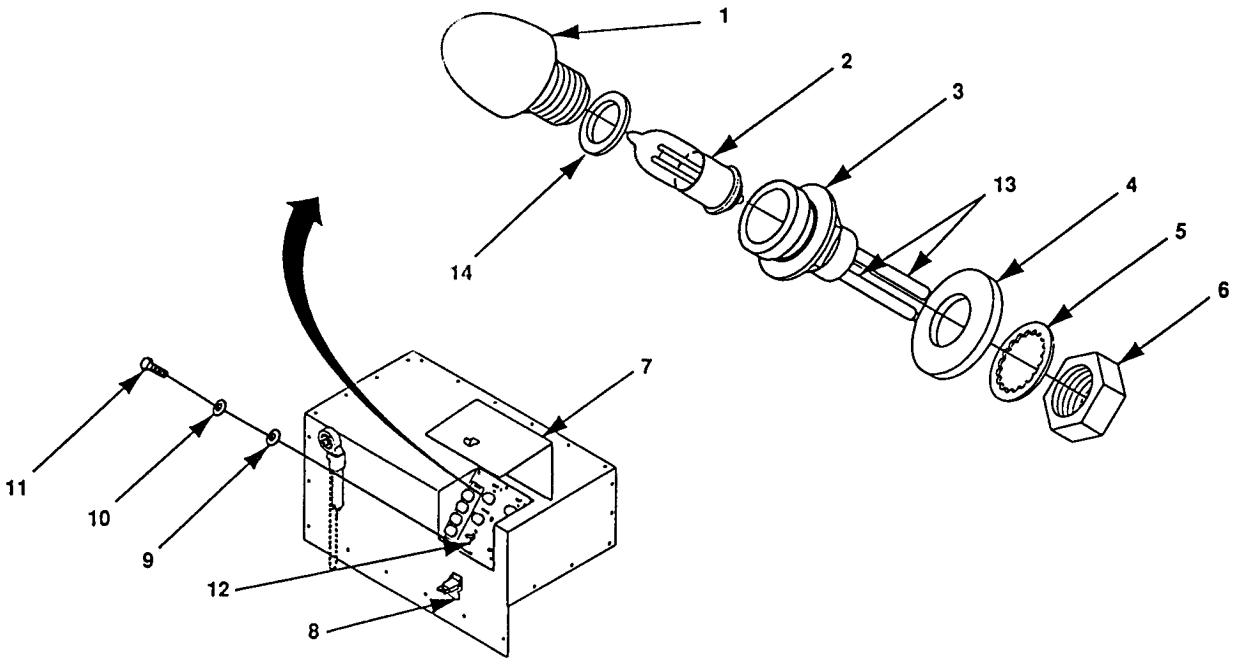

Figure 4-14. Indicator Light Replacement

TEST

Using multimeter, measure continuity between pins (13). If continuity replace lamp (2). If no continuity replace indicator housing (3).

INSTALLATION

1. Remove mounting nut (6), internal tooth lock washer (5), and O-ring (4) from new indicator housing (3).

2. Install O-ring (4) on indicator housing (3) and insert indicator housing (3) through control panel assembly (12).

3. Install internal tooth lock washer (5) on indicator housing (3).

4. Install mounting nut (6) on indicator housing (3).

5. Solder wires to the applicable terminals (13) and remove tags.

6. Position control panel assembly (12) with gasket on switch box cover (15) and align mounting holes.

7. Install eight lock washers (10), flat washers (9) and screws (11) that secure control panel assembly (12).

8. Install lens (1), O-ring (14), and lamp (2).

9. Close the control panel access cover (7) and secure with clamping catch (8).

4-17 SWITCH BOX LOAD TERMINAL MAINTENANCE.

This task covers: a. Removal
b. Repair
c. Installation

INITIAL SETUP

Tools

Tool Kit, General Mechanic's
(item 1, appendix B)

Materials/Parts

Terminal, Load
Wire, Round Steel, 0.072 inch diameter
QQ-W-423 Composition 302

Equipment Conditions

Reference

Both generator sets shut down, paragraph 2-5.3.1.
Trailer support devices are lowered, paragraph 2-3.2.1.

REMOVAL

1. Remove 21 screws (2, figure 4-15), lock washers (3), and flat washers (4).

2. Release clamping catch (5) and open load terminal door (1).

CAUTION

The control panel connector P3 is connected to connector J4. Movement of the switch box cover is limited. To prevent damage to control panel wiring harness, use caution removing switch box cover. Failure to observe this caution can result in equipment damage.

3. Carefully position switch box cover (15) in front of switch box assembly.

4. Disconnect P3 (6) from J4 (7).

5. Remove switch box cover (15).

6. Disconnect external load terminal lead from the defective terminal (14).

NOTE

For removal of ground load terminal go to step 8.

7. Remove nut (8), internal tooth lock washer (9), and leads (10) from defective load terminal (14).

8. Remove nut (11) that secures the load terminal (14) to the mounting plate.

9. Remove load terminal (14).

REPAIR

NOTE

Repair consists of replacing a missing or damaged bail. Removal of terminal is not required. Any other damage to the terminal requires replacement. The bail is fabricated using bulk wire National Stock Number (NSN) 9505-00-235-5071.

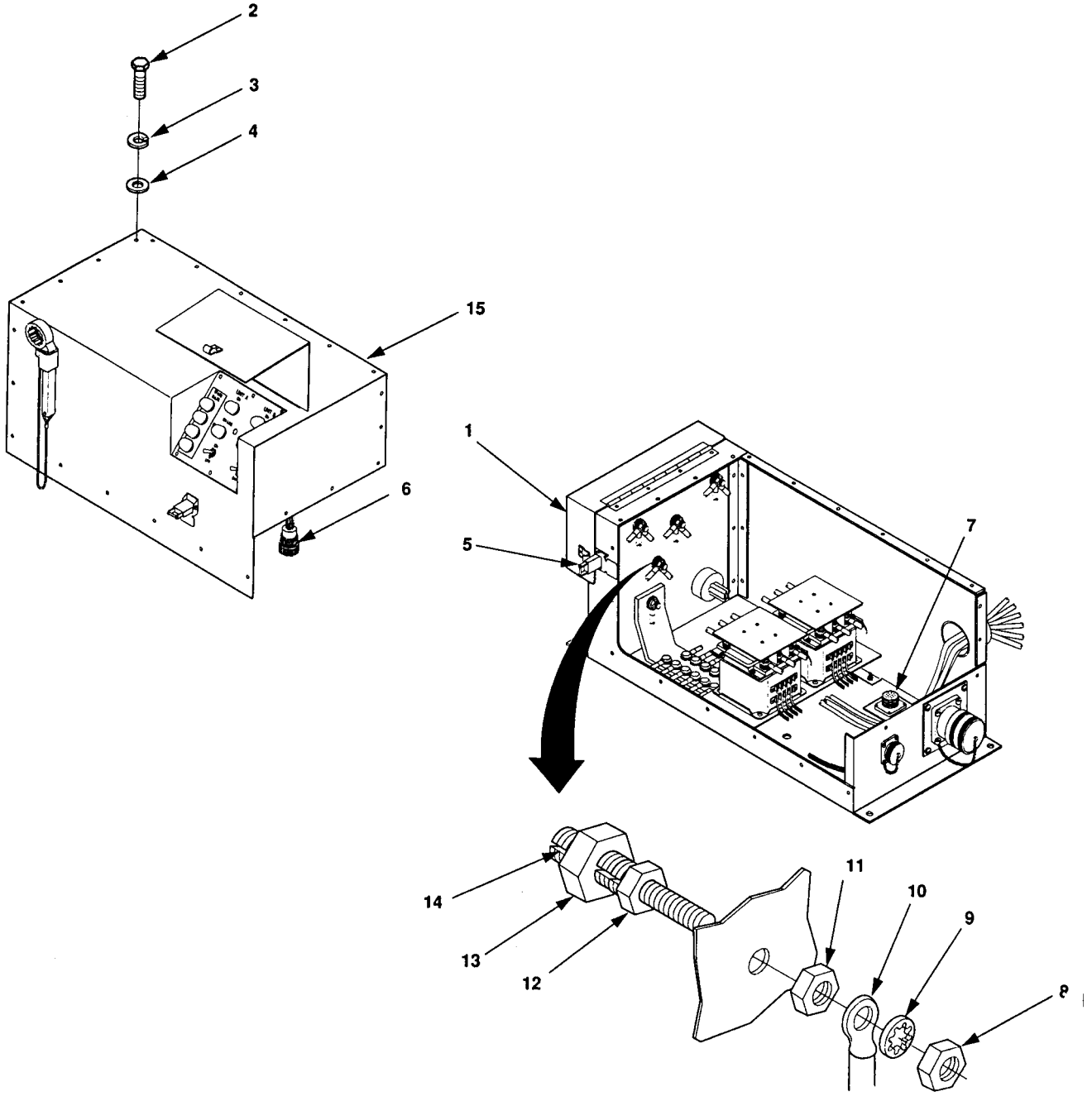

Figure 4-15. Switch Box Load Terminal Maintenance.

1. Release clamping catch (5) and open load terminal door (1).
2. Cut off 5 3/4 inches of bulk wire.
3. Make sure nut (13) is installed on terminal body (14).
4. Fabricate and install terminal clip in accordance with figure 4-16.
5. Close load terminal door (1, figure 4-15) and secure with clamping catch (5).

INSTALLATION

1. Position new load terminal (14) on mounting plate so that alignment pin fits in hole provided.
2. Install and tighten nut (11).
3. Install leads (10).
4. Install internal tooth lock washer (9) and nut (8) on load terminal (14).
5. Close the load terminal door (1) and secure with clamping catch (5).
6. Connect P3 (6) to J4 (7).
7. Position the switch box cover (15) over switch box assembly and align the mounting holes.
8. Install twenty-one lock washers (3), flat washers (4), and screws (2).

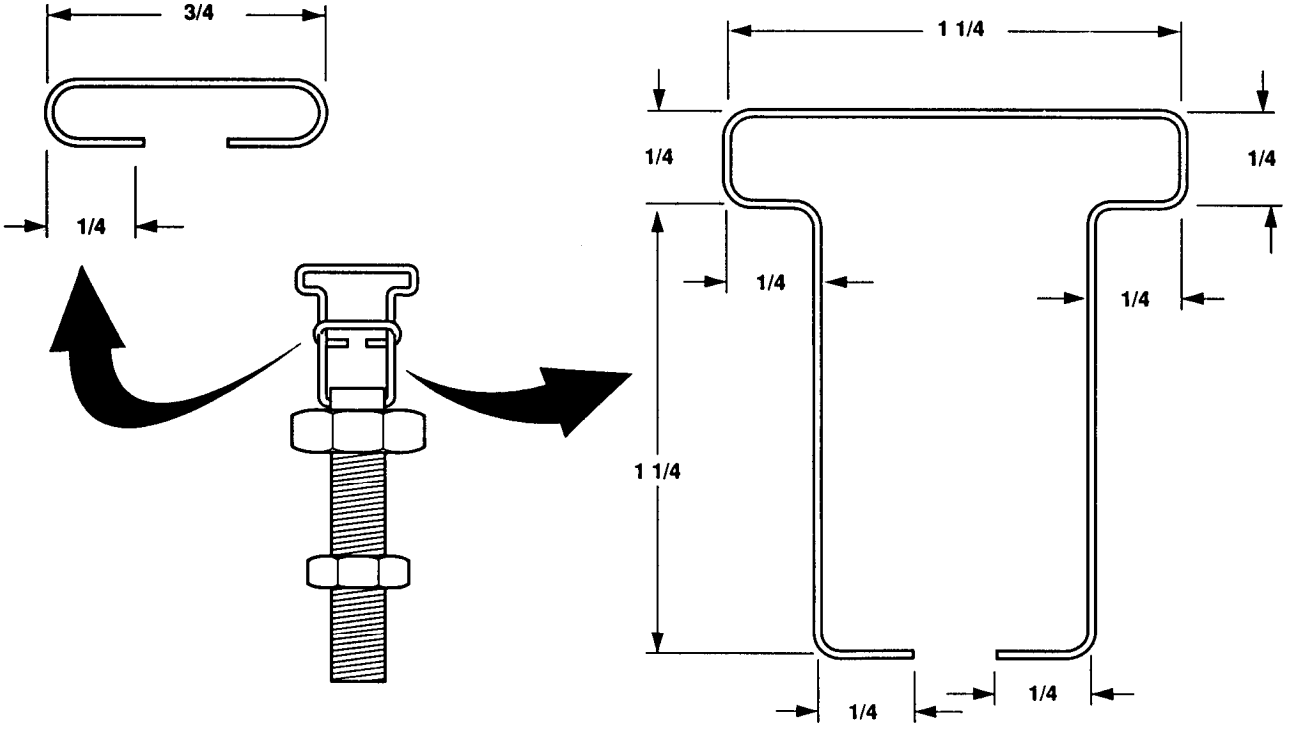

Figure 4-16. Switch Box Load Terminal Repair.

4-18 REAR STEPS MAINTENANCE.

This task covers: a. Removal b. Installation

INITIAL SETUP

Tools

Tool Kit, General Mechanic's (item 1, appendix B)

Materials/Parts

Nut, Self-locking

Equipment Conditions

Reference

Trailer support devices are lowered, paragraph 2-3.2.1.

REMOVAL

1. To remove either rear step, remove two self-locking nuts (5, figure 4-17), flat washers (3), and bolts (2) that secure rear step (4) to trailer frame. Discard self-locking nuts.

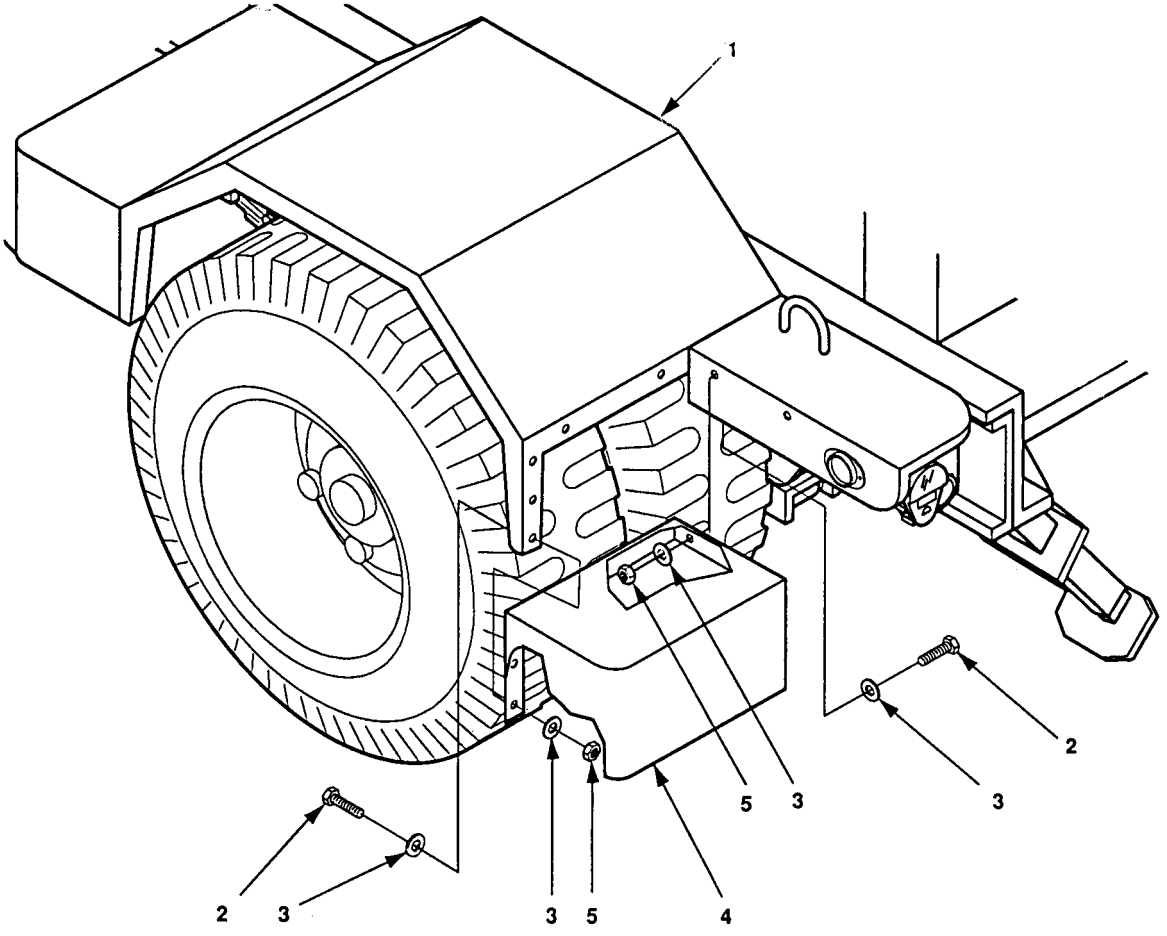

Figure 4-17. Rear Step Replacement.

2. Remove five self-locking nuts (5), flat washers (3), and bolts (2), that secure rear step (4) to fender (1). Discard self-locking nuts.

3. Remove rear step (4) from trailer.

INSTALLATION

1. Position rear step on trailer frame and align five mounting holes of the rear step (4) and fender (1).

2. Install five bolts (2) ten flat washers (3), and five new self-locking nuts (5) that secure the rear step (4) to fender (1). Do not tighten bolts.

3. Install two bolts (2), four flat washers (3), and two new self-locking nuts (5) to secure rear step (4) to trailer frame.

4. Tighten all bolts.

4-19 ACCESSORY BOX MAINTENANCE.

This task covers: a. Removal
b. Repair
c. Installation

INITIAL SETUP

Tools

Tool Kit, General Mechanic's (item 1, appendix B)
Drill, 1/4-inch (item 2, appendix B)
Riveter, Blind Head (item 5, appendix B)

Materials/Parts

Nuts, Self-locking
Rivets, Blind Head
Washers, Lock (item 1, appendix I)

Equipment Conditions

Reference

Trailer support devices are lowered, paragraph 2-3.2.1.

REMOVAL

1. Release clamping catches (1, figure 4-18) and open accessory box cover (4).

2. Remove any stored accessories from accessory box (5).

NOTE

The 1 ton trailer uses four mounting screws. Also, accessory box mounting hardware for PU-801A trailer (plain nuts, lock washers, flat washers, and cap screws) differs from that used on other trailers, but removal and installation procedures are similar.

3. Remove five self-locking nuts (8), flat washers (2 and 7), and bolts (3) that secure accessory box (5) to trailer chassis (6).

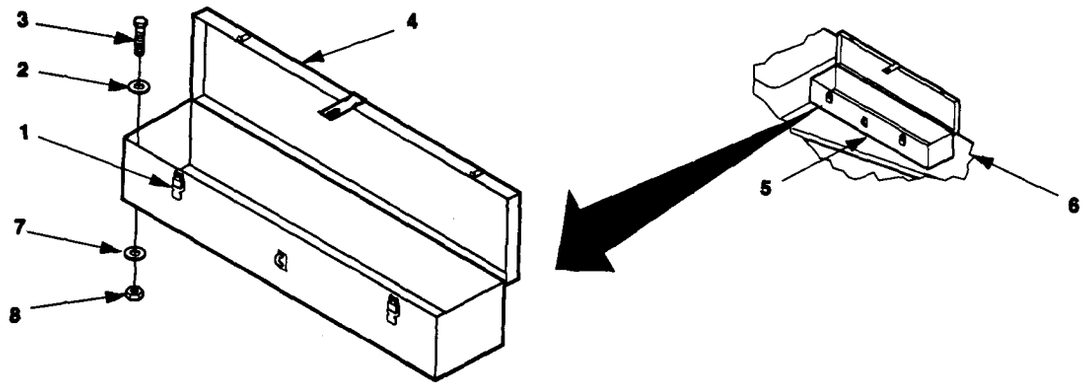

Figure 4-18. Accessory Box Maintenance,

4. Lift accessory box (5) off trailer chassis (6).

REPAIR

Refer to paragraph 4-14 and replace clamping catches.

INSTALLATION

1. Position accessory box (5) over mounting holes in trailer chassis (6).
2. Install five bolts (3), flat washers (2 and 7), and new self-locking nuts (8) that secure accessory box (5).
3. Store accessories removed in step 2 of the removal procedure in accessory box (5).
4. Close accessory box cover (4) and secure with clamping catches (1).

4-20 STRAP ASSEMBLY MAINTENANCE.

This task covers: a. Removal b. Installation

INITIAL SETUP

Tools

Tool Kit, General Mechanic's (item 1, appendix B)

Materials/Parts

Washer, Lock

Equipment Conditions

Reference

Trailer support devices are lowered, paragraph 2-3.2.1.

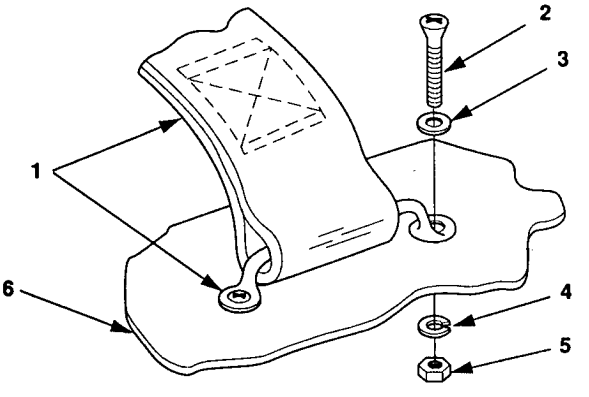

Figure 4-19. Strap Assembly Maintenance.

REMOVAL

1. Remove two nuts (5, figure 4-19), lock washers (4), flat washers (3), and screws (2) that secure strap assembly (1) to trailer chassis.

2. Remove strap assembly (1).

INSTALLATION

1. Position strap assembly (1) over mounting holes.

2. Install two screws (2), new lock washers (4) and nut (5) that secure strap assembly.

4-21. 2 1/2 TON TRAILER FENDER Maintenance.

This task covers: a. Removal b. Installation

INITIAL SETUP

Tools

Tool Kit, General Mechanic's (item 1, appendix B)

Materials/Parts

Nut, Self-locking

Equipment Conditions

Reference

Trailer support devices are lowered, paragraph 2-3.2.1.

Personnel Rewired

Two

REMOVAL

1. Remove seventeen self-locking nuts (5, figure 4-20), flat washers (4), bolts (2), and flat washers (3) securing fender (1) to trailer frame. Discard self-locking nuts.

2. Remove fender (1).

INSTALLATION

1. Position fender (1) on trailer.

2. Install one bolt (2) on front step (6) and one bolt (2) on rear step (7), leaving new self-locking nuts loose.

3. Install fifteen bolts (2), flat washers (3 and 4), and new self-locking nuts (5). Tighten all self-locking nuts.

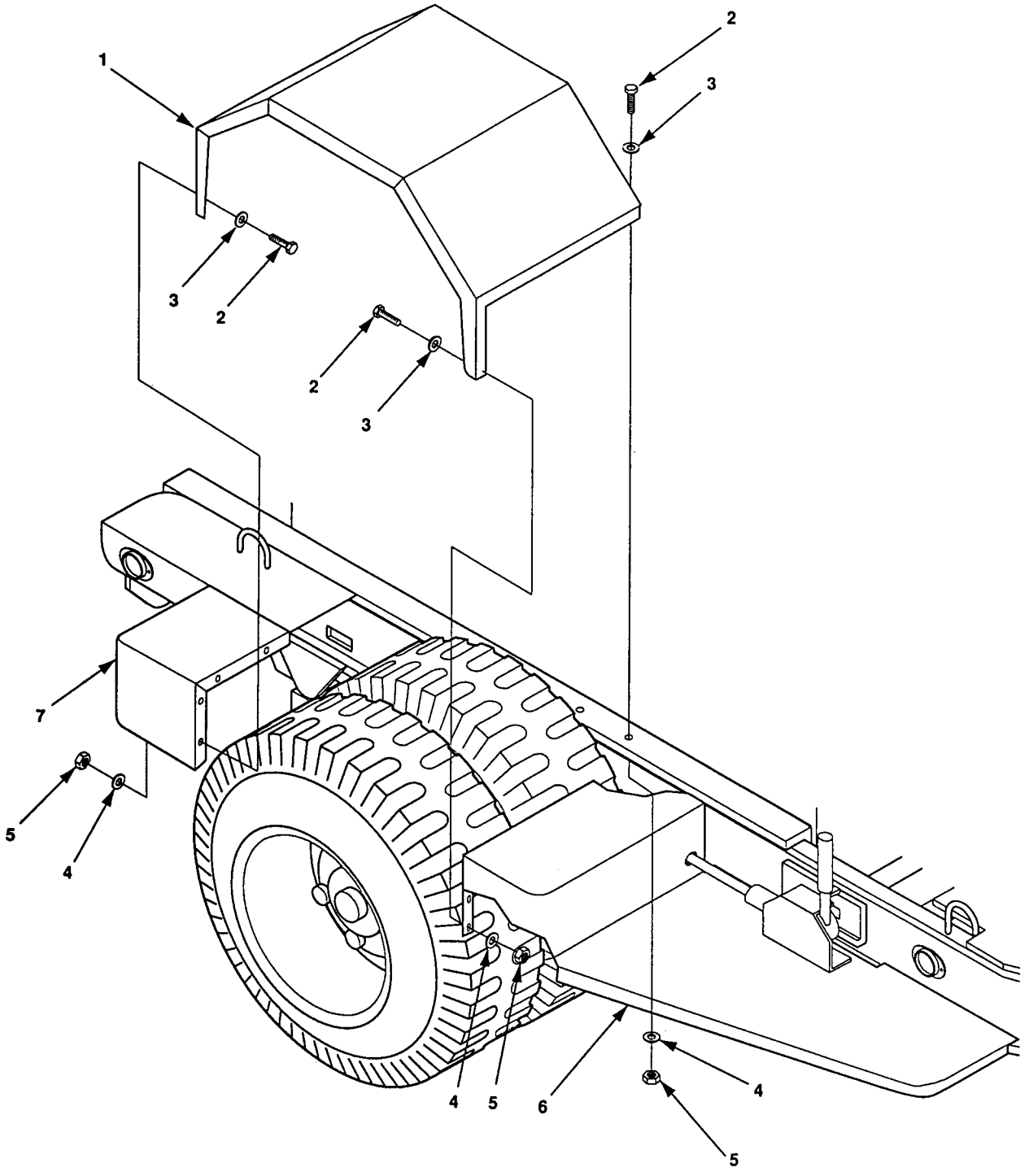

Figure 4-20. Fender Replacement, 2 1/2 Ton Trailer

4-22 1 TONTRAILER FENDER MAINTENANCE.

This task covers: a. Removal b. Installation

INITIAL SETUP

Tools

Tool Kit, General Mechanic's (item 1, appendix B)

Materials/Parts

Nut, Self-locking

Equipment Conditions

Reference

Generator set shut down, paragraph 2-5.3.1
Trailer support devices are lowered, paragraph 2-3.2.1.

Personnel Required

Two

REMOVAL

NOTE

When replacing fender, remove fire extinguisher bracket for use on new fender.

1. Remove four self-locking nuts (7, figure 4-21), flat washers (8), and bolts (9), and remove bracket.
2. Remove and discard six self-locking nuts (1), flat washers (2 and 3), and bolts (4). Remove fender (5).
3. Remove deck covering by peeling from fender.

INSTALLATION

1. Position fender (5) on trailer.
2. Install six bolts (4), flat washers (2 and 3), and self-locking nuts (1).
3. Install fire extinguisher bracket (6), screws (9), flat washers (8), cap screws (9), and bracket (10).
4. Install deck covering.

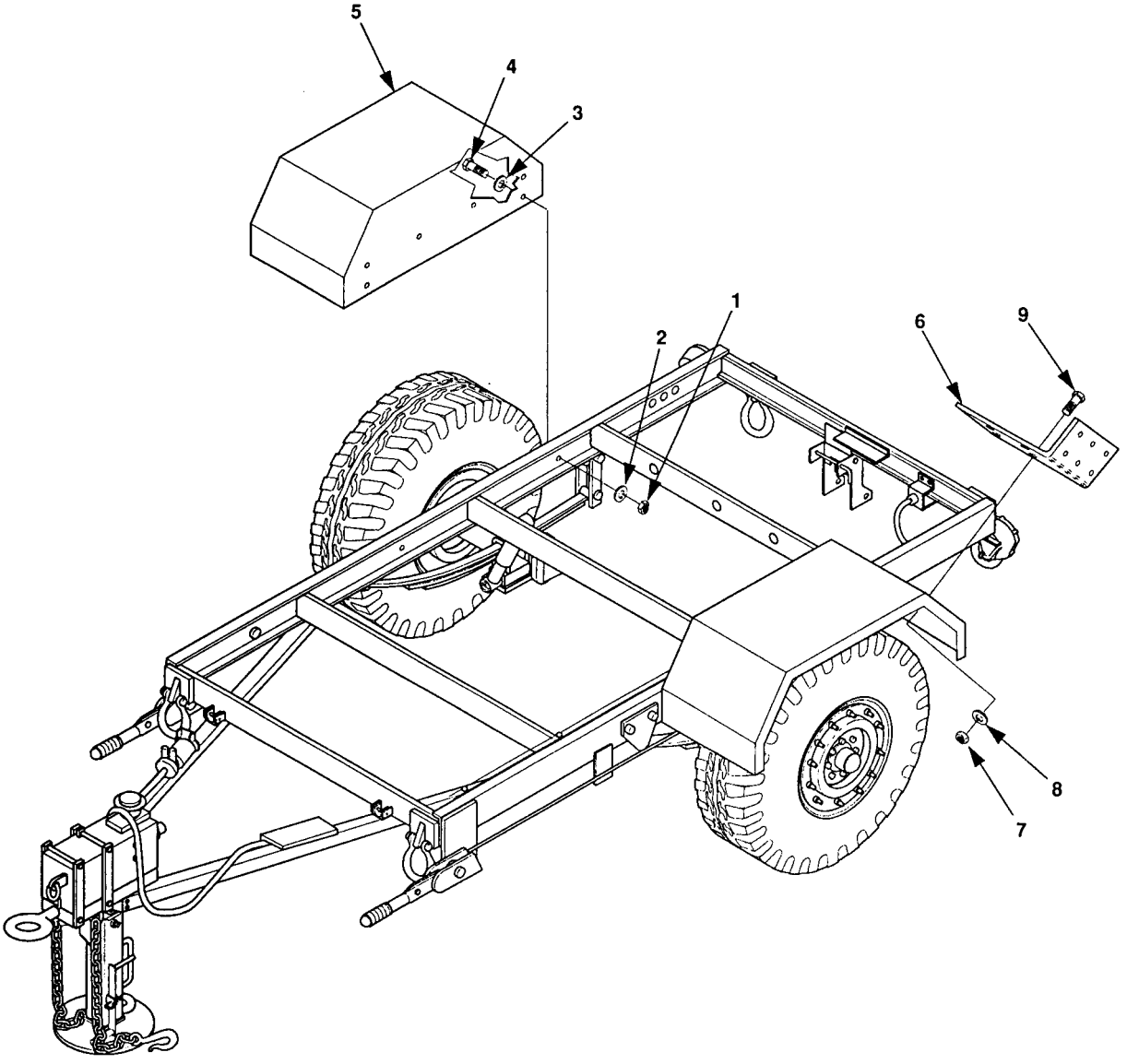

Figure 4-21. Fender Replacement, 1 Ton Trailer.

4-23 FRONT STEPS MAINTENANCE.

This task covers: a. Removal b. Installation

INITIAL SETUP

Tools

Tool Kit, General Mechanic's
(item 1, appendix B)

Materials/Parts

Cotter pin (TM 9-2330-205-14&P)
Nut, Self-locking

Equipment Conditions

Reference

Trailer support devices are lowered, paragraph 2-3.2.1.

REMOVAL

1. When replacing roadside front step, remove fire extinguisher bracket. When replacing curbside front step, remove accessory box (paragraph 4-19).

2. Release brake.

3. Remove cotter pin (13, figure 4-22), spacer (16), and clevis pin (22) securing handbrake cable to handbrake lever mechanism (15).

4. Remove two screws (14) that secure handbrake bracket (19) to trailer frame.

5. Remove two self-locking nuts (21), flat washers (18) and screws (17) securing handbrake bracket (19) to front step (3). Discard self-locking nuts.

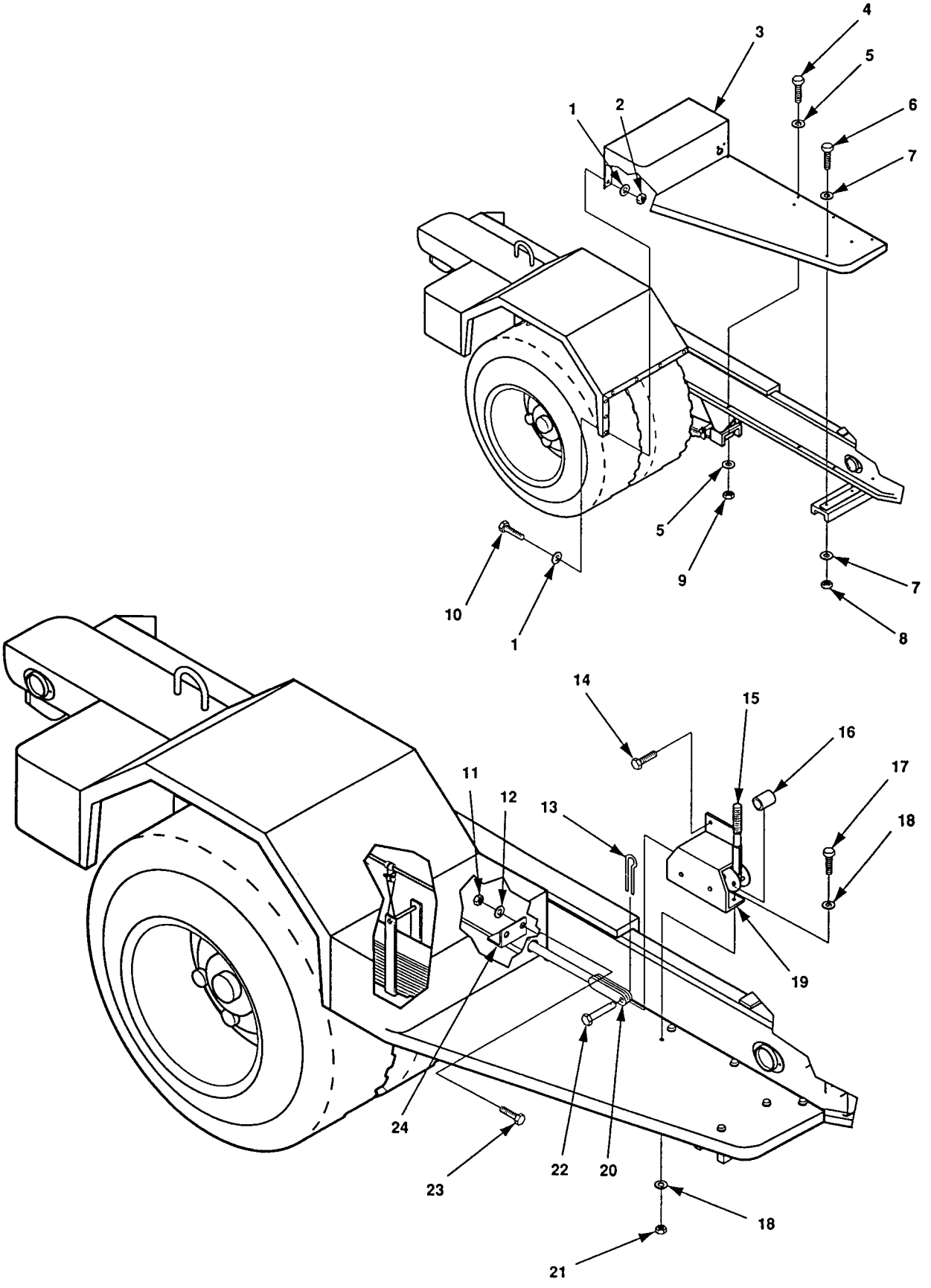

Figure 4-22 Front Step Replacement.

6. Remove handbrake bracket (19) and handbrake mechanism.

7. Remove two self-locking nuts (11), flat washers (12), and screws (23) that secure brake cable bracket (24) to front step (3). Remove cable (20). Discard self-locking nuts.

8. Remove seven self-locking nuts (2), flat washers (1), screws (10), and flat washers (1) securing front step (3) to front edge offender. Discard self-locking nuts.

9. Remove three self-locking nuts (9), flat washers (5), screws (4), and flat washers (5) securing the front step (3) to trailer flame. Discard self-locking nuts.

10. Remove five self-locking nuts (8), flat washers (7), and screws (6) securing front step (3) to chassis. Discard self-locking nuts.

11. Remove front step (3).

INSTALLATION

1. Position front step (3) on cross braces and trailer frame. Insert handbrake cable (20) through hole in front step (3).

2. Install five screws (6), flat washers (7), and new self-locking nuts (8) that secure front step (3) to channel.

3. Install three screws (4), flat washers (5), and new self-locking nuts (9) that secure front step (3) to trailer frame.

4. Install seven screws (10), flat washers (1), and new self-locking nuts (2) that secure front step (3) to fender.

5. Install two screws (23), flat washers (12), and new self-locking nuts (11) that secure bracket to front step (3).

6. Position handbrake bracket (19) and handbrake lever mechanism (15) on front step.

7. Install two screws (14) that secure cable bracket to front step.

8. Position handbrake cable (20) on handbrake lever mechanism (15). Insert clevis pin (22) and spacer (16), and secure with cotter pin (14).

9. Install either fire extinguisher bracket or accessory box removed in step 1. Refer to paragraph 4-19 to install accessory box. Install fire extinguisher bracket.

4-24 2 1/2 TON TRAILER FRONT PLAT FORM Maintenance.

This task covers: a. Removal b. Installation

INITIAL SETUP

Tools

Tool Kit, General Mechanic's
(item 1, appendix B)

Materials/Parts

Nut, Self-locking
Washers, Lock

Equipment Conditions

Reference
Trailer support devices are lowered, paragraph 2-3.2.1.

REMOVAL

1. When removing the front platform on unit A refer to paragraph 4-12 and remove switch box. Remove two hex nuts (8, figure 4-23), flat washers (2), two lock washers (7), and two screws (1) that secure the two switch box supports (3).

2. Remove fifteen self-locking nuts (9), thirty-six flat washers (6 and 10), and fifteen screws (5) that secure the platform (4) to the trailer. Discard self-locking nuts.

3. Remove front platform.

NOTE

Three flat washers (10) are used under the platform on each side to shim the platform.

INSTALLATION

1. Position new front platform (4) on the trailer over mounting holes.

2. Install fifteen screws (5), thirty-six flat washers (6 and 10), and fifteen new self-locking nuts (9) to secure platform (4).

3. When replacing front platform for Unit A, refer to paragraph 4-12 and install switch box assembly. Install two screws (1), new lock washers (7), four flat washers (2), and two nuts (8), that secure switch box supports.

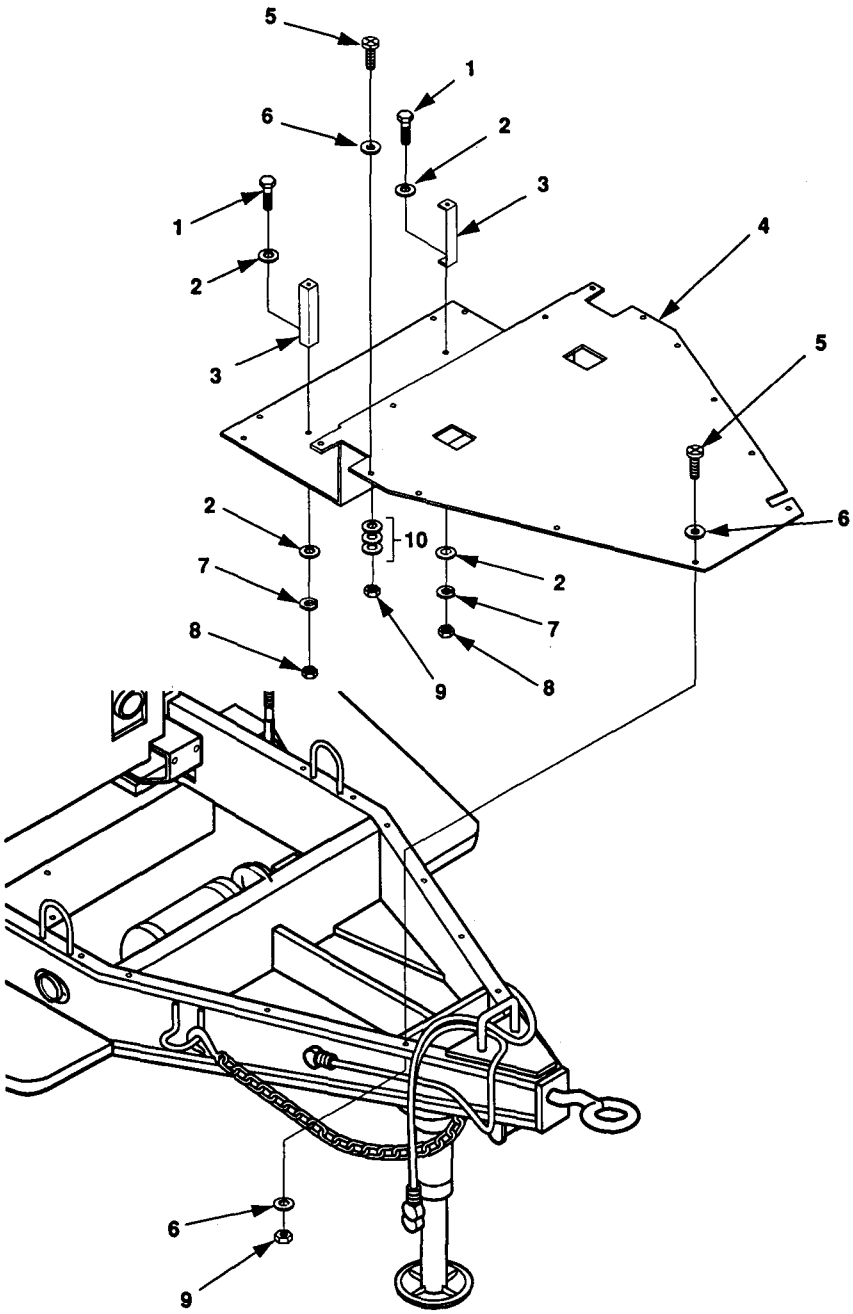

Figure 4-23. Front Platform Replacement, 2 1/2 Ton Trailer.

4-25 1 TON TRAILER FRONT PLATFORM MAINTENANCE.

This task covers: a. Removal b. Installation

INITIAL SETUP

Tools

Tool Kit, General Mechanic's (item 1, appendix B)

Materials/Parts

Nut, Self-locking

Equipment Conditions

Reference

Trailer support devices are lowered, paragraph 2-3.2.1.

REMOVAL

1. Refer to paragraph 4-19 and remove accessory box (1, Figure 4-24).
2. Remove four self-locking nuts (2), flat washers (3), screws (4), and front platform (5).

INSTALLATION

1. Install front platform (5), screws (4), flat washers (3), and self-locking nuts (2).
2. Refer to paragraph 4-19 and install accessory box (1).

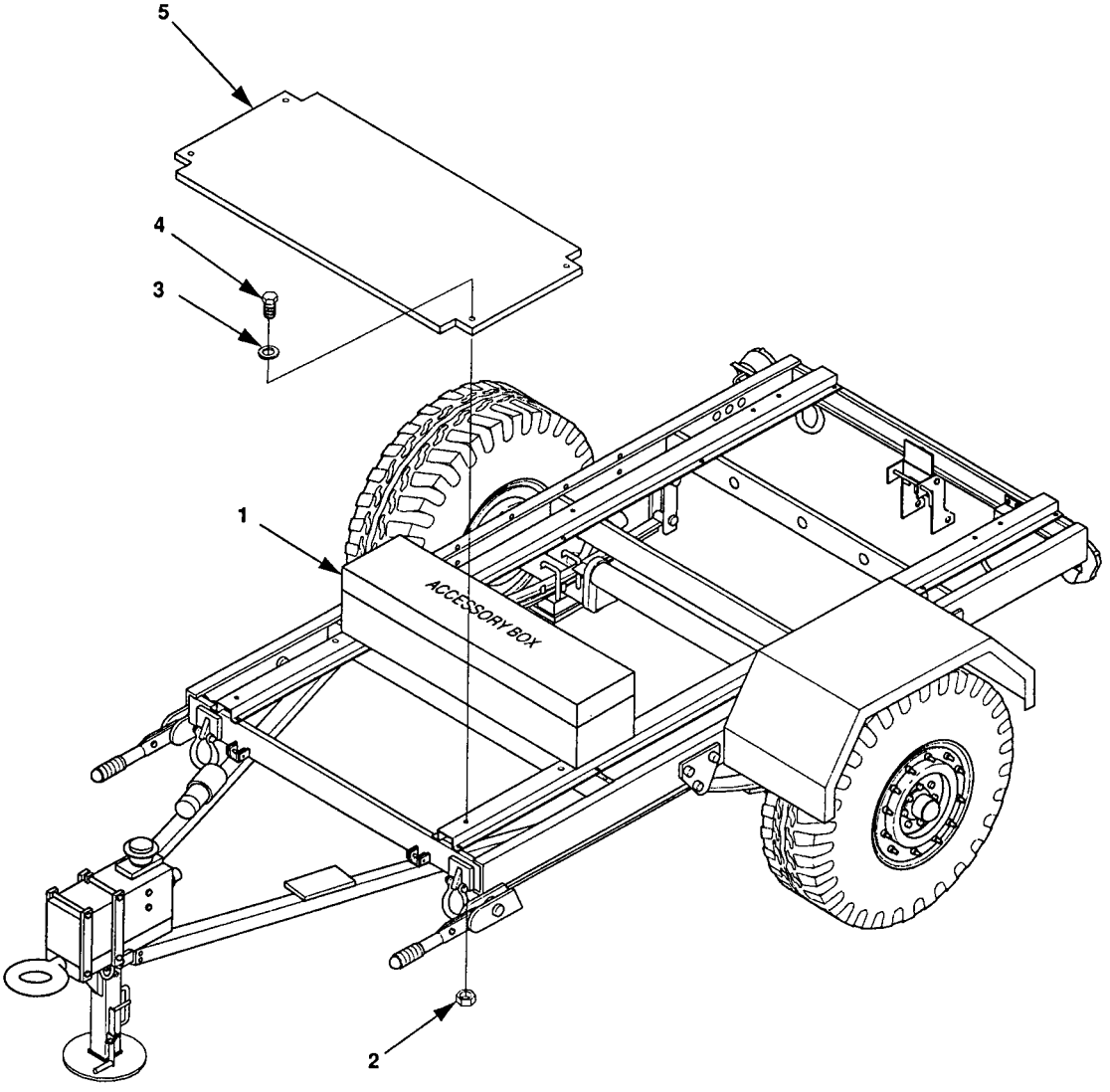

Figure 4-24. Front Platform Replacement, 1 Ton Trailer.

4-26 1 TON TRAILER REFLECTOR MAINTENANCE.

This task covers: a. Removal b. Installation

INITIAL SETUP

Tools

Tool Kit, General Mechanic's
(item 1, appendix B)

Materials/Parts

Nuts, Self-locking

Equipment Conditions

Reference
Trailer handbrakes set, front support leg lowered, and rear leg prop assembly lowered; paragraph 2-3.2.1

REMOVAL

Remove two self-locking nuts (1, figure 4-25), flat washers (2), and screws (4), and remove reflector (3).

INSTALLATION

Install reflector (3) with two screws (4) flat washers (2), and new self-locking nuts (1).

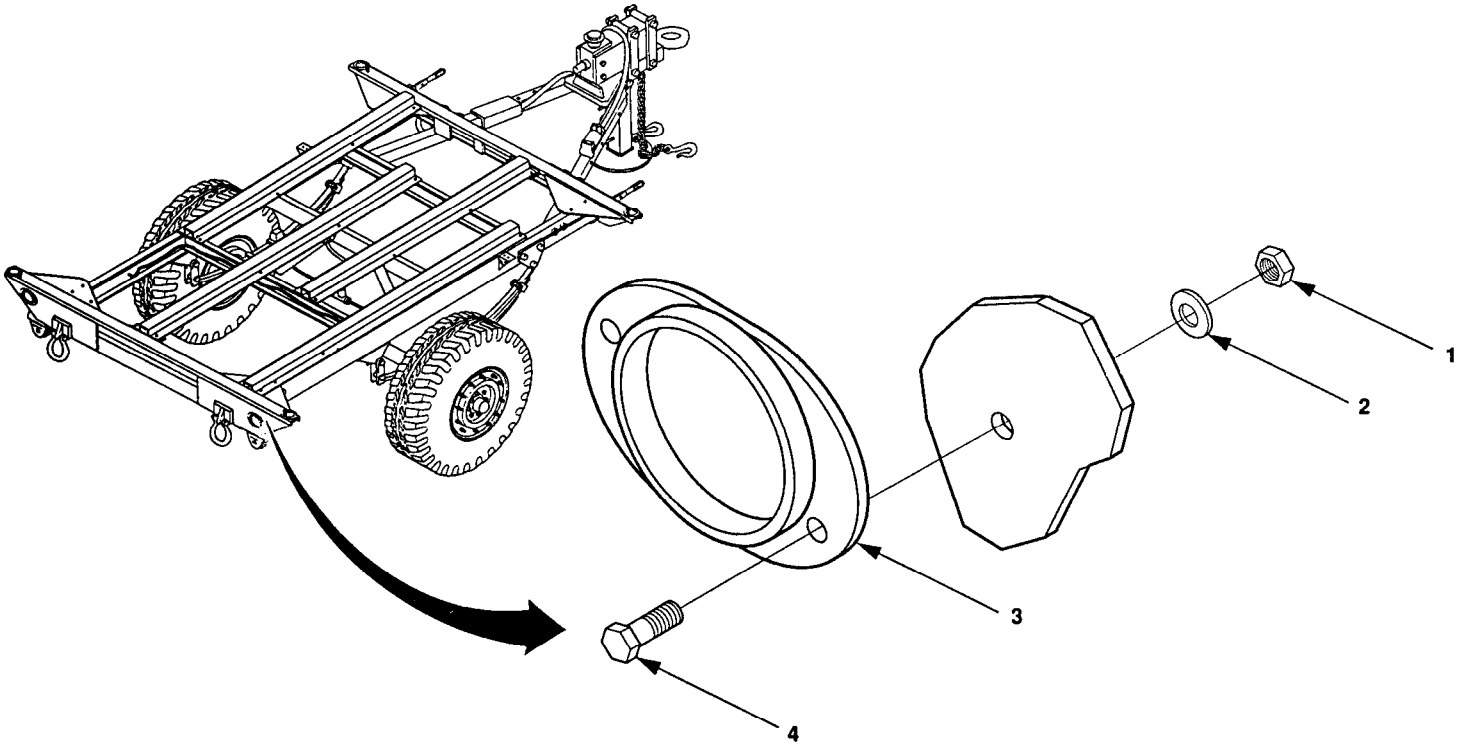

Figure 4-25 Reflector Replacement, 1 Ton Trailer

4-27 1 TON TRAILER LEVELING-SUPPORT JACK MAINTENANCE.

This task covers: a. Removal
b. Repair
c. Installation

INITIAL SETUP

Tools

Tool Kit, General Mechanic's
(item 1, appendix B

Materials/Parts

Pin, Cotter
Nut, Self-locking
Pin, Spring
Fitting, Lubrication (if needed)
Grease, GAA (item 2, Appendix E)

Equipment Conditions

Reference

Trailer handbrakes set, power plant landing leg or power unit front support leg lowered; paragraph 2-3.2.1.
Generator set shut down, paragraph 2-5.3.1

REMOVAL

WARNING

Before removing trailer leveling-support jack, support rear of trailer with jack stands. Failure to observe this warning can cause severe injury and/or death.

1. Support rear of trailer with jack stands.
2. Turn leg base (11, figure 4-26) to take weight off leveling-support jack.
3. Remove either one of two cotter pins (16 or 7) from pivot shaft (15) and discard.
4. Hold leg base (11) steady and remove pivot shaft (15) with remaining cotter pin (16 or 7) in place.
5. Lift leg base (11) slightly to take weight off retaining pin (8) and remove retaining pin (8). Move leg base (11) and attached parts out of bracket (6).
6. Remove two self-locking nuts (4), four flat washers (5 and 9), and two screws (10).
7. Remove self-locking nut (3), two flat washers (2 and 14), and screw (13). Remove bracket (6) from trailer chassis.

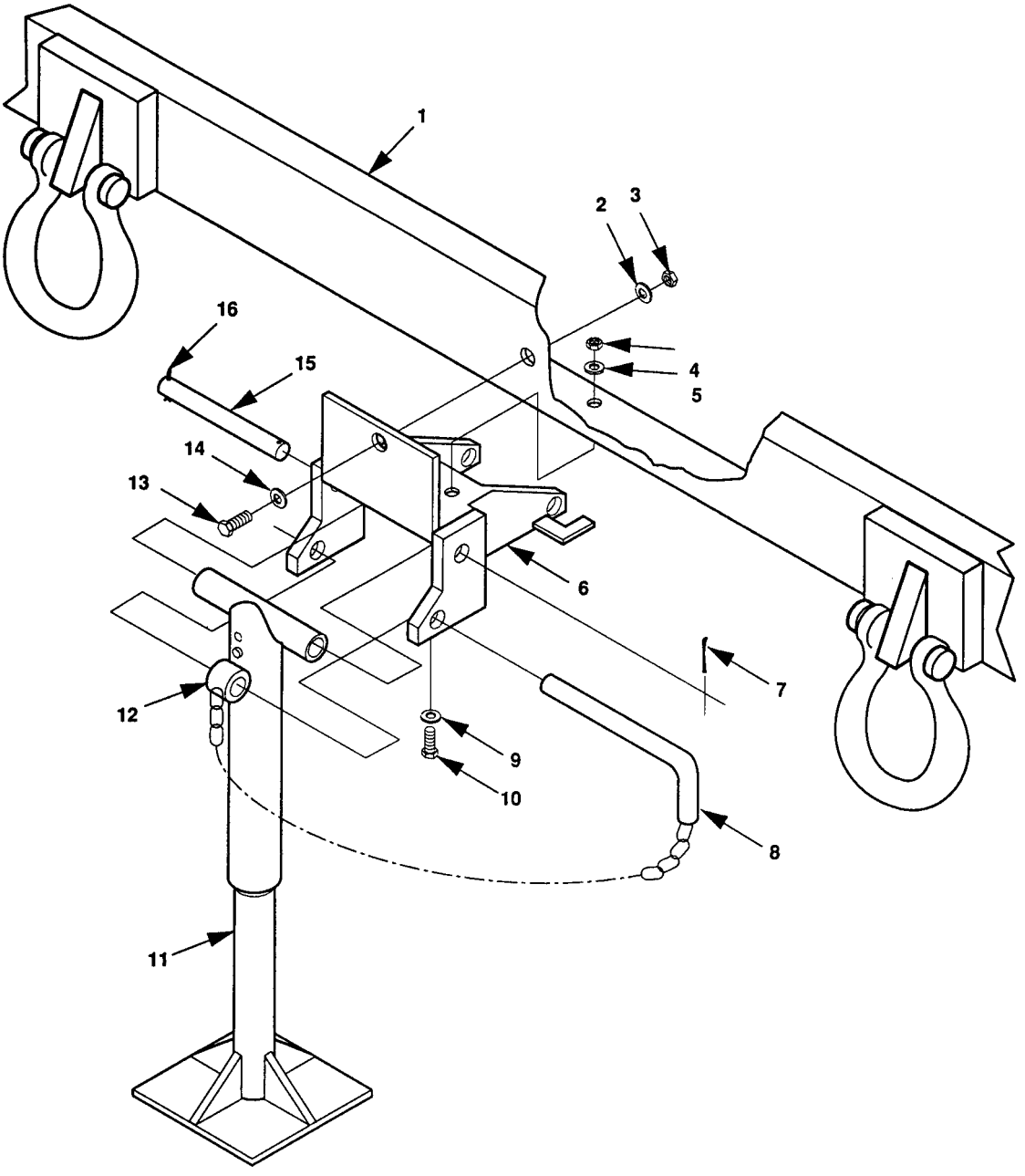

Figure 4-26. Leveling-Support Jack Replacement, 1 Ton Trailer.

REPAIR

WARNING

Before removing trailer leveling-support jack, support rear of trailer with jack stands. Failure to observe this warning can cause severe injury and/or death.

NOTE

Disassemble the trailer leveling-support jack only to the extent necessary to replace worn, defective, or damaged parts.

1. Disassemble trailer leveling-support jack.

   a. Clamp leg assembly in a vise with spring pin (2, Figure 4-27) facing up.

   b. Drive the spring pin (2) out of upper leg (1) and remove leg base (4).

   c. If defective, remove lubrication fitting (3).

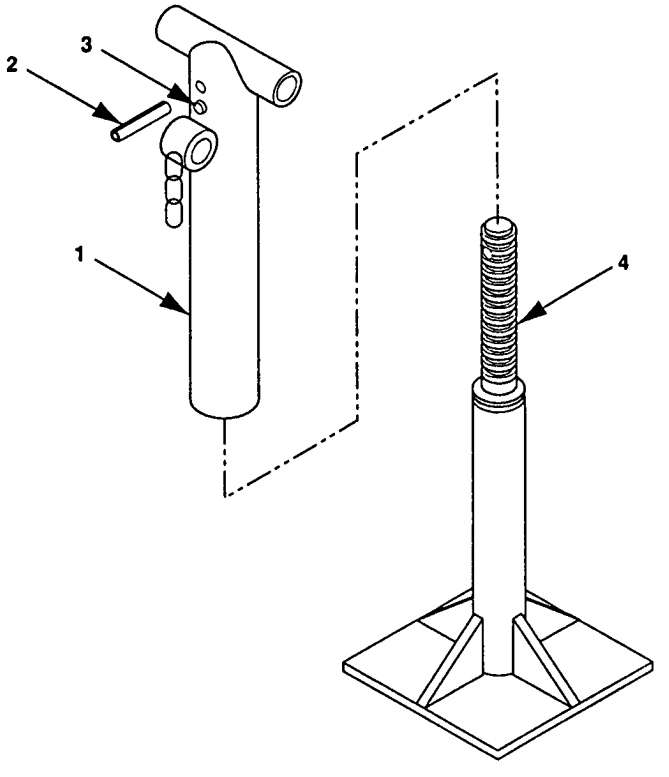

Figure 4-27. Leveling-Support Jack Repair, 1 Ton Trailer.

2. Assemble trailer leveling-support jack.

   a. If removed in disassembly, install lubrication fitting (3).

   b. Clamp upper leg (1) in a vise with spring pin hole facing up.

   c. Insert leg base (4), align hole and install a new spring pin (2).

INSTALLATION

WARNING

Before removing trailer leveling-support jack, support rear of trailer with jack stands. Failure to observe this warning can cause severe injury and/or death.

1. Install bracket (6, figure 4-26) on trailer chassis (1), with flat washer (14) and screw (13), through mounting hole in bracket (6) on trailer chassis.

2. Install flat washer (2) and a new self-locking nut (3) on screw (13).

3. Install screws (10), flat washers (9 and 5), and new self-locking nuts (4).

4. Position leg base (11) in bracket (6) and install retaining pin (8).

5. Position leg base (11) and install pivot shaft (15).

6. Install new cotter pin (16 or 7) in pivot shaft (15).

7. Lube leveling-support jack.

4-28 FIRE EXTINGUISHER BRACKET MAINTENANCE.

This task covers: a. Removal b. Installation

INITIAL SETUP

Tools

Tool Kit, General Mechanic's (item 1, appendix B)

Materials/Parts

Nut, Self-locking

Equipment Conditions

Reference

Trailer handbrakes set, front support leg/landing leg lowered, and rear leveling-support jack lowered; paragraph 2-3.2.1.

REMOVAL

1. Remove fire extinguisher from bracket.

2. Remove four self-locking nuts, flat washers, cap screws, and remove fire extinguisher.

INSTALLATION

1. Install fire extinguisher bracket, four cap screws, flat washers, and self-locking nuts. Tighten self-locking nuts.

2. Place fire extinguisher in bracket.

4-29 DATA PLATE REPLACEMENT (HIGH MOBILITY TRAILER).

This task covers: a. Removal b. Installation

INITIAL SETUP

Tools

Tool Kit, General Mechanic's (item 1, appendix B)
Rivet Gun (item 8, appendix B)

Materials/Parts

Rivets (item 3, appendix I)

Equipment Conditions

Reference

Trailer handbrakes set, front support leg/landing leg lowered, and rear leveling-support jack lowered; paragraph 2-3.2.1.

REMOVAL

Remove rivets (1, figure 4-28) and data plate (l).

INSTALLATION

Position data plate (2) on trailer and install rivets (l).

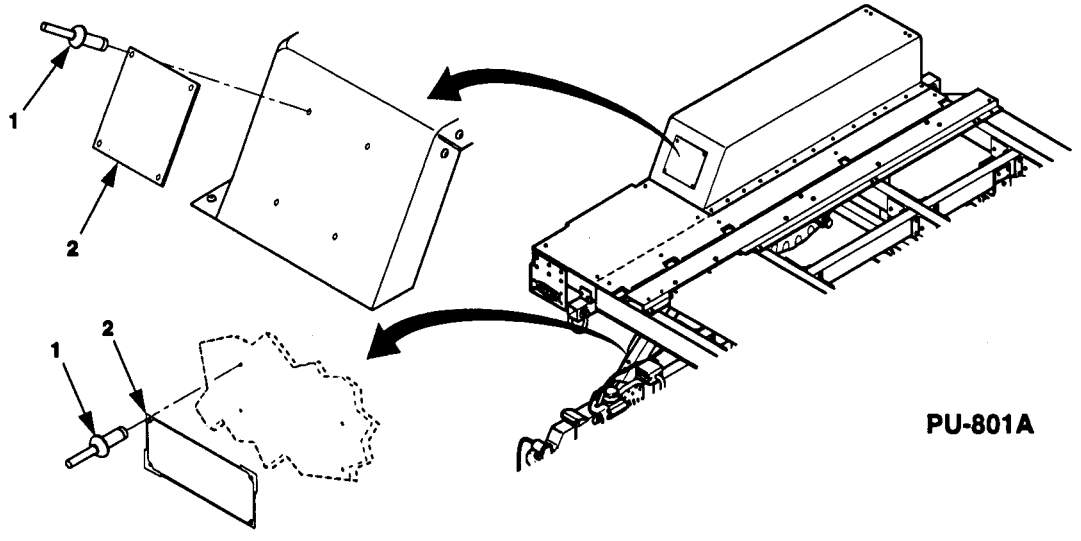

Figure 4-28. Data Plate Replacement (High Mobility Trailer).

4-30 PU-801A GROUND STUD REPLACEMENT.

This task covers: a. Removal b. Installation

INITIAL SETUP

Tools

Tool Kit, General Mechanic's (item 1, appendix B)

Materials/Parts

Washer, Lock (item 4, appendix I)

Equipment Conditions

Reference

Trailer handbrakes set and front support leg/landing leg lowered; paragraph 2-3.2.1.

Both generator sets shut down; paragraph 2-5.3.3

REMOVAL

1. Loosen nut (1, figure 4-29) and remove ground wire (2) from ground stud (3).

2. Remove nut (4), lock washer (5), flat washer (6), and ground stud (3).

INSTALLATION

1. Install ground stud (3), flat washer (6), lock washer (5), and nut (4). Tighten nut (4).

2. Install ground wire (2) in slot of ground stud (3) and tighten nut (1).

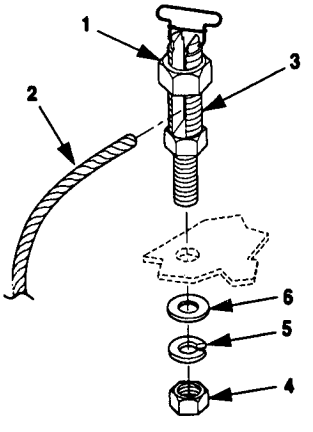

Figure 4-29. PU-801A Ground Stud Replacement.

Section VII. ADMINISTRATIVE STORAGE

4-31 ADMINISTRATIVE STORAGE.

4-31.1 Short Term Storage. This type of storage is used when the equipment is expected to be stored from 1 to 45 days. The storage maybe at destination after domestic shipment, or maybe administrative storage when there is a shortage of maintenance manpower. For administrative storage:

a. Perform current maintenance services and serviceability criteria evaluations before placing equipment in administrative storage. Correct shortcomings and deficiencies and check that all modification work orders have been applied.

b, If possible, select an inside storage site. If inside storage is not available, a truck, van, conex container, or other container may be used.

c. When in administrative storage, the equipment should be capable of being made mission ready within 24 hours unless a different time frame is directed by the approving authority.

4-31.2 Intermediate Term Storage. This type of storage is used when the equipment is expected to be stored from 45 to 180 days. Level A or B preservation and packing may be required.

4-31.3 Long Term Storage. This type of storage is used when the equipment is expected to be stored for more than 180 days. Level A preservation and packing maybe required.

CHAPTER 5

DIRECT SUPPORT MAINTENANCE

Subject Index — Page

Section I. REPAIR Parts; SPECIAL TOOLS; TEST, MEASUREMENT, AND DIAGNOSTIC EQUIPMENT (TMDE); AND SUPPORT EQUIPMENT

5-1 COMMON TOOLS AND EQUIPMENT.

For Authorized common tools and equipment refer to the Modified Table of Organization and Equipment (MTOE) applicable to your unit.

5-2 SPECIAL TOOLS, TMDE, AND SUPPORT EQUIPMENT.

No special tools or support equipment are required for maintenance of the power units or power plant. Refer to TM 9-6115-643-24P for generator set and TM 9-2815-254-24P for engine, TM 9-2330-202-14&P for 1 ton trailer, TM 9-2330-392-14&P for high mobility trailer, and TM 9-2330-205-14&P for 2 1/2 ton trailer.

5-3 REPAIR PARTS.

Refer to TM 9-6115-643-24P for generator set and TM 9-2815-254-24P for engine. Refer to TM 9-2330-202-14&P for 1 ton trailer parts, TM 9-2330-392-14&P for high mobility trailer parts, and TM 9-2330-205-14&P for 2 1/2 ton trailer parts. Power Plant and Power Unit repair parts not covered in the generator, engine, or trailer RPSTL are listed and illustrated in Appendix F.

Section II. TROUBLESHOOTING

5-4. GENERAL.

Refer to TM 9-6115-643-24 for generator set troubleshooting procedures, and to TM 9-2815-254-24 for engine troubleshooting procedures. Refer to TM 9-2330-205-14&P for 2 1/2 ton trailer troubleshooting procedures, TM 9-2330-202-14&P for 1 ton trailer troubleshooting procedures, and TM 9-2330-392-14&P for high mobility trailer troubleshooting procedures. The symptom index for the power plant lists faults associated with switch box assembly operation. Figures 5-1 through 5-9 provide a go-no-go flowchart of each malfunction. Each malfunction listed includes a reference to the applicable figure that contains a chart to help you determine probable causes end corrective actions to take. The symptom index cannot list all faults that may occur, nor all the tests or inspections and corrective actions. If a malfunction is not listed or cannot be corrected by listed corrective actions, notify next higher level of maintenance for assistance.

SYMPTOM INDEX

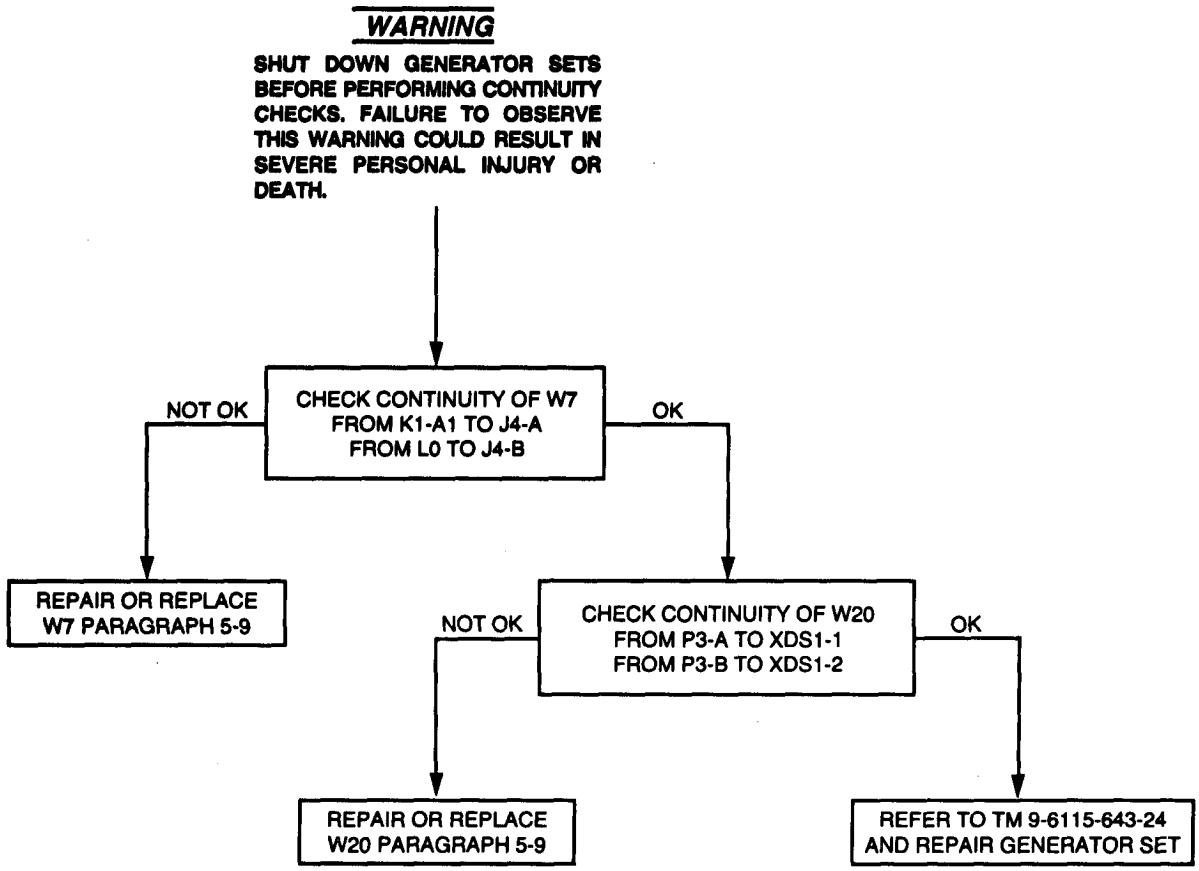

Figure 5-1. Unit a ON light With Generator Set AC CIRCUIT INTERRUPTER Switch Closed.

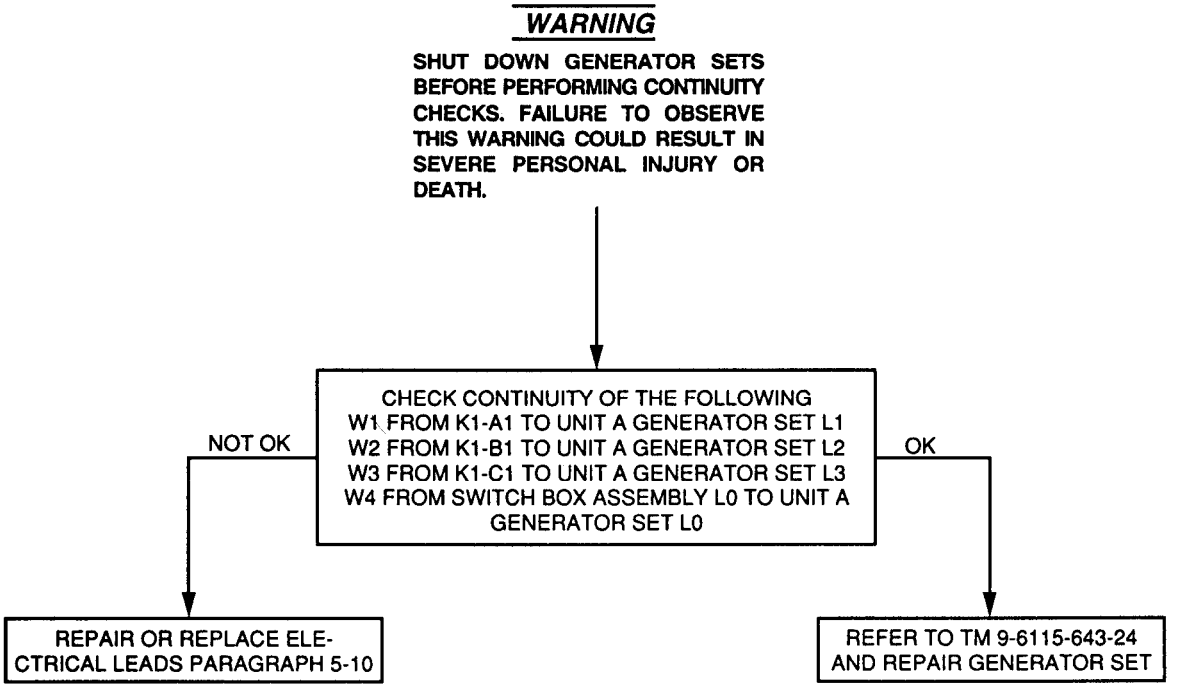

Figure 5-2. Unit A Has No Input Power to K1.

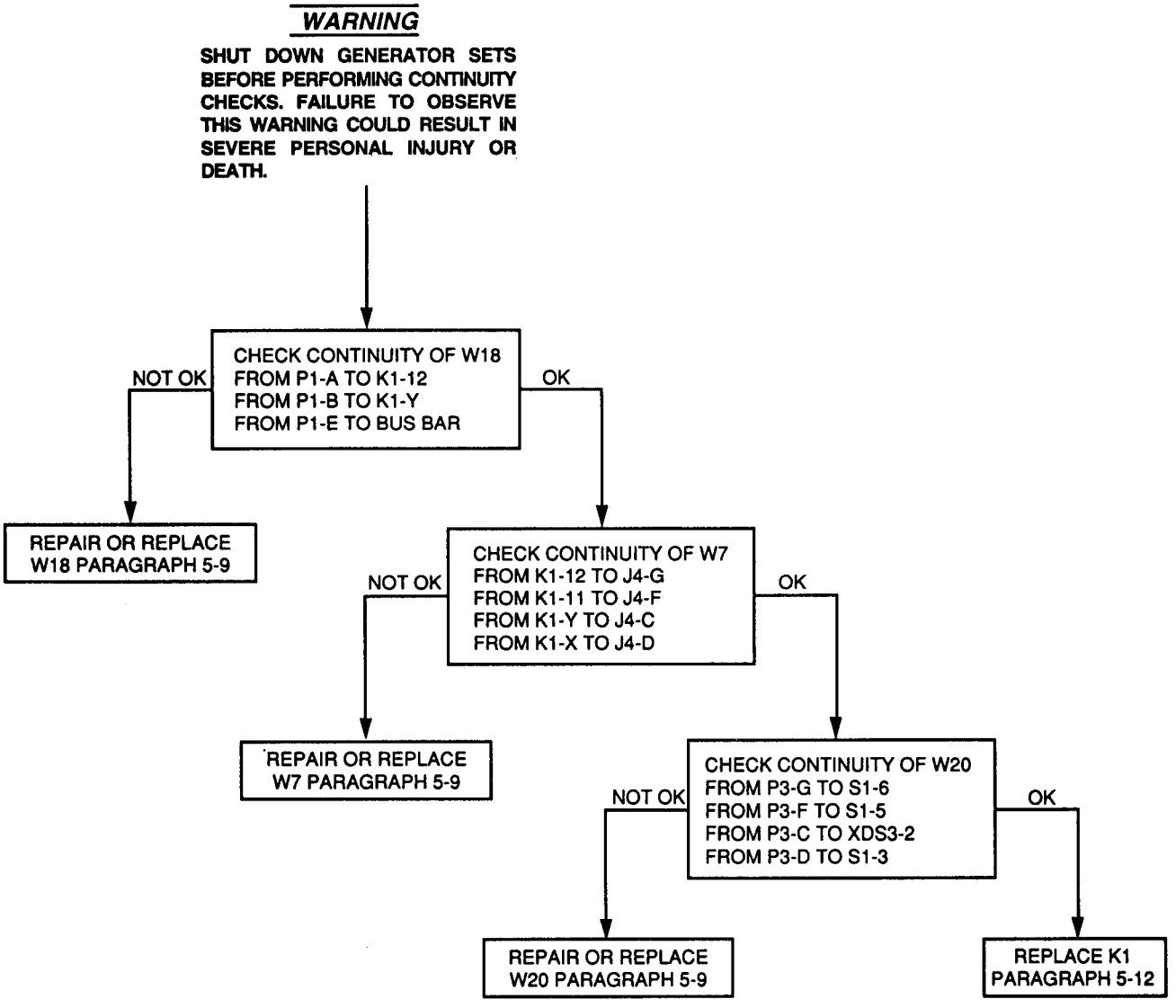

Figure 5-3. Unit A Has No Output Power from K1.

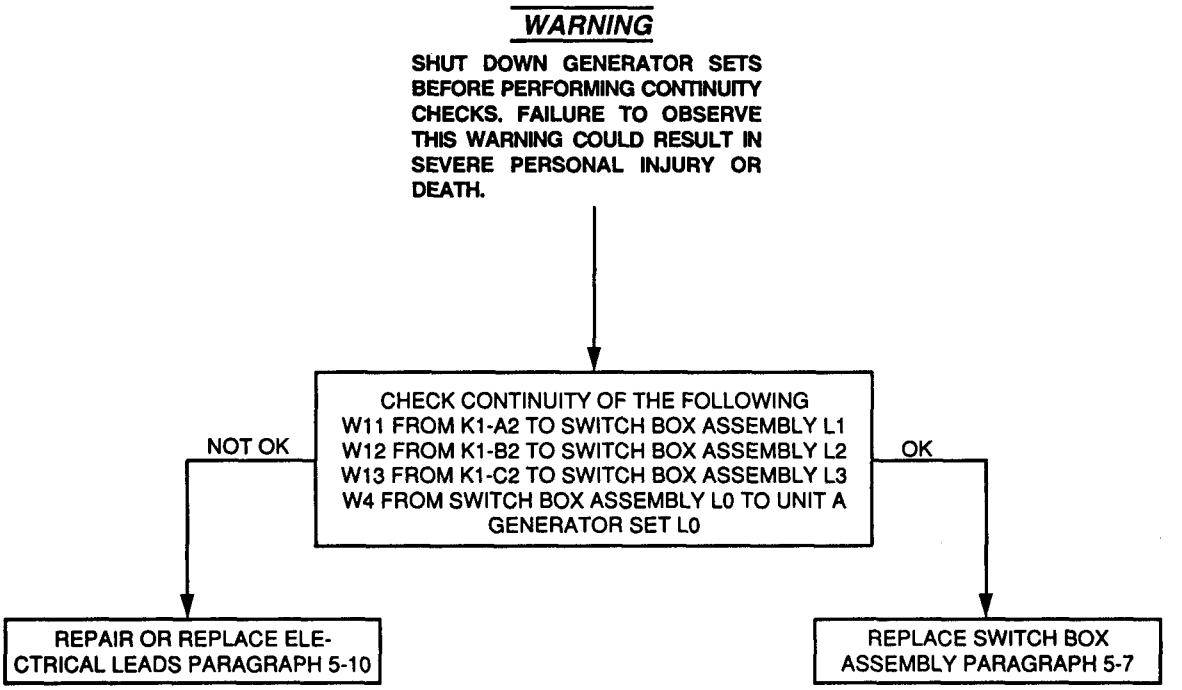

Figure 5-4. Unit A Has Output Power from K1 But No Output at One or More Load Terminals.

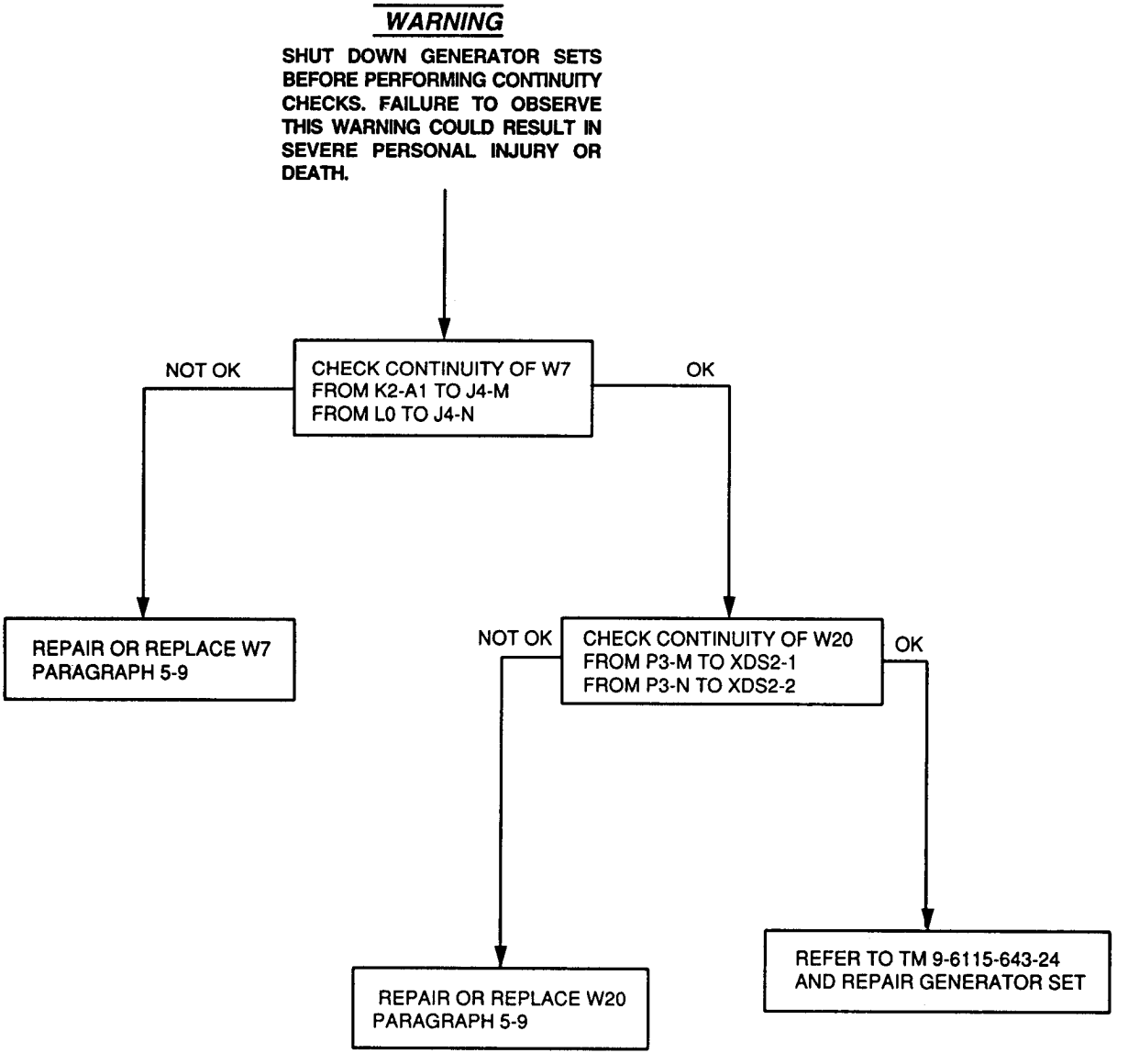

Figure 5-5. Unit B ON Lamp Does Not Light With Generator Set AC CIRCUIT INTERRUPTER Switch Closed.

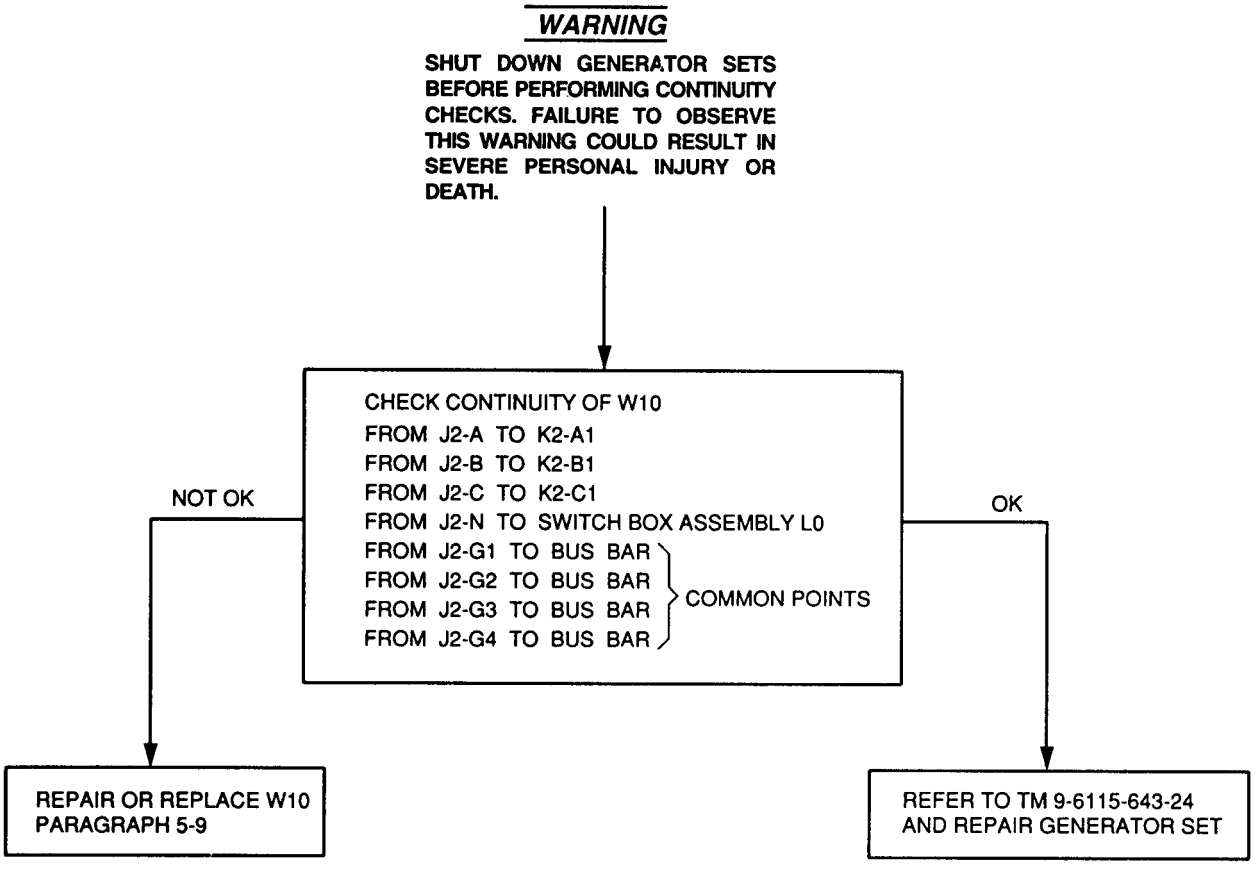

Figure 5-6. Unit B Has No Input Power to K2.

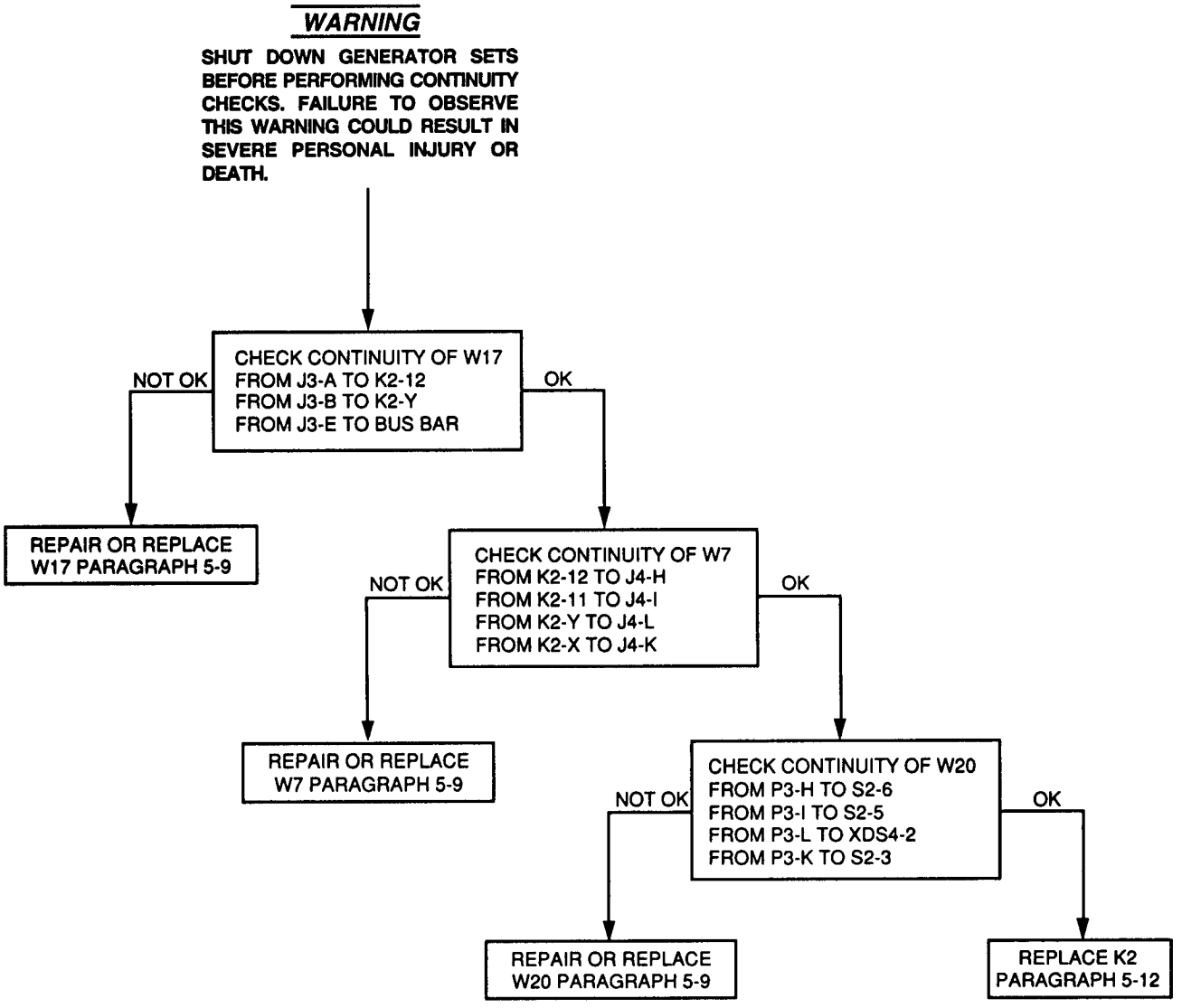

Figure 5-7. Unit B Has No Output Power from K2.

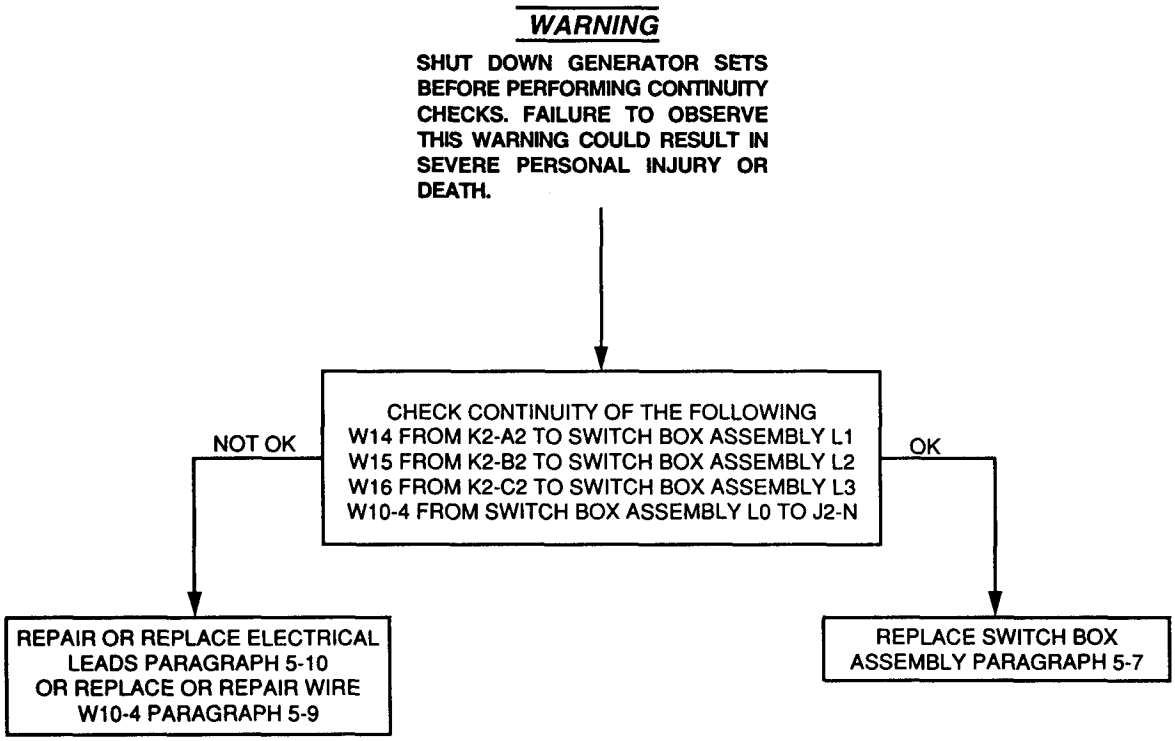

Figure 5-8. Unit B Has Output Power from K2 But No Output at One or More Load Terminals.

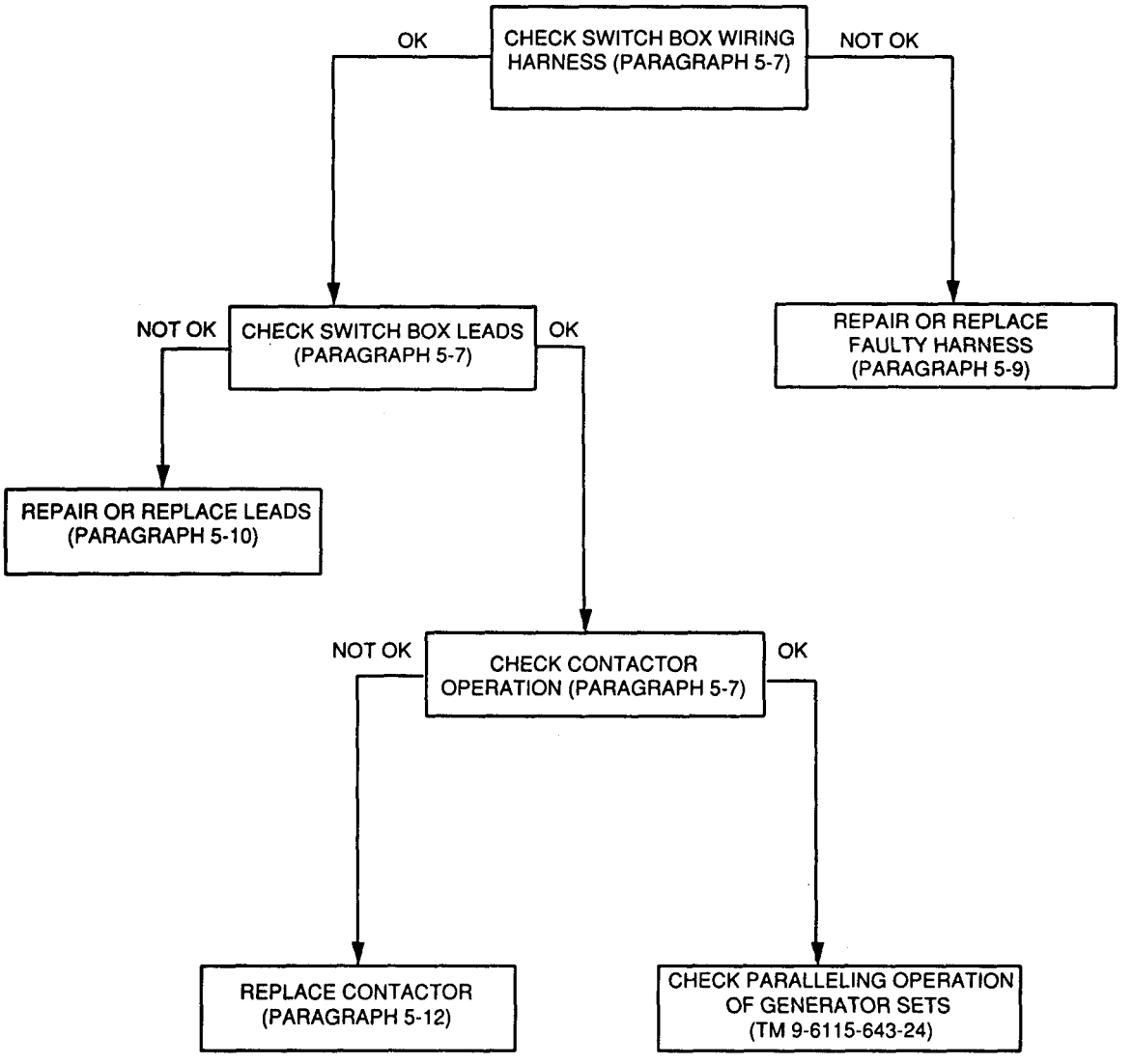

Figure 5-9. Power Cable W19 and Paralleling Cable Are Good, But Unit Fails To Parallel Through Switch Box.

Section III. MAINTENANCE PROCEDURES

5-5 GENERAL.

Refer to TM 9-6115-643-24 for generator set maintenance, and to TM 9-2815-254-24 for engine maintenance. Refer to TM 9-2330-202-14&P for 1 ton trailer maintenance, TM 9-2330-205-14&P for 2 1/2 ton trailer maintenance, and TM 9-2330-392-14&P for high mobility trailer maintenance. Direct Support level maintenance procedures are provided in paragraphs 5-6 through 5-14.

5-6 REPLACE GENERATOR SET.

This task covers: a. Removal b. Installation

INITIAL SETUP

Tools

General Mechanic's Tool Kit (item 1, appendix B)
Lifting device with 6000 lb capacity

Materials/Parts

Nuts, Self-locking
Rope
Washer, Lock (item 5, appendix I)

Equipment Conditions

Reference

Both generator sets shut down, para 2-5.3.1.

Personnel Required

4

REMOVAL

1. When removing the generator set from unit A of the power plant, disconnect P1 (3, Figure 5-10) from generator set.

2. Loosen GND terminal of generator set and disconnect ground cable (5) from the generator set.

NOTE

Step 3 must be performed only if removing PU-801A generator set.

3. If removing PU-801A generator set, perform this step and then go to step (5). Remove four nuts (6), lock washers (11), eight flat washers (7), and four screws (1).

4. For all other units, remove the four screws (1), eight flat washers (7), and four self-locking nuts (6) securing the generator set to the trailer.

WARNING

When lifting the generator set, use lifting equipment with a minimum lifting capacity of 6000 lb. Do not stand under the generator set while it is being lifted. Do not permit generator set to swing. Failure to observe this warning can result in severe personal injury or death.

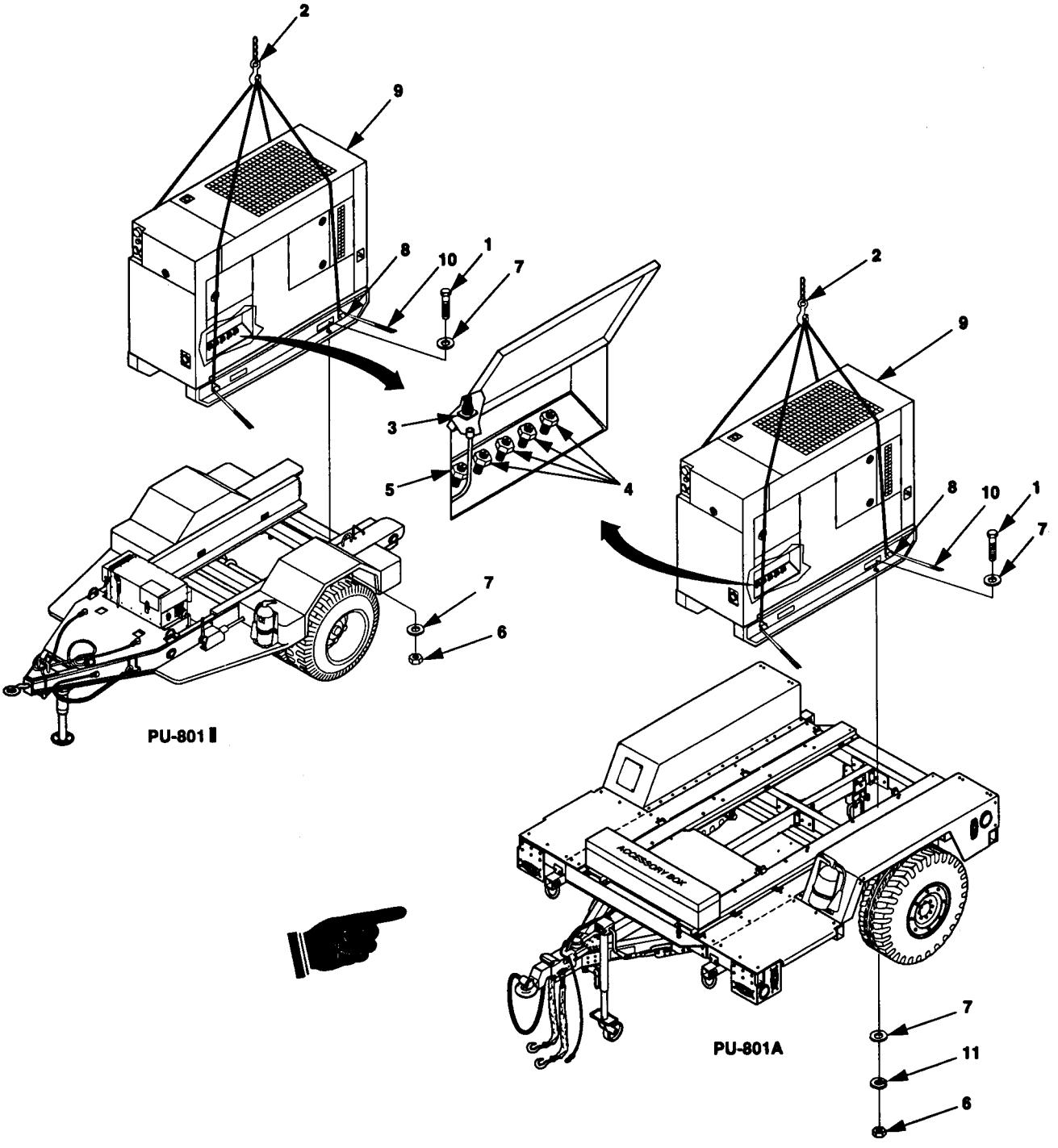

Figure 5-10. Generator Set Removal.

5. Attach lifting equipment (2) with a minimum lifting capacity of 6000 lb as shown in figure 5-10.

6. Insert ropes (10) through each of four lifting rings (8) on the generator set as shown in figure 5-10.

7. With one person at each rope (10) to steady and guide generator set (9), lift generator set.

INSTALLATION

WARNING

When lifting the generator set, use lifting equipment with a minimum lifting capacity of 6000 lb. Do not stand under the generator set while it is being lifted. Do not permit generator set to swing. Failure to observe this warning can result in severe personal injury or death.

1. Attach lifting equipment (2) with a minimum lifting capacity of 6000 lb as shown in figure 5-10.

2. Insert rope (10) through four lifting rings (8) on generator set (9).

3. With one person at each rope (10) to steady and guide the generator set (9), lift the generator set.

4. Guide generator set skids into position on the trailer and lower generator set onto trailer.

NOTE

Step 5 applies to all generator sets.

5. For PU-801A generator set, install four screws (6), eight flat washers (7), four lock washers, and plain nuts (6). For all other units, install four screws (1), eight flat washers (7), and four new self-locking nuts (6) that secure generator set (9).

6. Disconnect lifting equipment (2).

7. Route ground cable (5) through power cable sock on front of generator set (9).

8. Connect ground cable (5) to GND terminal of generator set and tighten nut.

9. Reconnect electrical leads (4) and P1 (3) to generator set when installing generator set on unit A.

5-7 SWITCH BOX ASSEMBLY MAINTENANCE.

This task covers: a. Replacement b. Test

INITIAL SETUP

Tools

General Mechanic's Tool Kit (item 1, appendix B)
Multimeter, AN/PSM-45 (item 2, appendix B)
Power Supply, 120 VAC (item 2, appendix B)

Materials/Parts

Washer, Lock

Equipment Conditions

Reference

Both generator sets shut down, para 2-5.3.1.
Trailer support devices are lowered, paragraph 2-8.2.1.

REPLACEMENT

Refer to paragraph 4-12 to remove and install switch box assembly.

TEST

1. Disassemble switch box assembly for test as follows:

   a. Remove 21 screws (1, figure 5-11), flat washers (3), and lock washers (2) that secure the switch box access cover (4) to the switch box assembly.

CAUTION

The control panel connector P3 is connected to connector J4. Movement of the switch box cover is limited. To prevent damage to control panel wiring harness, use caution removing switch box cover. Failure to observe this caution can result in equipment damage.

   b. Carefully position switch box access cover (4) in front of switch box.

   c. Disconnect P3 (8) from J4 (11) and set switch box cover (4) out of the way.

2. Remove two lamps for Unit A and two lamps for Unit B from switch box assembly.

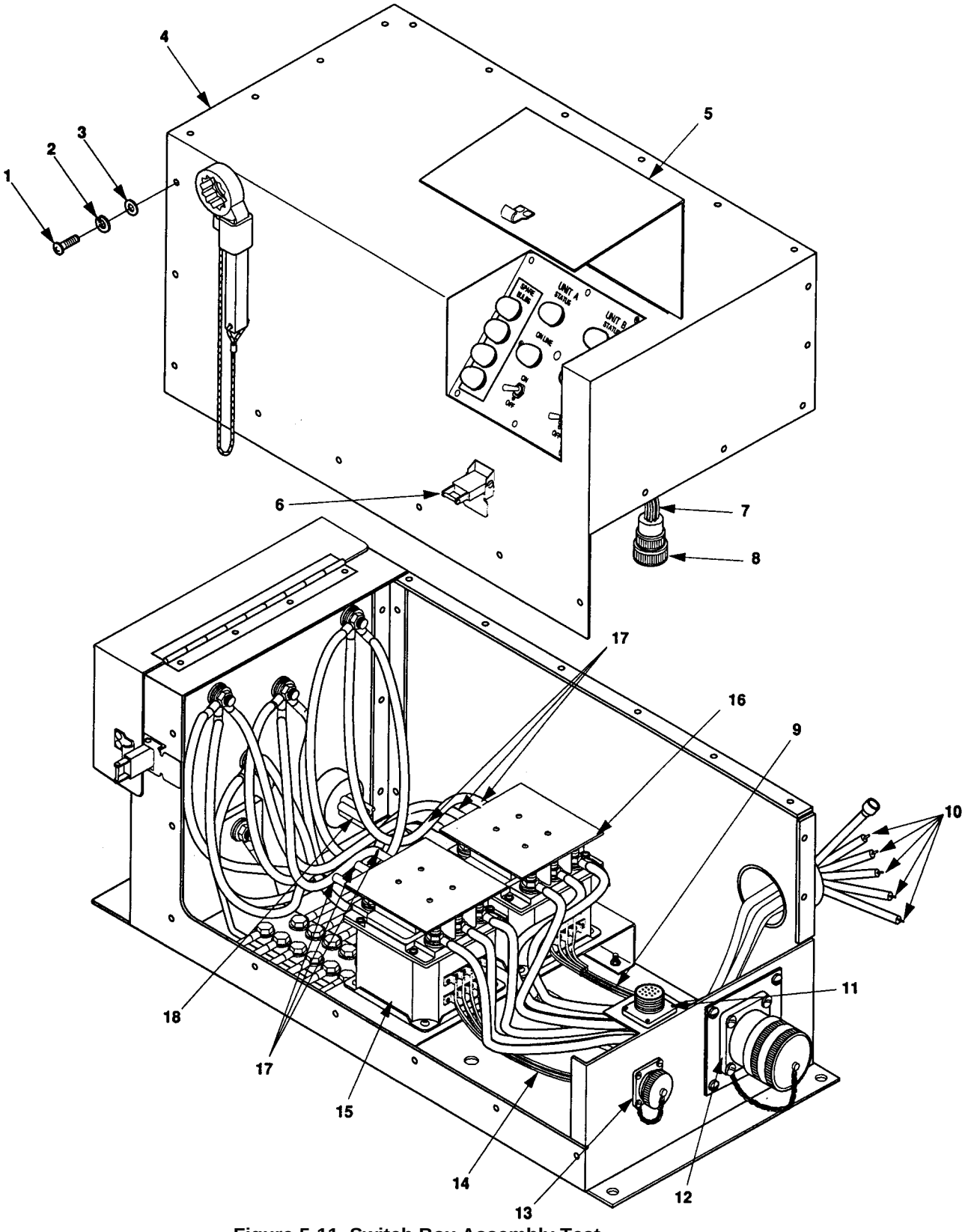

Figure 5-11. Switch Box Assembly Test.

3. Refer to power plant wiring diagram (figure FO-1)for identification of components inside stitch box assembly and check:

   a. Refer to table 5-1 and Check continuity of wiring harness W20 (7).

Table 5-1. Wiring Harness W20.

Wire Number	From	To
1	XDS1-1	P3-A
2	XDS1-2	P3-B
3	XDS3-2	P3-C
4	S1-3	P3-D
5	S1-5	P3-F
6	S1-6	P3-G
7	S2-6	P3-H
8	S2-5	P3-I
9	S2-3	P3-K
10	XDS4-2	P3-L
11	XDS2-1	P3-M
12	XDS2-2	P3-N
13	S1-3	XDS3-1
14	S2-3	XDS4-1

   b. Remove electrical connector cover, refer to table 5-2 and check continuity of wiring harness W9 (18).

NOTE

The bus bar is physically connected to LO of the switch box assembly and is a common ground. Wires connected to bus bar may be connected to any terminal on the bus bar.

Table 5-2. Wiring Harness W9.

Wire Number	From	To
1	J1-A	L1
2	J1-B	L2
3	J1-C	L3
4	J1-N	LO
5	J1-G1	BUS BAR
6	J1-G2	BUS BAR
7	J1-G3	BUS BAR
8	J1-G4	BUS BAR

c. Refer to table 5-3 and check continuity of wiring harness W10 (12).

Table 5-3. Wiring Harness W10.

Wire Number	From	To
1	J2-A	K2-A1
2	J2-B	K2-B1
3	J2-C	K2-Cl
4	J2-N	LO
5	J2-G1	BUS BAR
6	J2-G2	BUS BAR
7	J2-G3	BUS BAR
8	J2-G4	BUS BAR

d. Refer to table 5-4 and check continuity of wiring harness W17 (13).

Table 5-4. Wiring Harness W17.

Wire Number	From	To
1	J3-A	K2-12
2	J3-B	K2-Y
3	J3-E	BUS BAR

e. Refer to table 5-5 and check continuity of wiring harness W18 (9).

Table 5-5. Wiring Harness W18.

Wire Number	From	To
1	P1-A	K1-12
2	P1-B	K1-Y
3	P1-E	BUS BAR

NOTE

The cannon electrical plug connector for the W7 wiring harness is small. Ensure that multimeter leads are making good contact with the pins of the electrical plug connector.

f. Refer to table 5-6 and check continuity of wiring harness W7 (14).

Table 5-6. Wirina Harness W7.

Wire Number	From	To
1	K1-A1	J4-A
2	Switch Box Assembly LO	J4-B
3	K1-Y	J4-C
4	K1-X	J4-D
5	K1-11	J4-F
6	K1-12	J4-G
7	K2-12	J4-H
8	K2-11	J4-I
9	K2-X	J4-K
10	K2-Y	J4-L
11	K2-A1	J4-M
12	Switch Box Assembly LO	J4-N

g. Refer to table 5-7 and check continuity for each power lead, W-1 through W-5 (10).

Table 5-7. Input Power Leads.

Wire Identification	From	To
W-1	K1-A1	Unit A Generator Set L1
W-2	K1-B1	Unit A Generator Set L2
W-3	K1-C1	Unit A Generator Set L3
W-4	Switch Box Assembly LO	Unit A Generator Set L4
W-5	BUS BAR	Unit A Generator Set GND

h. Refer to table 5-8 and check continuity for each electrical lead, W-11 through W-16 (17).

Table 5-8. Output Power Leads.

Wire Identification	From	To
W-11	K1-A2	Switch Box Assembly L1
W-12	K1-B2	Switch Box Assembly L2
W-13	K1-C2	Switch Box Assembly L3
W-14	K2-A2	Switch Box Assembly L1
W-15	K2-B2	Switch Box Assembly L2
W-16	K2-C2	Switch Box Assembly L3

4. Test contactor as follows:

a. Using a multimeter, test contactor K1 (16) as follows:

(1) Refer to figure 5-12 and perform following continuity checks. If any multimeter indication is not correct, replace contactor (paragraph 5-12).

Lead Placement Contactor Terminals	Multimeter Indication
32 and 33	continuity
21 and 22	open circuit
11 and 12	open circuit
A1 and A2	open circuit
B1 and B2	open circuit
C1 and C2	open circuit
A1 and B1	open circuit
B1 and C1	open circuit
C1 and A1	open circuit

(2) Connect power supply VAC line to terminal X of contactor.

(3) Connect power supply AC Return line to terminal Y of contactor.

WARNING

Dangerous voltage exists on live circuits. Always observe precautions and never work alone. Failure to observe this warning can result in severe personal injury or death.

(4) Apply power to power supply.

(5) Listen for sound of contactor operation.

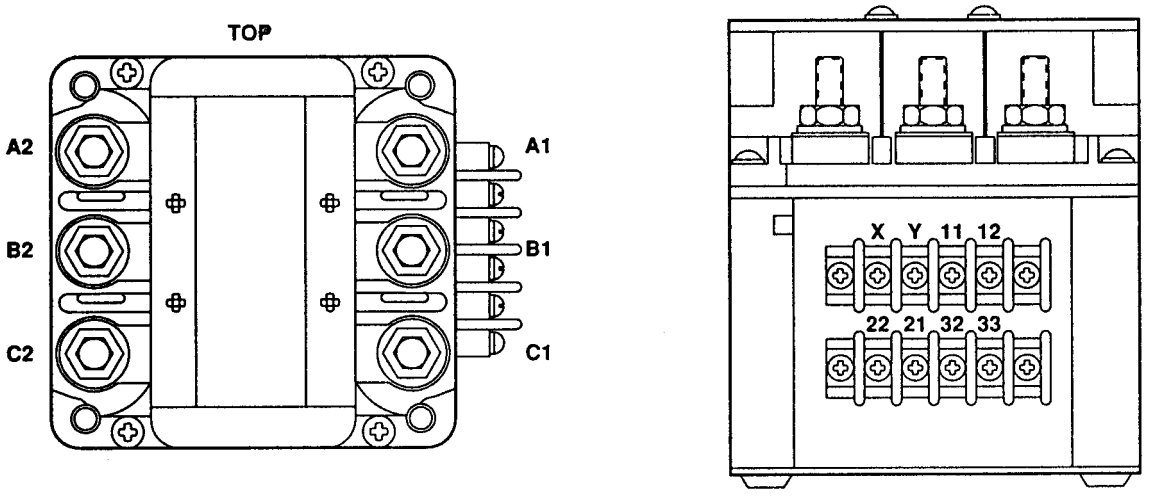

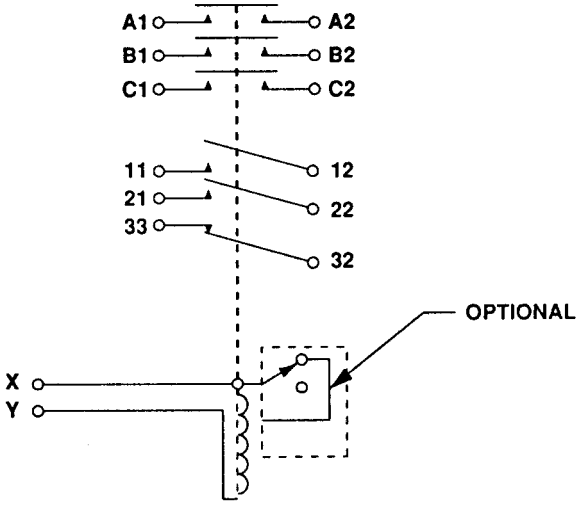

SCHEMATIC DIAGRAM

Figure 5-12. Contactor Test Points.

(6) Perform following continuity checks. If any multimeter indication is not correct, replace contactor (paragraph 5-12).

Lead Placement Contactor Terminals	Multimeter Indication
32 and 33	open circuit
21 and 22	continuity
11 and 12	continuity
A1 and A2	continuity
B1 and B2	continuity
C1 and C2	continuity
A1 and B1	open circuit
B1 and C1	open circuit
C1 and A1	open circuit

(7) Remove power from power supply and disconnect lines connected in steps a.(2) and a.(3).

b. Repeat steps a.(1) through (6) for contactor K2 (15, figure 5-11).

5. Reassemble switch box assembly as follows:

a. Refer to paragraphs 5-8 through 5-12 and repair or replace any defective parts.

b. Position the switch box cover (4, figure 5-11) in front of the switch box assembly.

c. Connect P3 (8) to J4 (11).

d. Position the switch box cover (4) over the switch box assembly and align the mounting holes.

e. Install lock washers (2), flat washers (3), and screws (4), that secure the switch box cover (4).

5-8 CONTROL PANEL ASSEMBLY MAINTENANCE.

This task covers: a. Removal
b. Repair
b. Installation

INITIAL SETUP

Tools

General Mechanic's Tool Kit (item 1, appendix B)

Materials/Parts

Washers, Lock

Equipment Conditions

Reference

Both generator sets shut down, para 2-5.3.1.
Trailer support devices are lowered, paragraph 2-3.2.1.

REMOVAL

1. Release clamping catch (6, figure 5-13) and open the control panel access cover (5).

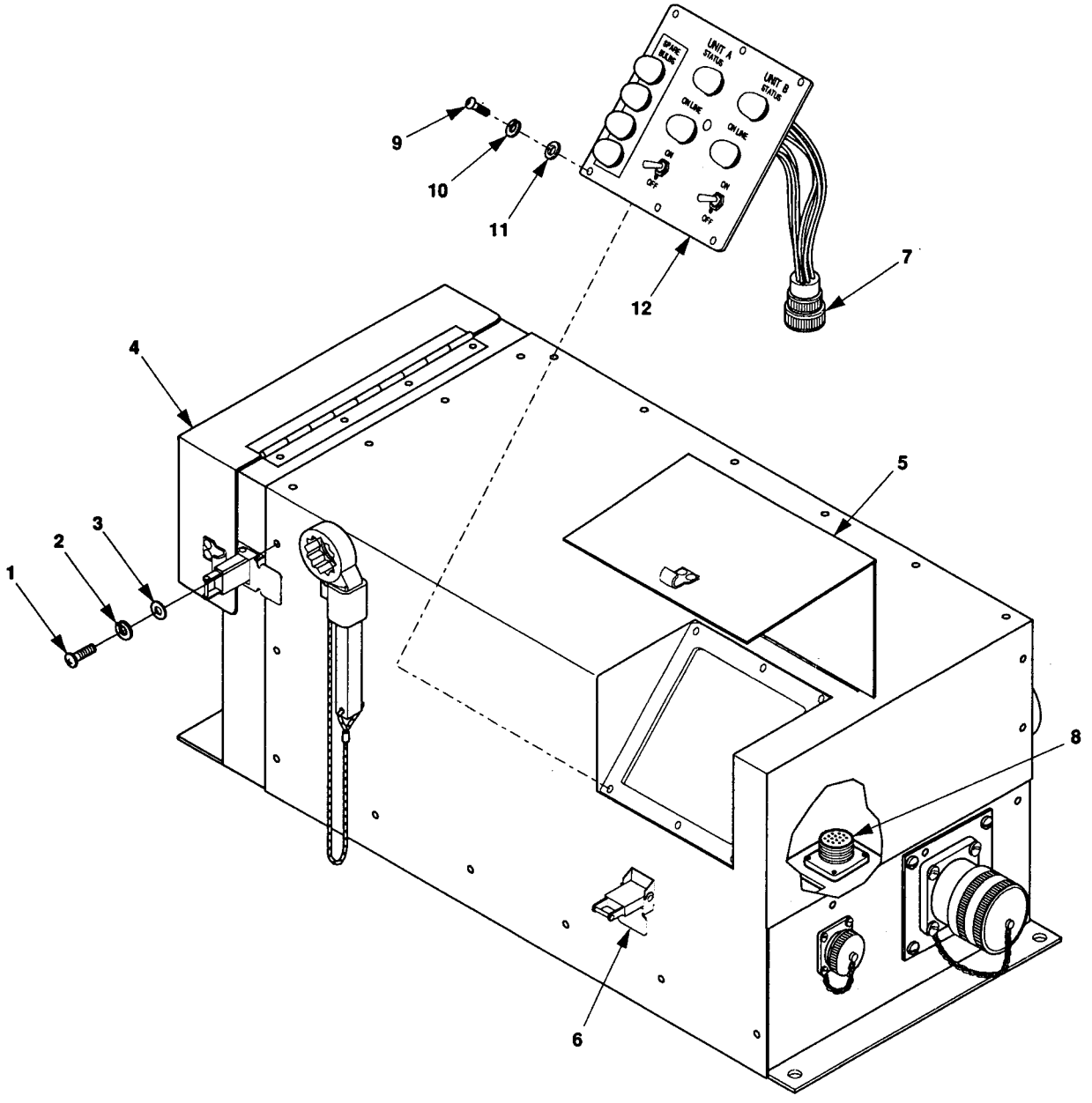

Figure 5-13. Control Panel, Wring Harnesses, and Wiring Leads Maintenance,

2. Remove 8 screws (9), flat washers (11), and lock washers (10) that secure control panel assembly (12). Discard lock washers.

3. Disconnect P3 (7) from J4 (8).

4. Remove the control panel assembly (12).

REPAIR

NOTE

Spare lamps must be tied to ground for electromagnetic interference (EMI) protection.

Refer to appendix G and repair or manufacture wiring harness W20.

INSTALLATION

1. Connect P3 (7) to J4 (8).

2. Position new control panel assembly on mounting plate and align mounting holes.

3. Install new lock washers (10), flat washers (11), and screws (9) that secure control panel assembly (12) to switch box assembly (4).

4. Close the control panel access cover (5) and secure with clamping catch (6).

5-9 WIRING HARNESS MAINTENANCE

This task covers: a. Removal
b. Repair
c. Installation
d. Inspection

INITIAL SETUP

Tools

General Mechanic's Tool Kit (item 1, appendix B)

Materials/Parts

Washers, Lock

Equipment Conditions

Reference

Both generator sets shut down, para 2-5.3.1.

REMOVAL

1. Remove 21 machine screws (1, figure 5-13), lock washers (2), and flat washers (3) that secure the switch box access cover (4) to the switch box assembly. Discard lock washers.

CAUTION

The control panel connector P3 is connected to connector J4. Movement of the switch box cover is limited. To prevent damage to control panel wiring harness, use caution removing switch box cover. Failure to observe this caution can result in equipment damage.

2. Carefully position switch box cover (4) in front of switch box assembly.

3. Disconnect P3 (7) from J4 (8) and set switch box cover (4) out of the way.

4. Refer to figure FO-1, then label all leads and plugs at each end of the wiring harness to be replaced.

5. Disconnect all leads and plugs.

6. Remove wiring harness.

INSPECTION

Visually inspect wiring harness for damaged or frayed wires, and loose, broken, or corroded connections.

REPAIR

Refer to appendix G and repair or manufacture wiring harness.

INSTALLATION

1. Position the new wiring harness in place.

2. Connect the leads and plugs as indicated on the wiring diagram (FO-1).

3. Connect P3 (7) to J4 (8) and position the switch box cover (4) over the switch box assembly.

4. Install new lock washers (2), flat washer (3), on each machine screw (1) and secure switch box cover (4).

5-10 ELECTRICAL LEADS MAINTENANCE.

This task covers: a. Removal
b. Inspection
c. Repair
d. Installation

INITIAL SETUP

Tools

General Mechanic's Tool Kit (item 1, appendix B)

Materials/Parts

Washers, Lock

Equipment Conditions

Reference

Both generator sets shut down, para 2-5.3.1.

REMOVAL

1. Remove 21 machine screws (1, figure 5-13), flat washers (3), and lock washers (2) that secure the switch box cover (4) to the switch box assembly.

CAUTION

The control panel comector P3 is connected to connector J4. Movement of the switch box cover is limited. To prevent damage to control panel wiring harness, use caution removing switch box cover. Failure to observe this caution can result in equipment damage.

2. Carefully slide switch box cover (4) off switch box and set in front of switch box assembly.

3. Disconnect P3 (7) from J4 (8) and set switch box cover (4) out of the way.

4. Refer to FO-1, then label each end of lead to be replaced.

5. Disconnect and remove lead.

INSPECTION

Visually inspect lead for loose, broken, or corroded connections.

REPAIR

Refer to appendix G and repair or manufacture lead.

INSTALLATION

1. Position new lead in place.

2. Connect lead asindicated onwiring diagram (FO-1).

3. Connect P3 (7) to J4 (8) and position the switch box cover (4) over the switch box assembly.

4. Install new lock washers (2), flat washers (3) and screws (1) that secure switch box cover (4).

5-11 BUS BAR MAINTENANCE.

This task covers: a. Inspection
b. Removal
c. Repair
d. Installation

INITIAL SETUP

Tools

General Mechanic's Tool Kit
(item 1, appendix B)
Helicoil Insertion Tool (item 7, appendix B)

Materials/Parts

Washers, Lock
Insert, Screw Threaded

Equipment Conditions

Reference

Both generator sets shut down, para 2-5.3.1.

INSPECTION

Visually inspect for corrosion, damage, or for loose or missing hardware.

REMOVAL

1. Remove 21 machine screws (1, figure 5-13), flat washers (3), and lock washers (2) that secure the switch box cover (4) to the switch box assembly.

CAUTION

The control panel connector P3 is connected to connector J4. Movement of the switch box cover is limited. To prevent damage to control panel wiring harness, use caution removing switch box cover. Failure to observe this caution can result in equipment damage.

2. Carefully position switch box cover (4) in front of switch box.

3. Disconnect P3 (7) from J4 (8) and set switch box cover (4) out of the way.

4. Remove switch box cover (4).

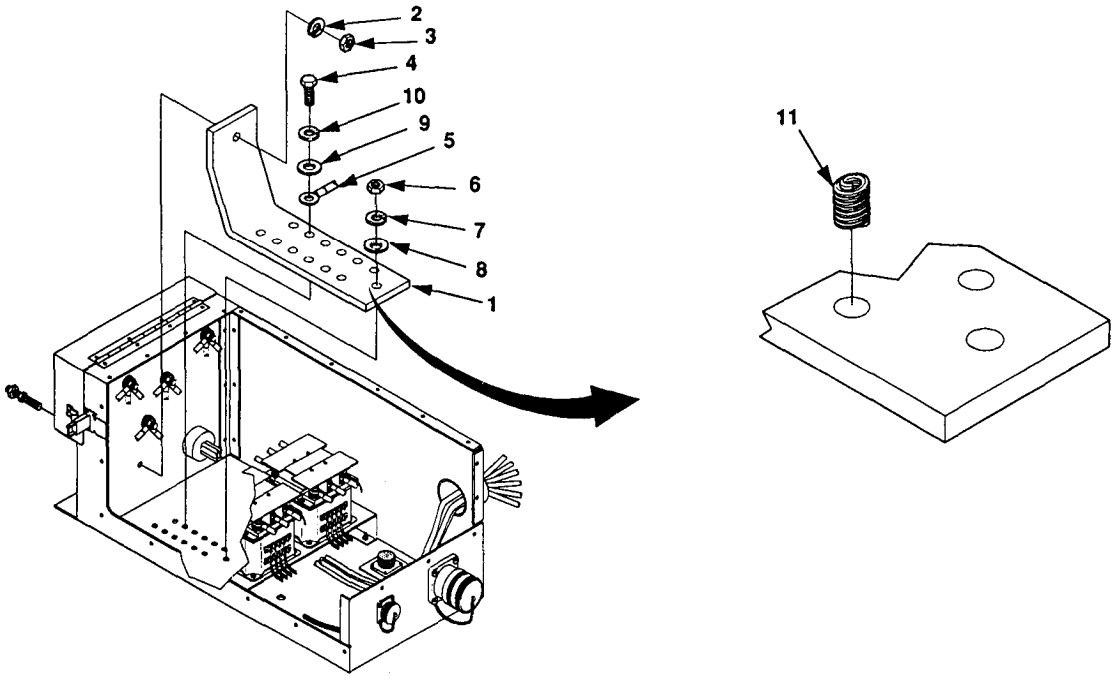

Figure 5-14. Bus Bar Maintenance

NOTE

The bus bar is physically connected to LO of the switch box assembly and is a common ground. Leads connected to bus bar may be connected to any terminal on the bus bar.

5. Remove cap screws (4, figure 5-14), lock washers (10), flat washers (9) and electrical leads (5) from bus bar (1).

6. Remove nut (3) and lock washer (2).

7. Remove nut (6), lock washer (7), and flat washer (8) and bus bar (1).

REPAIR

1. Disconnect and label electrical leads (5) connected to bus bar.

2. Remove defective insert (11).

3. Using insertion tool, rotate handle CCW until you can install insert (11) into barrel with tang toward hole.

4. Turn handle CW until one thread of insert protrudes from hole.

5. Position over bus bar and turn handle CW until insert is installed.

6. Turn handle CCW to remove insertion tool.

7. Install small punch into hole until it contacts tang. Break off and remove tang.

INSTALLATION

1. Position bus bar (1, figure 5-14) in place.

2. Install flatwashers (8), newlock washers (7) and nut (6).

3. Install lock washers (2) and nut (3).

4. Install leads (5), flat washers (9), lock washers (10) and cap screws (4).

5. Connect P3 (7) to J4 (8, figure 5-13) and position the switch box cover (4) over the switch box assembly.

6. Install flat washers (3), lock washers (2), and screws (1) that secure the switch box cover (4).

5-12 CONTACTOR MAINTENANCE.

This task covers: a. Removal b. Installation

INITIAL SETUP

Tools

General Mechanic's Tool Kit (item 1, appendix B)

Materials/Parts

Washer, Lock

Equipment Conditions

Reference

Both generator sets shut down, para 2-5.3.1.

REMOVAL

1. Remove 21 screws (1, figure 5-15), lock washers (2), flat washers (3) that secure the switch box cover (4) to the switch box assembly. Discard lock washers.

CAUTION

The control panel connector P3 is connected to connector J4. Movement of the switch box cover is limited. To prevent damage to control panel wiring harness, use caution removing switch box cover. Failure to observe this caution can result in equipment damage.

2. Carefully position switch box cover (4) in front of the switch box assembly.

3. Disconnect P3 (5) from J4 (6) and set switch box cover (4) out of the way.

4. Remove and retain the switch box cover (4).

5. Remove four screws (7, figure 5-15) and one terminal shield (8) from the contactor (9).

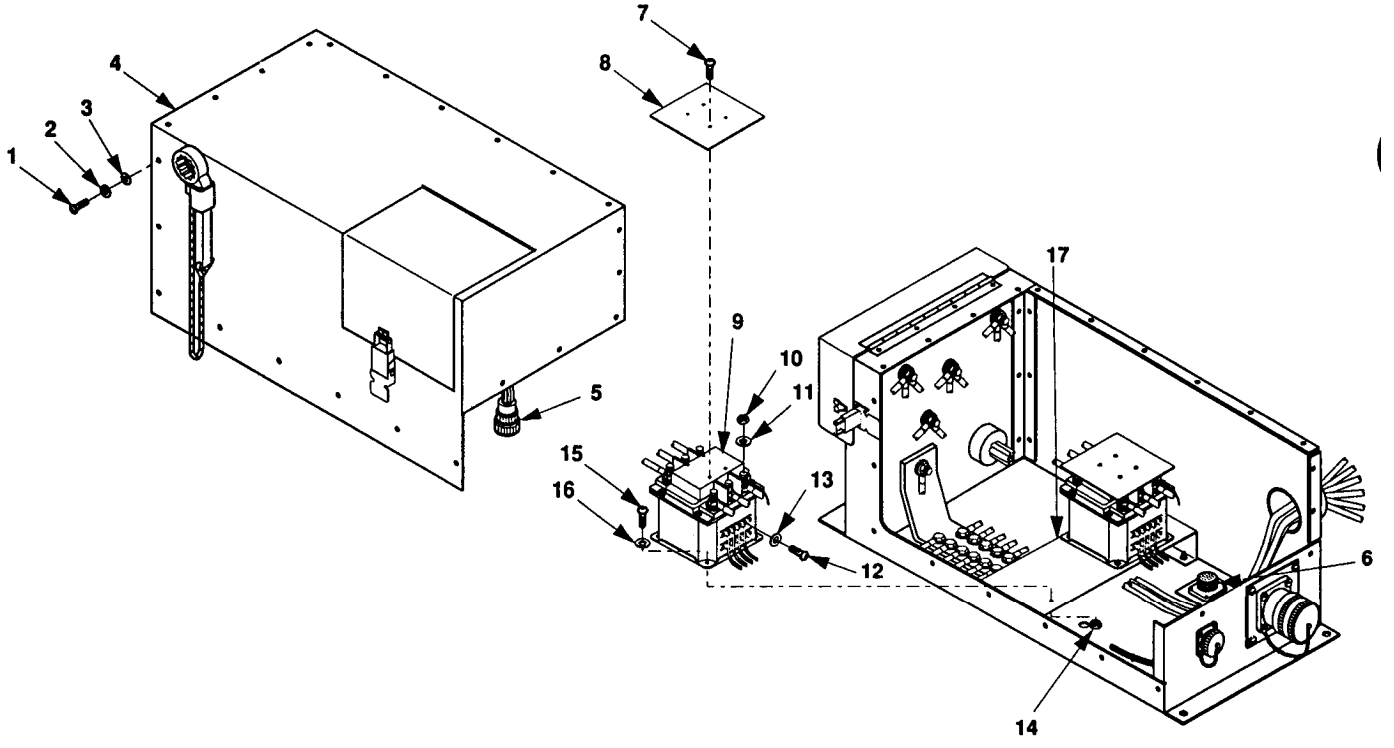

Figure 5-15. Contactor Maintenance.

6. Remove six nuts (10) and washers (11). Tag and remove six leads from contactor (9).

7. Remove eight terminal screws (12) and washers (13). Tag and remove wiring harnesses from contactor (9).

8. Remove four nuts (14), screws (15), flat washers (16), and contactor (9).

INSTALLATION

1. Position new contactor (9) over mounting holes in bracket (17).

2. Install a flat washer (16) on each screw (15).

3. Install four screws (15), flat washers (16), and nuts (14) to secure contactor (9).

4. Remove four screws (7) and terminal shield (8) from the new contactor (9).

5. Connect the wiring harness and six electrical leads and install washers (13 and 11), screws (12), and nuts (10).

6. Install terminal shield (8) on new contactor (9) and secure with screws (7).

7. Connect P3 (5) to J4 (6) and position switch box cover (4) over the switch box assembly.

8. Install flat washers (3), lock washers (2) and screws (1) that secure switch box cover (4).

5-13 2 1/2 TON TRAILER FUEL DRAIN ASSEMBLY Maintenance.

This task covers: a. Removal
b. Repair
c. Installation

INITIAL SETUP

Tools

General Mechanic's Tool Kit
(item 1, appendix B)

Equipment Conditions

Reference

Generator Set removed, paragraph 5-6.
Trailer support devices are
lowered, paragraph 2-3.2.1.

REMOVAL

1. Close drain cock valve (9, figure 5-16) and remove cap (2) from the fuel drain assembly.
2. Place container beneath fuel drain assembly.
3. Disconnect hose fittings (3) from drain cock valve (4).
4. Remove hose assembly (1).
5. Remove drain cock valve (4), retaining nut (6) and flat washer (5) from the tube nipple (7).
6. Remove tube nipple (7).

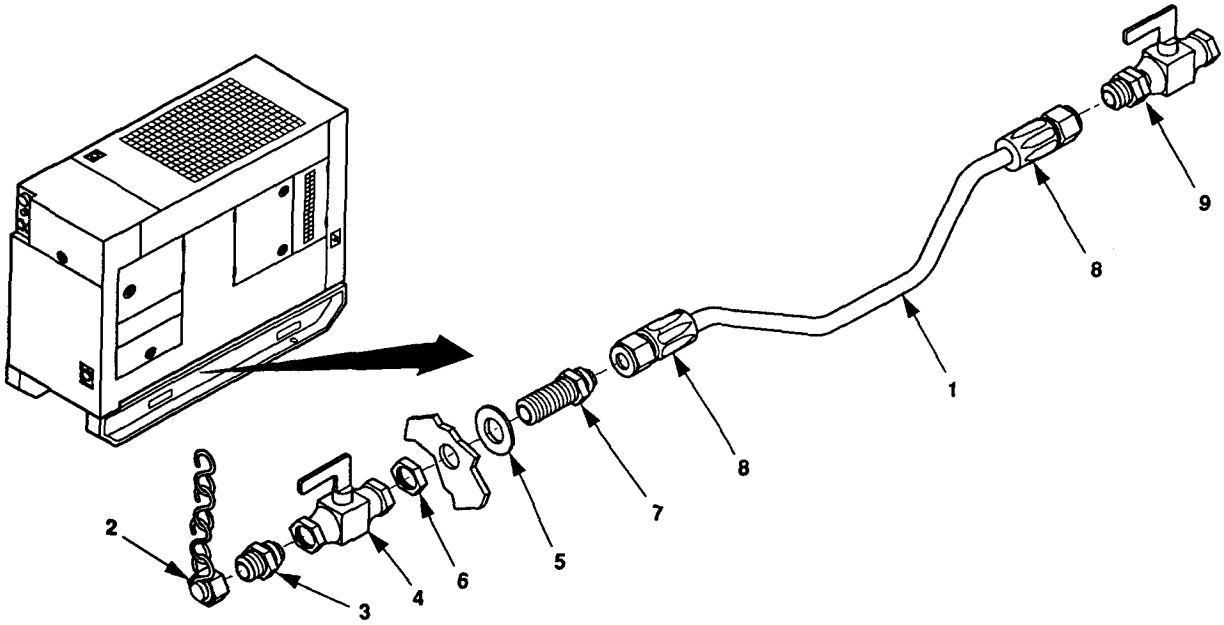

Figure 5-16. Fuel Drain Assembly Replacement.

REPAIR

Refer to appendix G and replace fuel drain assembly.

INSTALLATION

1. Position tube nipple (7) on the equipment.
2. Install the flat washer (5), retaining nut (6) and drain cock valve (4) then tighten.
3. Install drain cock valve (4) on tube nipple (7).
4. Install hose assembly (1) and tighten hose fittings (8).
5. Install hose fitting (3) and tube cap (2) on drain cock valve (4).
6. Close drain cock valve (4) and open valve (9).

5-14 1 TON TRAILER GENERATOR MOUNTING RAIL MAINTENANCE.

This task covers: a. Removal b. Installation

INITIAL SETUP

Tools

General Mechanic's Tool Kit (item 1, appendix B)

Materials/Parts

Nuts, Self-Locking

Equipment Conditions

Reference

Trailer handbrakes set, front support leg/landing leg lowered, and rear leveling-support jack lowered; paragraph 2-3.2.1.

Generator set removed, paragraph 5-6.
Accessory box removed, paragraph 4-19.
Front platform removed, paragraph 4-25.

REMOVAL

1. Remove ten self-locking nuts (5, Figure 5-17), twenty flat washers (3 and 4), and ten cap screws (2) from each generator mounting rail (1).
2. Lift generator mounting rails (1) off trailer frame (6). Save generator mounting rails (1).
3. Remove two locknuts (7), four flat washers (8), two bolts (9), and bracket (10).

INSTALLATION

1. Install bracket (10, figure 5-17), using two bolts (10), four flat washers (9), and two locknuts (7).

2. Place generator mounting rails (1) on trailer frame (6). Align mounting holes in generator mounting rails (1) with mounting holes in trailer frame (6).

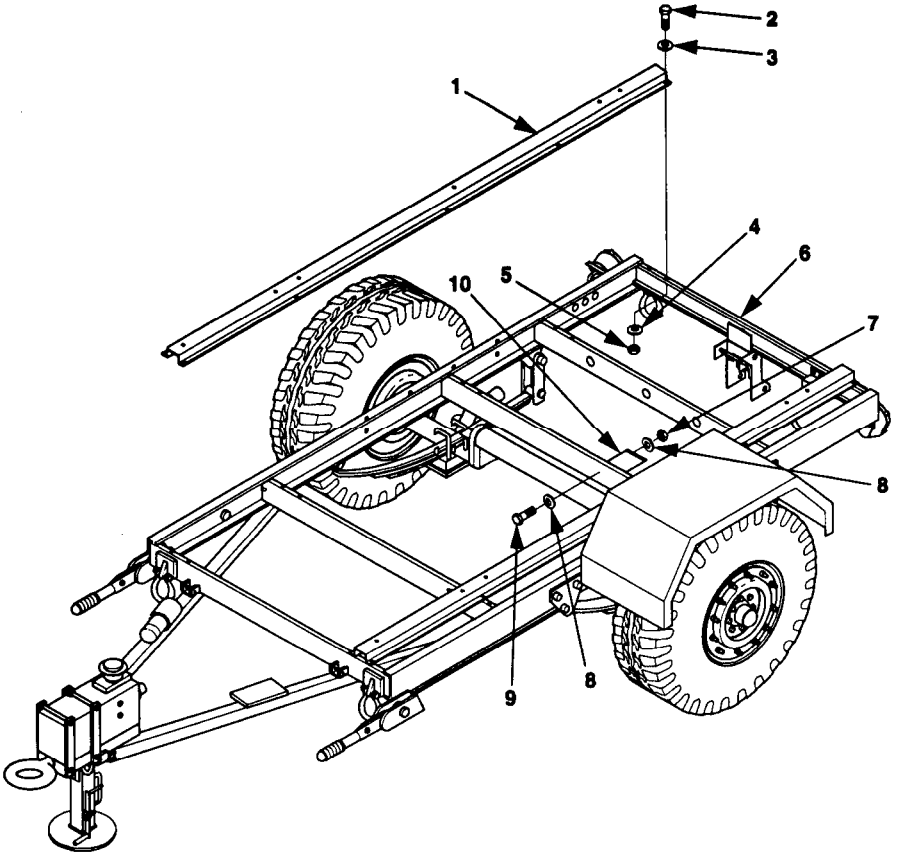

Figure 5-17. Generator Mounting Rails on 1 Ton Trailer.

3. Place a flat washer (3) on each often cap screws (2). Insert cap screws (2) through mounting holes in generator mounting rails (1) and trailer frame (6).

4. Install a flat washer (4) and a new self-locking nut (5) on each of ten cap screws.

5-15 TRAILER MODIFICATIONS REPAIR (PU-800, PU-801, PU-802, AND AN/MJQ-39 ONLY).

Repair of the rear steps, fender, front steps and front platform is limited to bending, straightening, and welding. Refer to TM 9-237 for repair procedures.

6-16 PU-601A GENERATOR MOUNTING RAIL MAINTENANCE.

This task covers: a. Removal b. Repair c. Installation

INITIAL SETUP

Tools

Tool Kit, General Mechanic's (item 1, appendix B)
Rivet Gun (item 8, appendix B)

Materials/Parts

Rivets (items 8, 9, and 10, appendix I)

Equipment Conditions

Reference

Trailer handbrakes set, front support leg/landing leg lowered, and rear leveling-support jacks lowered; paragraph 2-3.2.1. Accessory box removed; paragraph 4-19. Generator set removed; paragraph 5-6. Center floor removed; paragraph 5-16.1.

REMOVAL

Remove rivets (1 and 2, figure 5-18) and mounting rail (3) from trailer chassis (4).

REPAIR

Repair of generator mounting rails consists of replacing rivets (5) and doubler plates (6 and 7), and rivets (8) and angle supports (9 and 10).

INSTALLATION

Place mounting rail (3) on trailer chassis (4) and secure with rivets (1 and 2).

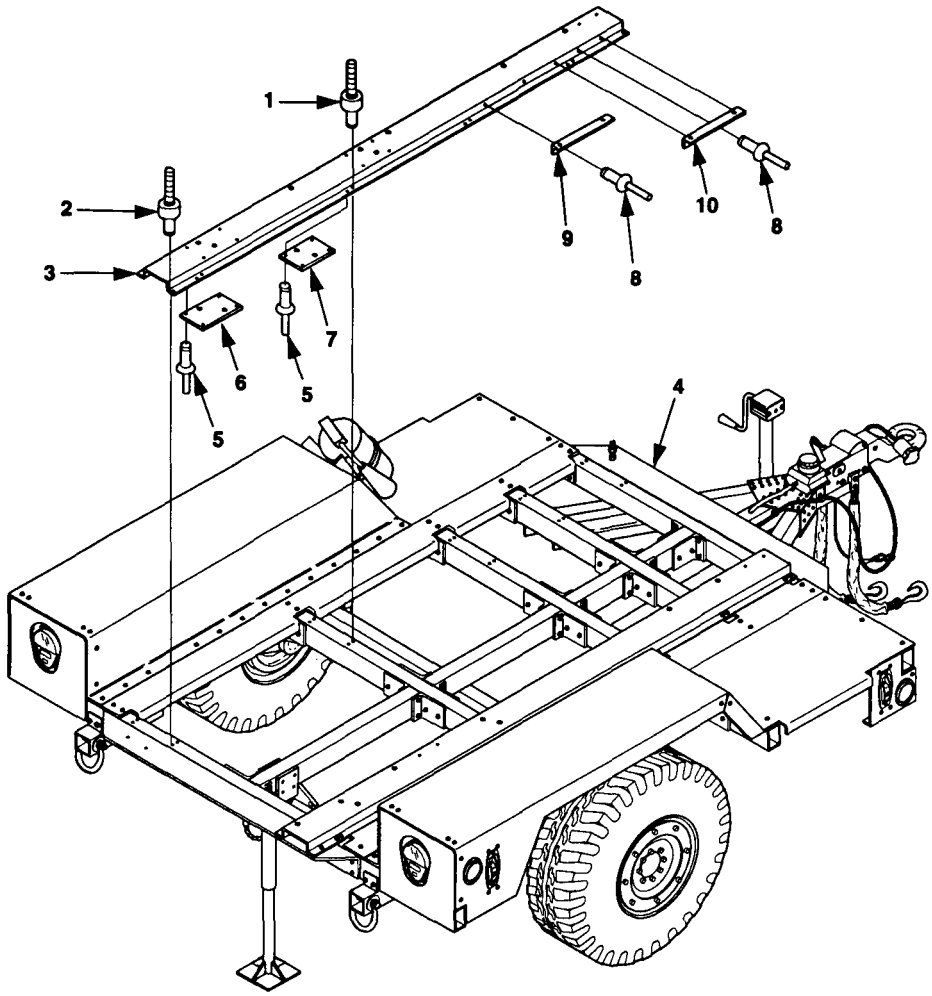

Figure 5-18. PU-801A Generator Mounting Rail Replacement.

5-17 PU-801A FLOOR AND FENDER MAINTENANCE.

This task covers: a. Removal
b. Repair
c. Installation

INITIAL SETUP

Tools

Tool Kit, General Mechanic's (item 1, appendix B)
Rivet Gun (item 8, appendix B)

Materials/Parts

Rivets, (items 6 and 7, appendix I)

Equipment Conditions

Reference

Generator set shut down; paragraph 2-5.3.3.

Trailer handbrakes set, front support leg/landing lowered, and rear leveling-support jacks lowered; paragraph 2-3.2.1.

Generator sets removed; paragraph 5-6.

REMOVAL

1. Floors.

NOTE

PU-801A trailer has center and side floors or platforms riveted to the trailer. The side floors are in two sections.

Remove rivets (1, figure 5-19) and floor sections (2) from trailer chassis (3)

2. Fenders.

a. If necessary, remove the following.

(1) Data plate (paragraph 4-22).

(2) Fire extinguisher and bracket (paragraph 4-20).

(3) Side marker light and reflector (TM 9-2330-392-14&P).

c. Remove rivets (1, figure 5-20) and fender (2) from trailer chassis (3).

REPAIR

1. Floors.

Repair of floors consists of welding, straightening, and spot painting as required.

2 Fenders.

Repair offenders consists of welding, straightening, and spot painting as required, and replacement of rivets (4), fender angle support (5), and tail light bracket (6).

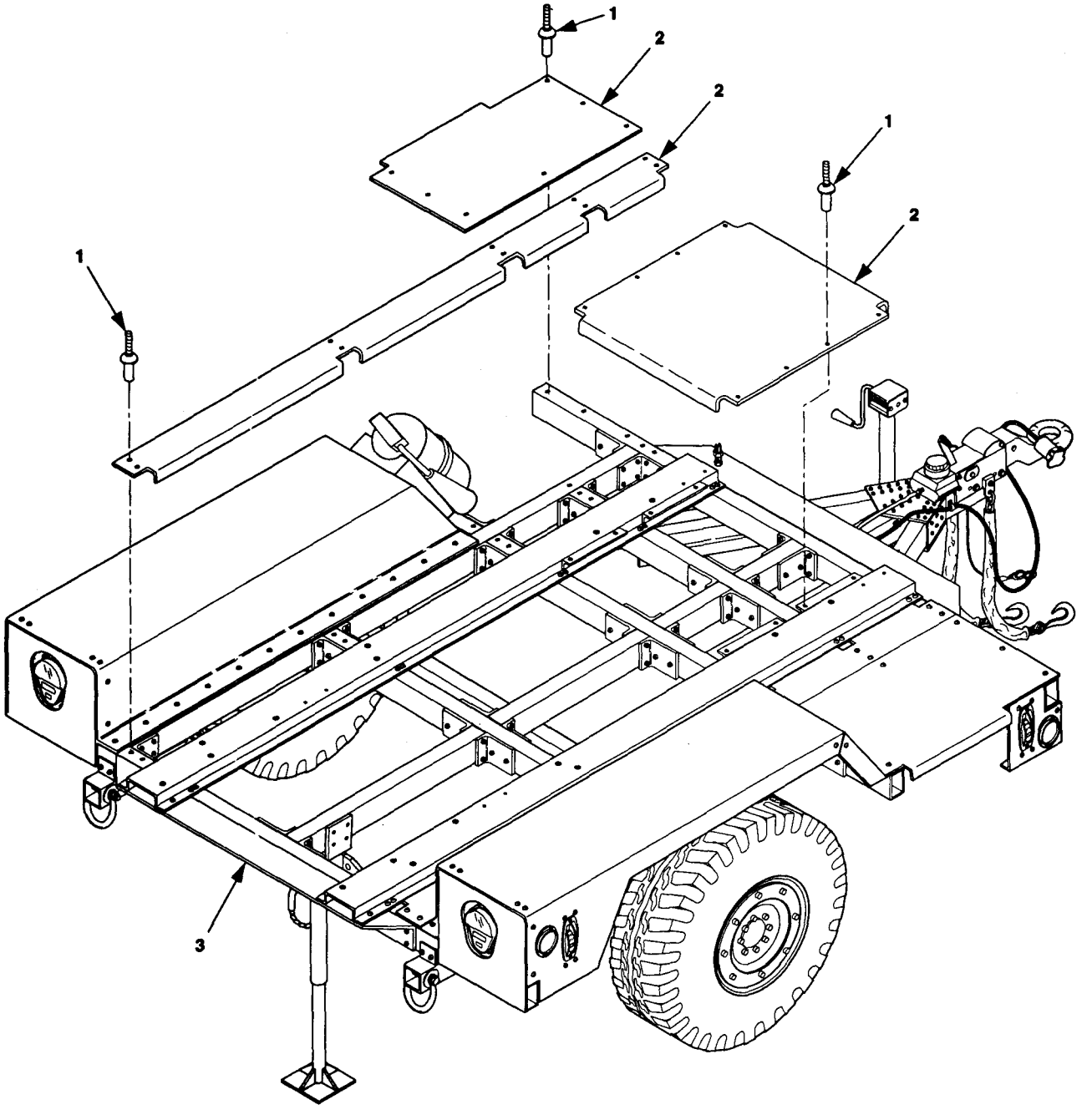

Figure 5-19. PU-801A Floor Replacement.

INSTALLATION

1. **Floors.**

Place floor section (2, figure 5-19) on trailer chassis (3) and secure with rivets (1)

Fenders.

a. Place fender (2, figure 5-20) on trailer chassis (3) and secure with rivets (1).

b. If removed, install the following.

(1) Data plate (paragraph 4-22).

(2) Fire extinguisher and bracket (paragraph 4-20)

(3) Side marker light (TM 9-2330-392-14&P).

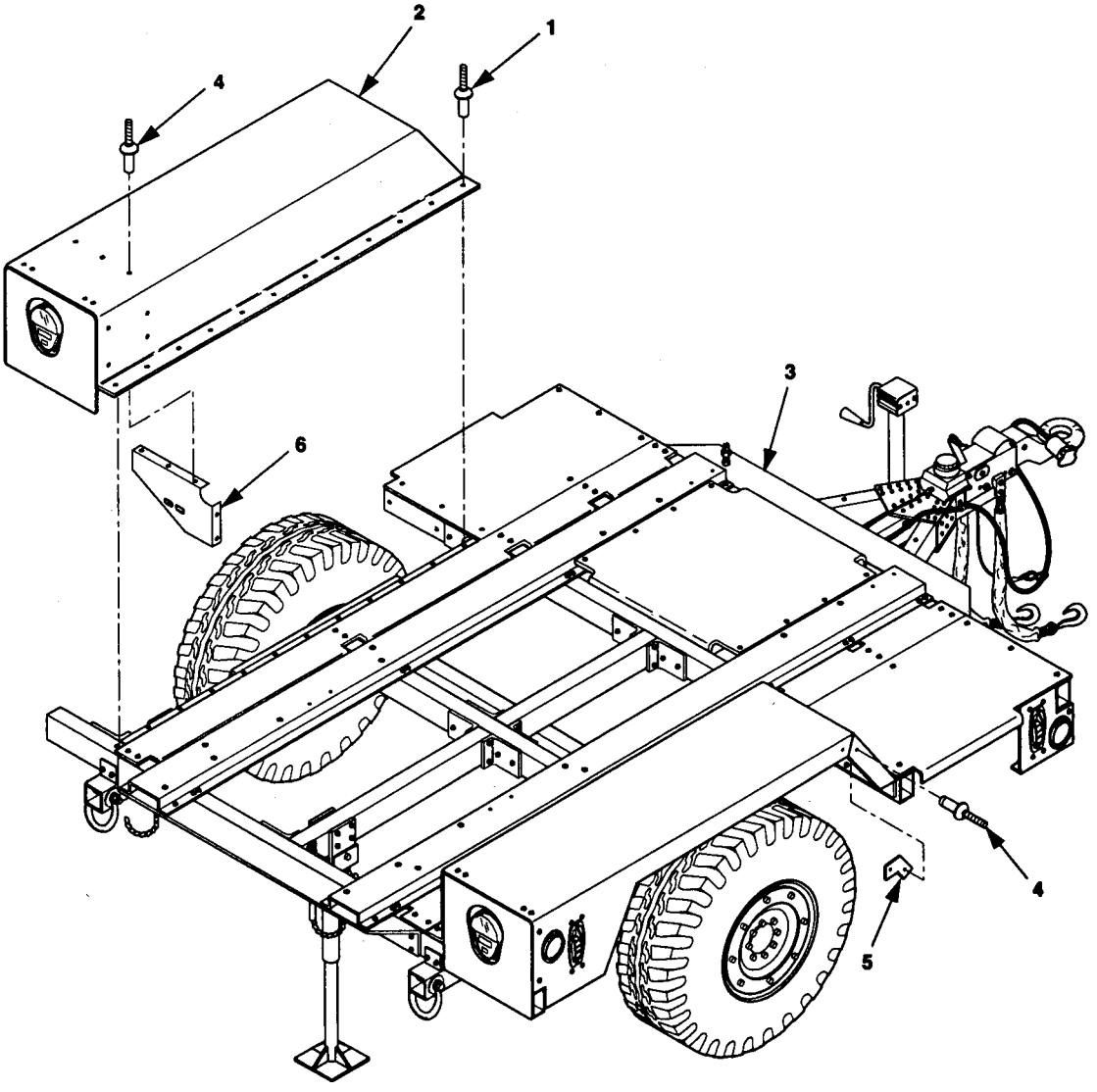

Figure 5-20. PU-801A Fender Replacement.

5-18 HIGH MOBILITY TRAILER REAR LEVELING-SUPPORT JACK Maintenance.

This task covers: a. Removal
b. Repair
c. Installation

INITIAL SETUP

Tools

Tool Kit, General Mechanic's (item 1, appendix B)
Jack Stand (item 2, appendix B)

Materials/Parts

Pin, Cotter
Pin, Spring
Fitting, Lubrication (if needed)
Grease, GAA (item 2, Appendix E)
Rivets (item 11, appendix 1)

Equipment Conditions

Reference

Trailer handbrakes set and front support leg/landing leg lowered; paragraph 2-3.2.1.
Both generator sets shut down; paragraph 2-5.3.3

REMOVAL

WARNING

Before removing trailer leveling-support jack, support rear of trailer with jack stands. Failure to observe this warning can cause severe personal injury or death.

L Support rear of trailer with jack stands.

2. Turn leg base (1, figure 5-21) to take weight off leg prop.

3. Remove either one of two cotter pins (2 or 3) from pivot shaft (4) and discard cotter pin.

4. Hold leg base (1) steady and remove pivot shaft (4) with remaining cotter pin in place.

5. Lift leg base (1) slightly to take weight off retaining pin (5) and remove retaining pin. Move leg base (1) and attached parta out of bracket (7).

6. Remove three rivets (6) and bracket (7) from trailer chassis (8).

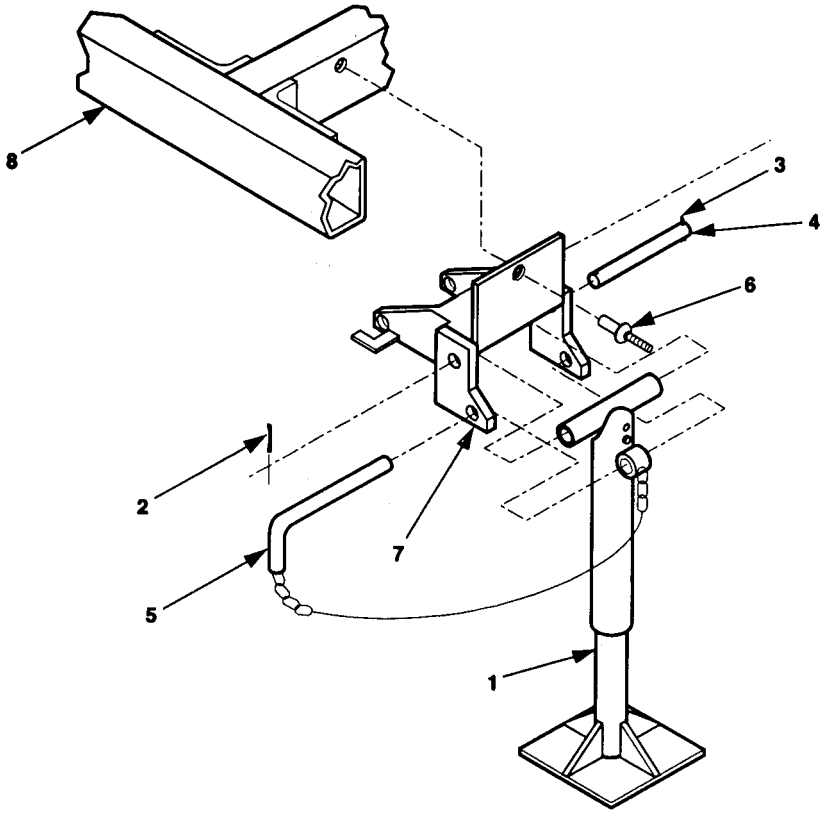

Figure 5-21. Rear Leveling-Support Jack Replacement; High Mobility Trailer.

REPAIR

Refer to paragraph 4-27.

INSTALLATION

1. Install bracket (7) on trailer chassis (8), with three rivets (6).
2. Position leg base (1) and attached parts in bracket (7) and install retaining pin (5).
3. Position leg base (1) and install pivot shaft (4).
4. Install new cotter pin (2 or 3) in pivot shaft (4).
5. Lube rear leveling-support jack.

APPENDIX A

REFERENCES

A-1 SCOPE.

This appendix lists all forms, regulations, pamphlets, specifications, standards, technical manuals, lubrication orders, and field manuals referenced in this manual.

A-2 FORMS.

Recommended Changes to Publications and Blank Forms	DA Form 2028
Recommended Changes to Equipment Technical Publications	DA Form 2028-2
Depreservation Guide for Vehicles and Equipment	DA Form 2258
Equipment Inspection and Maintenance Worksheet	DA Form 2404
Packaging Improvement Report	DD Form 6
Product Quality Deficiency Report..	SF 368

A-3 ARMY REGULATIONS.

Dictionary of United States Army Terms	AR 310-25

A-4 DEPARTMENT OF THE ARMY PAMPHLETS.

The Army Maintenance Management System (TAMMS)	DA PAM 738-750

A-5 MILITARY SPECIFICATIONS.

Preservation, Methods of	MIL-P-116
Barner Materials, Transparent, Flexible, Heat Sealable	MIL-B-22191
Generator Sets, Mobile Electric Power; Packaging of	MIL-G-28554

A-6 FEDERAL SPECIFICATIONS.

Plywood, Flat Panel	NN-P-530
Paperboard, Wrapping and Cushioning	PPP-P-291
Boxes, Wood, Cleated Plywood	PPP-B-601
Tape, Packaging, Paper (for Carton Sealing)	PPP-T-76
Strapping, Steel, and Seals	QQ-S-781

A-7 MILITARY STANDARDS.

Abbreviations for Use on Drawings, and in Specifications, Standards and Technical Documents MIL-STD-12

Marking for Shipment and Storage MIL-STD-129

Standard Requirements for Soldered Electrical and Electronic Assemblies.. . . . . MIL-STD-2000

A-8 TECHNICAL MANUALS.

Operator's, Organizational, Direct Support and General Support Maintenance Manual (Including Repair Parts and Special Tools List),
Trailer: Cargo One Ton, 2-Wheel,
M101 (NSN 2330-00-738-9509)
M101A1 (NSN 2330-00-898-6779)
M101A2 (NSN 2330-01-101-4697)
Chassis: Trailer One Ton, 2-Wheel,
M116 (NSN 2330-00-542-5987)
M116A1 (NSN 2330-00-898-6780)
M116A2 (NSN 2330-01-101-8434) . . . . . TM 9-2330-202-14&P

Operator's, Organizational, Direct Support and General Support Maintenance Manual (Including Repair Parts and Special Tools List), Chassis, Trailer: Generator, 2 1/2 Ton, 2-Wheel,
M200A1 (NSN 2330-00-331-2307) . . . . . TM 9-2330-205-14&P

Operator's, Organizational, Direct Support and General Support Maintenance Manual (Including Repair Parts and Special Tools List),
Trailer, Cargo: 2000 Pounds, 2-wheel, M1101 (NSN 2330-01-387-5443)
Trailer, Cargo: 2800 Pounds, 2-wheel, M1102 (NSN 2330-01-387-5426)
Trailer, Chassis: 3072 Pounds, 2-wheel, (NSN 2330-01-387-5424) . . . . . TM 9-2330-392-14&P

Organizational, Direct Support, and General Support Maintenance. Care, Maintenance and Repair of Pneumatic Tires and Inner Tubes . . . . . TM 9-2610-200-24

Unit, Direct Support and General Support Maintenance Instructions, Diesel Engine Model No.: 4239T 4 Cylinder 3.9 Liter . . . . . TM 9-2815-254-24

Operator's Manual, Generator Set, Skid Mounted, Tactical, Quiet, 15 kW, 60/60 and 400 Hz
MEP-804A (50/60 Hz) 6115-01-274-7388
MEP-814A (400 Hz) 6115-01-274-7393 . . . . . TM 9-6115-643-10

Unit, Direct Support and General Support Maintenance Manual, Generator Set, Skid Mounted, Tactical, Quiet, 15 kW, 50/60 and 400 Hz
MEP-804 (50/60 Hz) 6115-01-274-7388
MEP-814 (400 Hz) 6115-01-274-7393 . . . . . TM 9-6115-643-24

Repair Parts and Special Tools List: Generator Set, Tactical Quiet, 15 kW 50/60 and 400 Hz . . . . . TM 9-6115-643-24P

Procedures for Destruction of Equipment to Prevent Enemy Use
(Mobility Equipment Command) . . . . TM 750-244-3

Operator Welding Theory and Application . . . . . TM 9-237

Repair Parts and Special Tools List: Diesel Engine
Model No.: 4239T 4 Cylinder 3.9 Litar . . . . . TM 9-2815-254-24P

A-9 LUBRICATION ORDERS.

Lubrication Order: Generator Set, Skid Mounted, Tactical, Quiet,
15 kW, 50/60 and 400 Hz
MEP-804 (50/60 Hz) 6115-01-274-7388
MEP-814 (400 Hz) 6115-01-274-7393 . . . . . LO 9-6115-643-12

A-10 FIELD MANUALS.

Electrical Power Generation in the Field . . . . . FM 20-31

A-12 TECHNICAL BULLETINS.

Tactical Wheeled Vehicles: Repair of Frames . . . . . TB 9-2330-247-40

APPENDIX B

MAINTENANCE ALLOCATION CHART

Section I. INTRODUCTION

B-1 General.

B-1.1 This section provides a general explanation of all maintenance and repair functions authorized at various maintenance levels.

B-1.2 The Maintenance Allocation Chart (MAC) in section II designates overall authority and responsibility for the performance of maintenance functions on the identified end item or component. The application of the maintenance functions to the end item or component will be consistent with the capacities and capabilities of the designated maintenance levels.

B-1.3 Section III lists the tools and test equipment (both special tools and common tool sets) required for each maintenance function as referenced from section II.

B-1.4 Section IV contains supplemental instructions and explanatory notes for a particular maintenance function.

B-2 MAINTENANCE FUNCTIONS.

Maintenance functions will be limited to and defined as follows:

B-2.1 Inspect. To determine the serviceability of an item by comparing its physical, mechanical, and/or electrical characteristics with established standards through examination (e.g., by sight, sound, or feel).

B-2.2 Test. To verify serviceability by measuring the mechanical, pneumatic, hydraulic, or electrical characteristics of an item and comparing those characteristics with prescribed standards.

B-2.3 Service. Operations required periodically to keep an item in proper operating condition, i.e., to clean (includes decontaminate, when required), to preserve, to drain, to paint, or to replenish fuel, lubricants, chemical fluids, or gases.

B-2.4 Adjust. To maintain or regulate, within prescribed limits, by bringing into proper or exact position, or by setting the operating characteristics to specified parameters.

B-2.5 Aline. To adjust specified variable elements of an item to bring about optimum or desired performance.

B-2.6 Calibrate. To determine and cause corrections to be made or to be adjusted on instruments or test, measuring, and diagnostic equipments used in precision measurement. Consists of comparisons of two instruments, one of which is a certified standard of known accuracy, to detect and adjust any discrepancy in the accuracy of the instrument being compared.

B-2.7 Remove/Install. To remove and install the same item when required to perform service or other maintenance functions. Install may be the act of placing, seating, or fixing into position a spare, repair part, or module (component or assembly) in a manner to allow the proper functioning of an equipment or system.

B-2.8. Replace. To remove an unserviceable item and install a serviceable counterpart in its place. "Replace" is authorized by the MAC and is shown as the 3d position code of the SMR code.

B-2.9. Repair. The application of maintenance services[1], including fault location/troubleshooting[2], removal/installation, and disassembly/assembly[3] procedures, and maintenance actions[4] to identify troubles and restore serviceability to an item by correcting specific damage, fault, malfunction, or failure in a part, subassembly, module (component or assembly), end item, or system.

B-2.10. Overhaul. That maintenance effort (service/action) prescribed to restore an item to a completely serviceable/operational condition as required by maintenance standards in appropriate technical publication (i.e., DMWR). Overhaul does not normally return an item to like new condition.

B-2.11. Rebuild. Consists of those services/actions necessary for the restoration of unserviceable equipment to a like new condition in accordance with original manufacturing standards. Rebuild is the highest degree of materiel maintenance applied to Army equipment. The rebuild operation includes the act of returning to zero those age measurement (hour/miles, etc.) considered in classifying Army equipment/components.

B-3. EXPLANATION of COLUMNS in the MAC, SECTION II

B-3.1. Column 1, Group Number. Column 1 lists functional group code numbers, the purpose of which is to identify maintenance significant components, assemblies, subassemblies, and modules with the next higher assembly. End item group number shall be "00."

B-3.2. Column 2, Component/Assembly. Column 2 contains the names of components, assemblies, subassemblies, and modules for which maintenance is authorized.

B-3.3. Column 3, Maintenance Function. Column 3 lists the functions to be performed on the item listed in Column 2. (For detailed explanation of these functions, see paragraph B-2.)

B-3.4. Column 4, Maintenance Level. Column 4 specifies, by the listing of a work time figure in the appropriate subcolumn(s), the level of maintenance authorized to perform the function listed in Column 3. This figure represents the active time required to perform that maintenance function at the indicated level of maintenance. If the number or complexity of the tasks within the listed maintenance function vary at different maintenance categories, appropriate work time figures will be shown for each category. The work time figure represents the average time required to restore an item (assembly, subassembly, component, module, end item, or system) to a serviceable condition under typical field operating conditions. This time includes preparation time (including any necessary disassembly/assembly time), troubleshooting/fault location time, and quality assurance/quality control time in addition to the time required to perform the specific tasks identified for the maintenance functions authorized in the

---

[1] *Services - inspect, test, service, ajust, aline, calibrate, and/or replace.*

[2] *Fault locate/troubleshoot - The process of investigating and detecting the cause of equipment malfunctioning; the act of isolating a fault within a system or unit under test (UUT).*

[3] *Disassemble/assemble - encompasses the step-by-step tahing apart (or breakdown) of a spare/functional group coded item to the level of its least componency identified as maintenance significant (i.e., assigned an SMR code) for the level of maintenance under consideration.*

[4] *Actions - welding, grinding, riveting, straightening, fining remachinery, and/or resurfacing.*

maintenance allocation chart. The symbol designations for the various maintenance categories are as follows:

C ..... Operator or crew

O ..... Unit Maintenance

F ..... Direct Support Maintenance

H ..... General Support Maintenance

L ..... Specialized Repair Activity (SRA)[1]

D ..... Depot maintenance

B-3.5 Column 6, Tools and Equipment. Column 5 specifies, by code, those common tool sets (not individual tools) and special tools, TMDE, and support equipment required to perform the designated function.

B-3.6 Column 6, Remarks. This column shall, when applicable, contain a letter code, in alphabetic order, which shall be keyed to the remarks contained in Section IV.

B-4 EXPLANATION of COLUMNS in TOOL and TEST EQUIPMENT REQUIREMENTS, SECTION III.

B-4.1 Column 1, Reference Code. The tool and test equipment reference code correlates with a code used in the MAC, Section II, Column 5.

B-4.2 Column 2, Maintenance Category. The lowest category of maintenance authorized to use the tool or test equipment.

B-4.3 Column 3, Nomenclature. Name or identification of the tool or test equipment.

B-4.4 Column 4, National Stock Number. The National stock number of the tool or test equipment.

B-4.5 Column 6, Tool Number. The manufacturer's part number.

B-5 EXPLANATION of COLUMNS in REMARKS, SECTION IV

B-5.1 Column 1, Reference Code. The code recorded in Column 6, Section II.

B-5.2 Column 2, Remarks. This column lists information pertinent to the maintenance function being performed as indicated in the MAC, Section II.

---

[1] *This maintenance level is not included in Section II, column (4) of the Maintenance Allocation Chart. To identify functions to this category of maintenance, enter a work time figure in the "H" column of Section II, column (4), and use an associated reference code in the Remarks column (6). Key the code to Section IV, Remarks, and explain the SRA complete repair application there. The explanatory remarks) shall reference the specific Repair Parts and Special Tools List (RPSTL) TM which contains additional SRA criteria and the authorized spare/repair parts.*

Section II MAINTENANCE ALLOCATION CHART FOR POWER UNITS AND POWER PLANTS

(1) Group Number	(2) Component/Assembly	(3) Maintenance Function	(4) Maintenance Level: Unit C	Unit O	Direct Support F	General Support H	Depot D	(5) Tools and Equipment	(6) Remarks
00	POWER PLANT/POWER UNIT	INSPECT	0.4						A,K
		INSPECT	0.2						B,C,D,K
0100	GENERATOR SET	INSPECT	0.2	0.5					K
		TEST		1.0	1.0				F,G
		SERVICE	0.3	0.3					E,F,G
		ADJUST		0.3					F,G
		REPAIR		1.5	1.5				E,F,G
		REMOVE/INSTALL			1.5			1,3	E,F,H
		REPLACE			1.5			1,3	
0200	ELECTRICAL SYSTEM								A
0201	CABLE ASSEMBLY	INSPECT	0.1	0.1					K
		TEST		0.3				1,2	
		REMOVE/INSTALL		0.3					
		REPAIR			0.6			1,3,4	
		REPLACE		0.3					
0202	SWITCH BOX ASSEMBLY	INSPECT	0.1	0.1					K
		REMOVE/INSTALL		0.5				1	
		REPAIR		0.3	1.0			1,5	
		REPLACE			0.5			1	I
020201	CONTROL PANEL ASSEMBLY	INSPECT	0.1	0.1					K
		REMOVE/INSTALL			1.0			1	
		REPLACE			1.0			1	I
02020101	HARNESS ASSEMBLY	INSPECT			0.1				
		TEST			0.2			1,3	
		REMOVE/INSTALL			0.4			1	
		REPAIR			0.9			1,3	L
		REPLACE			0.4			1	I
02020102	SWITCH	REMOVE/INSTALL		0.2				1	
		TEST		0.2				1,2	
		REPLACE		0.2				1	I
02020103	LIGHT, INDICATOR	REMOVE/INSTALL		0.2				1,2	
		TEST		0.2				1,2	
		REPLACE		0.2				1,2	I
020202	TERMINALS LOAD	INSPECT	0.1						K
		REMOVE/INSTALL		0.5				1	
		REPAIR		0.2				1	
		REPLACE		0.5				1	I
020203	LEADS/HARNESSES	INSPECT			0.1				
		TEST			0.2			1,3	
		REMOVE/INSTALL			0.4			1	
		REPAIR			0.8			1,3,4	L
		REPLACE			0.4			1	I

MAINTENANCE ALLOCATION CHART
FOR
POWER UNITS AND POWER PLANTS (continued)

(1)	(2)	(3)	(4) Maintenance Level					(5)	(6)
			Unit		Direct Support	General Support	Depot		
Group Number	Component/Assembly	Maintenance Function	C	O	F	H	D	Tools and Equipment	Remarks
020204	BUS BAR, GROUNDING	INSPECT			0.1				
		REMOVE/INSTALL			0.5			1	
		REPAIR			0.8			1,7	
		REPLACE			0.5			1	I
020205	CONTACTOR	REMOVE/INSTALL			0.5			1	
		TEST			0.2			1,3	
		REPLACE			0.5			1	I
0300	ACCESSORIES	INSPECT	0.1						K
0301	FIRE EXTINGUISHER	INSPECT	0.1	0.1					K
0302	FUEL DRAIN ASSEMBLY	INSPECT	0.1						K
		REMOVE/INSTALL		0.3				1	J
					0.3			1	
		REPAIR		0.3				1	J
					0.3			1	
		REPLACE		0.3				1	J
					0.3			1	
0400	TRAILER ASSEMBLY	INSPECT	0.2	0.2					H,K,N
0401	STEPS	INSPECT	0.1	0.1					A,B,C,K
		REMOVE/INSTALL		0.5				1	
		REPAIR			1.0			1,6	
		REPLACE		0.5				1	I
0402	ACCESSORY BOX	INSPECT	0.1						K
		REMOVE/INSTALL		0.2				1	
		REPAIR		0.5				1,5,6	
		REPLACE		0.2				1	I
0403	FENDERS	INSPECT	0.1						K
		REMOVE/INSTALL		1.0				1	
					2.0			1,8	M
		REPAIR			1.0			1,6	
		REPLACE		1.0				1	I
					2.0				I
0404	TRAILER LEVELING SUPPORT JACK	INSPECT	0.1						K
		SERVICE		0.2				1	
		REMOVE/INSTALL		0.3				1	
					0.5			1,8	M
		REPAIR		0.8				1	
		REPLACE		0.3				1	I
					0.5			1,8	I

SECTION III. TOOL AND TEST EQUIPMENT REQUIREMENTS
FOR
POWER UNITS AND POWER PLANTS

(1) TOOL OR TEST EQUIPMENT REF CODE	(2) MAINTENANCE LEVEL	(3) NOMENCLATURE	(4) NATIONAL/NATO STOCK NUMBER	(5) TOOL NUMBER
1	O,F	TOOL KIT,GENERAL MECHANIC'S	5180-00-177-7033	SC 5180-90-CL-N26
2	O	SHOP EQUIPMENT,AUTOMOTIVE MAINTENANCE AND REPAIR: ORGANIZATIONAL MAINTENANCE COMMON #1,LESS POWER	4910-00-754-0654	SC 4910-95-CL-A74
3	F	SHOP EQUIPMENT,ELECTRICAL REPAIR, SEMITRAILER MOUNTED:	4940-00-294-9517	SC 4940-95-CL-B05
4	F	CRIMPING TOOL, HYDRAULIC,WIRE SIZE 8 THRU 4/0	5130-00-762-9100	
5	O	RIVETER,BLIND HEAD	5120-00-148-5847	
6	F	TOOL KIT,BODY AND FENDER REPAIR	5180-00-357-7731	SC 5180-90-CL-N62
7	F	HELICOIL INSERTION TOOL	5180-00-935-0736	
8	F	RIVET GUN,PNEUMATIC		

SECTION IV. REMARKS

(1) REFERENCE CODE	(2) REMARKS
A	AN/MJQ-39 UNIT A ONLY.
B	AN/MJQ-39 UNIT B ONLY.
C	PU-800 AND PU-802 ONLY.
D	PU-801 ONLY.
E	REFER TO TM 9 6115-643-10 FOR GENERATOR SET OPERATOR MAINTENANCE.
F	REFER TO TM 9 6 115-643-24 FOR GENERATOR SET UNIT AND HIGHER LEVEL MAINTENANCE.
G	REFER TO TM 9-2815-254-24 FOR ENGINE MAINTENANCE.
H	REFER TO TM 9-2330-205-14&P FOR THE 2 1/2 TON TRAILER MAINTENANCE AND TM 9-2330-202-14&P FOR THE 3/4 TON TRAILER MAINTENANCE.
I	REPLACE IS THE SAME AS REMOVAL AND INSTALLATION.
J	FUEL DRAIN LINE FOR PU-801 IS REMOVED AT UNIT LEVEL MAINTENANCE.
K	PREVENTIVE MAINTENANCE CHECKS AND SERVICES (PMCS).
L	REFER TO APPENDIX G FOR REPAIR.
M	PU-801A ONLY.
N	REFER TO TM 9-2330-392-14&P FOR HIGH MOBILITY TRAILER MAINTENANCE.

APPENDIX C
COMPONENTS OF END ITEM (COEI) AND BASIC ISSUE ITEMS (BII) LISTS

Section I. INTRODUCTION

C-1 SCOPE.

This appendix lists components of the end items and basic issue items for the power unit and power plant to help you inventory the items for safe and efficient operation of the equipment.

C-2 GENERAL.

The Components of End Item and Basic Issue Items (BII) Lists are divided into the following sections:

C-2.1 Section II, Components of End Item. This listing is for information purposes only, and is not authority to requisition replacements. There are no components of end item for the power units and power plant.

C-2.2 Section III, Basic Issue Items. These essential items are required to place the (enter name of end item) in operation, operate it, and to do emergency repairs. Although shipped separately packaged, BII must be with the power units and power plant during operation and when it is transferred between property accounts. Listing these items is your authority to request/requisition them for replacement based on authorization of the end item by the TOE/MTOE. Illustrations are furnished to help you find and identify the items.

C-3 EXPLANATION OF COLUMNS.

C-3.1 Column (1). Column (1), Illus Number, gives you the number of the item illustrated.

C.3.2 Column (2). Column (2), National Stock Number, identifies the stock number of the item to be used for requisitioning purposes.

C-3.3 Column (3). Column (3), Description and Usable On Code, identifies the Federal item name (in all capital letters) followed by a minimum description when needed. The last line below the description is the CAGEC (Commercial and Government Entity Code) (in parenthesis) and the part number. If the item YOU need is not the same for different models of the equipment, a Usable On Code will appear on the right side of the description column on the same line as the part number. These codes are identified below:

CODE	USED ON
EVX	AN/MJQ-39
EVW	PU-800
EVV	PU-801
ESV	PU-802
FMG	PU-801A

C-3.4 Column (4). Column (4), U/I (unit of issue), indicates how the item is issued for the National Stock Number shown in column two.

C-3.5 Column (5). Column (5), Qty Reqd, indicates the quantity required.

SECTION II. COMPONENTS OF END ITEM

(1)	(2)	(3)	(4)	(5)
ILLUS NUMBER	NATIONAL STOCK NUMBER	DESCRIPTION CAGEC AND PART NUMBER	USABLE ON CODE U/I	QTY REQD
		THIS SECTIN IS NOT APPLICABLE TO THE POWER PLANT AND POWER UNITS.		

SECTION III. BASIC ISSUE ITEMS

(1)	(2)	(3)		(4)	(5)
ILLUS NUMBER	NATIONAL STOCK NUMBER	DESCRIPTION CAGEC AND PART NUMBER	USABLE ON CODE	U/I	QTY REQD
1		MANUAL, TECHNICAL TM 9-6115-661-13&P		EA	1

APPENDIX D
ADDITIONAL AUTHORIZATION LIST

Section I. INTRODUCTION

D-1. SCOPE

This appendix lists additional items you are authorized for the support of the power units and power plant.

D-2. GENERAL

This list identifies items that do not have to accompany the equipment and that do not have to be turned in with it. These items are all authorized to you by CTA, MTOE, TDA, or JTA.

D-3. EXPLANATION OF LISTING

National stock numbers, descriptions, and quantities are provided to help you identify and request the additional items you require to support this equipment. The items are listed in alphabetical sequence by item name. If the item you require differs between serial numbers of the same model, effective serial numbers are shown in the last line of the description. If item required differs for different models of this equipment, the model is shown under the "Usable on" heading in the description column. These codes are identified as:

CODE	USED ON
EVX	AN/MJQ-39
EVW	PU-800
EVV	PU-801
ESV	PU-802
FMG	PU-801A

Section II. ADDITIONAL AUTHORIZED ITEMS LIST

(1) National stock Number	(2) Description CAGEC and Part Number Usable on Code	(3) U/I	(4) Qty Recm
5120-00-494-1911	WRENCH, PLIER, CURVED JAW (81348) GGG-W-00649, TYPE 1, CLASS 2, STYLE B	EA	2
7240-00-222-3088	CAN, GASOLINE, MILITARY (80372) 42-D-1280	EA	1
7240-00-177-6154	SPOUT, CAN, FLEXIBLE (81349) MIL-S-1285	EA	1

APPENDIX E
EXPENDABLE AND DURABLE ITEMS LIST

Section I. INTRODUCTION

E-1 SCOPE.

This appendix lists expendable and durable items that you will need to operate and maintain the Power Unite (PU-800, PU-801, PU-801A, and PU-802) and AN/MJQ-39 Power Plant. This listing is for information only and is not authority to requisition the listed items. These items are authorized to you by (CTA 50-790, Expendable/Durable Items (except medical, class V repair parts, and heraldic items), or CTA 8-100, Army Medical Department Expendable/Durable Items.

E-2 EXPLANATION OF COLUMNS

E-2.1 Column 1. Item number. This number is assigned to the entry in the listing and is referenced in the narrative instructions to identify the item (e.g. "Use drycleaning solvent P-D-680, Item 1, Appendix E").

E-2.2 Column 2, Level. This column identifies the lowest level of maintenance that requires the item.

E-2.3 Column 3, National stock number. This is the national stock number assigned to the item which you can use to requisition it.

E-2.4 Column 4, Item name, description, Commercial and Government Entity Code (CAGEC), and Dart number. This provides the other information you need to identify the item.

E-2.5 Column 5, Unit of Measure. This code shows the physical measurement or count of an item, such as gallon, dozen, gross, etc.

SECTION II. EXPENDABLE AND DURABLE ITEMS LIST

(1) ITEM NUMBER	(2) LEVEL	(3) NATIONAL STOCK NUMBER	(4) ITEM NAME,DESCRIPTION CAGEC,PART NUMBER	(5) U/M
1	O	6850-01-331-3349	SOLVENT,DRYCLEANINGAND DEGREASING,P-D-680, TYPE III (81349)(5 GALLON)	GL
2	O	6850-01-331-3350	SOLVENT,DRYCLEANING AND DEGREASING,P-D-680, TYPE III (81349)(55 GALLON)	GL
3	O	9150-00-190-0904	GREASE,AUTOMOTIVE/ARTILLERY GAA MIL-G-10924 (81349)	LB
4	O	9150-00-189-6727	OIL,LUBRICATION OE/HDO-10 MIL-D-2104 (81349)	QT
5	O,F	8040-00-664-4318	ADHESIVE, 9995460 (18876)	PT
6	O		SOLDER, (81348) SN60PB40	SL

APPENDIX F

UNIT AND DIRECT SUPPORT MAINTENANCE

REPAIR PARTS AND SPECIAL TOOLS LIST

Section I. INTRODUCTION

F-1 SCOPE.

This RPSTL lists and authorizes spares and repair parts; special tools; special test, measurement, and diagnostic equipment (TMDE); and other special support equipment required for performance of organizational maintenance of the Power Unit (PU-800, PU-801, PU-801A, and PU-802) and AN/MJQ-39 Power Plant. It authorizes the requisitioning, issue, and disposition of spares, repair parts and special tools as indicated by the source, maintenance and recoverability (SMR) codes. Power Plant AN/MJQ-39 is made up of two Power Units PU-800 and a switch box.

F-2 GENERAL.

In addition to Section I, Introduction, the Repair Parts and Special Tools List is divided into the following sections:

F-2.1 Section II. - Repair Parts List. A list of spares and repair parts authorized by this RPSTL for use in the performance of maintenance. The lists also includes parts which must be removed for replacement of the authorized parts. Parts lists are composed of functional groups in ascending alphanumeric sequence, with the parts in each group listed in ascending figure and item number sequence.

F-2.2 Section III - Special Tools List. A list of special tools, special TMDE, and other special support equipment authorized by this RPSTL (as indicated by Basis of Issue (BOI) information in DESCRIPTION AND USABLE ON CODE (UOC) column) for the performance of maintenance. There is no Section III with this appendix.

F-2.3 Section IV. - Cross-reference Indexes. A list, in National item identification number (NIIN) sequence, of all National stock numbered items appearing in the listings, followed by a list in alphanumeric sequence of all part numbers appearing in the listing. National stock numbers and part numbers are cross-referenced to each illustration figure and item number appearance. The figure and item number index lists figure and item number in alphanumeric sequence and cross-references NSN, CAGEC and part number.

F-3 EXPLANATION of COLUMNS (SECTIONS II and III).

F-3.1 ITEM NO, (Column (1)). Indicates the number used to identify items called out in the illustration.

F-3.2 SMR CODE (Column (2)). The Source, Maintenance, and Recoverability (SMR) code is a 5-position code containing supply/requisitioning information, maintenance category authorization criteria, and disposition instruction, as shown in the following breakout:

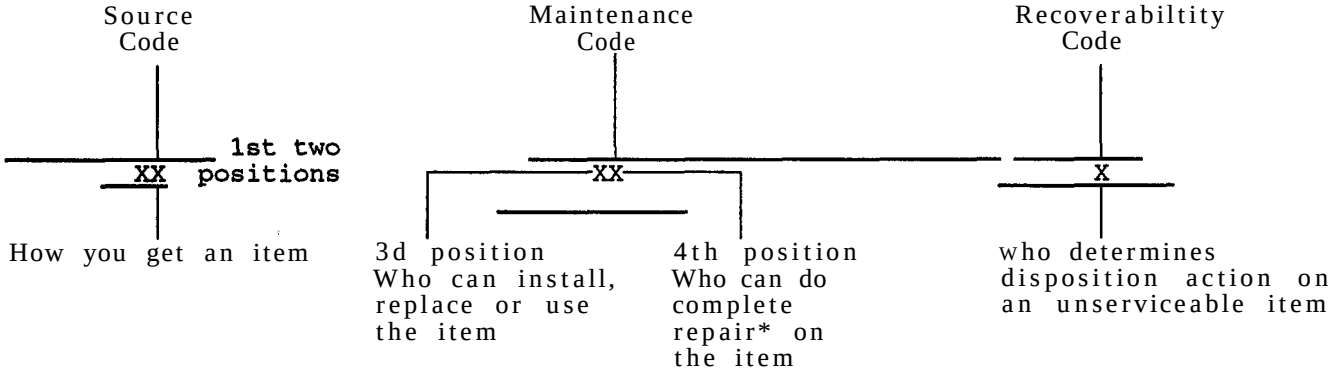

*Complete Repair: Maintenance capacity, capability, and authority to perform all corrective maintenance taske of the "Repair" function in a use/user environment in order to restore serviceability to a failed item.

F-3.2.1 Source Code The source code tells you how to get an item needed for maintenance, repair, or overhaul of an end item/equipment. Explanations of source codes follows:

Code	Explanation
PA PB PC** PD PE PF PG	Stocked items; use the applicable NSN to request/requisition items with these codes. They are authorized to the category indicated by the code entered in the 3d position of the SMR code. **NOTE: Items coded PC are subject to deterioration.
KD KF KB	Items with these codes are not to be requested/requisitioned individually. They are part of a kit which is authorized to the maintenance category indicated in the 3d position of the SMR code. The complete kit must be requisitioned and applied.

Code	Explanation
MO- (Made at Unit Level) MF- (Made at DS Level) MH- (Made at GS Level) ML- (Made at Specialized Repair Act (SRA)) MD- (Made at Depot)	Items with these codes are not to be requested/ requisitioned individually. They must be made from bulk material which is identified by the part number in the DESCRIPTION AND USABLE ON CODE Bulk Material group of the repair parts list in the (UOC) column and listed in the Bulk Material group of the repair parts list in this manual. If the item is authorized to you by the 3d position code of the SMR code, but the source code indicates it is made at a higher level, order the item from the higher level of maintenance.
AO- (Assembled at Unit Level) AF- (Assembled at DS Level) AH- (Assembled at GS Level) AL- (Assembled at SRA) AD- (Assembled at Depot)	Items with these codes are not to be requested/ requisitioned individually. The parts that make up the assembled item must be requisitioned or fabricated and assembled at the level of maintenance indicated by the source code. If the 3d position code of the SMR code authorizes you to replace the item, but the source code indicates the item is assembled at a higher level, order the item from the higher level of maintenance.

XA - Do not requisition an "XA"-coded item. Order its next higher assembly. (Also, refer to the NOTE below.)

XB - If an "XB" item is not available from salvage, order it using the CAGEC and part number given.

XC - Installation drawing, diagram, instruction sheet, field service drawing, that is identified by manufacturer's part number.

XD - Item is not stocked. Order an "XD"-coded item through normal supply channels using the CAGEC and part number given, if no NSN is available.

NOTE

Cannibalization or controlled exchange, when authorized, maybe used as a source of supply for items with the above source codes, except for those source coded "XA" or those aircraft support items restricted by requirements of AR 700-42.

F-3.2.2 Maintenance Code. Maintenance codes tells you the level(s) of maintenance authorized to USE and REPAIR support items. The maintenance codes are entered in the third and fourth positions of the SMR Code as follows:

F-3.2.2.1 Maintenance Code Third Position. The maintenance code entered in the third position tells you the lowest maintenance level authorized to remove, replace, and use an item. The maintenance code entered in the third position will indicate authorization to one of the following levels of maintenance.

Code	Application/Explanation
C	-Crew or operator maintenance done within organizational or aviation unit maintenance.
O	-Unit maintenance can remove, replace, and use the item.
F	-Direct support or aviation intermediate level can remove, replace, and use the item.
H	-General support level can remove, replace, and use the item.
L	-Specialized repair activity can remove, replace, and use the item.
D	-Depot level can remove, replace, and use the item.

F-3.2.1.2 Maintenance Code Fourth Position. The maintenance code entered in the fourth position tells whether or not the item is to be repaired and identifies the lowest maintenance level with the capability to do complete repair (i.e., perform all authorized repair functions.) (NOTE: Some limited repair may be done on the item at a lower level of maintenance, if authorized by the Maintenance Allocation Chart (MAC) and SMR codes.) This position will contain one of the following maintenance codes.

Code	Application/Explanation
O	-Unit is the lowest level that can do complete repair of the item.
F	-Direct support or aviation intermediate is the lowest level that can do complete repair of the item.
H	-General support is the lowest level that can do complete repair of the item.
L	-Specialized repair activity (designate the specialized repair activity) is the lowest level that can do complete repair of the item.
D	-Depot is the lowest level that can do complete repair of the item.
Z	-Nonreparable. No repair is authorized.
B	-No repair is authorized. (No parts or special tools are authorized for the maintenance of a “B” coded item). However, the item maybe reconditioned by adjusting, lubricating, etc., at the user level.

F-3.2.3 Recoverability Code. Recoverability codes are assigned to items to indicate the disposition action on unserviceable items. The recoverability code is entered in the fifth position of the SMR Code as follows:

Recoverability Codes	Application/Explanation
Z	-Nonreparable item. When unserviceable, condemn and dispose of the item at the level of maintenance shown in 3d position of SMR Code.
O	-Reparable item. When uneconomically reparable, condemn and dispose of the item at organizational or aviation unit level.
F	-Reparable item. When uneconomically reparable condemn and dispose of the item at the direct support or aviation intermediate level.
H	-Reparable item. When uneconomically reparable, condemn and dispose of the item at the general support level.
D	-Reparable item. When beyond lower level repair capability, return to depot. Condemnation and disposal of item not authorized below depot level.
L	-Reparable item. Condemnation and disposal not authorized below specialized repair activity (SRA).
A	-Item requires special handling or condemnation procedures because of specific reasons (e.g., precious metal content, costly item, critical material, or hazardous material). Refer to appropriate manuals/directives for specific instructions.

F-3.2.3 CAGEC (Columm (3)). The Commercial and Government Entity Code (CAGEC) is used to identify the manufacturer, distributor, or Government agency, etc., that supplies the item.

F-3.2.4 PART NUMBER (Column (4)). Indicates the primary number used by the manufacturer (individual, company, firm, corporation, or Government activity), which controls the design and characteristics of the item by means of its engineering drawings, specifications standards, and inspection requirements to identify an item or range of items.

NOTE

When you use a NSN to requisition an item, the item you receive may have a different part number from the part ordered.

F-3.2.5 DESCRIPTION AND USABLE ON CODE (UOC) (Column (5)). This column includes the following information:

a. The Federal item name and, when required, a minimum description to identify the item.

b. The statement END OF FIGURE appears just below the last item description in Column 5 for a given figure in both Section II and Section III.

F-3.2.6 QTY (Column (6)). The QTY (quantity per figure column) indicates the quantity of the item used in the breakout shown on the illustration figure, which is prepared for a functional group, subfunctional group, or an assembly. A "V" appearing in this column in lieu of a quantity indicates that the quantity is variable and the quantity may vary from application to application.

F-4 EXPLANATION of COLUMNS (SECTION IV).

F-4.1 NATIONAL STOCK NUMBER (NSN) INDEX.

F-4.1.1 STOCK NUMBER column. This column lists the NSN by National item identification number (NIIN) sequence. The NIIN consists of the last

NSN

nine digits of the NSN (i.e., 5305-01-674-1467). When using this

NIIN

column to locate an item, ignore the first 4 digits of the NSN. However, the complete NSN should be used when ordering items by stock number.

F-4.1.2 FIG. column. This column lists the number of the figure where the item is identified/located. The figures are in numerical order in Section II and Section III.

F-4.1.3 ITEM column. The item number identifies the item associated with the figure listed in the adjacent FIG. column. This item is also identified by the NSN listed on the same line.

F-4.2 PART NUMBER INDEX. Part numbers in this index are listed by part number in ascending alphanumeric sequence (i.e., vertical arrangement of letter and number combination which places the first letter or digit of each group in order A through Z, followed by the numbers 0 through 9 and each following letter or digit in like order).

F-4.2.1 CAGEC column. The Commercial and Government Entity Code (CAGEC) is used to identify the manufacturer, distributor, or Government agency, etc., that supplies the item.

F-4.2.2 PART NUMBER column. Indicates the primary number used by the manufacturer (individual, firm, corporation, or Government activity), which controls the design and characteristics of the item by means of its engineering drawings, specifications standards, and inspection requirements to identify an item or range of items.

F-4.23 STOCK NUMBER column. This column lists the NSN for the associated part number and manufacturer identified in the PART NUMBER and CAGEC columns to the left.

F-4.2.4 FIG. column. This column lists the number of the figure where the item is identified/located in Section II and III.

F-4.2.5 ITEM column. The item number is that number assigned to the item as it appears in the figure referenced in the adjacent figure number column.

F-43 FIGURE AND ITEM NUMBER INDEX

F-4.3.1 FIG. Column. The column lists the number of the figure where the item is identified/located in Section II and III.

F-4.3.2 ITEM Column. The item number is that number assigned to the item as it appears in the figure referenced in the adjacent figure number column.

F-4.3.3 STOCK NUMBER Column. This column lists the NSN for the item.

F-4.3.4 CAGEC Column. The Commercial and Government Entity Code (CAGEC) is used to identify the manufacturer, distributor, or Government agency, etc., that supplies the item.

F-4.3.5 PART NUMBER Column. Indicates the primary number used by the manufacturer (individual, firm, corporation, or Government activity), which controls the design and characteristics of the item by means of its engineering drawings, specifications standards, and inspection requirements to identify an item or range of items.

F-5 SPECIAL INFORMATION.

F-5.1 Usable on Code. The usable on code appears in the lower left corner of the DESCRIPTION AND USABLE ON CODE (UOC) column heading. Usable on codes are shown as "UOC . . ." on the next line below the last line of the applicable item description/nomenclature. The UOC entry begins at the left edge of the column. Uncoded items are applicable to all models. Identification of the usable on codes used in this publication are:

CODE	USED ON
EVX	AN/MJQ-39
EVW	PU-800
EVV	PU-801
ESV	PU-802
FMG	PU-801A

It takes two Power Units PU-800 to makeup one Power Plant AN/MJQ-39. Therefore, most parts for Power Plant AN/MJQ-39 will have a UOC of EVW. Only parts unique to Power Plant AN/MJQ-39 will have a UOC of EVX.

F-5.2 Fabrication Instructions. Bulk materials required to manufacture items are listed in the BULK MATERIALS functional group of this RPSTL. Part numbers for bulk materials are also referenced in the DESCRIPTION AND UOC column of the line item entry for the item to be manufactured/fabricated. Detailed fabrication instructions for the items source coded to be manufactured or fabricated are contained in Appendix G.

F-5.3 Index Numbers. Items listed under FIG.BULK in the DESCRIPTION AND UOC column will have an index number shown in the ITEM NO. column. This index number is used as a cross-reference between the National Stock Number/Part Number Index and the bulk materials list in Section II.

F-6 HOW to LOCATE REPAIR PARTS.

F-6.1 When National Stock Number or Part Number is Not Known.

F-6.1.1 **First.** Using the table of contents, determine the assembly group or subassembly group to which the item belongs. This is necessary since figures are prepared for assembly groups and subassembly groups, and listings are divided into the same groups.

F-6.1.2 **Second.** Find the figure covering the assembly group or subassembly group to which the item belongs.

F-6.1.3 **Third.** Identify the item on the figure and use the Figure and Item Number Index to find the NSN.

F-6.2 When National Stock Number or Part Number is Known.

F-6.2.1 **First.** Using the National Stock Number or the Part Number Index, find the pertinent National Stock Number or Part Number. The NSN index is in National Item Identification Number (NIIN) sequence (see 4.4(1)). The part numbers in the Part Number index are listed in ascending alphanumeric sequence (see 4.b). Both indexes cross-reference you to the illustration/figure and item number of the item you are looking for.

F-6.2.2 **Second.** Turn to the figure and item number, verify that the item is the one you're looking for, then locate the item number in the repair parts list for the figure.

F-7 ABBREVIATIONS.

Not applicable.

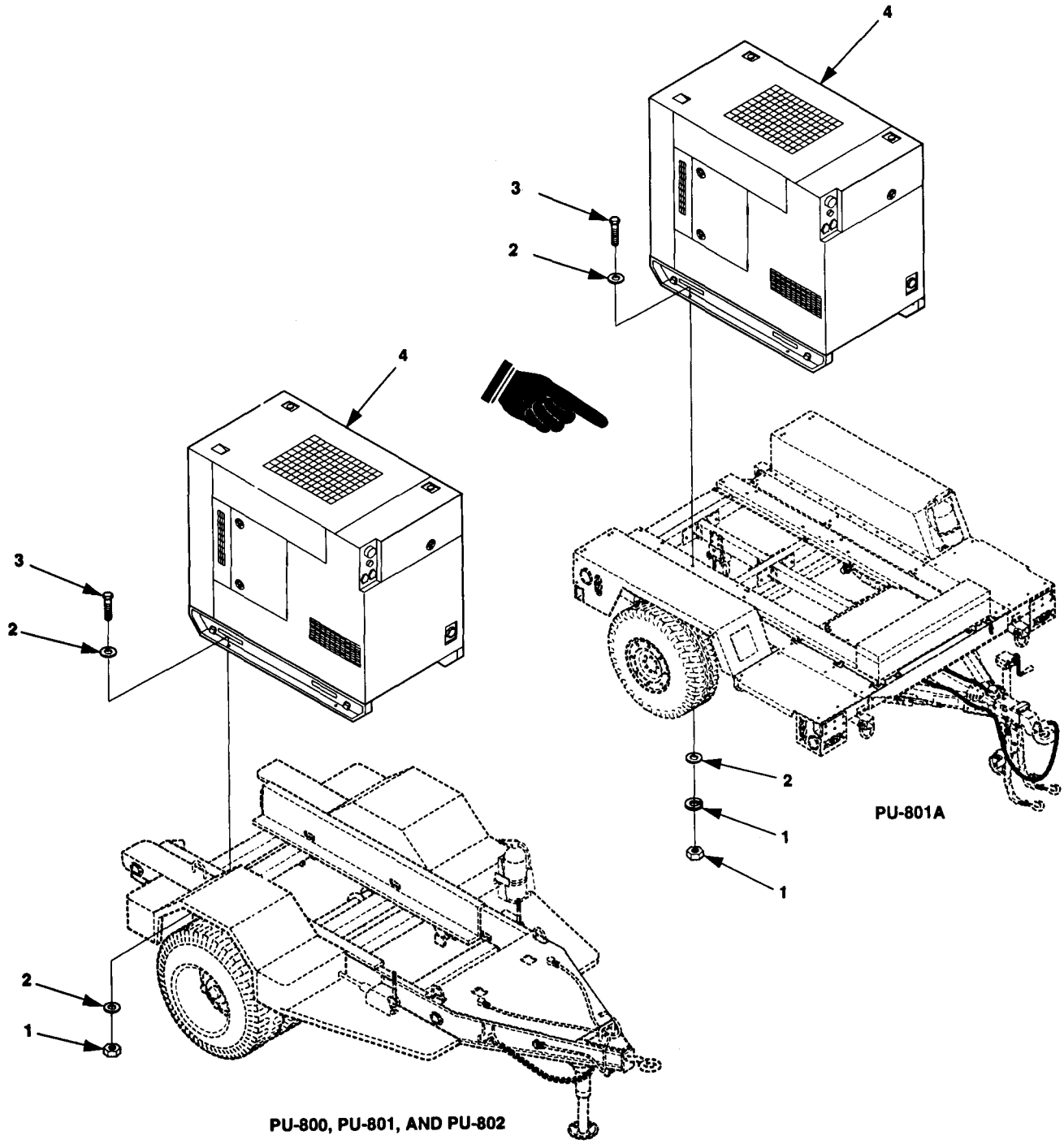

Figure F-1. Genertor Set Installation.

(1) ITEM NO	(2) SMR CODE	(3) CAGEC	(4) PART NUMBER	(5) DESCRIPTION AND USABLE ON CODES (UOC)	(6) QTY
				GROUP 01 GENERATOR SET	
				FIG.1 GENERATOR SET INSTALLATION	
1	PAFZZ	96906	MS51922-33	NUT,SELF-LOCKING,HE UOC:ESV,EVV,EVW	4
1	PAFZZ	96906	MS51971-5	NUT,PLAIN,HEX HEAD UOC:FMG	4
1	PAFZZ	96906	MS35338-143	WASHER,LOCK UOC:FMG	4
2	PAFZZ	96906	MS51412-9	WASHER,FLAT UOC:ESV,EVV,EVW	8
2	PAFZZ	96906	MS15795-817	WASHER,FLAT UOC:FMG	8
3	PAFZZ	80204	B1821BH050C175N	SCREW,CAP,HEXAGON H UOC:ESV,EVV,EVW	4
3	PAFZZ	96906	MS35307-414	SCREW,CAP,HEXAGON H UOC:FMG	4
4	PDFHH	30554	88-814	GEN SET,15KW,400 HZ UOC:EVW	1
4	PDFHH	30554	88-804	GEN SET,15KW,50/60 HZ UOC:ESV,EVV,FMG	1
				END OF FIGURE	

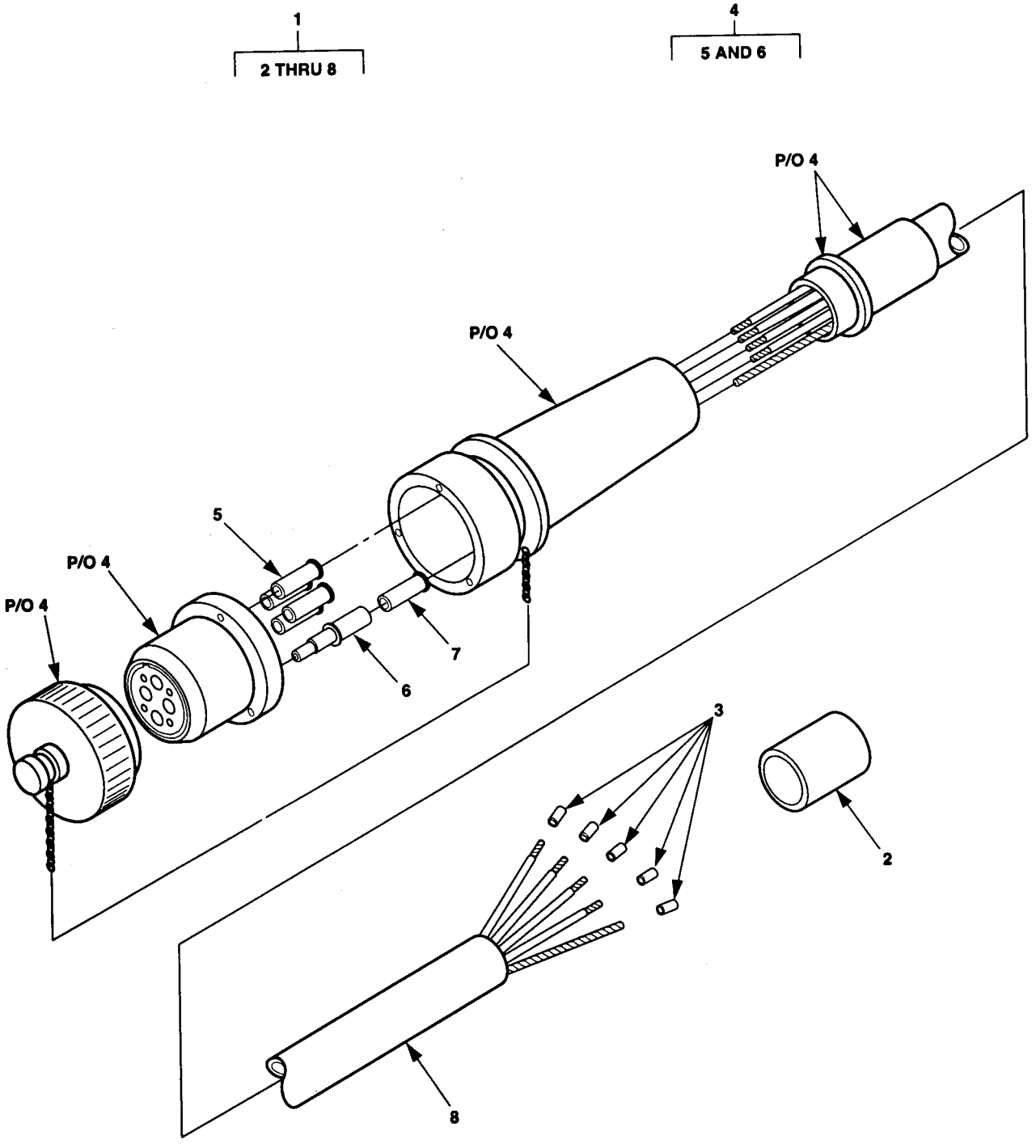

Figure F-2. Cable Assembly.

(1) ITEM NO	(2) SMR CODE	(3) CAGEC	(4) PART NUMBER	(5) DESCRIPTION AND USABLE ON CODES (UOC)	(6) QTY
				GROUP 02 ELECTRICAL SYSTEM	
				FIG. 2 CABLE ASSEMBLY	
1	PBOFF	97403	13229E5674	.CABLE ASSEMBLY,15KW UOC:EVX	1
2	MFFZZ	19099	13229E5674-3	..INSULATION SLEEVING MAKE FROM P/N M23053/5-112-0(81349) 3.75 IN. REQUIRED UOC:EVX	1
3	MFFZZ	19099	13229E5674-4	..INSULATION SLEEVING MAKE FROM P/N M23053/5-107-9 (81349) 1 INCH REQUIRED UOC:EVX	5
4	PAFFF	96906	MS90557C32413SY	..CONNECTOR,PLUG,ELEC UOC:EVX	1
5	PAFZZ	81349	M39029/49-331	...CONTACT,ELECTRICAL UOC:EVX	4
6	PAFZZ	81349	M39029/49-329	...CONTACT,ELECTRICAL UOC:EVX	1
7	PAFZZ	96906	MS3348-6-8L	..CONTACT,ELECTRICAL UOC:EVX	1
8	MFFZZ	19099	13229E5674-2	..CABLE MAKE FROM P/N CO-04HDF(4/4-4/12R)1290(81349)200 IN.REQ UOC:EVX	1
				END OF FIGURE	

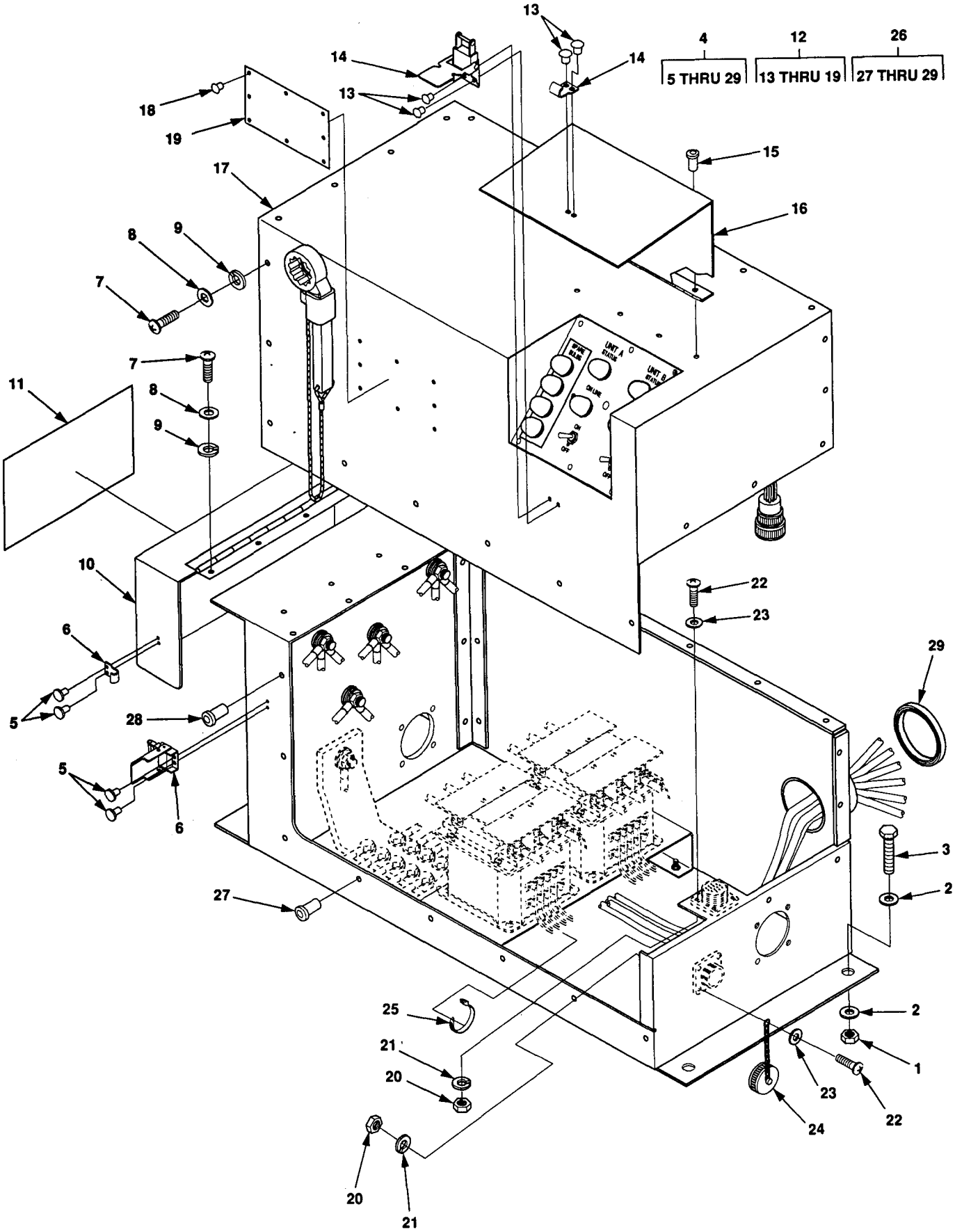

Figure F-3. Switch Box Assembly

(1) ITEM NO	(2) SMR CODE	(3) CAGEC	(4) PART NUMBER	(5) DESCRIPTION AND USABLE ON CODES (UOC)	(6) QTY
				GROUP 02 ELECTRICAL SYSTEM	
				FIG. 3 SWITCH BOX ASSEMBLY	
1	PAFZZ	96906	MS35649-2382	.NUT,PLAIN,HEXAGON UOC:EVX	4
2	PAFZZ	96906	MS51412-27	.WASHER,FLAT UOC:EVX	8
3	PAFZZ	80204	B1821BH038C138N	.SCREW,CAP,HEXAGON H UOC:EVX	4
4	XDFFF	97403	13229E5795-1	.SWITCH BOX ASSEMBLY UOC:EVX	1
5	PAOZZ	96906	MS20601AD4W4	..RIVET,BLIND UOC:EVX	4
6	PAOZZ	96906	MS18015-1	..CATCH,CLAMPING UOC:EVX	1
7	PAOZZ	96906	MS51957-46	..SCREW,MACHINE UOC:EVX	25
8	PAOZZ	96906	MS15795-807	..WASHER,FLAT UOC:EVX	25
9	PAOZZ	96906	MS35338-137	..WASHER,LOCK UOC:EVX	25
10	XDOFF	97403	13229E5804	..DOOR,LOAD TERMINAL UOC:EVX	1
11	MDOZZ	97403	13229E5728-2	...MARKER,WARNING UOC:EVX	1
12	XDOOO	97403	13229E5801-1	...COVER ASSY,SWITCH B UOC:EVX	1
13	PAOZZ	96906	MS20600AD4W3	...RIVET,BLIND UOC:EVX	4
14	PAOZZ	96906	MS18015-1	...CATCH,CLAMPING UOC:EVX	1
15	PAOZZ	96906	MS20470AD4-4-5	...RIVET,SOLID UOC:EVX	4
16	XDOZZ	97403	13229E5835	...ENCLOSURE,TOP,SWITC UOC:EVX	1
17	XAOZZ	97403	13229E5834	...COVER,SWITCH BOX UOC:EVX	1
18	PAOZZ	96906	MS20600AD4W2	...RIVET,BLIND UOC:EVX	8
19	MDOZZ	97403	13229E5792-1	...PLATE,IDENTIFICATIO SCHEMATIC UOC:EVX	1
20	PAOZZ	96906	MS35649-244	..NUT,PLAIN,HEXAGON UOC:EVX	8
21	PAOZZ	96906	MS35338-135	..WASHER,LOCK UOC:EVX	8
22	PAOZZ	96906	MS51957-18	..SCREW,MACHINE UOC:EVX	8
23	PAOZZ	88044	AN960-C4	..WASHER,FLAT UOC:EVX	8
24	PAOZZ	96906	MS25043-18DA	..COVER,ELECTRICAL CO UOC:EVX	1

(1) ITEM NO	(2) SMR CODE	(3) CAGEC	(4) PART NUMBER	(5) DESCRIPTION AND USABLE ON CODES (UOC)	(6) QTY
25	PAFZZ	96906	MS3367-1-9	..STRAP,TIEDOWN,ELECT UOC:EVX	1
26	XDFFF	97403	13229E5796-1	..HOUSING,SWITCH BOX UOC:EVX	1
27	PAOZZ	96906	MS27130-96	...NUT,PLAIN,BLIND,RIV UOC:EVX	6
28	PAOZZ	96906	MS27130-93	...NUT,PLAIN,BLIND,RIV UOC:EVX	19
29	MOOZZ	19099	13229E5796-1-15	...GROMMET,PLASTIC EDG MAKE FROM P/N MS21266-2N (96906) AS REQUIRED UOC:EVX	1

END OF FIGURE

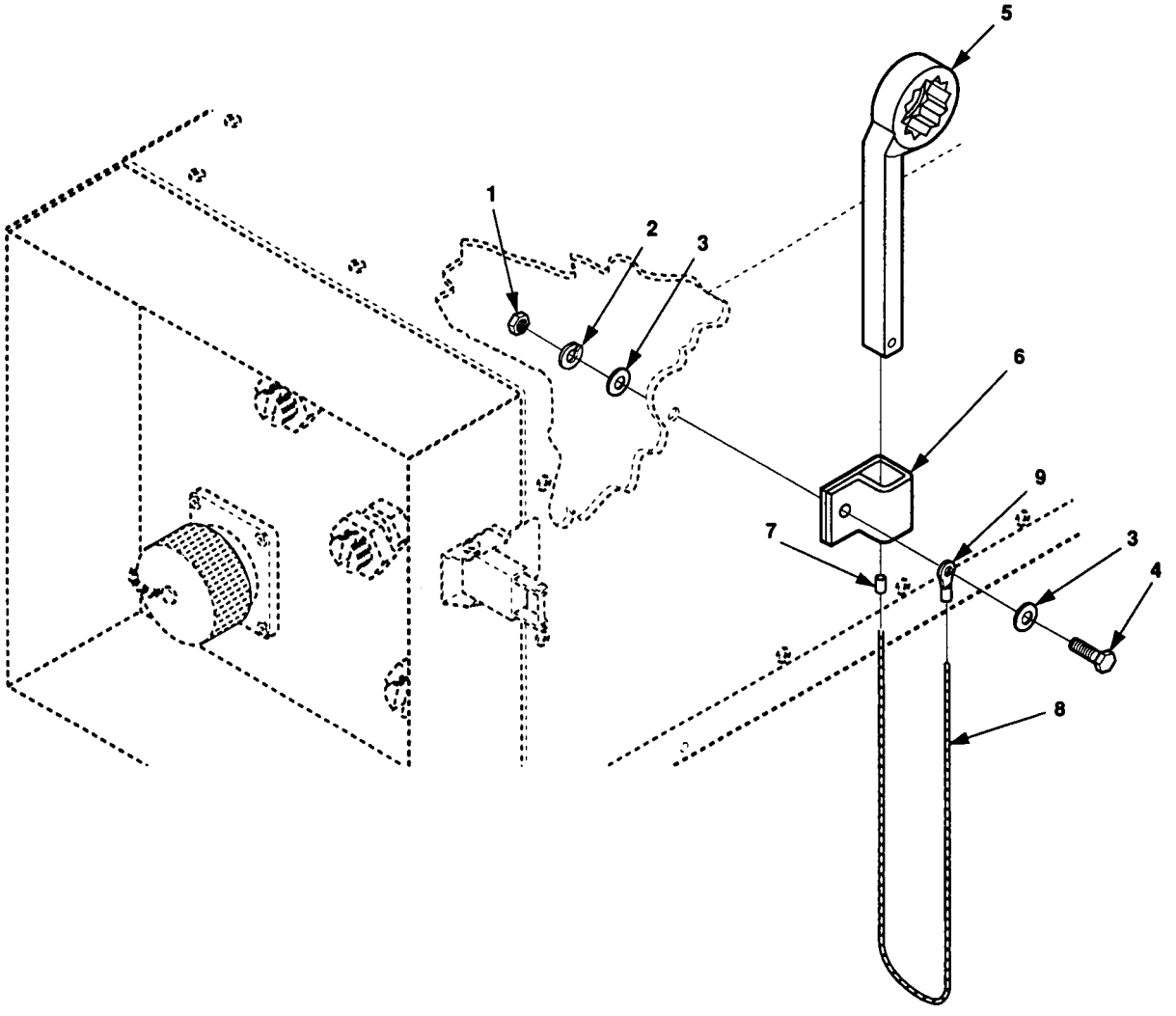

Figure F-4. Load Terminal Wrench Assembly

(1) ITEM NO	(2) SMR CODE	(3) CAGEC	(4) PART NUMBER	(5) DESCRIPTION AND USABLE ON CODES (UOC)	(6) QTY
				GROUP 02 ELECTRICAL SYSTEM	
				FIG. 4 LOAD TERMINAL WRENCH ASSY	
1	PAOZZ	96906	MS35650-3254	..NUT,PLAIN,HEXAGON UOC:EVX	1
2	PAOZZ	96906	MS35338-139	..WASHER,LOCK UOC:EVX	1
3	PAOZZ	96906	MS15795-852	..WASHER,FLAT UOC:EVX	2
4	PAOZZ	96906	MS35308-306	..SCREW,CAP,HEXAGON H UOC:EVX	1
5	PAOZZ	12670	CLE-403001	..WRENCH,BOX UOC:EVX	1
6	PAOZZ	30554	72-2135	..CLAMP,LOOP UOC:EVX	1
7	PAOZZ	59730	2G4-2	..SPLICE,CONDUCTOR UOC:EVX	1
8	MOOZZ	19099	13229E5795-1-65	..ROPE,FIBROUS MAKE FROM P/N C1832 (88001) 40 INCHES REQUIRED UOC:EVX	1
9	PAOZZ	96906	MS20659-111	.TERMINAL,LUG UOC:EVX	1
				END OF FIGURE	

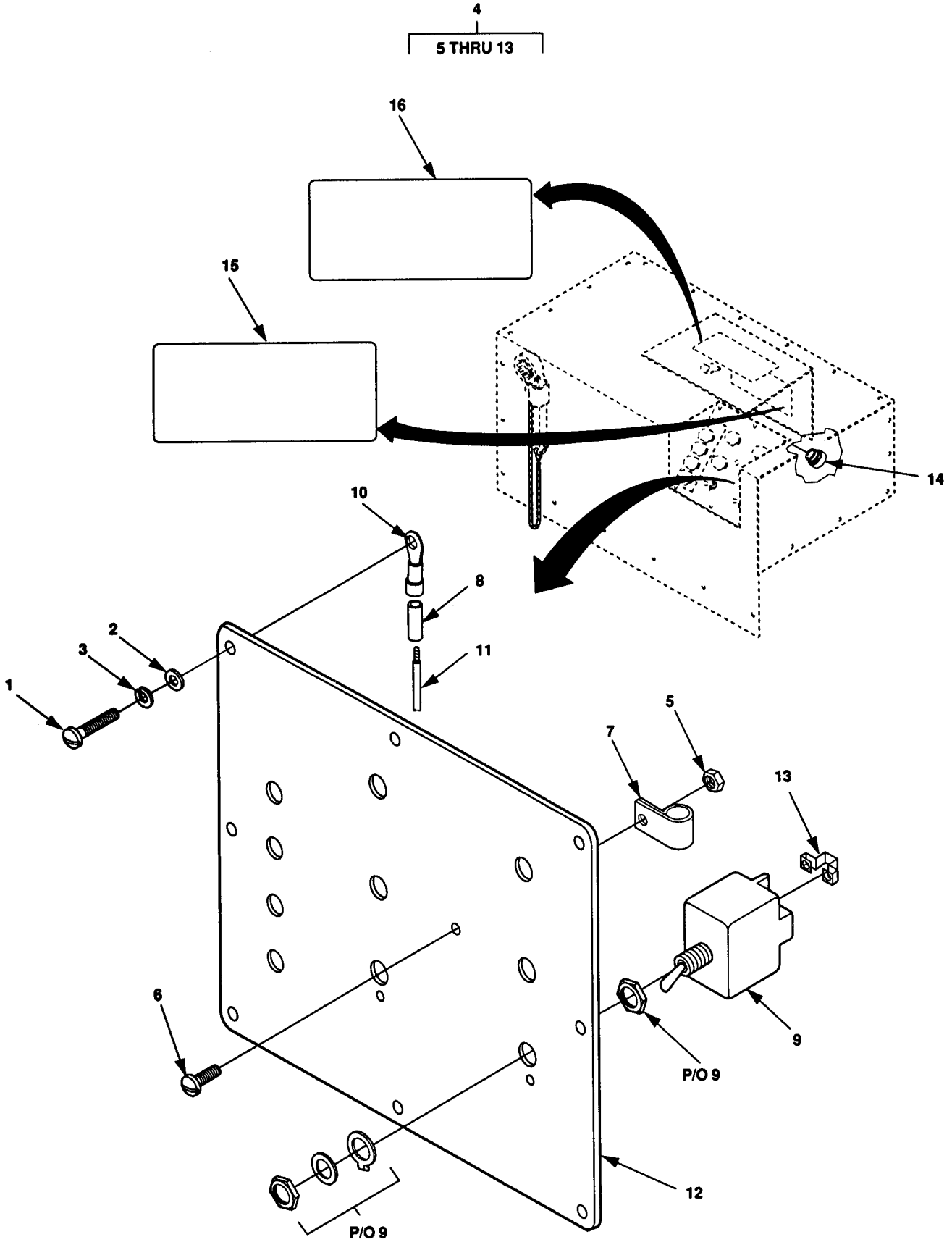

Figure F-5. Control Panel Assembly

(1) ITEM NO	(2) SMR CODE	(3) CAGEC	(4) PART NUMBER	(5) DESCRIPTION AND USABLE ON CODES (UOC)	(6) QTY
				GROUP 02 ELECTRICAL SYSTEM	
				FIG. 5 CONTROL PANEL ASSEMBLY	
1	PAOZZ	96906	MS51957-45	..SCREW,MACHINE UOC:EVX	8
2	PAOZZ	96906	MS15795-807	..WASHER,FLAT UOC:EVX	8
3	PAOZZ	96906	MS35338-137	..WASHER,LOCK UOC:EVX	8
4	XDFFF	97403	13229E5802	..CONTROL PANEL ASSY UOC:EVX	1
5	PAOZZ	96906	MS21044C08	...NUT,SELF-LOCKING,HE UOC:EVX	1
6	PAOZZ	96906	MS24693-C52	...SCREW,MACHINE UOC:EVX	1
7	PAOZZ	96906	MS21322-33	...CLAMP,LOOP UOC:EVX	1
8	MOOZZ	19099	13229E5802-4	...INSULATION SLEEVING MAKE FROM P/N M23053/5-107-9 (81349) .75 IN. REQUIRED UOC:EVX	16
9	PAOZZ	96906	MS27407-3	...SWITCH,TOGGLE UOC:EVX	2
10	PAOZZ	96906	MS25036-153	...TERMINAL,LUG UOC:EVX	1
11	MOOZZ	19099	13229E5802-10	...WIRE,ELECTRICAL MAKE FROM P/N M22759/16-16-9 (81349),16AWG AS REQUIRED UOC:EVX	1
12	XDOZZ	97403	13229E5805	...PANEL,CONTROL UOC:EVX	1
13	PAOZZ	81349	TBJA	...BUS,CONDUCTOR UOC:EVX	2
14	PAOZZ	81349	M45938/1-13C	..NUT,PLAIN,CLINCH UOC:EVX	8
15	MDOZZ	97403	13229E5793-1	..LABEL,INSTRUCTION OPERATING PROCEDURES UOC:EVX	1
16	MDOZZ	97403	13229E5793-2	..LABEL,INSTRUCTION LOAD TRANSFER PROCEDURES UOC:EVX	1

END OF FIGURE

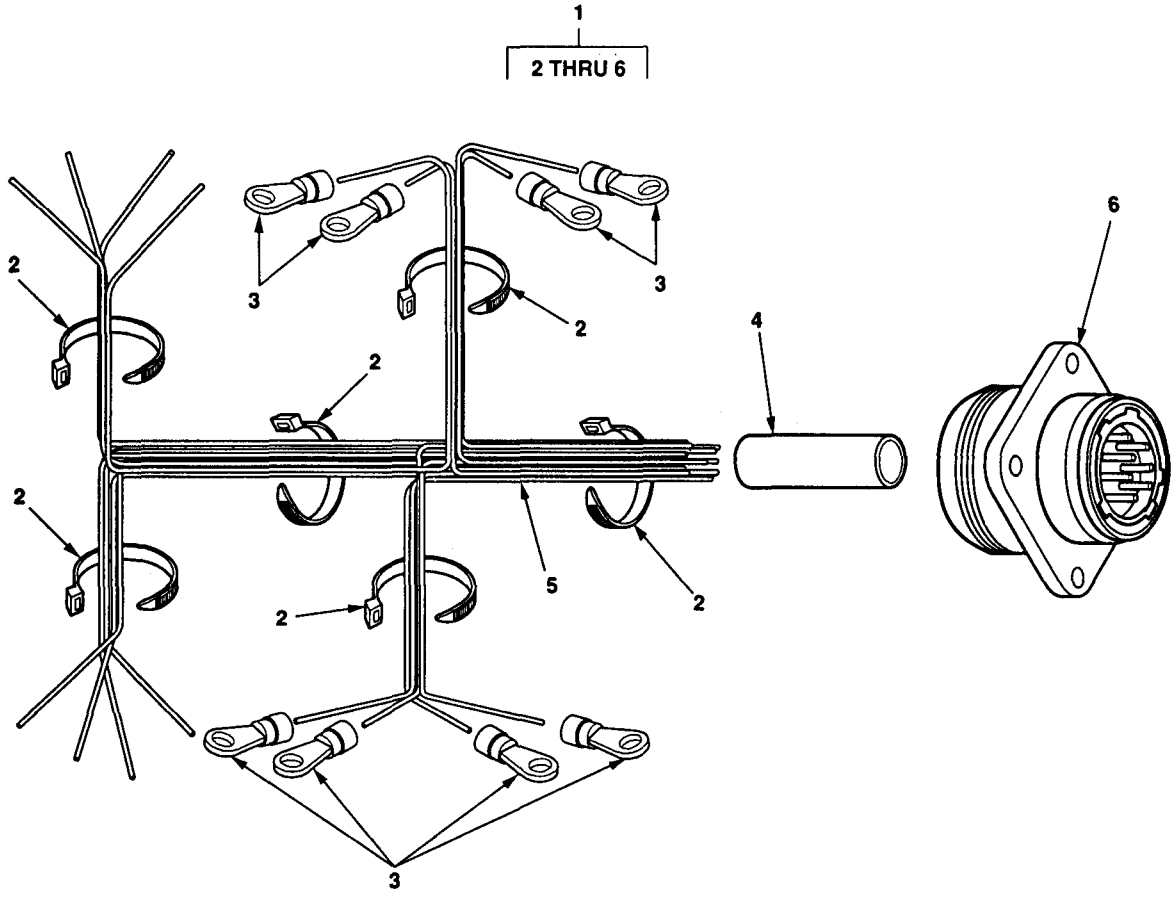

WIRE LIST					
WIRE NO.	TERMINATION		TERMINATION		WIRE ITEM NO.
	FROM	ITEM NO.	TO.	ITEM NO.	
1	XDS1-1	—	P3-A	6	5
2	XDS1-2	—	P3-B	6	5
3	XDS3-2	—	P3-C	6	5
4	S1-3	3	P3-D	6	5
5	S1-5	3	P3-F	6	5
6	S1-6	3	P3-G	6	5
7	S2-6	3	P3-H	6	5
8	S2-5	3	P3-I	6	5
9	S2-3	3	P3-K	6	5
10	XDS4-2	—	P3-L	6	5
11	XDS2-1	—	P3-M	6	5
12	XDS2-2	—	P3-N	6	5
13	XDS3-1	—	S1-3	3	5
14	XDS4-1	—	S2-3	3	5

Figure F-6. Control Panel Wiring Harness, W20

(1) ITEM NO	(2) SMR CODE	(3) CAGEC	(4) PART NUMBER	(5) DESCRIPTION AND USABLE ON CODES (UOC)	(6) QTY
				GROUP 02 ELECTRICAL SYSTEM	
				FIG. 6 CONTROL PANEL WIRING HARNESS, W20	
1	XDFFF	97403	13229E5837	...HARNESS ASSY,CONTRO UOC:EVX	1
2	PAOZZ	96906	MS3367-1-9	....STRAP,TIEDOWN,ELECT UOC:EVX	V
3	PAOZZ	96906	MS25036-101	....TERMINAL, LUG UOC:EVX	8
4	MOOZZ	19099	13229E5837-3	....INSULATION SLEEVING MAKE FROM P/N M23053/5-107-9 (81349) 2.5 IN. REQUIRED RED UOC:EVX	1
5	MFFZZ	19099	13229E5837-2	....WIRE,ELECTRICAL MAKE FROM P/N M22759/16-20-9 (81349) AS REQUIRED UOC:EVX	1
6	PAFZZ	96906	MS3106R20-27P	....CONNECTOR,PLUG,ELEC UOC:EVX	1
				END OF FIGURE	

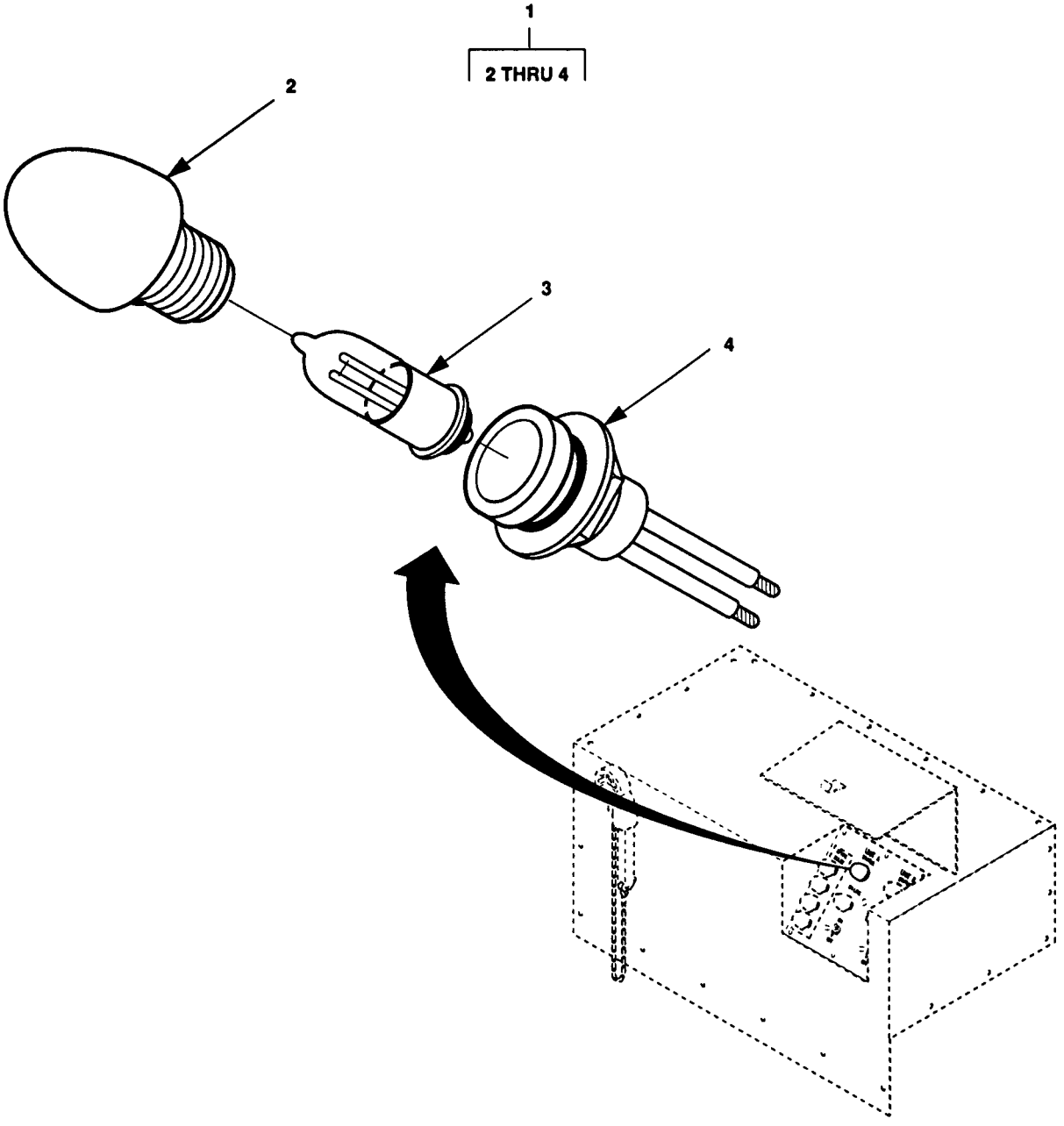

Figure F-7. Lamp Holder

(1) ITEM NO	(2) SMR CODE	(3) CAGEC	(4) PART NUMBER	(5) DESCRIPTION AND USABLE ON CODES (UOC)	(6) QTY
				GROUP 02 ELECTRICAL SYSTEM	
				FIG. 7 LAMP HOLDER	
1	PAOZZ	97403	13214E1391	...LIGHT,INDICATOR UOC:EVX	8
2	XDOZZ	72619	181-0931-001	....LENS,CLEAR UOC:EVX	1
3	PAOZZ	58224	G9B (GR)	....LAMP UOC:EVX	1
4	PAOZZ	72619	181-8836-09-553	....LIGHT,INDICATOR UOC:EVX	1
				END OF FIGURE	

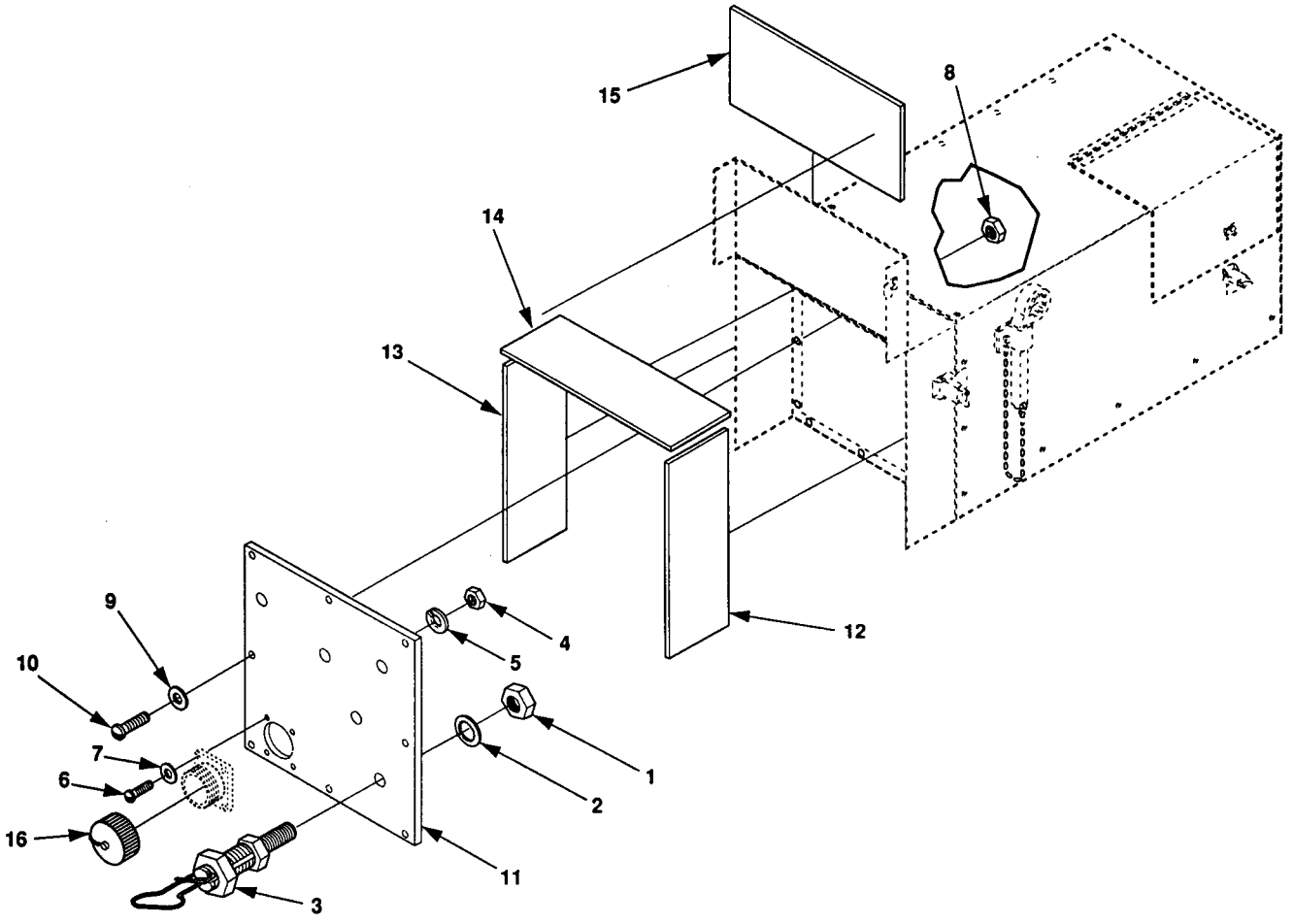

Figure F-8. Load Terminals

(1) ITEM NO	(2) SMR CODE	(3) CAGEC	(4) PART NUMBER	(5) DESCRIPTION AND USABLE ON CODES (UOC)	(6) QTY
				GROUP 02 ELECTRICAL SYSTEM	
				FIG. 8 LOAD TERMINALS	
1	PAOZZ	96906	MS35691-35	..NUT,PLAIN,HEXAGON UOC:EVX	9
2	PAOZZ	96906	MS35333-113	..WASHER,LOCK UOC:EVX	5
3	PAOZZ	96906	MS39347-4	..TERMINAL,LOAD UOC:EVX	5
4	PAFZZ	96906	MS35650-302	..NUT,PLAIN,HEXAGON UOC:EVX	8
5	PAFZZ	96906	MS51415-3	..WASHER,LOCK UOC:EVX	8
6	PAFZZ	96906	MS35207-267	..SCREW,MACHINE UOC:EVX	8
7	PAFZZ	96906	MS51412-21	..WASHER,FLAT UOC:EVX	8
8	PAOZZ	96906	MS51858-4	..NUT,PLAIN,HEXAGON UOC:EVX	11
9	PAOZZ	96906	MS51859-4	..WASHER,FLAT UOC:EVX	11
10	PAOZZ	96906	MS51957-46	..SCREW,MACHINE UOC:EVX	11
11	XDOZZ	97403	13229E5807-1	..PLATE,LOAD TERMINAL UOC:EVX	1
12	MFFZZ	19099	13229E5795-1-67	..SHEET,PLASTIC MAKE FROM P/N M24768/2-S-7 (81349) 12.50 X 2.125 ..INCHES REQUIRED UOC:EVX	1
13	MFFZZ	19099	13229E5795-1-68	..SHEET,PLASTIC MAKE FROM P/N M24768/2-S-7 (81349) 11.38 X 3.75 INCHES REQUIRED UOC:EVX	1
14	MFFZZ	19099	13229E5795-1-69	..SHEET,PLASTIC MAKE FROM P/N M24768/2-S-7 (81349) 3.75 X 12.50 INCHES REQUIRED UOC:EVX	1
15	MFFZZ	19099	13229E5795-1-70	..SHEET,PLASTIC MAKE FROM P/N M24768/2-S-7 (81349) 11.38 X 7.38 INCHES REQUIRED UOC:EVX	1
16	PAFZZ	96906	MS90563-3C	...COVER,ELECTRICAL CO UOC:EVX	1
				END OF FIGURE	

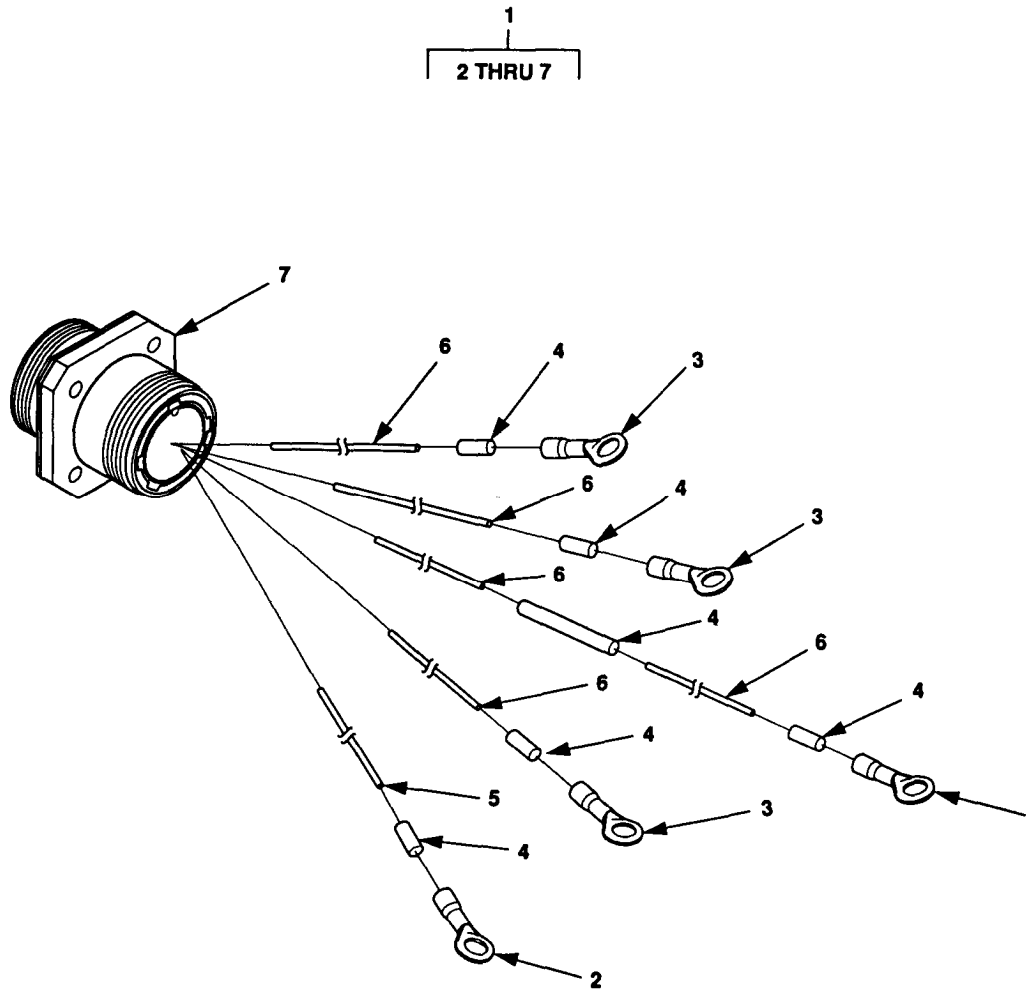

WIRE LIST					
WIRE NO.	TERMINATION		TERMINATION		WIRE ITEM NO.
	FROM	ITEM NO.	TO.	ITEM NO.	
1	J1-A	7	L1	3	6
2	J1-B	7	L2	3	6
3	J1-C	7	L3	3	6
4	J1-N	7	L0	3	6
5	J1-G	7	GND	2	5

Figure F-9. Wiring Harness, W9

(1) ITEM NO	(2) SMR CODE	(3) CAGEC	(4) PART NUMBER	(5) DESCRIPTION AND USABLE ON CODES (UOC)	(6) QTY
				GROUP 02 ELECTRICAL SYSTEM	
				FIG. 9 WIRING HARNESS, W9	
1	XDFFF	97403	13229E5808-1	..WIRING HARNESS UOC:EVX	1
2	PAFZZ	96906	MS25036-120	...TERMINAL,LUG UOC:EVX	1
3	PAFZZ	96906	MS20659-145	...TERMINAL,LUG UOC:EVX	4
4	MFFZZ	19099	13229E5808-1-8	...INSULATION SLEEVING MAKE FROM M23053/5-108-4 (81349) 2.50 INCHES REQUIRED UOC:EVX	6
5	MFFZZ	19099	13229E5808-1-4	...WIRE,ELECTRICAL MAKE FROM P/N M5086/2-6-9 (81349) 8.00 INCHES REQUIRED UOC:EVX	1
6	MFFZZ	19099	13229E5808-1-3	...WIRE,ELECTRICAL MAKE FROM P/N M5086/2-4-9 (81349) AS REQUIRED UOC:EVX	4
7	PAFZZ	96906	MS90555C32413SY	...CONNECTOR,RECEPTACL UOC:EVX	1

END OF FIGURE

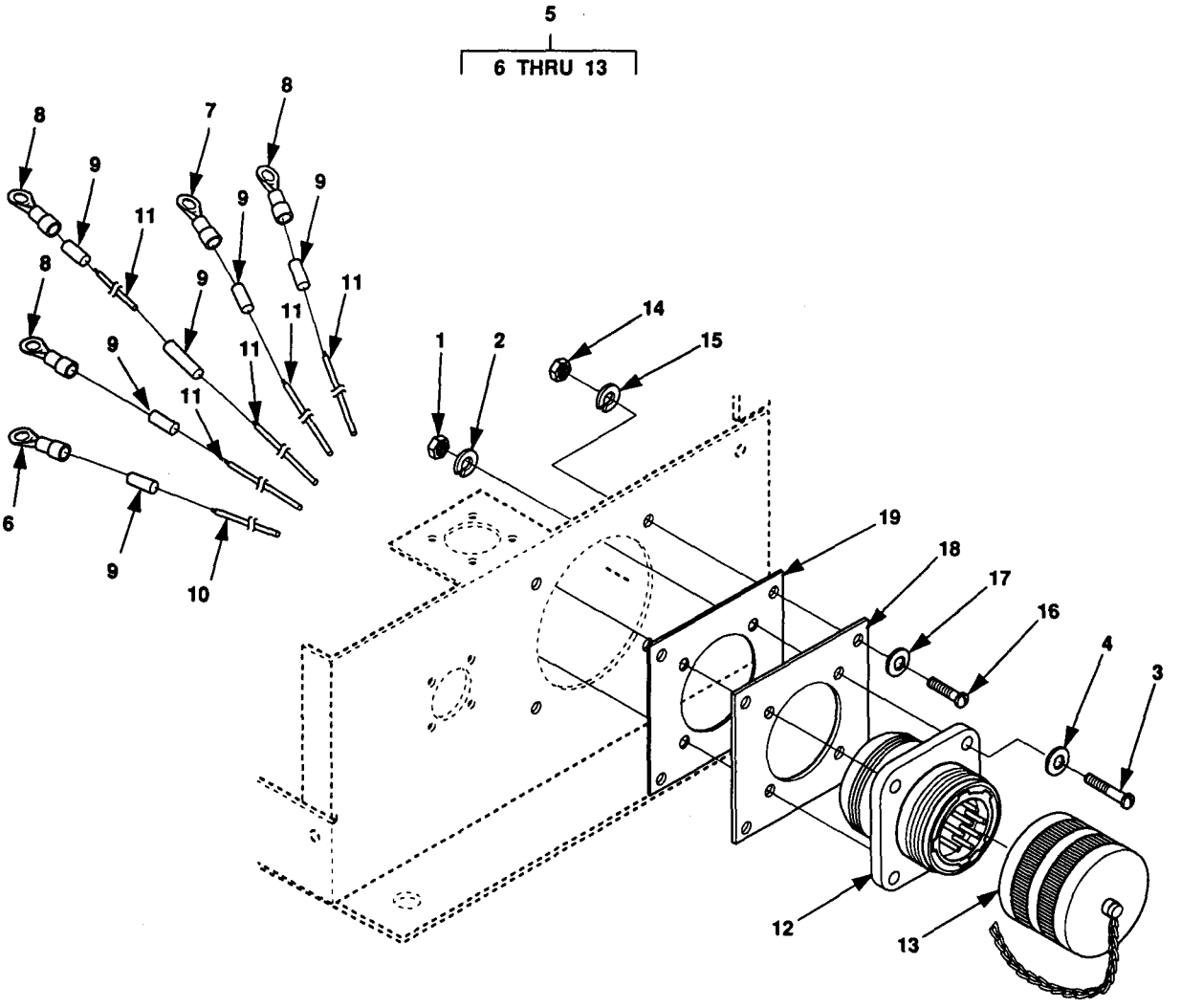

WIRE LIST					
WIRE NO.	TERMINATION		TERMINATION		WIRE ITEM NO.
	FROM	ITEM NO.	TO.	ITEM NO.	
1	J2-A	12	K2-A1	8	11
2	J2-B	12	K2-B1	8	11
3	J2-C	12	K2-C1	8	11
4	J2-N	12	L0	7	11
5	J2-G	12	GND	6	10

Figure F-10. Wiring Harness, W10

(1) ITEM NO	(2) SMR CODE	(3) CAGEC	(4) PART NUMBER	(5) DESCRIPTION AND USABLE ON CODES (UOC)	(6) QTY
				GROUP 02 ELECTRICAL SYSTEM	
				FIG. 10 WIRING HARNESS,W10	
1	PAOZZ	96906	MS35650-302	..NUT,PLAIN,HEXAGON UOC:EVX	4
2	PAOZZ	96906	MS51415-3	..WASHER,LOCK UOC:EVX	4
3	PAOZZ	96906	MS35207-267	..SCREW,MACHINE UOC:EVX	4
4	PAOZZ	96906	MS51412-21	..WASHER,FLAT UOC:EVX	4
5	XDFFF	97403	13229E5808-2	..WIRING HARNESS UOC:EVX	1
6	PAFZZ	96906	MS25036-120	...TERMINAL,LUG UOC:EVX	1
7	PAFZZ	96906	MS20659-145	...TERMINAL,LUG UOC:EVX	1
8	PAFZZ	96906	MS25036-125	...TERMINAL,LUG UOC:EVX	3
9	MFFZZ	19099	13229E5808-2-8	...INSULATION SLEEVING MAKE FROM P/N M23053/5-108-4 (81349) 2.5 IN. REQUIRED UOC:EVX	6
10	MFFZZ	19099	13229E5808-2-4	...WIRE,ELECTRICAL MAKE FROM P/N M5086/2-6-9 (81349) AS REQUIRED UOC:EVX	1
11	MFFZZ	19099	13229E5808-2-3	...WIRE,ELECTRICAL MAKE FROM P/N M5086/2-4-9 (81349) AS REQUIRED UOC:EVX	4
12	PAFZZ	96906	MS90558C32413PY	...CONNECTOR,RECEPTACL UOC:EVX	1
13	PAFZZ	96906	MS90564-3C	...COVER,ELECTRICAL CO UOC:EVX	1
14	PAFZZ	96906	MS35650-3254	..NUT,PLAIN,HEXAGON UOC:EVX	4
15	PAFZZ	96906	MS35338-139	..WASHER,LOCK UOC:EVX	4
16	PAFZZ	96906	MS35308-306	..SCREW,CAP,HEXAGON H UOC:EVX	4
17	PAFZZ	96906	MS15795-852	..WASHER,FLAT UOC:EVX	4
18	XDFZZ	97403	13229E5788-1	..PLATE,CONNECTOR HOU UOC:EVX	1
19	XDFZZ	97403	13229E5815	..GASKET,CONNECTOR PL UOC:EVX	1
				END OF FIGURE	

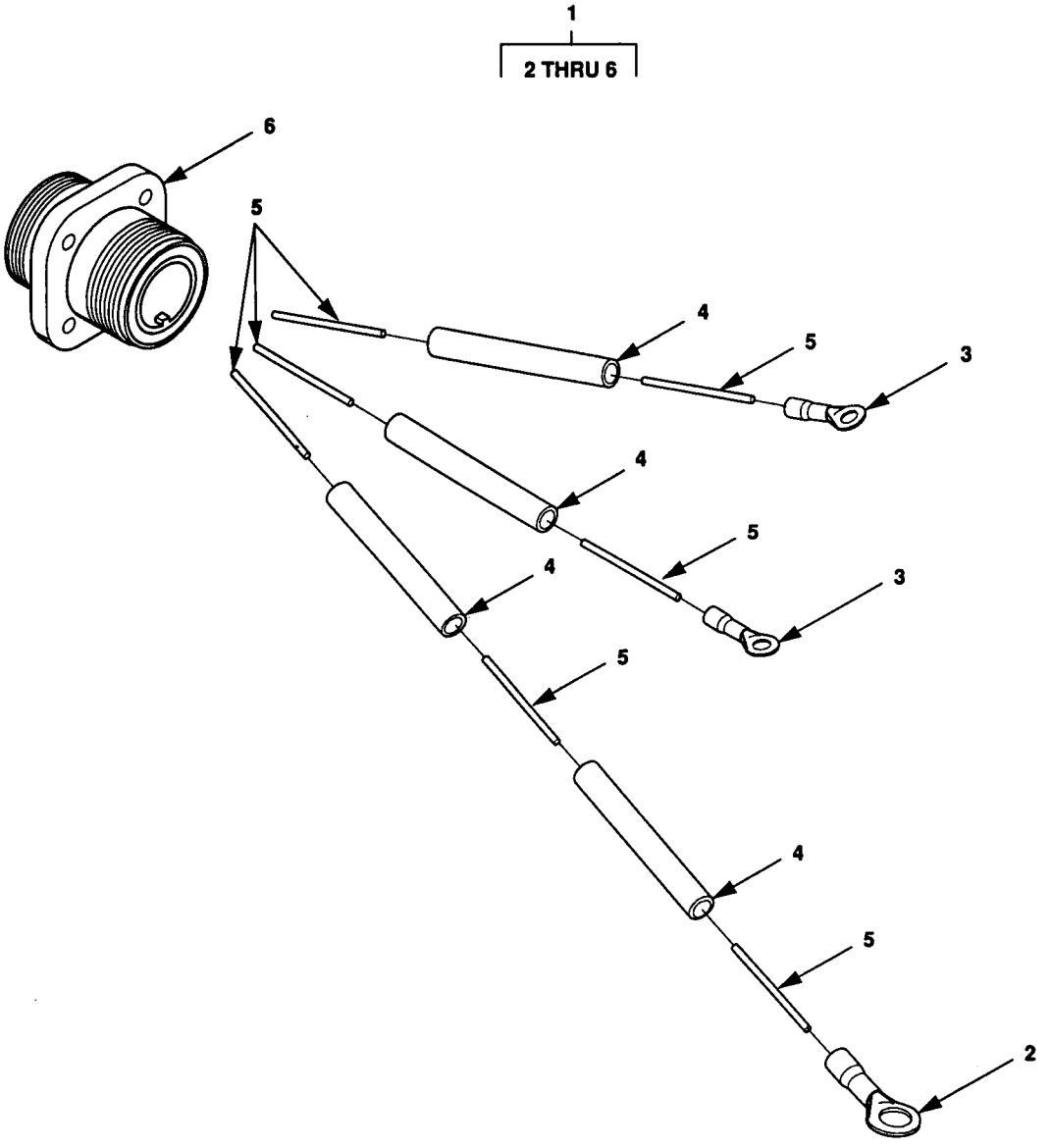

WIRE LIST					
WIRE NO.	TERMINATION		TERMINATION		WIRE ITEM NO.
	FROM	ITEM NO.	TO.	ITEM NO.	
1	J3-A	6	K2-12	3	5
2	J3-B	6	K2-Y	3	5
3	J3-E	6	GND	2	5

Figure F-11. Wiring Harness, W17

(1) ITEM NO	(2) SMR CODE	(3) CAGEC	(4) PART NUMBER	(5) DESCRIPTION AND USABLE ON CODES (UOC)	(6) QTY
				GROUP 02 ELECTRICAL SYSTEM	
				FIG. 11 WIRING HARNESS, W17	
1	XDFFF	97403	13229E5806-1	..WIRING HARNESS POWER,SWITCH BOX UOC:EVX	1
2	PAFZZ	96906	MS25036-154	...TERMINAL,LUG UOC:EVX	1
3	PAFZZ	96906	MS25036-107	...TERMINAL,LUG UOC:EVX	2
4	MFFZZ	19099	13229E5806-1-5	...INSULATION SLEEVING MAKE FROM P/N M23053/5-104-4 (81349) 2 IN. REQUIRED UOC:EVX	4
5	MFFZZ	19099	13229E5806-1-2	...WIRE,ELECTRICAL MAKE FROM P/N M22759/16-16-9 (81349) AS REQUIRED UOC:EVX	3
6	PAFZZ	96906	MS3102R18-11P	...CONNECTOR,RECEPTACL UOC:EVX	1
				END OF FIGURE	

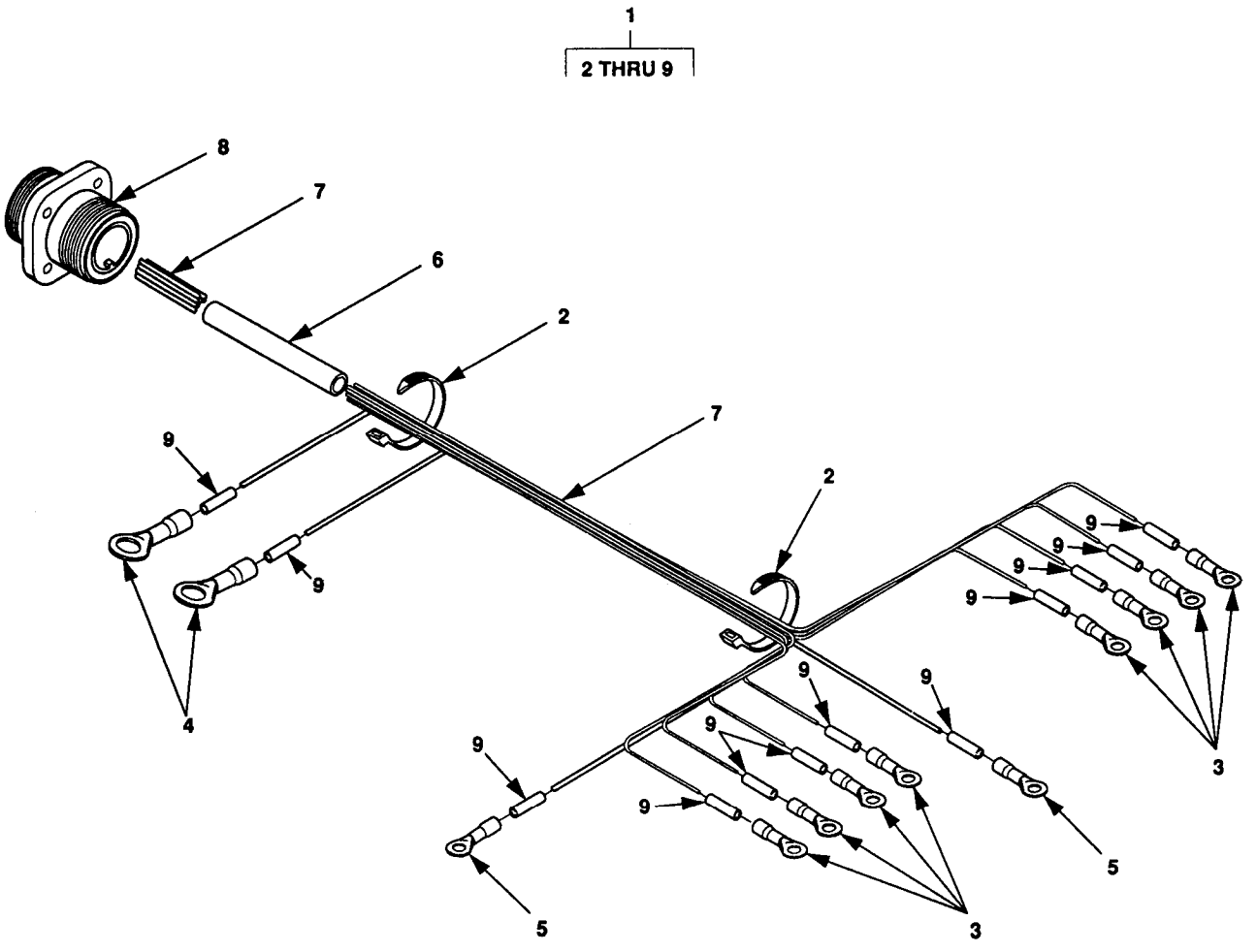

WIRE LIST					
WIRE NO.	TERMINATION		TERMINATION		WIRE ITEM NO.
	FROM	ITEM NO.	TO.	ITEM NO.	
1	J4-A	8	K1-A1	5	7
2	J4-B	8	L0	4	7
3	J4-C	8	K1-Y	3	7
4	J4-D	8	K1-X	3	7
5	J4-F	8	K1-11	3	7
6	J4-G	8	K1-12	3	7
7	J4-H	8	K2-12	3	7
8	J4-I	8	K2-11	3	7
9	J4-K	8	K2-X	3	7
10	J4-L	8	K2-Y	3	7
11	J4-M	8	K2-A1	5	7
12	J4-N	8	L0	4	—

Figure F-12. Wiring Harness, W7

(1) ITEM NO	(2) SMR CODE	(3) CAGEC	(4) PART NUMBER	(5) DESCRIPTION AND USABLE ON CODES (UOC)	(6) QTY
				GROUP 02 ELECTRICAL SYSTEM	
				FIG. 12 WIRING HARNESS, W7	
1	XDFFF	97403	13229E5800-1	..WIRING HARNESS CONTROL UOC:EVX	1
2	PAFZZ	96906	MS3367-1-9	...STRAP,TIEDOWN,ELECT UOC:EVX	V
3	PAFZZ	96906	MS25036-106	...TERMINAL,LUG UOC:EVX	8
4	PAFZZ	96906	MS25036-155	...TERMINAL,LUG UOC:EVX	2
5	PAFZZ	96906	MS25036-110	...TERMINAL,LUG UOC:EVX	2
6	MFFZZ	19099	13229E5800-1-6	...INSULATION SLEEVING MAKE FROM P/N M23053/5-108-4 (81349) 2.5 INCHES REQUIR UOC:EVX	1
7	MFFZZ	19099	13229E5800-1-2	...WIRE,ELECTRICAL MAKE FROM P/N M22759/16-16-9 (81349) AS REQUIRED UOC:EVX	1
8	PAFZZ	96906	MS3100R20-27S	...CONNECTOR,RECEPTACL UOC:EVX	1
9	MFFZZ	19099	13229E5800-1-10	...INSULATION SLEEVING MAKE FROM P/N M23053/5-105-4 (81349),AS REQUIRED UOC:EVW,EVX	12

END OF FIGURE

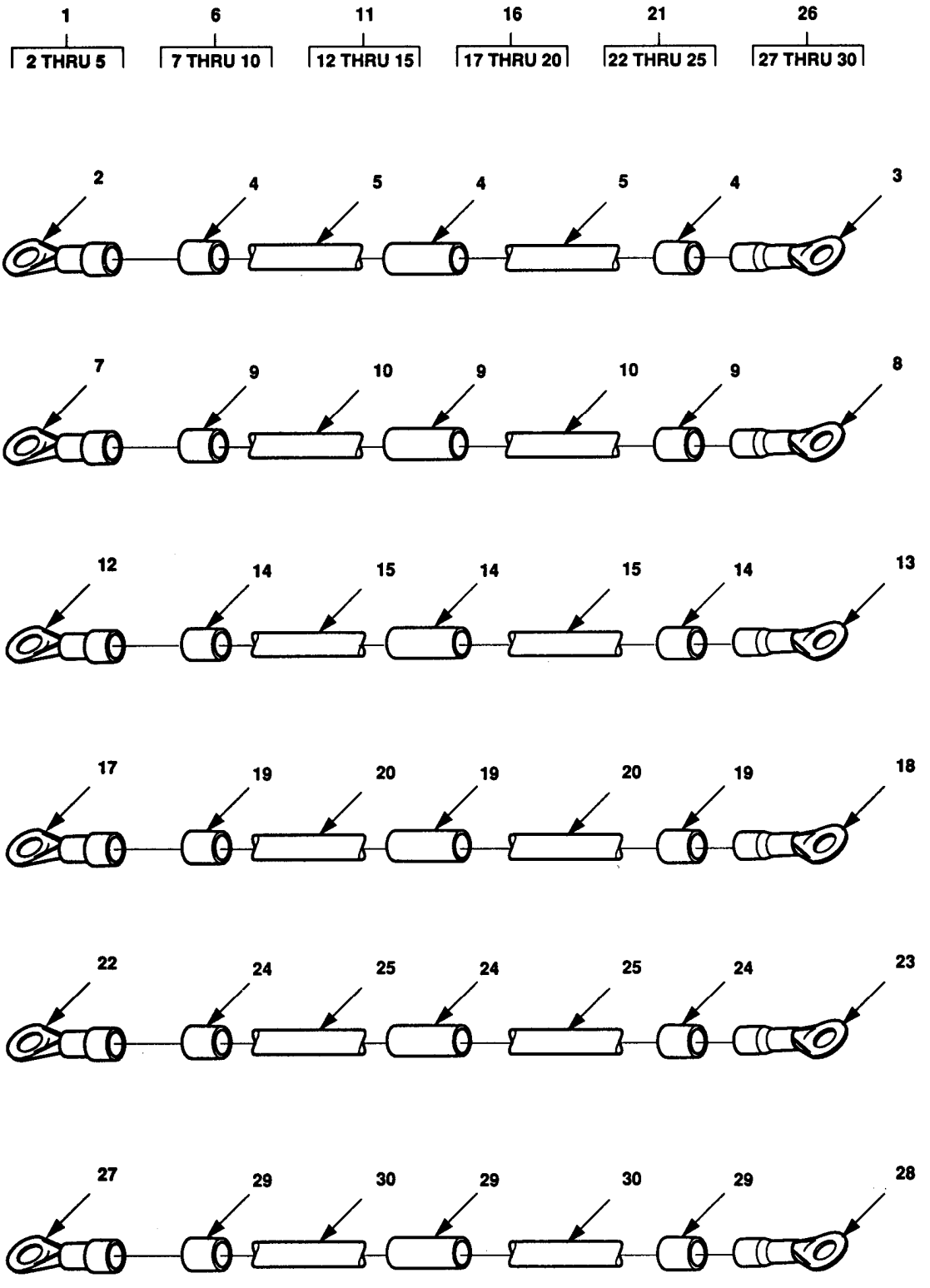

Figure F-13. Electrical Lead

(1) ITEM NO	(2) SMR CODE	(3) CAGEC	(4) PART NUMBER	(5) DESCRIPTION AND USABLE ON CODES (UOC)	(6) QTY
				GROUP 02 ELECTRICAL SYSTEM	
				FIG. 13 ELECTRICAL LEADS	
1	AFFFF	97403	13229E5810-3	..LEAD,ELECTRICAL UOC:EVX	1
2	PAFZZ	96906	MS20659-145	...TERMINAL,LUG STUD SIZE .500 INCHES UOC:EVX	1
3	PAFZZ	96906	MS25036-125	...TERMINAL,LUG STUD SIZE .375 INCHES UOC:EVX	1
4	MFFZZ	19099	13229E5810-3-10	...INSULATION SLEEVING MAKE FROM P/N M23053/5-105-4 (81349) AS REQUIRED UOC:EVX	1
5	MFFZZ	19099	13229E5810-3-1	...WIRE,ELECTRICAL MAKE FROM P/N M5086/2-4-9 (81349) 12.5 IN. REQUIRED UOC:EVX	1
6	AFFFF	97403	13229E5810-2	..LEAD,ELECTRICAL UOC:EVX	1
7	PAFZZ	96906	MS20659-145	...TERMINAL,LUG STUD SIZE .500 INCHES UOC:EVX	1
8	PAFZZ	96906	MS25036-125	...TERMINAL,LUG STUD SIZE .375 INCHES UOC:EVX	1
9	MFFZZ	19099	13229E5810-2-1	...WIRE,ELECTRICAL MAKE FROM P/N M5086/2-4-9 (81349) 12.50 INCHES REQUIRED UOC:EVX	1
10	MFFZZ	97403	13229E5810-2-10	...INSULATION SLEEVING MAKE FROM P/N M23053/5-105-4 (81349) AS REQUIRED UOC:EVX	1
11	AFFFF	97403	13229E5810-1	..LEAD,ELECTRICAL UOC:EVX	1
12	PAFZZ	96906	MS20659-145	...TERMINAL,LUG STUD SIZE .500 INCHES UOC:EVX	1
13	PAFZZ	96906	MS25036-125	...TERMINAL,LUG .375 STUD SIZE UOC:EVX	1
14	MFFZZ	19099	13229E5810-1-1	...WIRE,ELECTRICAL MAKE FROM P/N M5086/2-4-9 (81349) 12.5 IN. REQUIRED UOC:EVX	1
15	MFFZZ	97403	13229E5810-1-10	...INSULATION SLEEVING MAKE FROM P/N M23053/5-105-4 (81349) AS REQUIRED UOC:EVX	1
16	AFFFF	97403	13229E5810-11	..LEAD,ELECTRICAL UOC:EVX	1
17	PAFZZ	96906	MS20659-145	...TERMINAL,LUG STUD SIZE .500 INCHES	1

(1) ITEM NO	(2) SMR CODE	(3) CAGEC	(4) PART NUMBER	(5) DESCRIPTION AND USABLE ON CODES (UOC)	(6) QTY
				UOC:EVX	
18	PAFZZ	96906	MS25036-125	...TERMINAL,LUG STUD SIZE .375 INCHES UOC:EVX	1
19	MFFZZ	19099	13229E5810-11-1	...WIRE,ELECTRICAL MAKE FROM P/N M5086/2-4-9 (81349) 15.5 IN. REQUIRED UOC:EVX	1
20	MFFZZ	97403	13229E5810-11-10	...INSULATION SLEEVING MAKE FROM P/N M23053/5-105-4 (81349) AS REQUIRED UOC:EVX	1
21	AFFFF	97403	13229E5810-12	..LEAD,ELECTRICAL UOC:EVX	1
22	PAFZZ	96906	MS20659-145	...TERMINAL,LUG STUD SIZE .500 INCHES UOC:EVX	1
23	PAFZZ	96906	MS25036-125	...TERMINAL,LUG STUD SIZE .375 INCHES UOC:EVX	1
24	MFFZZ	19099	13229E5810-12-1	...WIRE,ELECTRICAL MAKE FROM P/N M5086/2-4-9 (81349) 15.5 IN. REQUIRED UOC:EVX	1
25	MFFZZ	97403	13229E5810-12-10	...INSULATION SLEEVING MAKE FROM P/N M23053/5-105-4 (81349) AS REQUIRED UOC:EVX	1
26	AFFFF	97403	13229E5810-13	..LEAD,ELECTRICAL UOC:EVX	1
27	PAFZZ	96906	MS20659-145	...TERMINAL,LUG STUD SIZE .500 INCHES UOC:EVX	1
28	PAFZZ	96906	MS25036-125	...TERMINAL,LUG STUD SIZE .375 INCHES UOC:EVX	1
29	MFFZZ	19099	13229E5810-13-1	...WIRE,ELECTRICAL MAKE FROM P/N M5086/2-4-9 (81349) 15.5 IN. REQUIRED UOC:EVX	1
30	MFFZZ	97403	13229E5810-13-10	...INSULATION SLEEVING MAKE FROM P/N M23053/5-105-4 (81349) AS REQUIRED UOC:EVX	1

END OF FIGURE

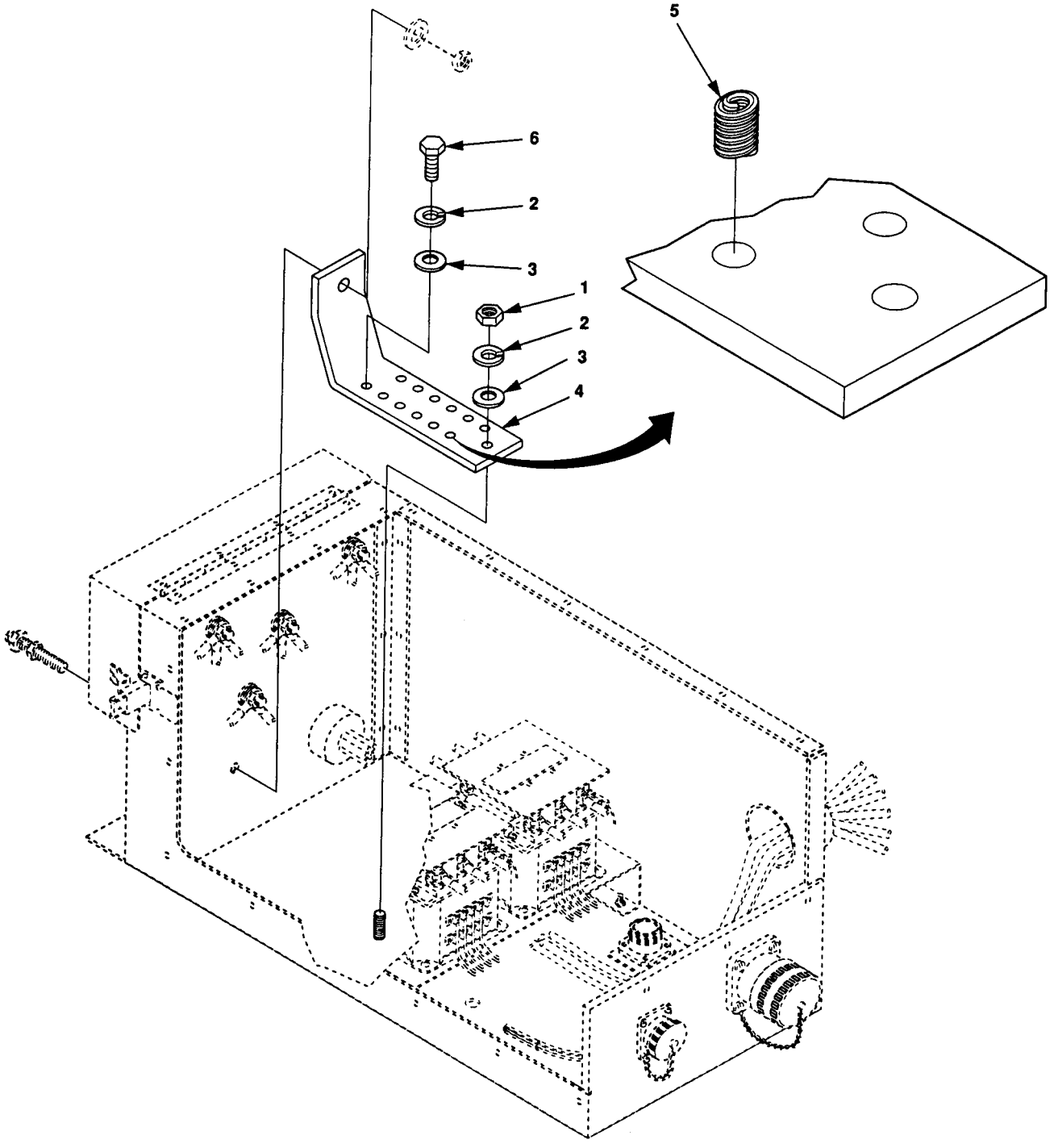

Figure F-14. Bus Bar

(1) ITEM NO	(2) SMR CODE	(3) CAGEC	(4) PART NUMBER	(5) DESCRIPTION AND USABLE ON CODES (UOC)	(6) QTY
				GROUP 02 ELECTRICAL SYSTEM	
				FIG. 14 BUS BAR	
1	PAFZZ	96906	MS35649-2254	..NUT,PLAIN,HEXAGON UOC:EVX	1
2	PAFZZ	96906	MS35338-139	..WASHER,LOCK UOC:EVX	6
3	PAFZZ	96906	MS15795-852	..WASHER,FLAT UOC:EVX	6
4	XDFFF	97403	13229E5816-1	..BUS BAR,GROUNDING UOC:EVX	1
5	PAFZZ	96906	MS124696	...INSERT,SCREW THREAD .250-28, .375 NOM LENGTH UOC:EVX	12
6	PAFZZ	96906	MS35308-3	..SCREW,CAP,HEXAGON H UOC:EVX	5
				END OF FIGURE	

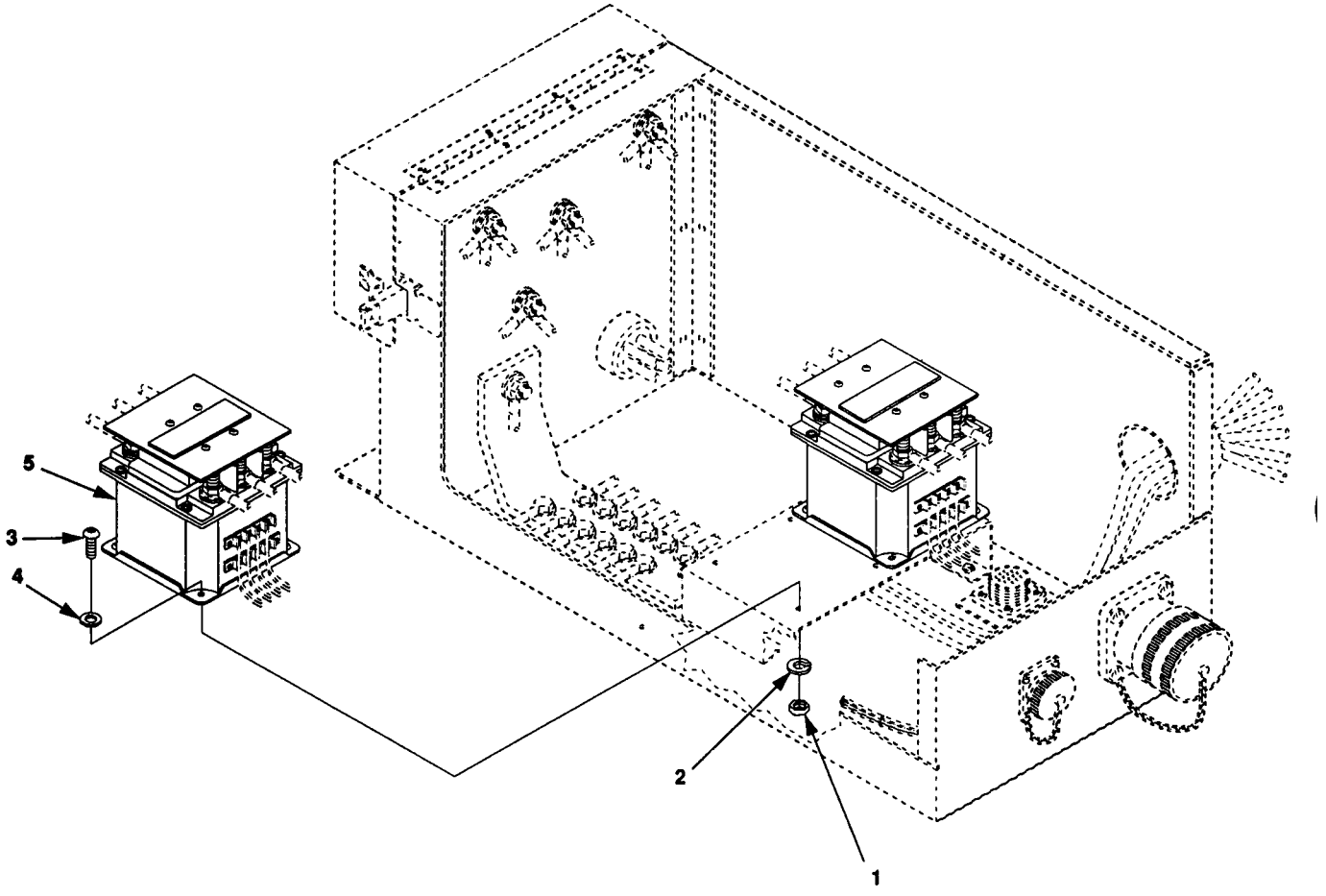

Figure F-15. Contactor

(1) ITEM NO	(2) SMR CODE	(3) CAGEC	(4) PART NUMBER	(5) DESCRIPTION AND USABLE ON CODES (UOC)	(6) QTY
				GROUP 02 ELECTRICAL SYSTEM	
				FIG. 15 CONTACTOR	
1	PAFZZ	96906	MS35649-204	..NUT,PLAIN,HEXAGON UOC:EVX	8
2	PAFZZ	96906	MS35338-138	..WASHER,LOCK UOC:EVX	8
3	PAFZZ	96906	MS51958-64	..SCREW,MACHINE UOC:EVX	8
4	PAFZZ	96906	MS15795-857	..WASHER,FLAT UOC:EVX	8
5	PAFZZ	7E656	JCG-6026	..CONTACTOR UOC:EVX	2
				END OF FIGURE	

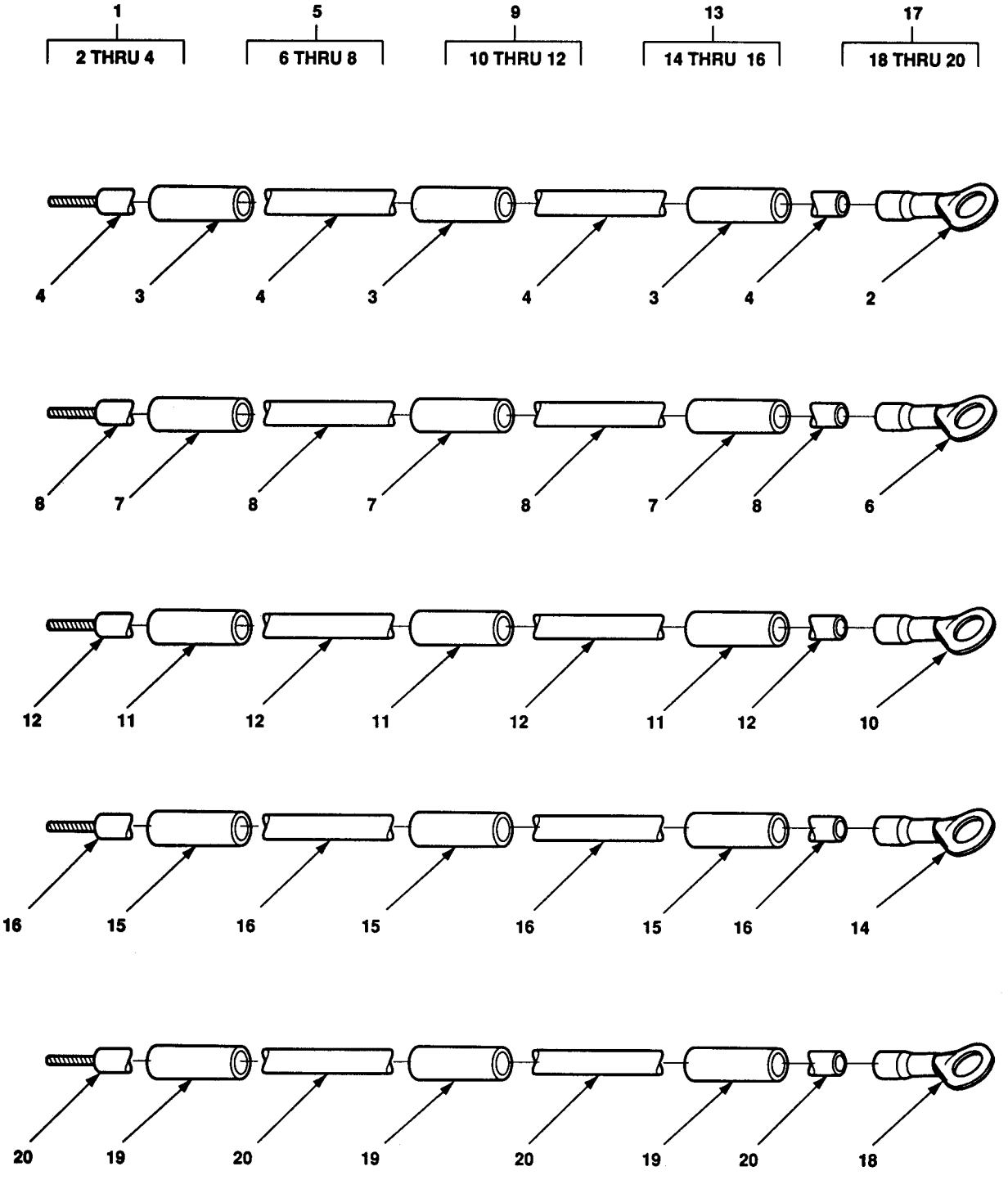

Figure F-16. Power Lead

(1) ITEM NO	(2) SMR CODE	(3) CAGEC	(4) PART NUMBER	(5) DESCRIPTION AND USABLE ON CODES (UOC)	(6) QTY
				GROUP 02 ELECTRICAL SYSTEM	
				FIG. 16 POWER LEAD	
1	AFFFF	97403	13229E5811-1	.LEAD,ELECTRICAL UOC:EVX	1
2	PAFZZ	96906	MS25036-125	..TERMINAL,LUG STUD SIZE .375 INCHES UOC:EVX	1
3	MFFZZ	19099	13229E5811-1-4	..INSULATION SLEEVING MAKE FROM P/N M23053/5-108-4 (81349) 2.5 IN. REQUIRED UOC:EVX	3
4	MFFZZ	19099	13229E5811-1-1	..WIRE,ELECTRICAL MAKE FROM P/N M5086/2-4-9 (81349) 54 IN REQUIRED UOC:EVX	1
5	AFFFF	97403	13229E5811-2	.LEAD,ELECTRICAL UOC:EVX	1
6	PAFZZ	96906	MS25036-125	..TERMINAL,LUG STUD SIZE .375 INCHES UOC:EVX	1
7	MFFZZ	19099	13229E5811-2-4	..INSULATION SLEEVING MAKE FROM P/N M23053/5-108-4 (81349) 2.5 IN REQUIRED UOC:EVX	3
8	MFFZZ	19099	13229E5811-2-1	..WIRE,ELECTRICAL MAKE FROM P/N M5086/2-4-9 (81349) 59 IN. REQUIRED UOC:EVX	1
9	AFFFF	97403	13229E5811-3	.LEAD,ELECTRICAL UOC:EVX	1
10	PAFZZ	96906	MS25036-125	..TERMINAL,LUG STUD SIZE .375 INCHES UOC:EVX	1
11	MFFZZ	19099	13229E5811-3-4	..INSULATION SLEEVING MAKE FROM P/N M23053/5-108-4 (81349) 2.5 IN. REQUIRED UOC:EVX	3
12	MFFZZ	19099	13229E5811-3-1	..WIRE,ELECTRICAL MAKE FROM M5086 2-4-9 (81349) 64.00 INCHES REQUIRED UOC:EVX	1
13	AFFFF	97403	13229E5811-4	.LEAD,ELECTRICAL UOC:EVX	1
14	PAFZZ	96906	MS20659-145	..TERMINAL,LUG STUD SIZE .500 INCHES UOC:EVX	1
15	MFFZZ	19099	13229E5811-4-4	..INSULATION SLEEVING MAKE FROM M23053/5-108-9 (81349) 2.5 IN. REQUIRED UOC:EVX	3
16	MFFZZ	19099	13229E5811-4-1	..WIRE,ELECTRICAL MAKE FROM P/N M5086/2-4-9 (81349) 45 IN. REQUIRED UOC:EVX	1

(1) ITEM NO	(2) SMR CODE	(3) CAGEC	(4) PART NUMBER	(5) DESCRIPTION AND USABLE ON CODES (UOC)	(6) QTY
17	AFFFF	97403	13229E5811-5	.LEAD,ELECTRICAL UOC:EVX	1
18	PAFZZ	96906	MS25036-123	..TERMINAL,LUG STUD SIZE .250 INCHES UOC:EVX	1
19	MFFZZ	19099	13229E5811-5-4	..INSULATION SLEEVING MAKE FROM M23053/5-108-9 (81349) 2.50 INCHES REQUIRED UOC:EVX	3
20	MFFZZ	19099	13229E5811-5-1	..WIRE,ELECTRICAL MAKE FROM P/N M5086/2-4-9 (81349) 37 IN. REQUIRED UOC:EVX	1

END OF FIGURE

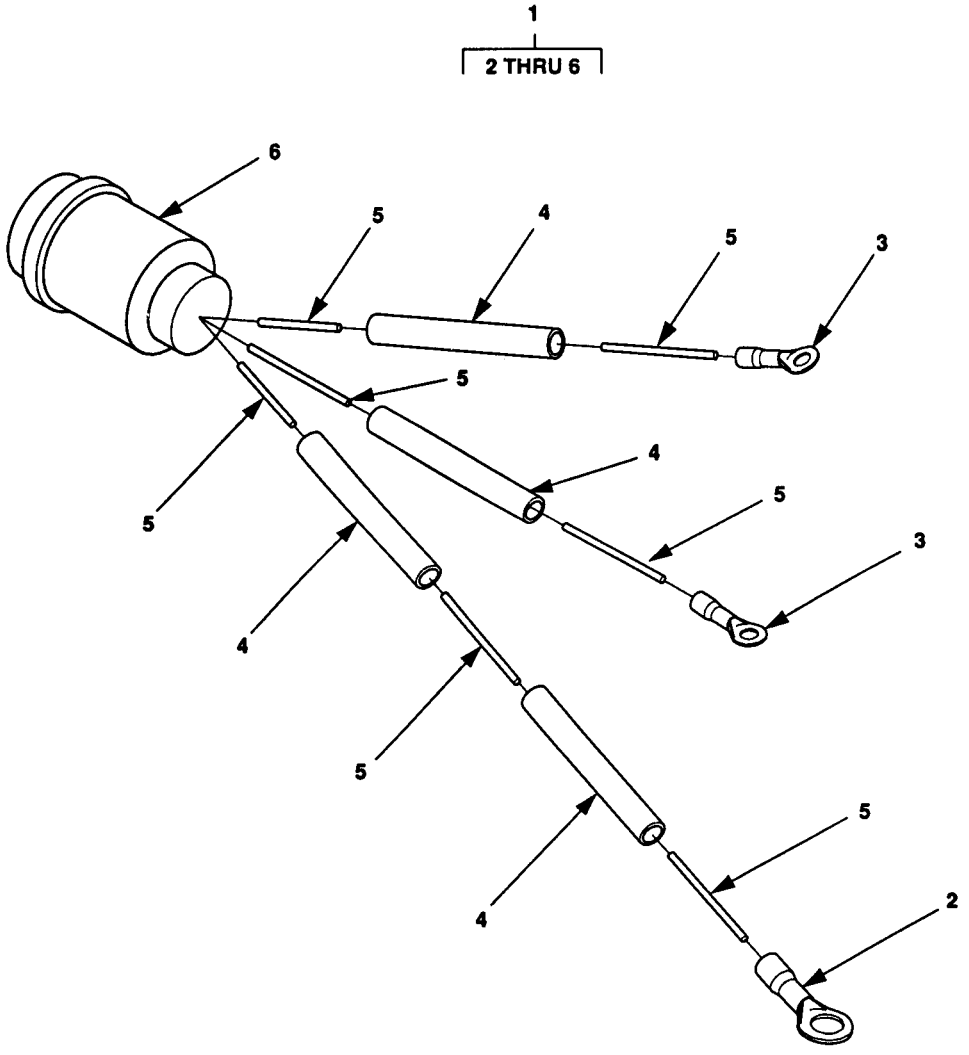

WIRE LIST					
WIRE NO.	TERMINATION		TERMINATION		WIRE ITEM NO.
	FROM	ITEM NO.	TO.	ITEM NO.	
1	P1-A	6	K1-12	3	5
2	P1-B	6	K1-Y	3	5
3	P1-E	6	GND	2	5

Figure F-17. Power Switch Wiring Harness, W18

(1) ITEM NO	(2) SMR CODE	(3) CAGEC	(4) PART NUMBER	(5) DESCRIPTION AND USABLE ON CODES (UOC)	(6) QTY
				GROUP 02 ELECTRICAL SYSTEM	
				FIG. 17 POWER SWITCH WIRING HARNESS, W18	
1	XDFFF	97403	13226E5806-2	.WIRING HARNESS POWER SWITCH BOX UOC:EVX	1
2	PAFZZ	96906	MS25036-154	..TERMINAL,LUG UOC:EVX	1
3	PAFZZ	96906	MS25036-107	..TERMINAL,LUG UOC:EVX	2
4	MFFZZ	19099	13229E5806-2-5	..INSULATION SLEEVING MAKE FROM P/N M23053/5-104-4 (81349) 2.00 INCHES REQUIRED UOC:EVX	4
5	MFFZZ	19099	13229E5806-2-2	..WIRE,ELECTRICAL MAKE FROM P/N M22759/16-16-9 (81349) AS REQUIRED UOC:EVX	3
6	PAFZZ	96906	MS3456W18-11S	..CONNECTOR,PLUG,ELEC UOC:EVX	1
				END OF FIGURE	

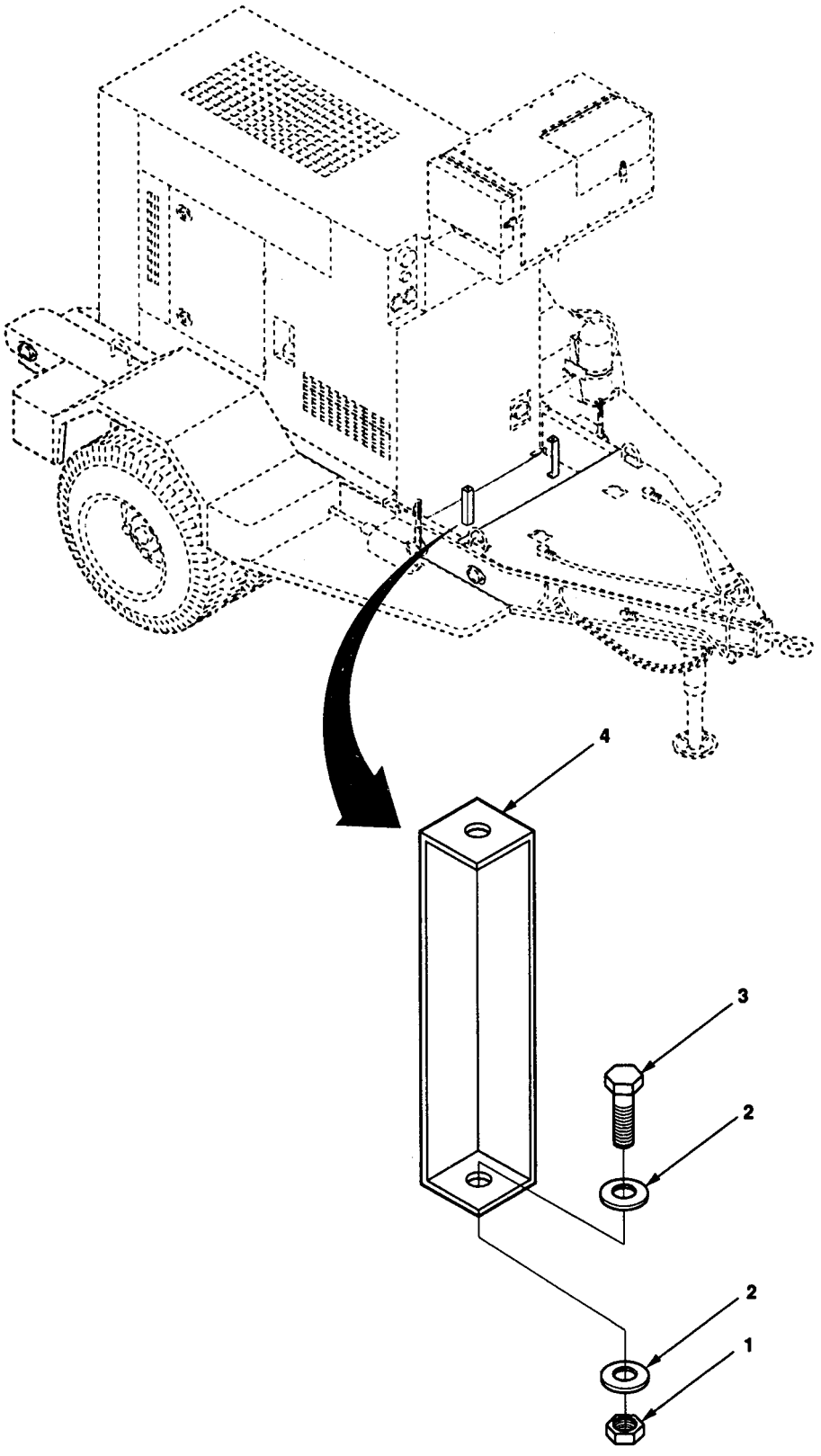

Figure F-18. Switch Box Support

(1) ITEM NO	(2) SMR CODE	(3) CAGEC	(4) PART NUMBER	(5) DESCRIPTION AND USABLE ON CODES (UOC)	(6) QTY
				GROUP 02 ELECTRICAL SYSTEM	
				FIG. 18 SWITCH BOX SUPPORT	
1	PAFZZ	96906	MS35649-2382	.NUT,PLAIN,HEXAGON VOC:EVX	2
2	PAFZZ	96906	MS51412-27	.WASHER,FLAT UOC:EVX	4
3	PAFZZ	80204	B1821BH038C138N	.SCREW,CAP,HEXAGON H UOC:EVX	2
4	XDFZZ	97403	13230E4592	.SUPPORT,SWITCH BOX UOC:EVX	2
				END OF FIGURE	

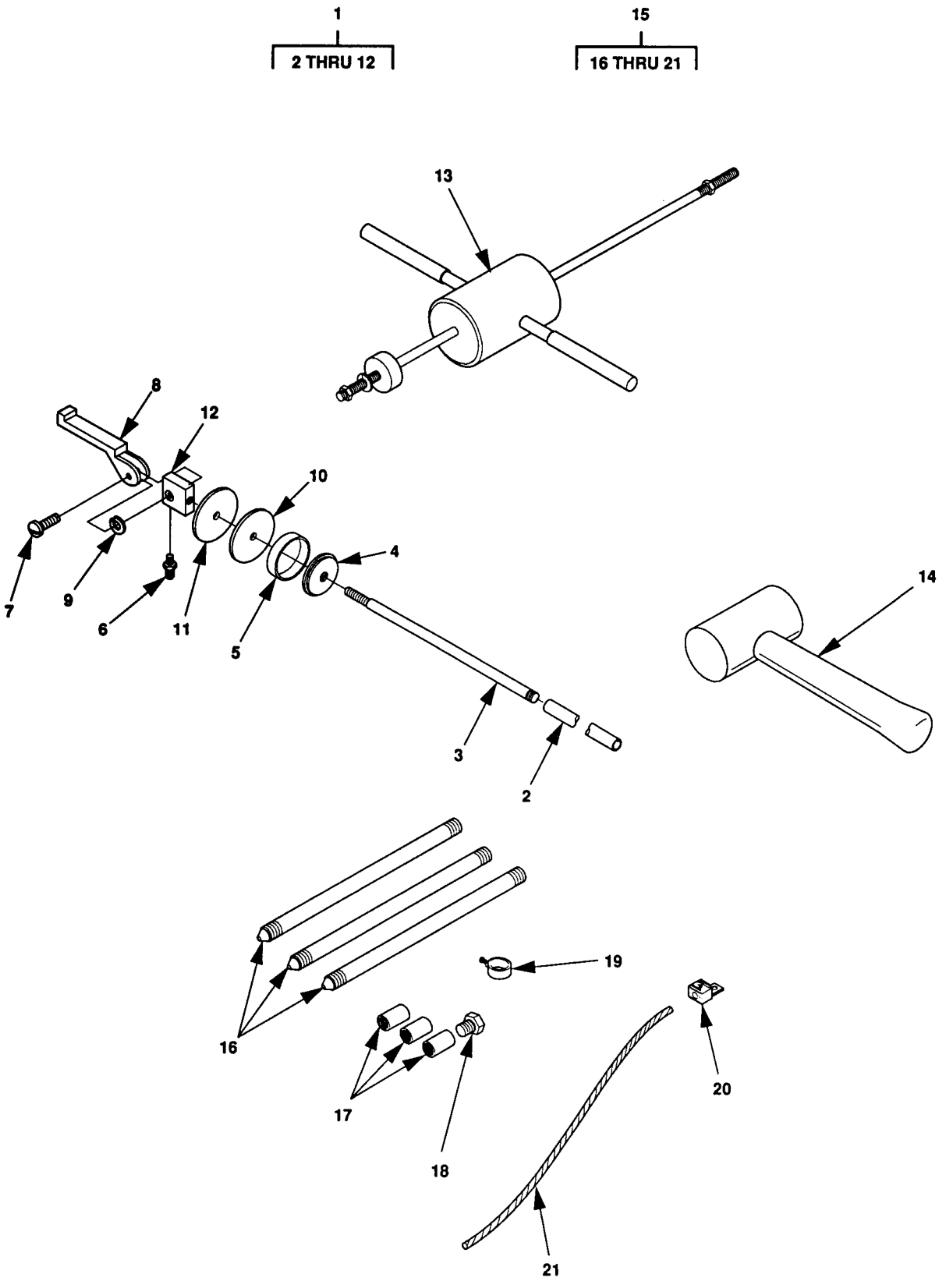

Figure F-19. Accessories

(1) ITEM NO	(2) SMR CODE	(3) CAGEC	(4) PART NUMBER	(5) DESCRIPTION AND USABLE ON CODES (UOC)	(6) QTY
				GROUP 03 ACCESSORIES	
				FIG.19 ACCESSORIES	
1	PAOOO	06076	13211E7541	.ADAPTER,CONTAINER UOC:ESV,EVV,EVW,FMG	1
2	PAOZZ	97403	13211E7542	..PIPE,METALLIC UOC:ESV,EVV,EVW,FMG	1
3	PAOZZ	97403	13211E7543	..PIPE,METALLIC UOC:ESV,EVV,EVW,FMG	1
4	XAOZZ	97403	13211E7544	..WASHER,RECESSED UOC:ESV,EVV,EVW,FMG	1
5	PAOZZ	97403	13211E7546	..GASKET UOC:ESV,EVV,EVW,FMG	1
6	PAOZZ	88044	AN816-5-4	..ADAPTER,STRAIGHT,PI UOC:ESV,EVV,EVW,FMG	1
7	PAOZZ	00141	4328	..SCREW,SHOULDER UOC:ESV,EVV,EVW,FMG	2
8	XAOZZ	97403	13200E6363	..CLAMP,STRAINER UOC:ESV,EVV,EVW,FMG	1
9	PAOZZ	96906	MS35335-60	..WASHER,LOCK UOC:ESV,EVV,EVW,FMG	2
10	XAOZZ	97403	13211E7547	..WASHER,FLAT UOC:ESV,EVV,EVW,FMG	1
11	XAOZZ	97403	13200E6361	..WASHER,FLAT UOC:ESV,EVV,EVW,FMG	1
12	XA0ZZ	97403	13211E7548	..HEAD UOC:ESV,EVV,EVW,FMG	1
13	PAOZZ	45225	P74-144	.SLIDE HAMMER,GROUND UOC:ESV,EVV,EVW,FMG	1
14	PAOZZ	81348	GGG-H-86 TY10CL1	.HAMMER,HAND UOC:ESV,EVV,EVW,FMG	1
15	PAOOO	15277	FS0216B122-1	.ROD,GROUND WITH ATTACHMENTS UOC:ESV,EVV,EVW,FMG	2
16	PAOZZ	56681	HLP1053A	..ROD,GROUND UOC:ESV,EVV,EVW,FMG	3
17	PAOZZ	73616	GRC 58	..COUPLING,GROUND ROD UOC:ESV,EVV,EVW,FMG	3
18	PAOZZ	73616	GRB58	..DRIVE HEAD UOC:ESV,EVV,EVW,FMG	1
19	PAOZZ	04655	70-801074	..CLAMP,ELECTRICAL UOC:ESV,EVV,EVW,FMG	1
20	PAOZZ	01667	CBA-70	..TERMINAL,LUG UOC:ESV,EVV,EVW,FMG	1
21	MOOZZ	81348	QQW343C06B1B	..WIRE,ELECTRICAL MAKE AS REQUIRED UOC:ESV,EVV,EVW,FMG	1
				END OF FIGURE	

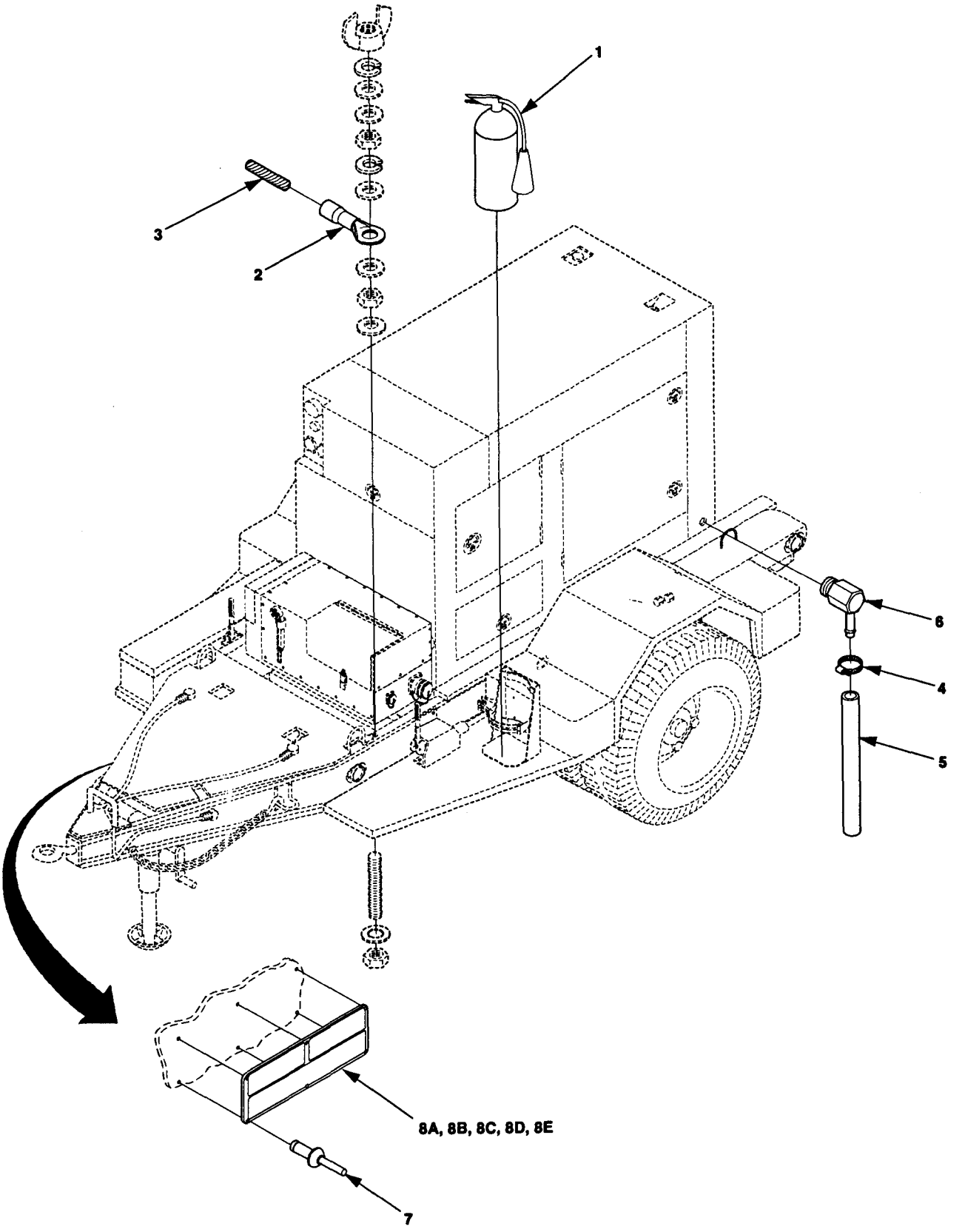

Figure F-20. Oil Drain, Fire Extinguisher and Ground Cable (Sheet 1 of 2).

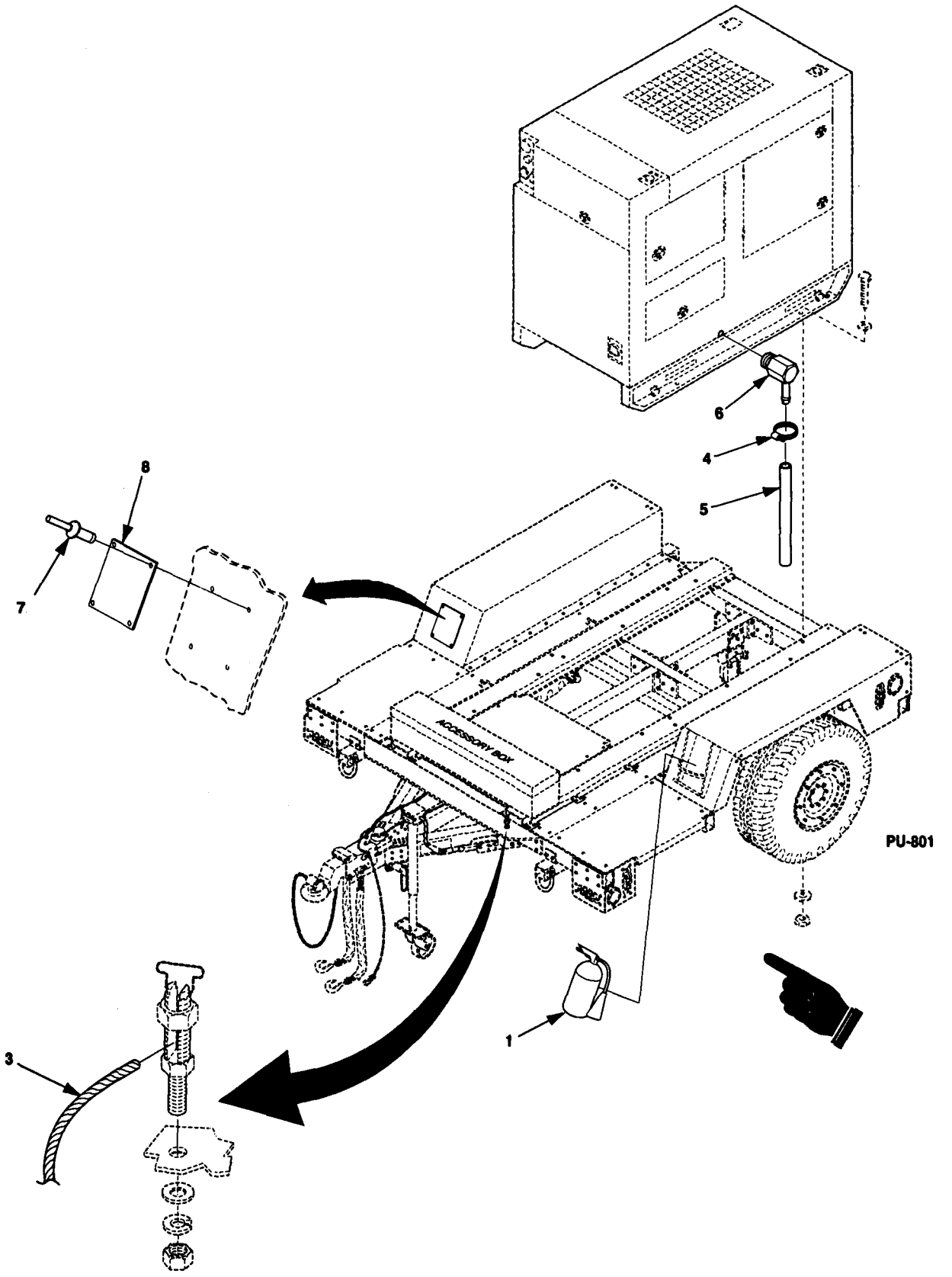

Figure F-20. Oil Drain, Fire Extinguisher and Ground Cable (Sheet 2 of 2).

(1) ITEM NO	(2) SMR CODE	(3) CAGEC	(4) PART NUMBER	(5) DESCRIPTION AND USABLE ON CODES (UOC)	(6) QTY
				GROUP 03 ACCESSORIES	
				FIG.20 OIL DRAIN,FIRE EXTINGUISHER AND GROUND CABLE	
1	PAOZZ	58536	A-A-1106	.EXTINGUISHER,FIRE UOC:ESV,EVV,EVW,FMG	1
2	PAOZZ	96906	MS25036-122	.TERMINAL,LUG UOC:ESV,EVV,EVW	1
3	MOOZZ	81348	QQW343CO6B1B	.WIRE,ELECTRICAL MAKE AS REQUIRED UOC:ESV,EVV,EVW,FMG	1
4	PAOZZ	96906	MS35842-11	.CLAMP,HOSE UOC:ESV,EVV,EVW,FMG	1
5	MOOZZ	81349	M6000F00200	.HOSE,RUBBER MAKE AS REQUIRED UOC:ESV,EVV,EVW,FMG	1
6	PAOZZ	96906	MS24519-9	.ELBOW,PIPE TO HOSE UOC:ESV,EVV,EVW,FMG	1
7	PAOZZ	81349	M24243/1-B604	.RIVET,BLIND UOC:ESV,EVV,EVW	6
7	PAOZZ	07707	AD45ABS	.RIVET,BLIND UOC:FMG	4
8	MDOZZ	30554	13230E6551	.PLATE,SHIPPING DATA/IDENTIFICATION UOC:FMG	1
8	MDOZZ	97403	13229E5666-6	.PLATE,IDENTIFICATIO TRANSPORTATION DATA PLATE,UNIT A W/ SWITCH BOX UOC:EVX	1
8	MDOZZ	97403	13229E5666-16	.PLATE,IDENTIFICATIO TRANSPORTATION DATA PLATE UOC:EVW	1
8	MDOZZ	97403	13229E5666-18	.PLATE,IDENTIFICATIO TRANSPORTATION DATA PLATE UOC:ESV	1
8	MDOZZ	97403	13229E5666-17	.PLATE,IDENTIFICATIO TRANSPORTATION DATA PLATE UOC:EVV	1
8	MDOZZ	97403	13229E5666-5	.PLATE,IDENTIFICATIO TRANSPORTATION DATA PLATE,UNIT B W/ O SWITCH BOX VOC:EVX	1
				END OF FIGURE	

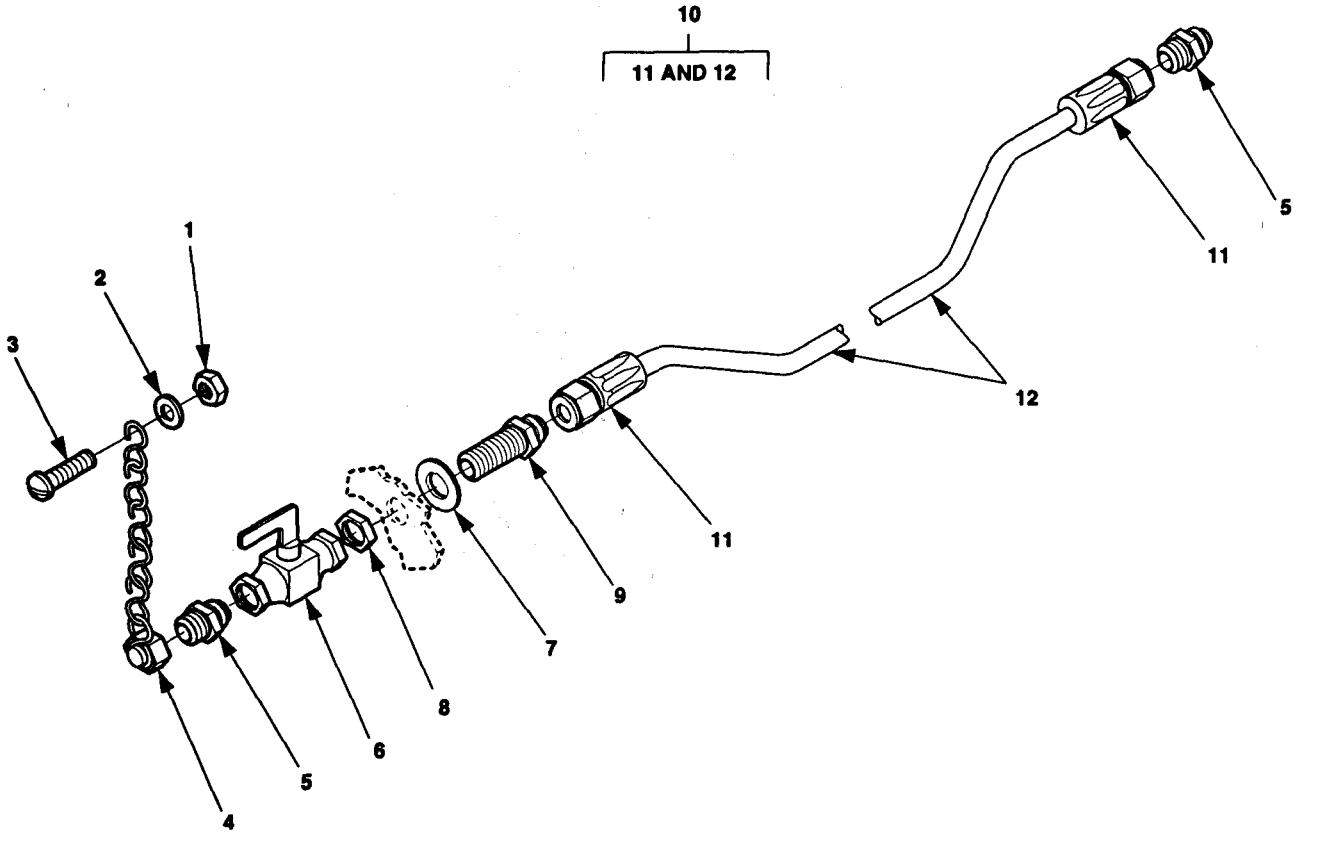

Figure F-21. Fuel Assembly Drain.

(1) ITEM NO	(2) SMR CODE	(3) CAGEC	(4) PART NUMBER	(5) DESCRIPTION AND USABLE ON CODES (UOC)	(6) QTY
				GROUP 03 ACCESSORIES	
				FIG 21 FUEL ASSEMBLY REPAIR	
1	PAOZZ	96906	MS51922-1	. NUT, SELF-LOCKING, HE ..... UOC:ESV, EVW	1
2	PAOZZ	96906	MS15795-852	. WASHER, FLAT ..... UOC:ESV, EVW	2
3	PAOZZ	96906	MS35206-283	. SCREW, MACHINE ..... UOC:ESV, EVW	1
4	PAOZZ	93742	69-539-2	. CAP, TUBE ..... UOC:ESV, EVW	1
5	PAOZZ	96906	MS51519-B5/A5	. NIPPLE, TUBE..... UOC:ESV, EVW	1
6	PAOZZ	96906	MS35930-2	. COCK, PLUG ..... UOC:ESV, EVW	1
7	PAOZZ	96906	MS51860-54	. LOCKNUT, TUBE FITTIN ..... UOC:ESV.EVW	1
8	PAFZZ	96906	MS27183-17	. WASHER, FLAT ..... UOC:ESV, EVW	1
9	PAFZZ	96906	MS51520A5Z	. NIPPLE, TUBE..... UOC:ESV, EVW	1
10	AFFFF	96906	MS52103A050400R	. HOSE ASSEMBLY..... UOC:ESV, EVW	1
11	PAFZZ	96906	MS24587-5	. . ADAPTEER, STRAIGHT, TU ..... UOC:ESV, EVW	2
12	MFFZZ	19099	MS52103-2	. . HOSE, NONMETALLIC MAKE FROM P/N FC173-5 (01276) 40 INCHES REQUIRED ..... UOC:ESV, EVW	1

END OF FIGURE

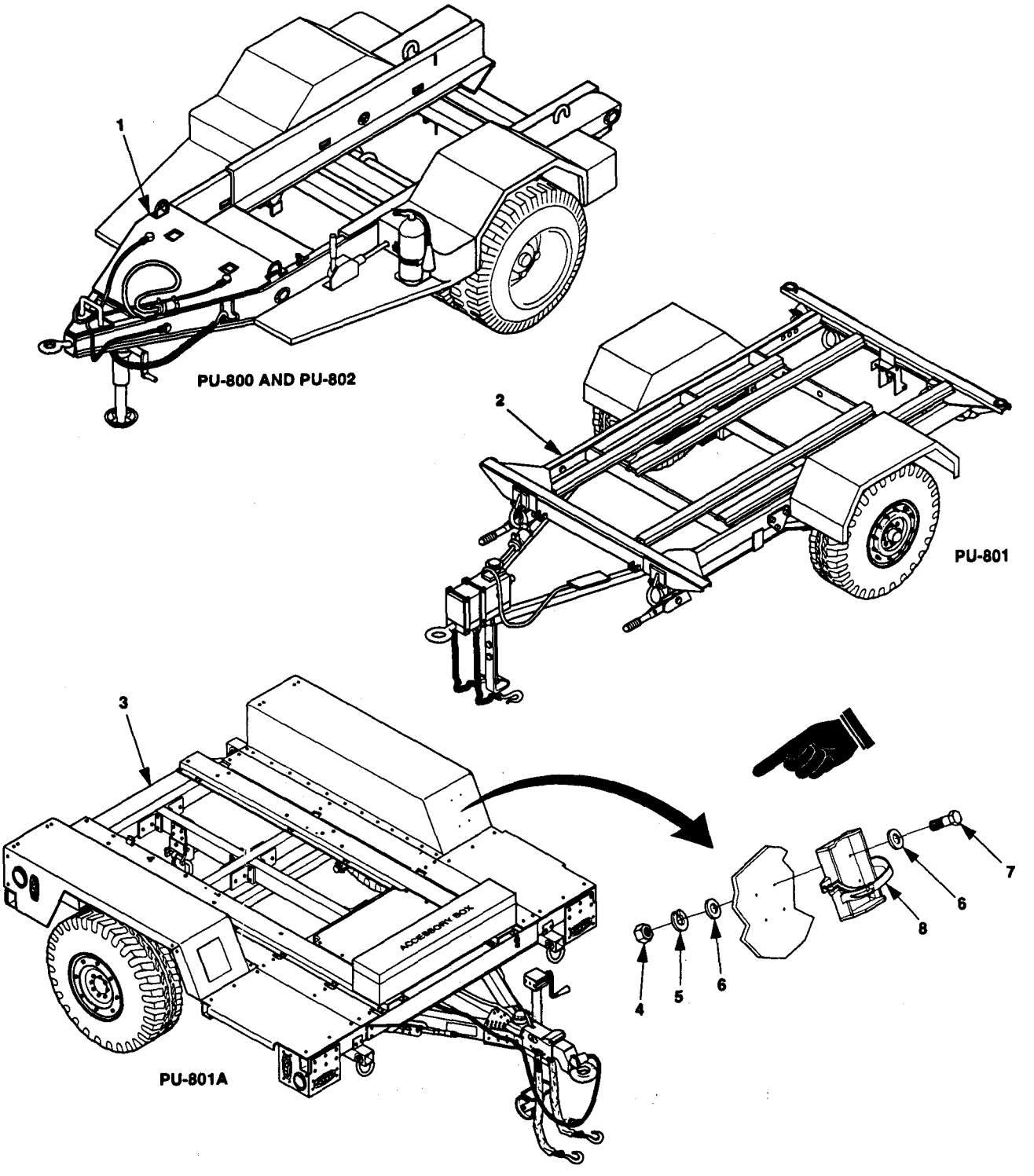

Figure F-22. Trailer Assembly.

(1) ITEM NO	(2) SMR CODE	(3) CAGEC	(4) PART NUMBER	(5) DESCRIPTION AND USABLE ON CODES (UOC)	(6) QTY
				GROUP 04 TRAILER ASSEMBLY	
				FIG.22 TRAILER ASSEMBLY	
1	PBFFF	97403	13229E9632	TRAILER,GENERATOR UOC:ESV,EVW	1
2	PBFFF	97403	13229E5640-TLR	TRAILER,GENERATOR UOC:EVV	1
3	PBFFF	30554	13230E6565	TRAILER,GENERATOR UOC:FMG	1
4	PAOZZ	96906	MS35650-3384	.NUT,PLAIN,HEXAGON UOC:FMG	4
5	PAOZZ	96906	MS35338-141	.WASHER,LOCK UOC:FMG	4
6	PAOZZ	96906	MS15795-813	.WASHER,FLAT UOC:FMG	8
7	PAOZZ	96906	MS35308-360	.SCREW,CAP,HEXAGON H UOC:FMG	4
8	PAOZZ	97403	13214E1235	.BRACKET,FIRE EXTING UOC:FMG	1
				END OF FIGURE	

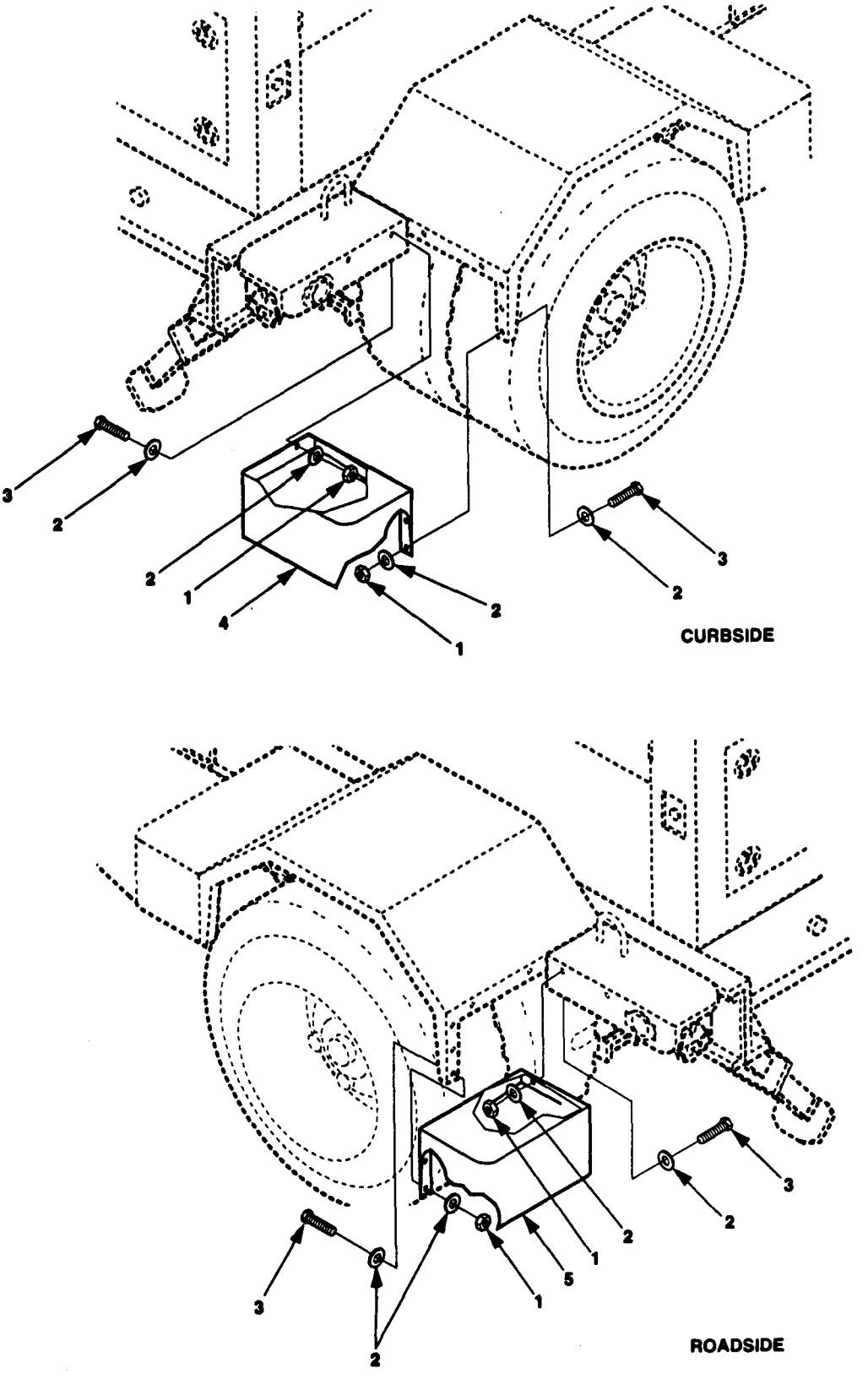

Figure F-23. 2.5 Ton Trailer, Rear Steps.

(1) ITEM NO	(2) SMR CODE	(3) CAGEC	(4) PART NUMBER	(5) DESCRIPTION AND USABLE ON CODES (UOC)	(6) QTY
				GROUP 04 TRAILER ASSEMBLY	
				FIG.23 2.5 TON TRAILER,REAR STEPS	
1	PAOZZ	96906	MS51922-9	.NUT,SELF-LOCKING,HE UOC:ESV,EVW	14
2	PAOZZ	96906	MS51412-25	.WASHER,FLAT UOC:ESV,EVW	28
3	PAOZZ	80204	B1821BH031C125N	.BOLT,MACHINE UOC:ESV,EVW	14
4	XDOFF	97403	13214E1259	.STEP,REAR CURBSIDE UOC:ESV,EVW	1
5	XDOFF	97403	13214E1261	.STEP,REAR ROADSIDE UOC:ESV,EVW	1
				END OF FIGURE	

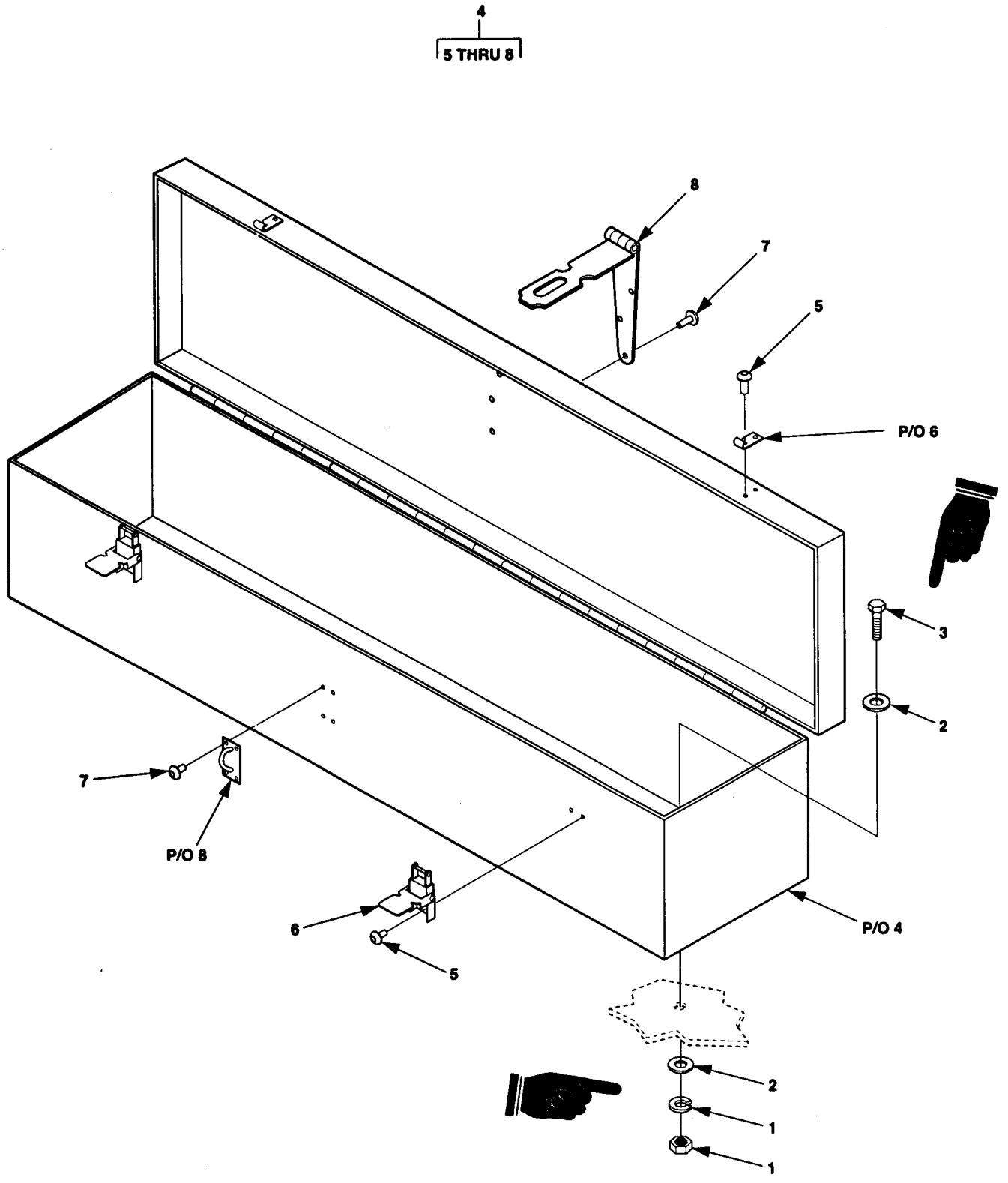

Figure F-24. Accessory Box.

(1) ITEM NO	(2) SMR CODE	(3) CAGEC	(4) PART NUMBER	(5) DESCRIPTION AND USABLE ON CODES (UOC)	(6) QTY
				GROUP 04 TRAILER ASSEMBLY	
				FIG.24 ACCESSORY BOX	
1	PAOZZ	96906	MS51922-9	.NUT,SELF-LOCKING,HE UOC:ESV,EVV,EVW	4
1	PAOZZ	96906	MS35650-3314	.NUT,PLAIN,HEX UOC:FMG	4
1	PAOZZ	96906	MS35338-140	.WASHER,LOCK UOC:FMG	4
2	PAOZZ	96906	MS51412-25	.WASHER,FLAT UOC:ESV,EVV,EVW	8
2	PAOZZ	96906	MS15795-812	.WASHER,FLAT UOC:FMG	8
3	PAOZZ	80204	B1821BH031C100N	.BOLT,MACHINE UOC:EVV	4
3	PAOZZ	80204	B1821BH031C125N	.BOLT,MACHINE VOC:ESV,EVW	4
3	PAOZZ	96906	MS35308-334	.BOLT,MACHINE UOC:FMG	2
3	PAOZZ	96906	MS35308-338	.BOLT,MACHINE UOC:FMG	2
4	XDOZZ	97403	13229E7946	.ACCESSORY BOX UOC:ESV,EVV,EVW,FMG	1
5	PAOZZ	96906	MS20613-4P5	..RIVET,SOLID UOC:ESV,EVV,EVW,FMG	8
6	PAOZZ	96906	MS18015-1	..CATCH,CLAMPING UOC:ESV,EVV,EVW,FMG	2
7	PAOZZ	96906	MS20427-4C6	..RIVET,SOLID UOC:ESV,EVV,EVW,FMG	8
8	PAOZZ	96906	MS27969-4	..HASP,HINGED UOC:ESV,EVV,EVW,FMG	1
				END OF FIGURE	

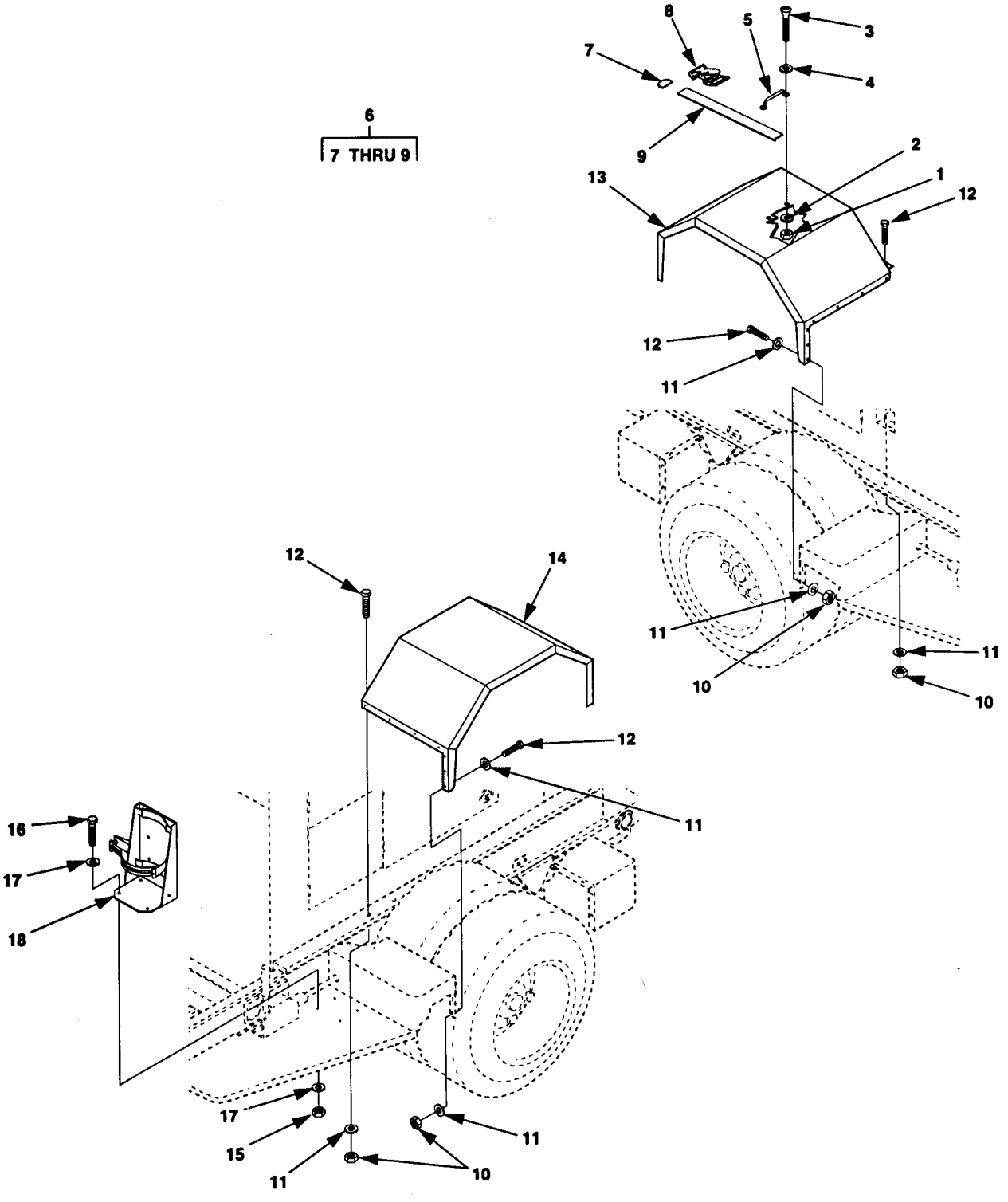

Figure F-25. 2.5 Ton Trailer Fenders.

(1) ITEM NO	(2) SMR CODE	(3) CAGEC	(4) PART NUMBER	(5) DESCRIPTION AND USABLE ON CODES (UOC)	(6) QTY
				GROUP 04 TRAILER ASSEMBLY	
				FIG. 25 2.5 TON TRAILER FENDERS	
1	PAOZZ	96906	MS35650-302	.NUT,PLAIN,HEXAGON UOC:ESV,EVW	12
2	PAOZZ	96906	MS51415-3	.WASHER,LOCK UOC:ESV,EVW	12
3	PAOZZ	96906	MS35191-273	.SCREW,MACHINE UOC:ESV,EVW	12
4	PAOZZ	96906	MS51412-21	.WASHER,FLAT UOC:ESV,EVW	12
5	PAOZZ	96906	MS51939-3	.LOOP,STRAP FASTENER UOC:ESV,EVW	6
6	PAOOO	97403	13214E9975-1	.STRAP ASSEMBLY UOC:ESV,EVW	6
7	PAOZZ	96906	MS51926-3	..CLIP,END,STRAP UOC:ESV,EVW	1
8	XAOZZ	81349	MIL-B-543TYII,STYI,CL3	..BUCKLE UOC:ESV,ESW	1
9	XAOZZ	19099	13214E9975-1-3	..WEBBING,TEXTILE UOC:ESV,EVW	1
10	PAOZZ	96906	MS51922-9	.NUT,SELF-LOCKING,HE UOC:ESV,EVW	24
11	PAOZZ	96906	MS51412-25	.WASHER,FLAT UOC:ESV,EVW	48
12	PAOZZ	80204	B1821BH031C125N	.BOLT,MACHINE UOC:ESV,EVW	24
13	PAOFF	97403	13214E1263	.FENDER,VEHICULAR CURBSIDE UOC:ESV,EVW	1
14	PAOFF	97403	13214E1264	.FENDER ROADSIDE UOC:ESV,EVW	1
15	PAOZZ	96906	MS51922-17	.NUT,SELF-LOCKING,HE UOC:ESV,ESW	4
16	PAOZZ	80204	B1821BH038C075N	.SCREW,CAP,HEXAGON H UOC:ESV	4
17	PAOZZ	96906	MS51412-27	.WASHER,FLAT UOC:ESV,EVW	4
18	XDOZZ	97403	13214E1235	.BRACKET,FIRE EXTING UOC:ESV,EVW	1

END OF FIGURE

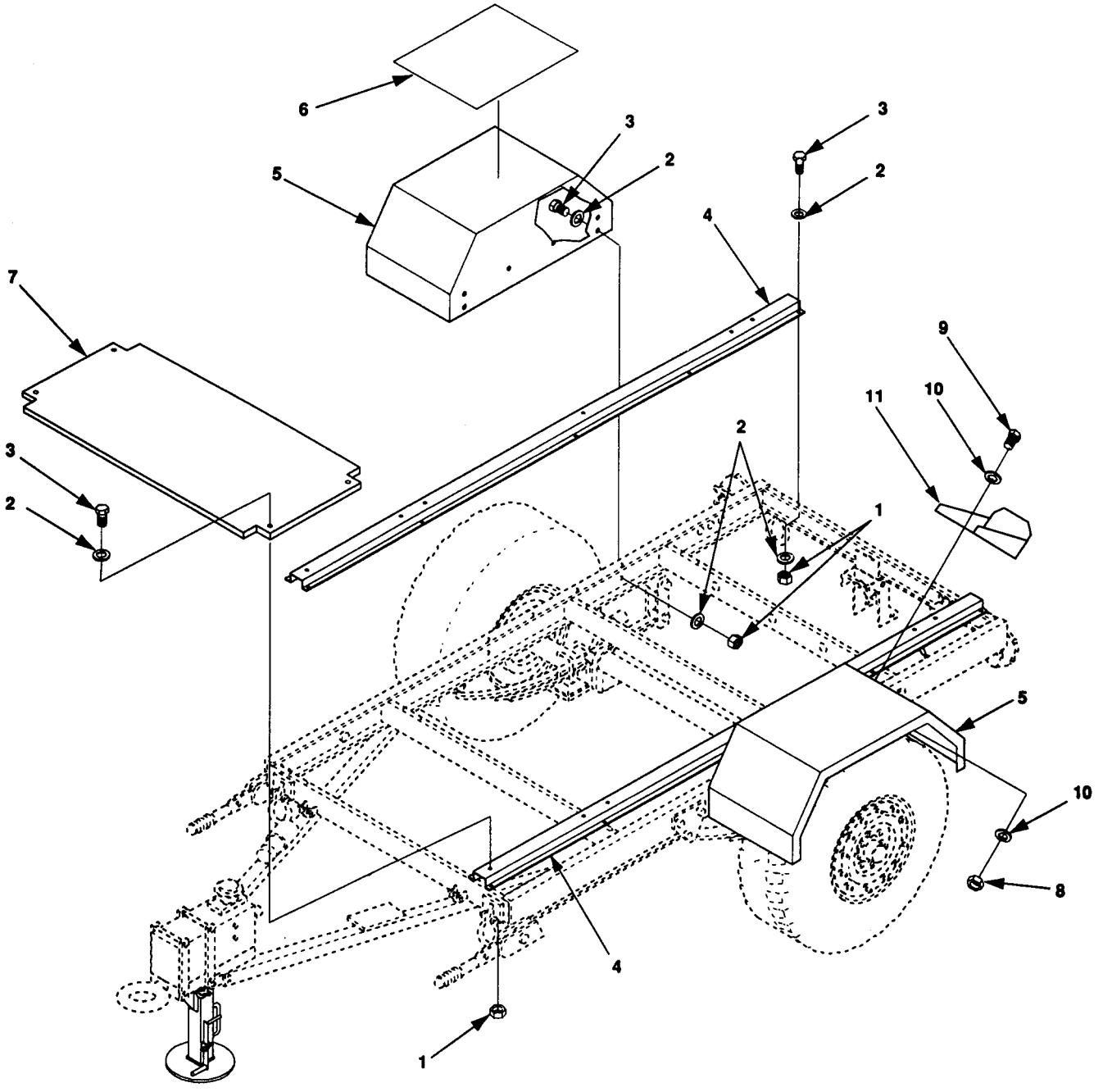

Figure F-26. Fenders One Ton Trailer

(1) ITEM NO	(2) SMR CODE	(3) CAGEC	(4) PART NUMBER	(5) DESCRIPTION AND USABLE ON CODES (UOC)	(6) QTY
				GROUP 04 TRAILER ASSY	
				FIG. 26 FENDERS ONE TON TRAILER	
1	PAOZZ	96906	MS51922-17	.NUT,SELF-LOCKING,HE UOC:EVV	36
2	PAOZZ	96906	MS27183-57	.WASHER,FLAT UOC:EVV	68
3	PAOZZ	80204	B1821BH038C125N	.SCREW,CAP,HEXAGON H UOC:EVV	36
4	XDOFF	97403	13229E5744	.RAIL UOC:EVV	2
5	XDOFF	97403	13229E9622	.FENDER UOC:EVV	2
6	MOOZZ	19099	13229E9622-3	.DECK COVERING LIGHT MAKE FROM MIL-D-17951 (81349) AS REQUIRED UOC:EVV	2
7	XDOFF	97403	13229E9621-3	.PLATFORM,1 TON TRLR UOC:EVV	1
8	PAOZZ	96906	MS51922-17	.NUT,SELF-LOCKING,HE UOC:EVV	4
9	PAOZZ	80204	B1821BH038C075N	.SCREW,CAP,HEXAGON H UOC:EVV	4
10	PAOZZ	96906	MS27183-57	.WASHER,FLAT UOC:EVV	4
11	PAOZZ	97403	13214E1235	.BRACKET,FIRE EXTING UOC:EVV	1
				END OF FIGURE	

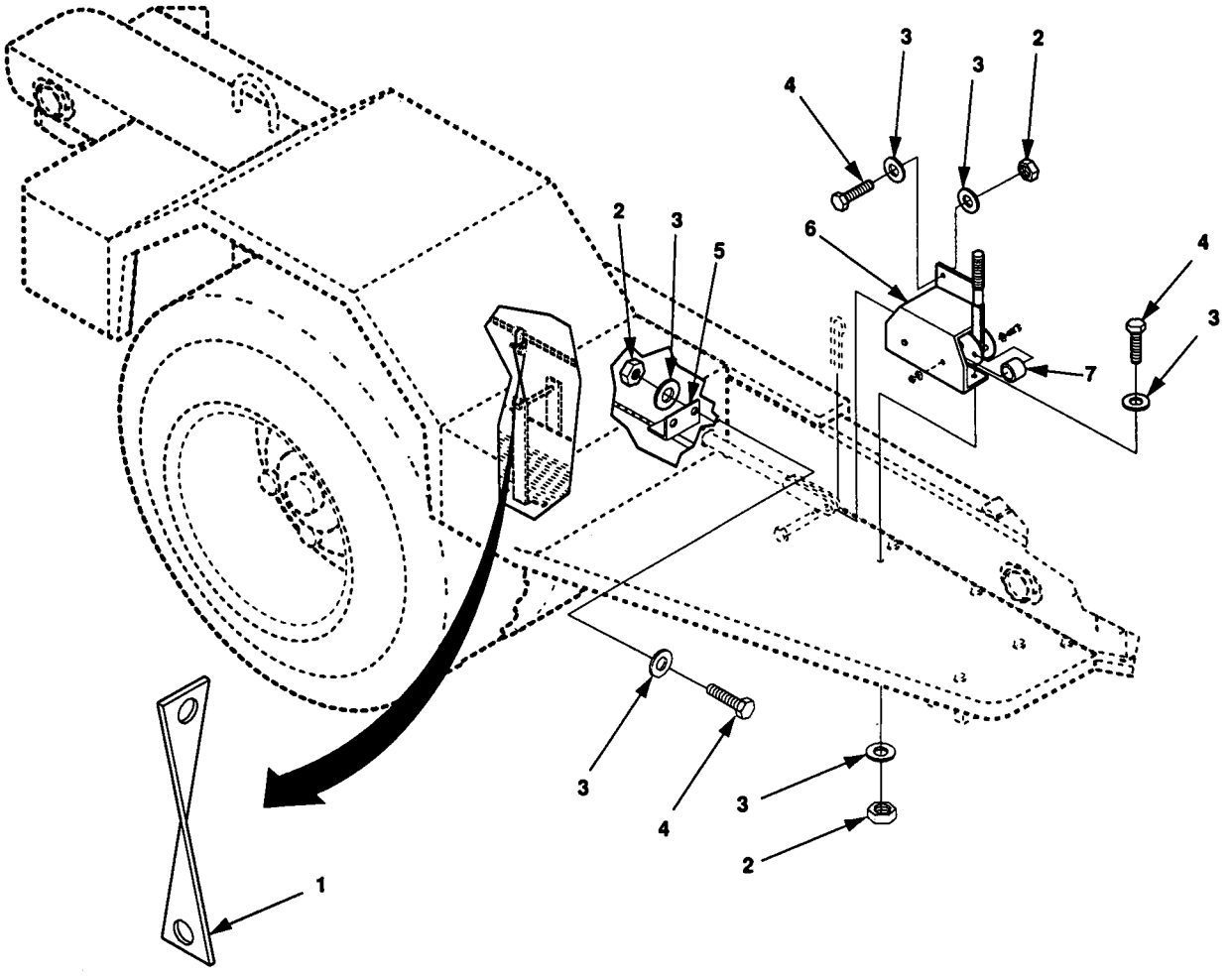

Figure F-27. Brake Assembly 2.5 Ton Trailer

(1) ITEM NO	(2) SMR CODE	(3) CAGEC	(4) PART NUMBER	(5) DESCRIPTION AND USABLE ON CODES (UOC)	(6) QTY
				GROUP 04 TRAILER ASSEMBLY	
				FIG. 27 BRAKE ASSEMBLY 2.5 TON TRAILER	
1	XDOZZ	97403	13214E1271	.STRAP,BRAKE,CABLE UOC:ESV,EVW	2
2	PAOZZ	96906	MS51922-9	.NUT,SELF-LOCKING,HE UOC:ESV,EVW	12
3	PAOZZ	96906	MS51412-25	.WASHER,FLAT UOC:ESV,EVW	24
4	PAOZZ	80204	B1821BH031C125N	.BOLT,MACHINE UOC:ESV,EVW	12
5	XDOZZ	97403	13214E1270	.BRACKET,ANGLE UOC:ESV,EVW	2
6	XDOZZ	97403	13214E1269	.BRACKET,BRAKE UOC:ESV,EVW	2
7	PAOZZ	97403	13214E1272	.SPACER,SLEEVE UOC:ESV,EVW	4
				END OF FIGURE	

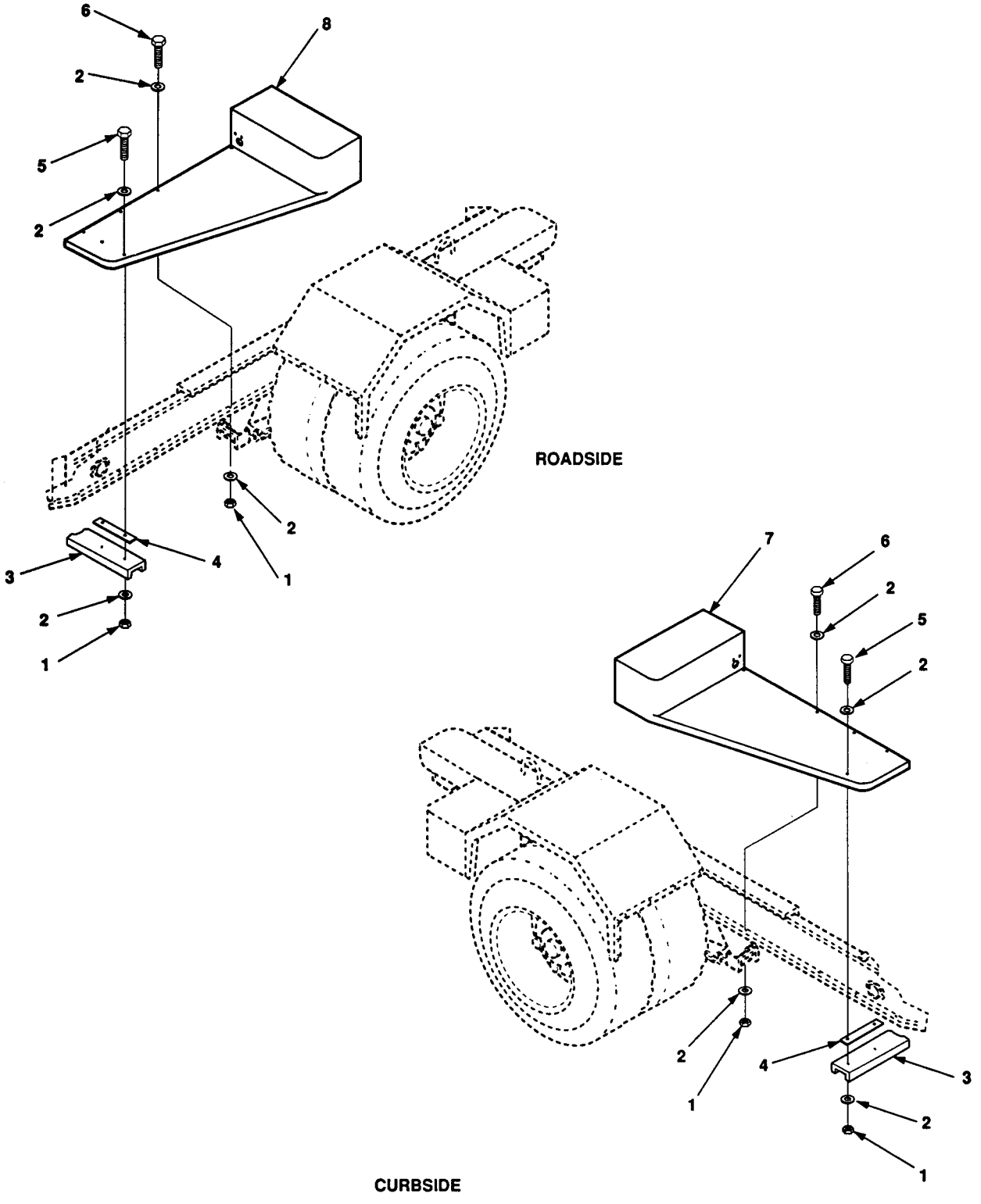

Figure F-28. Front Steps 2.5 Ton Trailer

(1) ITEM NO	(2) SMR CODE	(3) CAGEC	(4) PART NUMBER	(5) DESCRIPTION AND USABLE ON CODES (UOC)	(6) QTY
				GROUP 04 TRAILER ASSEMBLY	
				FIG. 28 FRONT STEPS 2.5 TON TRAILER	
1	PAOZZ	96906	MS51922-9	.NUT,SELF-LOCKING,HE UOC:ESV,EVW	12
2	PAOZZ	96906	MS51412-25	.WASHER,FLAT UOC:ESV,EVW	24
3	XDOZZ	97403	13214E1268	.CHANNEL UOC:ESV,EVW	1
4	PAOZZ	97403	13214E1267-1	.SPACER,PLATE UOC:ESV,EVW	2
5	PAOZZ	80204	B1821BH031C175N	.BOLT,MACHINE UOC:ESV,EVW	6
6	PAOZZ	80204	B1821BH031C125N	.BOLT,MACHINE UOC:ESV,EVW	6
7	PAOFF	97403	13214E1461	.STEP,FRONT,CURBSIDE UOC:ESV,EVW	1
8	PAOFF	97403	13214E1462	.STEP,FRONT,CURBSIDE UOC:ESV,EVW	1
				END OF FIGURE	

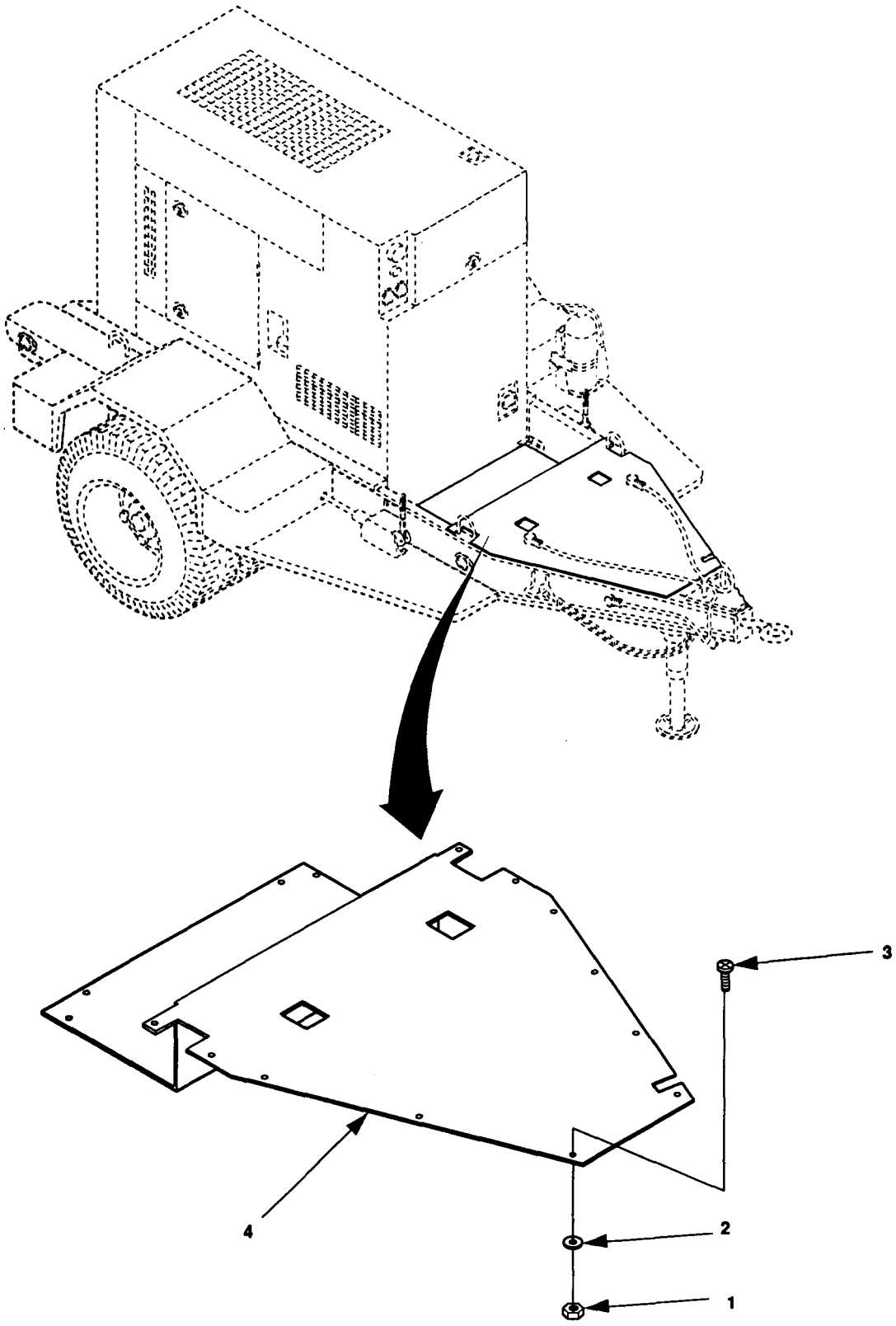

Figure F-29. Front Platform 2.5 Ton Trailer

(1) ITEM NO	(2) SMR CODE	(3) CAGEC	(4) PART NUMBER	(5) DESCRIPTION AND USABLE ON CODES (UOC)	(6) QTY
				GROUP 04 TRAILER ASSEMBLY	
				FIG.29 FRONT PLATFORM 2.5 TON TRAILER	
1	PAOZZ	96906	MS51922-9	.NUT,SELF-LOCKING,HE UOC:ESV,EVW	15
2	PAOZZ	96906	MS51412-25	.WASHER,FLAT UOC:ESV,EVW	15
3	PAOZZ	80204	B1821BH031C125N	.BOLT,MACHINE UOC:ESV,EVW	15
4	XDOFF	97403	13229E6108	.PLATFORM,FRONT UOC:ESV,EVW	1
				END OF FIGURE	

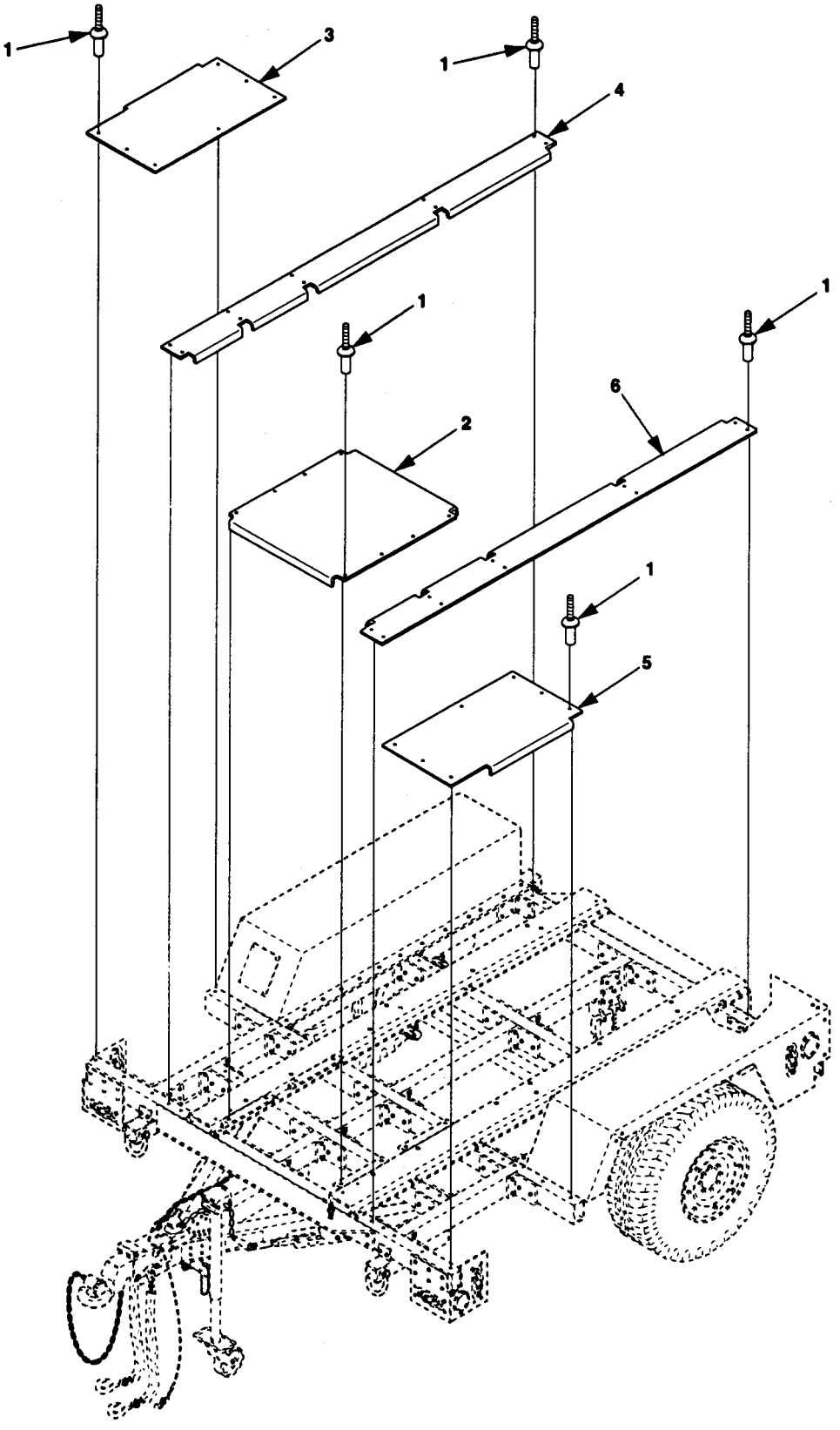

Figure F-29A. High Mobility Trailer Floors.

(1) ITEM NO	(2) SMR CODE	(3) CAGEC	(4) PART NUMBER	(5) DESCRIPTION AND USABLE ON CODES (UOC)	(6) QTY
				GROUP 04 TRAILER ASSEMBLY	
				FIG.29A PLATFORMS	
1	PAFZZ	17446	MGLP-R8-10	.RIVET,BLIND UOC:FMG	42
2	XDFZZ	30554	13230E6568	.FLOOR,CENTER UOC:FMG	1
3	XDFZZ	30554	13230E6567-1	.FLOOR,SIDE,RH UOC:FMG	1
4	XDFZZ	30554	13230E6564-1	.FLOOR,SIDE,INNER,RH UOC:FMG	1
5	XDFZZ	30554	13230E6567-2	.FLOOR,SIDE,LH UOC:FMG	1
6	XDFZZ	30554	13230E6564-2	.FLOOR,SIDE,INNER,LH UOC:FMG	1
				END OF FIGURE	

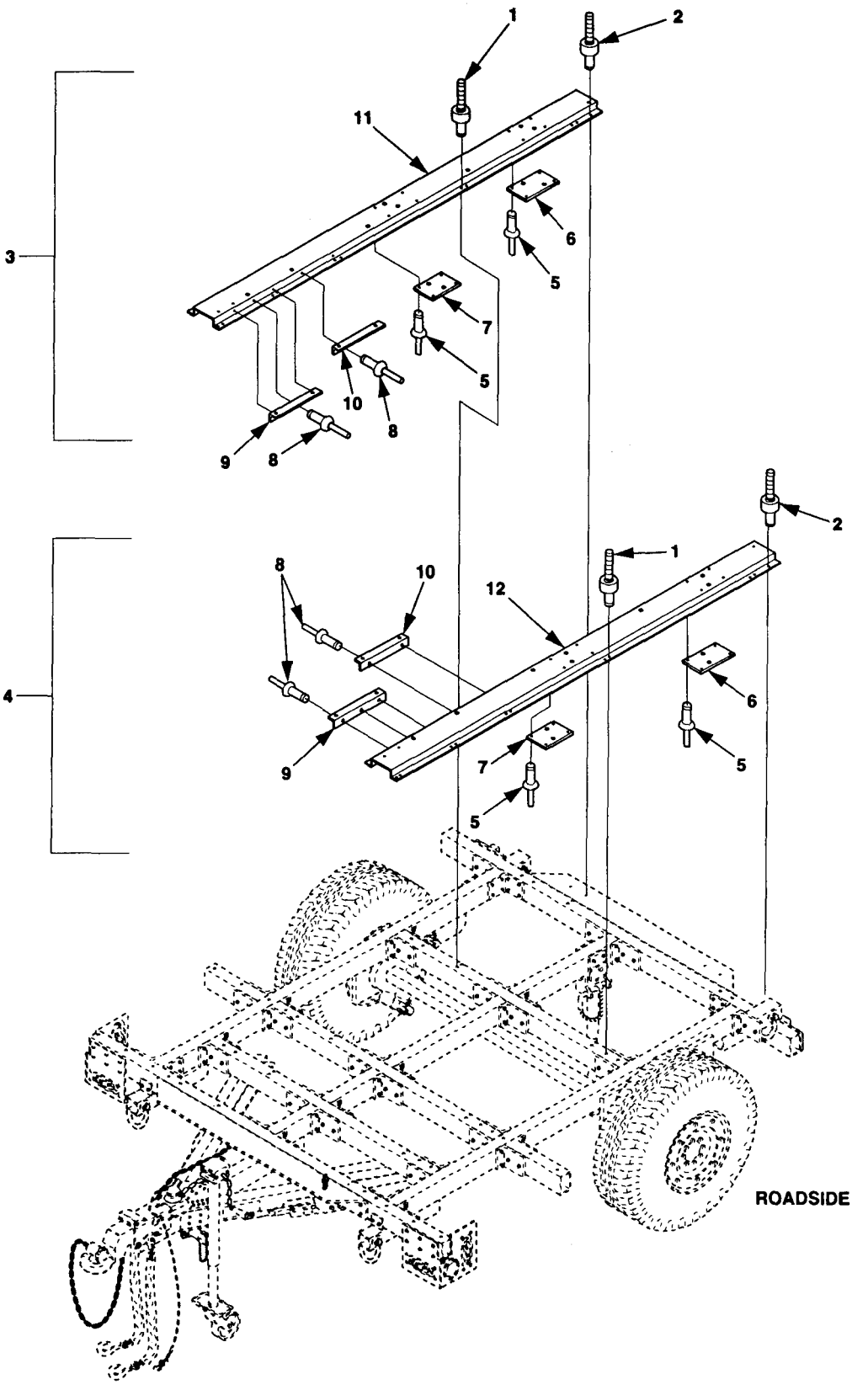

Figure F-29B. High Mobility Trailer, Mounting Rails and Fenders (Sheet 1 of 2).

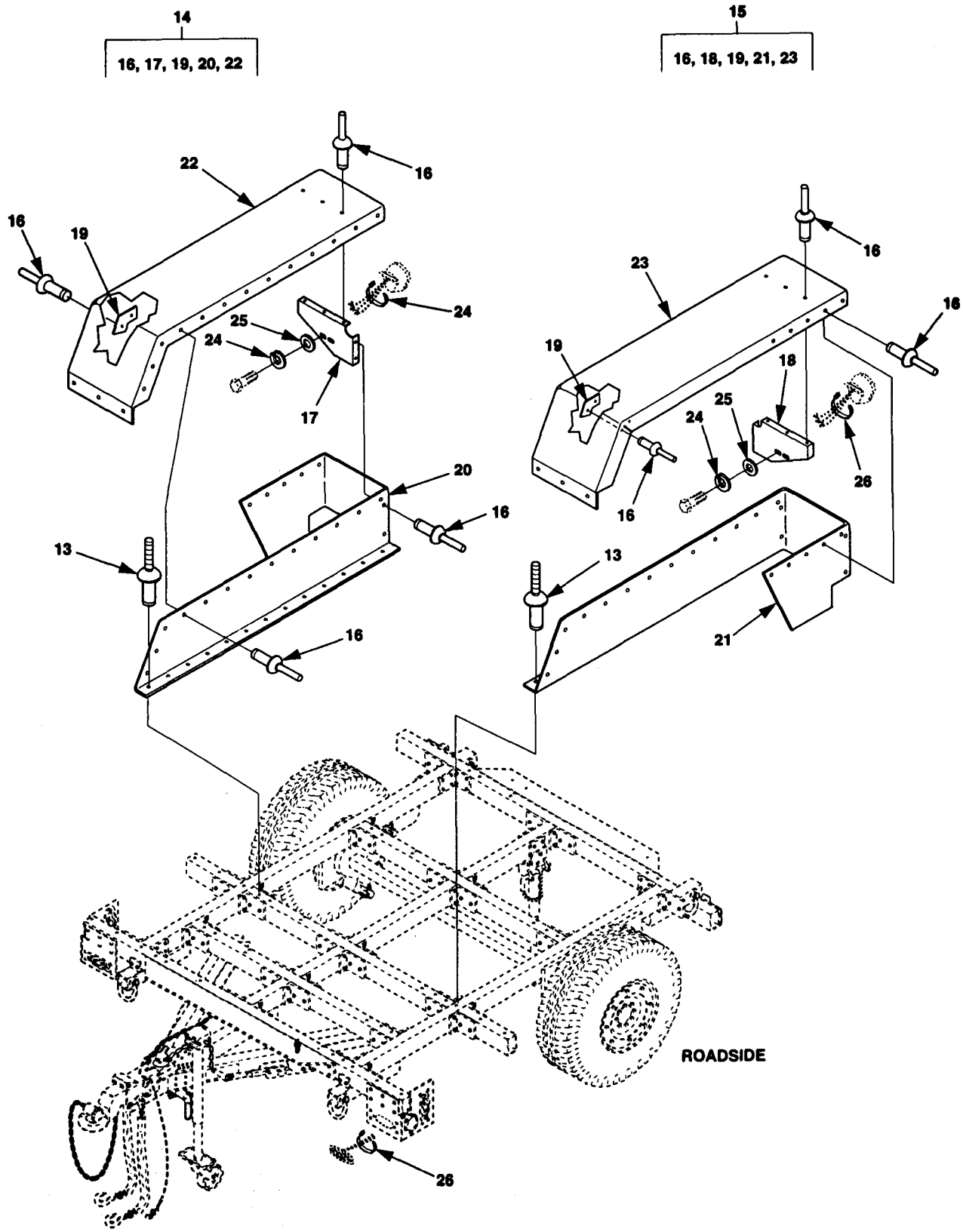

Figure F-29B. High Mobility Trailer, Mounting Rails and Fenders (Sheet 2 of 2).

(1) ITEM NO	(2) SMR CODE	(3) CAGEC	(4) PART NUMBER	(5) DESCRIPTION AND USABLE ON CODES (UOC)	(6) QTY
				GROUP 04 TRAILER ASSEMBLY	
				FIG.29B HMT,MOUNTING RAILS AND FENDERS	
1	PAFZZ	9K475	BOM-R8-8	.RIVET,BLIND UOC:FMG	40
2	PAFZZ	9K475	BOM-R8-10	.RIVET,BLIND UOC:FMG	4
3	XDFFF	30554	13230E6569-1	.RAIL ASSY,MTG,RH UOC:FMG	1
4	XDFFF	30554	13230E6569-2	.RAIL ASSY,MTG,LH UOC:FMG	1
5	PAFZZ	17446	MGL100-R6-9	..RIVET,BLIND UOC:FMG	16
6	XDFZZ	30554	13230E6527	..PLATE,DOUBLER,MTG R UOC:FMG	2
7	XDFZZ	30554	13230E6576	..PLATE,DOUBLER,MTG R UOC:FMG	2
8	PAFZZ	17446	MGLP-R8-10	..RIVET,BLIND UOC:FMG	10
9	XDFZZ	30554	13230E6577	..ANGLE,SUPPORT,MTG R UOC:FMG	2
10	XDFZZ	30554	13230E6526	..ANGLE,SUPPORT,MTG R UOC:FMG	2
11	XDFZZ	30554	13230E6578-1	..RAIL,MOUNTING GEN SET,R-H UOC:FMG	1
12	XDFZZ	30554	13230E6578-2	..RAIL,MOUNTING GEN SET,L-H UOC:FMG	1
13	PAFZZ	17446	MGLP-R8-6	.RIVET,STEEL SHANK UOC:FMG	38
14	XDFFF	30554	13230E6571-1	.FENDER,ASSEMBLY,RH UOC:FMG	1
15	XDFFF	30554	13230E6571-2	.FENDER,ASSEMBLY,LH UOC:FMG	1
16	PAFZZ	17446	MGLP-R8-6	..RIVET,STEEL SHANK UOC:FMG	58
17	XDFZZ	30554	13230E6582-1	..BRACKET,INSIDE FEND UOC:FMG	1
18	XDFZZ	30554	13230E6582-2	..BRACKET,INSIDE FEND UOC:FMG	1
19	XDFZZ	30554	13230E6579	..ANGLE,SUPPORT,FENDE UOC:FNG	2

(1) ITEM NO	(2) SMR CODE	(3) CAGEC	(4) PART NUMBER	(5) DESCRIPTION AND USABLE ON CODES (UOC)	(6) QTY
20	XDFZZ	30554	13230E6583-1	..FENDER,SIDE,TRAILER UOC:FMG	1
21	XDFZZ	30554	13230E6583-2	..FENDER,SIDE,TRAILER UOC:FMG	1
22	XDFZZ	30554	13230E6580-1	..FENDER,TOP,TRAILER UOC:FMG	1
23	XDFZZ	30554	13230E6580-2	..FENDER,TOP,TRAILER UOC:FMG	1
24	PAOZZ	96906	MS35338-141	.WASHSER,LOCK UOC:FMG	4
25	PAOZZ	96906	MS15795-813	.WASHER,FLAT UOC:FMG	4
26	PAOZZ	96906	MS3367-1-0	.STRAP,TIEDOWN,ELECT UOC:FMG	4

END OF FIGURE

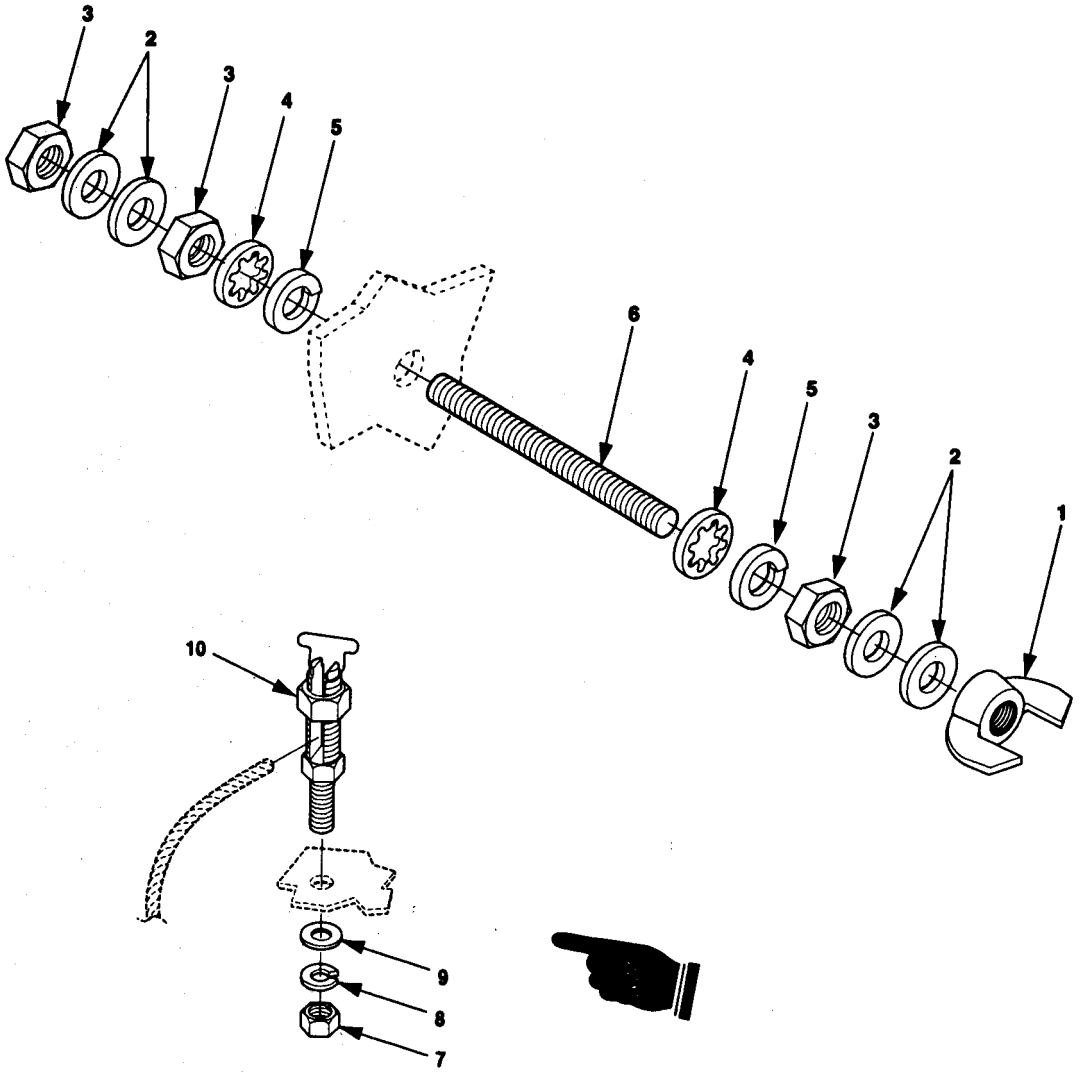

Figure F-30. Ground Stud.

(1) ITEM NO	(2) SMR CODE	(3) CAGEC	(4) PART NUMBER	(5) DESCRIPTION AND USABLE ON CODES (UOC)	(6) QTY
				GROUP 04 TRAILER ASSEMBLY	
				FIG.30 GROUND STUD	
1	PAOZZ	96906	MS35425-75	.NUT,PLAIN,WING UOC:ESV,EVV,EVW	1
2	PAOZZ	88044	AN961-616	.WASHER,FLAT UOC:ESV,EVV,EVW	4
3	PAOZZ	96906	MS16203-27	.NUT,PLAIN,HEXAGON UOC:ESV,EVV,EVW	3
4	PAOZZ	96906	MS35338-103	.WASHER,LOCK UOC:ESV,EVV,EVW	2
5	PAOZZ	96906	MS35333-110	.WASHER,LOCK UOC:ESV,EVV,EVW	2
6	PAOZZ	97403	13214E1223	.STUD,CONTINUOUS THR UOC:ESV,EVV,EVW	1
7	PAOZZ	96906	MS35691-3	.NUT,PLAIN,HEXAGON UOC:FMG	1
8	PAOZZ	96906	MS35338-158	.WASHER,LOCK UOC:FMG	1
9	PAOZZ	96906	MS15795-810	.WASHER,FLAT UOC:FMG	1
10	PAOZZ	96906	MS39347-2	.TERMINAL,STUD UOC:FMG	1
				END OF FIGURE	

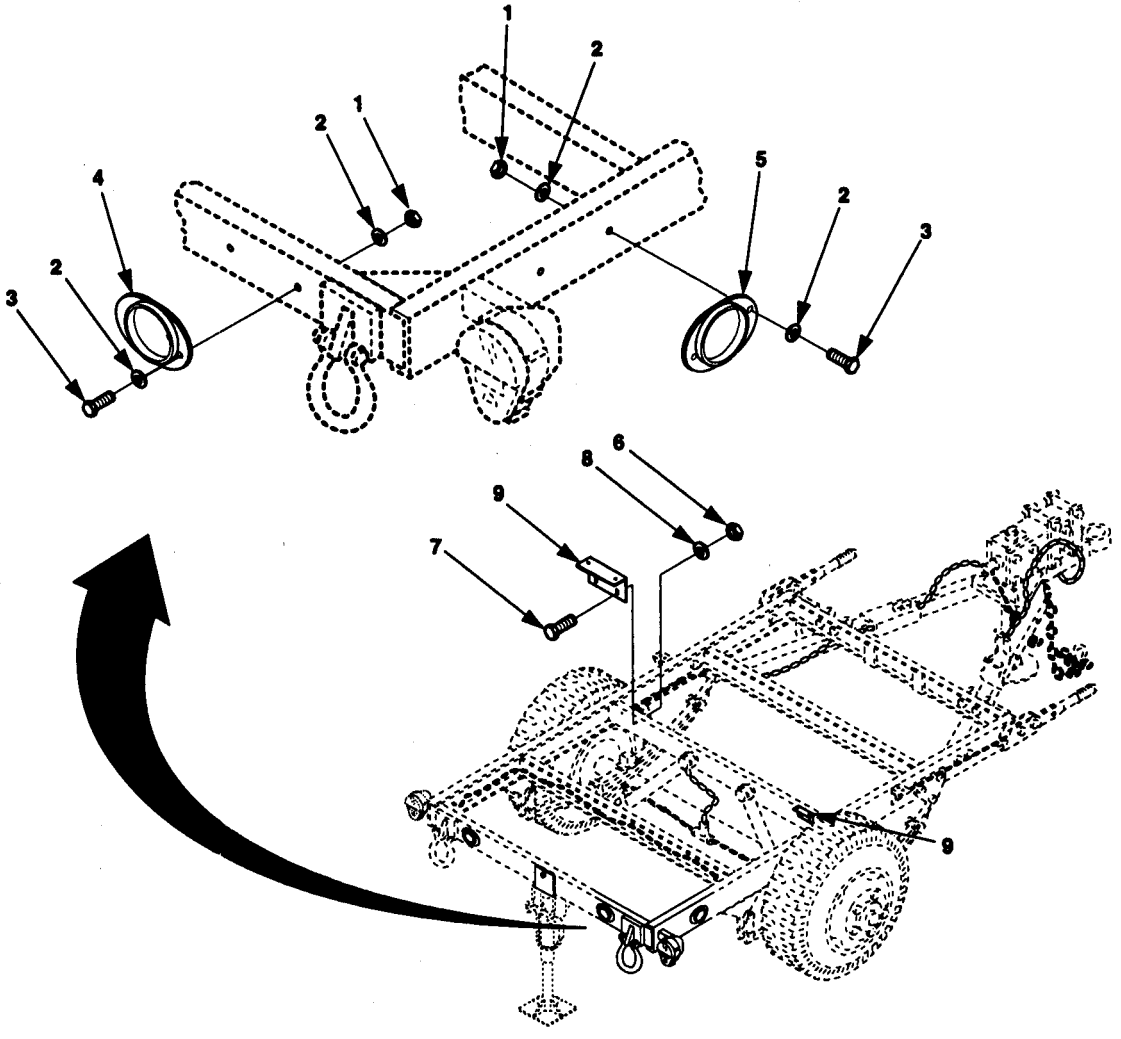

Figure F-31. One Ton Trailer, Reflectors and Brackets.

(1) ITEM NO	(2) SMR CODE	(3) CAGEC	(4) PART NUMBER	(5) DESCRIPTION AND USABLE ON CODES (UOC)	(6) QTY
				GROUP 04 TRAILER ASSEMBLY	
				FIG.31 ONE TON TRAILER, REFLECTORS AND BRACKETS	
1	PAOZZ	96906	MS51922-1	.NUT,SELF-LOCKING,HEX UOC:EVV	12
2	PAOZZ	96906	MS51412-4	.WASHER,FLAT UOC:EVV	12
3	PAOZZ	80204	B1821BH025C088N	.SCREW,CAP,HEXAGON UOC:EVV	12
4	PAOZZ	96906	MS35387-1	.REFLECTOR,INDICATIN RED UOC:EVV	4
5	PAOZZ	96906	MS35387-2	.REFLECTOR,INDICATING AMBER UOC:EVV	2
6	PAOZZ	96906	MS51922-17	.NUT,SELF-LOCKING,HEX UOC:EVV	4
7	PAOZZ	80204	B1821BH038C225N	.SCREW,CAP,HEXAGON UOC:EVV	4
8	PAOZZ	96906	MS27183-57	.WASHER,FLAT UOC:EVV	4
9	XDOZZ	97403	13229E5758	.BRACKET,RAIL,MOUNTI UOC:EVV	2
				END OF FIGURE	

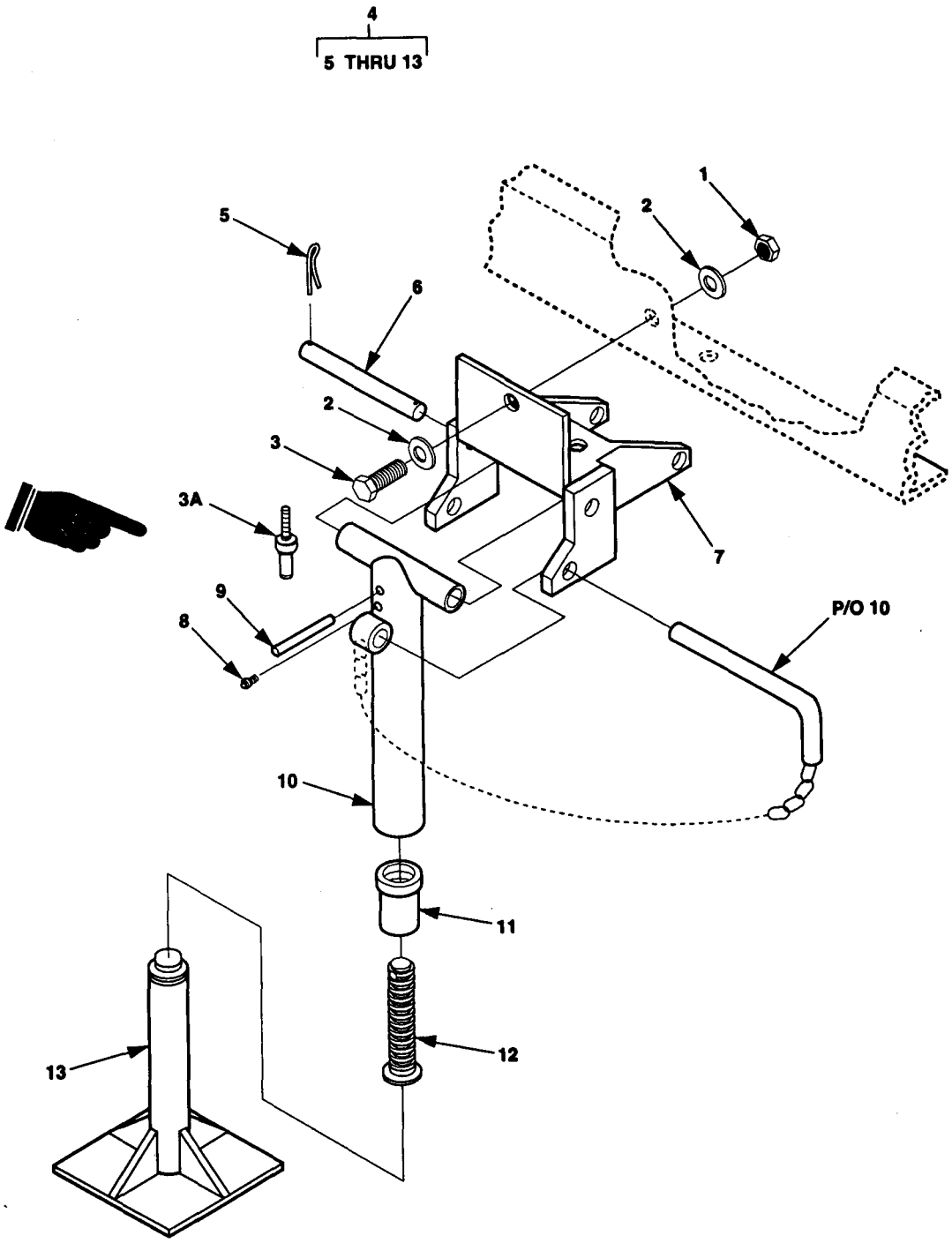

Figure F-32. One Ton Trailer and HMT Leg Prop Assembly.

(1) ITEM NO	(2) SMR CODE	(3) CAGEC	(4) PART NUMBER	(5) DESCRIPTION AND USABLE ON CODES (UOC)	(6) QTY
				GROUP 04 TRAILER ASSEMBLY	
				FIG.32 ONE TON AND HIGH MOBILITY TRAILERS LEG PROP	
1	PAOZZ	96906	MS51922-17	.NUT,SELF-LOCKING,HE UOC:EVV	3
2	PAOZZ	96906	MS27183-57	.WASHER,FLAT UOC:EVV	6
3	PAOZZ	80204	B1821BH050C125N	.SCREW,CAP,HEXAGON H UOC:EVV	3
3A	PAOZZ	17446	BOM-R12-8	.RIVET,BLIND UOC:FMG	3
4	PAFFF	97403	13214E1206-2	.TRAILER LEG PROP AS UOC:FMG	1
4	PAOOO	97403	13214E1206-1	.TRAILERS LEG PROP AS UOC:EVV	1
5	PAOZZ	96906	MS24665-353	..PIN,COTTER UOC:EVV,FMG	2
6	PBOZZ	97403	13214E1209	..PIN,STRAIGHT,HEADLESS UOC:EVV,FMG	1
7	XAOZZ	97403	13214E1207	..BRACKET UOC:EVV,FMG	1
8	PAOZZ	96906	MS15006-1	..FITTING,LUBRICATION UOC:EVV,FMG	1
9	PAOZZ	96906	MS16562-66	..PIN,SPRING UOC:EVV,FMG	1
10	XAOZZ	97403	13214E1208-1	..CHAIN,PIN RETAINING UOC:EVV,FMG	1
11	XAOZZ	97403	13214E1211	..NUT,SLEEVE UOC:EVV,FMG	1
12	XAOZZ	97403	13214E1210	..BOLT,MACHINE UOC:EVV,FMG	1
13	PBOZZ	97403	13214E1212-1	..SUPPORT BASE,LG UOC:EVV,FMG	1
				END OF FIGURE	

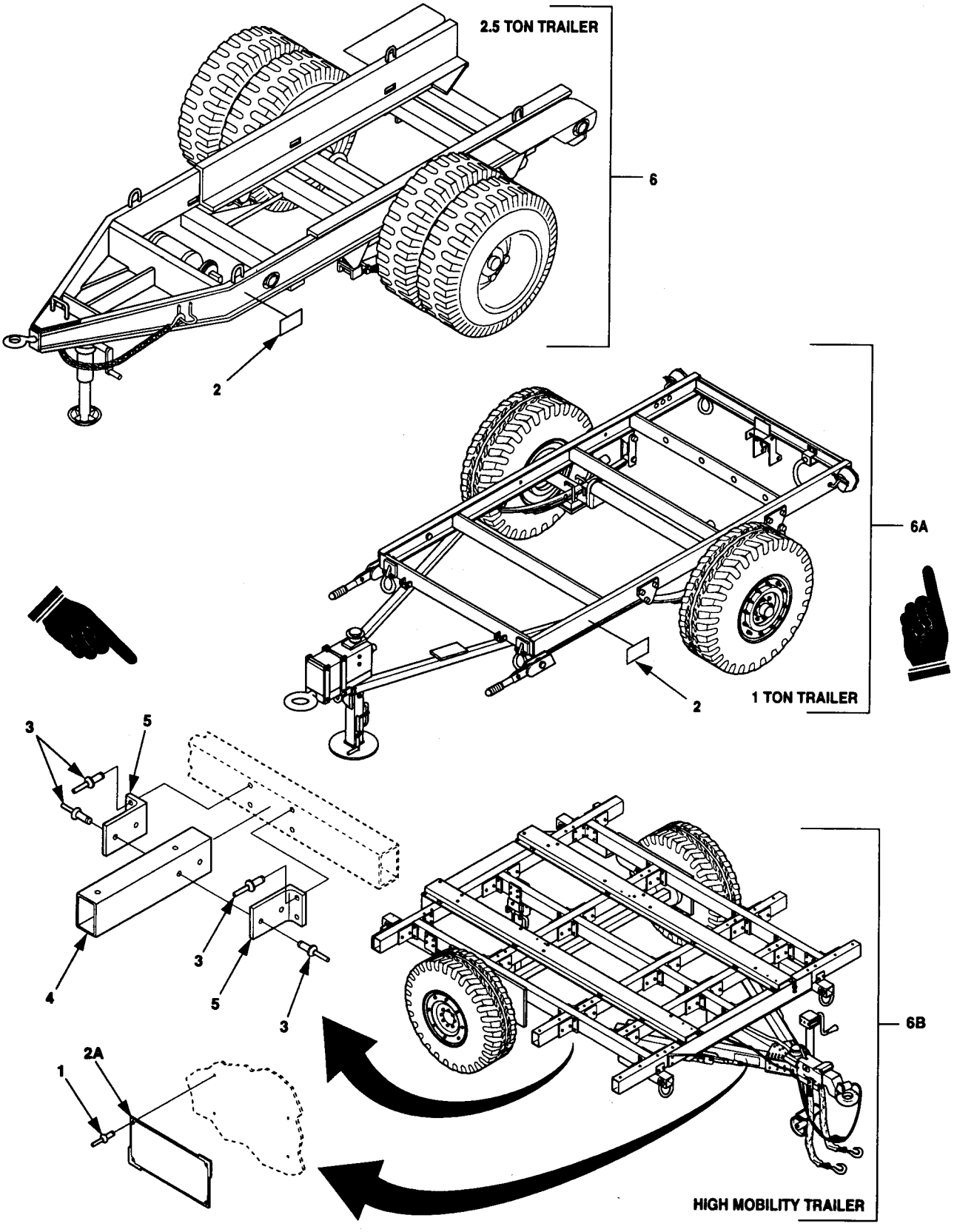

Figure F-33. Trailer Chassis.

(1) ITEM NO	(2) SMR CODE	(3) CAGEC	(4) PART NUMBER	(5) DESCRIPTION AND USABLE ON CODES (UOC)	(6) QTY
				GROUP 04 TRAILER ASSEMBLY	
				FIG.33 TRAILER CHASSIS	
1	PAOZZ	07707	AD45ABS	.RIVET,BLIND UOC:FMG	4
2	MDOZZ	97403	13205E4918	.PLATE,IDENTIFICATIO UOC:ESV,EVV,EVW	1
2A	MDOZZ	30554	13230E6572	.PLATE,IDENTIFICATIO CHASSIS VARIANT UOC:FMG	1
3	PAFZZ	17446	BOM-R8-8	.RIVET,BLIND UOC:FMG	16
4	XDFZZ	30554	13230E6514	.STRUCTURAL SECTION UOC:FMG	2
5	XDFZZ	30554	13230E6524	.CLIP,FRAME,CORNER UOC:FMG	4
6	XAFFF	97403	13214E1258	.CHASSIS,TRLR,2.5TON UOC:ESV,EVW	1
6A	XAFFF	97403	13229E5757	.CHASSIS ASSEMBLY UOC:EVV	1
6B	XAFFF	19207	12450001	.CHASSIS,TRAILER-HMT UOC:FMG	1

END OF FIGURE

(1) ITEM NO	(2) SMR CODE	(3) CAGEC	(4) PART NUMBER	(5) DESCRIPTION AND USABLE ON CODES (UOC)	(6) QTY
				GROUP 05 BULK MATERIALS	
				FIG.BULK	
1	PAFZZ	81349	CO-04HDF(4/4-4/12R)1290	CABLE UOC:EVX	V
2	PAOZZ	81349	22806-000-00	DECK COVERING LIGHT UOC:EVW	V
3	PAOZZ	96906	MS21266-2N	GROMMET,PLASTIC EDG UOC:EVX	V
4	PAOZZ	81349	M6000F00200	HOSE,NONMETALLIC UOC:ESV,EVV,EVW	V
5	PAOZZ	01276	FC173-5	HOSE,NONMETALLIC UOC:EVW	V
6	PAFZZ	81349	M23053/5-112-0	INSULATION SLEEVING UOC:EVX	V
7	PAOZZ	81349	M23053/5-107-9	INSULAATION SLEEVING UOC:EVX	V
8	PAFZZ	81349	M23053/5-108-9	INSULATION SLEEVING UOC:EVX	V
9	PAOZZ	81349	M23053/5-108-4	INSULATON SLEEVING UOC:EVW	V
10	PAFZZ	81349	M23053/5-104-4	INSULATAION SLEEVING UOC:EVW	V
11	PAFZZ	81349	M23053/5-105-4	INSULATION SLEEVING UOC:EVW	V
12	PAOZZ	88001	C1832	ROPE,FIBROUS UOC:EVX	V
13	PAFZZ	81349	M24768/2-S-7	SHEET,PLASTIC UOC:EVX	V
14	PAOZZ	81349	M22759/16-20-9	WIRE,ELECTRICAL UOC:EVX	V
15	PAFZZ	81349	M5086/2-6-9	WIRE,ELECTRICAL UOC:EVX	V
16	PAFZZ	81349	M5086/2-4-9	WIRE,ELECTRICAL UOC:EVX	V
17	PAOZZ	81349	M22759/16-16-9	WIRE,ELECTRICAL UOC:EVX	V
18	PAOZZ	81348	QQW343C06B1B	WIRE,ELECTRICAL UOC:EVS,EVV,EVX	V

END OF FIGURE

Section III

Special Tools List

(Not Applicable)

CROSS-REFERENCE INDEXES

NATIONAL STOCK NUMBER INDEX

STOCK NUMBER	FIG.	ITEM	STOCK NUMBER	FIG.	ITEM
5320-00-005-6279	3	15	5940-00-115-4996	9	3
5999-00-014-0952	2	6		10	7
5940-00-021-3321	30	10		13	2
5306-00-021-3912	24	3		13	7
5306-00-021-4065	24	3		13	12
5310-00-022-8847	30	5		13	17
5310-00-042-4229	8	2		13	22
5310-00-043-1680	8	5		13	27
	10	2		16	14
	25	2	5940-00-143-4774	5	10
5310-00-044-6477	23	2	5940-00-143-4793	12	5
	24	2	4730-00-172-0049	32	8
	25	11	5310-00-184-8971	30	4
	27	3	4710-00-185-6948	19	3
	28	2	5999-00-186-3912	19	19
	29	2	5310-00-187-2413	30	2
5305-00-052-1457	14	6	9905-00-202-3639	31	5
5320-00-052-1972	20	7	4210-00-202-7858	20	1
	33	1	9905-00-205-2795	31	4
5970-00-052-4877	BULK	11	5310-00-209-1239	19	9
5305-00-054-5652	3	22	5310-00-213-4960	8	9
5305-00-054-6670	5	1	4210-00-223-4857	26	11
5305-00-054-6671	3	7	5310-00-225-6993	1	1
	8	10	5306-00-226-4827	24	3
5310-00-056-3395	3	1	5306-00-226-4829	23	3
	18	1		24	3
5305-00-059-3660	15	3		25	12
5340-00-066-1235	19	1		27	4
5305-00-068-0511	26	3		28	6
5305-00-071-2067	32	3		29	3
5305-00-071-2070	1	3	5306-00-226-4832	28	5
5305-00-071-2505	31	3	5307-00-227-1741	30	6
5975-00-074-2072	3	25	5340-00-229-0340	25	5
	6	2	5940-00-230-0515	11	2
	12	2		17	2
5340-00-078-3615	5	7	5340-00-234-8422	24	8
5340-00-078-7029	25	7	5310-00-245-3612	22	4
5970-00-082-3948	BULK	8	5310-00-250-9477	14	1
5310-00-087-4652	25	15	5310-00-252-8748	24	1
	26	1	5940-00-271-9504	19	20
	26	8	4820-00-277-1765	21	6
	31	6	4730-00-277-5115	19	6
	32	1	5940-00-283-5280	12	3
5310-00-088-1251	21	1	5340-00-291-3484	14	5
	31	1	5310-00-400-5503	4	1
5940-00-113-8179	11	3		10	14
	17	3	5330-00-402-5125	19	5
5940-00-113-8190	20	2	5310-00-421-9608	8	8
5935-00-114-5781	10	13	5320-00-483-0558	29B	1
5935-00-114-8061	8	16		33	3
5940-00-115-2678	4	9	5305-00-543-4372	25	16
				26	9

CROSS-REFERENCE INDEXES

NATIONAL STOCK NUMBER INDEX

STOCK NUMBER	FIG.	ITEM	STOCK NUMBER	FIG.	ITEM
5940-00-557-4338	10	8	6210-00-900-9423	7	1
	13	3	4730-00-908-3194	20	4
	13	8	5975-00-924-9927	19	18
	13	13	4020-00-928-3438	BULK	12
	13	18	5310-00-933-8118	3	21
	13	23	5310-00-933-8119	3	9
	13	28		5	3
	16	2	5310-00-933-8120	15	2
	16	6	5310-00-933-8121	4	2
	16	10		10	15
5940-00-557-4341	16	18		14	2
5940-00-557-4344	9	2	5310-00-934-9748	3	20
	10	6	5310-00-934-9751	8	4
6145-00-578-6594	BULK	15		10	1
6145-00-578-6595	BULK	16		25	1
5320-00-582-3304	3	18	5310-00-934-9760	15	1
5320-00-582-3305	3	13	5970-00-944-1328	BULK	6
5320-00-582-3502	3	5	5365-00-944-2692	28	4
5320-00-582-5677	30	9	5310-00-974-6623	24	1
5310-00-584-7995	30	3	5340-00-975-2126	3	6
4710-00-597-8731	19	2		3	14
5310-00-614-3506	1	2		24	6
5310-00-625-5756	24	2	5310-00-982-6814	5	5
5305-00-638-8920	31	7	5310-00-984-3806	23	1
5940-00-660-3633	12	4		24	1
5305-00-680-4262	22	4		25	10
5305-00-685-3511	4	4		27	2
	10	16		28	1
5305-00-688-2111	3	3		29	1
	18	3	5975-00-984-6582	29B	26
5305-00-727-6804	1	3	5310-00-984-7042	22	5
5970-00-740-2971	BULK	7		29B	24
5320-00-753-3830	24	5	5305-00-984-7341	25	3
5310-00-768-0321	1	1	5305-00-988-1727	21	3
5970-00-787-2325	BULK	10	5310-00-989-0908	30	7
5310-00-802-4701	22	6	5365-00-989-3304	27	7
	29B	25	5310-00-989-5945	8	1
5310-00-809-5997	21	8	5305-00-993-1851	8	6
5310-00-809-9703	20	6		10	3
4730-00-812-1333	21	4	5120-01-013-1676	19	13
5940-00-813-0698	6	3	5120-01-019-9564	4	5
5315-00-838-4584	32	9	4730-01-020-5607	21	7
5315-00-839-5822	32	5	5935-01-035-5139	17	6
5305-00-841-2681	19	7	6145-01-042-4621	BULK	14
4730-00-842-2201	21	11	6145-01-044-8799	BULK	17
5935-00-852-9611	11	6	5310-01-078-5996	30	1
5975-00-878-3791	19	15	5999-01-091-3187	2	5
5310-00-880-5978	3	8	5320-01-140-1479	29B	26
	5	2	5310-01-141-6672	3	23
5310-00-883-9417	30	8	2330-01-150-9864	28	7

CROSS-REFERENCE INDEXES

NATIONAL STOCK NUMBER INDEX

STOCK NUMBER	FIG.	ITEM	STOCK NUMBER	FIG.	ITEM
5935-01-154-2472	2	4			
5315-01-162-0143	32	6			
5999-01-167-0838	2	7			
2590-01-167-8596	32	13			
5935-01-175-8419	3	24			
5310-01-180-7157	1	1B			
2510-01-195-4273	25	13			
2510-01-196-4682	28	8			
2510-01-213-3242	25	14			
6145-01-226-9164	BULK	18			
	20	3			
6210-01-230-1851	7	4			
5310-01-266-4641	1	2			
5340-01-277-5068	4	6			
5310-01-280-5796	26	2			
	26	10			
	31	8			
	32	2			
4720-01-386-4210	20	5			

CROSS-REFERENCE INDEXES

PART NUMBER INDEX

CAGEC	PART NUMBER	STOCK NUMBER	FIG.	ITEM
58536	A-A-1106	4210-00-202-7858	20	1
07707	AD45ABS	5320-00-052-1972	20	7
			33	1
88044	AN816-5-4	4730-00-277-5115	19	6
88044	AN960-C4	5310-01-141-6672	3	23
88044	AN961-616	5310-00-187-2413	30	2
17446	BOM-R12-8		32	3A
9K475	BOM-R8-10	5320-01-140-1470	29B	2
17446	BOM-R8-8	5320-00-483-0558	29B	1
			33	3
80204	B1821BH025C088N	5305-00-071-2505	31	3
80204	B1821BH031C100N	5306-00-226-4827	24	3
80204	B1821BH031C125N	5306-00-226-4829	23	3
			24	3
			25	12
			27	4
			28	6
			29	3
80204	B1821BH031C175N	5306-00-226-4832	28	5
80204	B1821BH038C075N	5305-00-543-4372	25	16
			26	9
80204	B1821BH038C125N	5305-00-068-0511	26	3
80204	B1821BH038C138N	5305-00-688-2111	3	3
			18	3
80204	B1821BHO38C225N	5305-00-638-8920	31	7
80204	B1821BH050C125N	5305-00-071-2067	32	3
80204	B1821BH050C175N	5305-00-071-2070	1	3
01667	CBA-70	5940-00-271-9504	19	20
12670	CLE-403001	5120-01-019-9564	4	5
81349	C0-04HDE(4/4-4/1 2R)1290		BULK	1
88001	C1832	4020-00-928-3438	BULK	12
01276	FC173-5		BULK	5
15277	FS0216B122-1	5975-00-878-3791	19	15
81348	GGG-H-86,TY10CL1		19	14
73616	GRB58	5975-00-924-9927	19	18
73616	GRC 58		19	17
58224	G9B (GR)		7	3
56681	HLP1053A		19	16
7E656	JCG-6026		15	5
17446	MGLP-R8-10		29A	1
			29B	8
17446	MGLP-R8-6		29B	13
			29B	16
17446	MGL100-R6-9		29B	5
81349	MIL-B-543TYII,STYI,CL3		25	8
96906	MS124696	5340-00-291-3484	14	5
96906	MS15006-1	4730-00-172-0049	32	8
96906	MS15795-807	5310-00-880-5978	3	8
			5	2

CROSS-REFERENCE INDEXES

PART NUMBER INDEX

CAGEC	PART NUMBER	STOCK NUMBER	FIG.	ITEM
96906	MS15795-810	5310-00-582-5677	30	9
96906	MS15795-812	5310-00-625-5756	24	2
96906	MS15795-813	5310-00-802-4701	22	6
			29B	25
96906	MS15795-817	5310-00-614-3506	1	2
96906	MS15795-852		4	3
			10	17
			14	3
			21	2
96906	MS15795-857		15	4
96906	MS16203-27	5310-00-584-7995	30	3
96906	MS16562-66	5315-00-838-4584	32	9
96906	MS18015-1	5340-00-975-2126	3	6
			3	14
			24	6
96906	MS20427-4C6		24	7
96906	MS20470AD4-4-5	5320-00-005-6279	3	15
96906	MS20600AD4W2	5320-00-582-3304	3	18
96906	MS20600AD4W3	5320-00-582-3305	3	13
96906	MS20601AD4W4	5320-00-582-3502	3	5
96906	MS20613-4P5	5320-00-753-3830	24	5
96906	MS20659-111	5940-00-115-2678	4	9
96906	MS20659-145	5940-00-115-4996	9	3
			10	7
			13	2
			13	7
			13	12
			13	17
			13	22
			13	27
			16	14
96906	MS21044C08	5310-00-982-6814	5	5
96906	NS21266-2N		BULK	3
96906	MS21322-33	5340-00-078-3615	5	7
96906	MS24519-9	4730-00-809-9703	20	6
96906	MS24587-5	4730-00-842-2201	21	11
96906	MS24665-353	5315-00-839-5822	32	5
96906	MS24693-C52		5	6
96906	MS25036-101	5940-00-813-0698	6	3
96906	MS25036-106	5940-00-283-5280	12	3
96906	MS25036-107	5940-00-113-8179	11	3
			17	3
96906	MS25036-110	5940-00-143-4793	12	5
96906	MS25036-120	5940-00-557-4344	9	2
			10	6
96906	MS25036-122	5940-00-113-8190	20	2
96906	MS25036-123	5940-00-557-4341	16	18

CROSS-REFERENCE INDEXES

PART NUMBER INDEX

CAGEC	PART NUMBER	STOCK NUMBER	FIG.	ITEM
96906	MS25036-125	5940-00-557-4338	10	8
			13	3
			13	8
			13	13
			13	18
			13	23
			13	28
			16	2
			16	6
			16	10
96906	MS25036-153	5940-00-143-4774	5	10
96906	MS25036-154	5940-00-230-0515	11	2
			17	2
96906	MS25036-155	5940-00-660-3633	12	4
96906	MS25043-18DA	5935-01-175-8419	3	24
96906	MS27130-93		3	28
96906	MS27130-96		3	27
96906	MS27183-17	5310-00-809-5997	21	8
96906	MS27183-57	5310-01-280-5796	26	2
			26	10
			31	8
			32	2
96906	MS27407-3		5	9
96906	MS27969-4	5340-00-234-8422	24	8
96906	MS3100R20-27S		12	8
96906	MS3102R18-11P	5935-00-852-9611	11	6
96906	MS3106R20-27P		6	6
96906	MS3348-6-8L	5999-01-167-0838	2	7
96906	MS3367-1-0	5975-00-984-6582	29B	26
96906	MS3367-1-9	5975-00-074-2072	3	25
			6	2
			12	2
96906	MS3456W18-11S	5935-01-035-5139	17	6
96906	MS35191-273	5305-00-984-7341	25	3
96906	MS35206-283	5305-00-988-1727	21	3
96906	MS35207-267	5305-00-993-1851	8	6
			10	3
96906	MS35307-414	5305-00-727-6804	1	3
96906	MS35308-3	5305-00-052-1457	14	6
96906	MS35308-306	5305-00-685-3511	4	4
			10	16
96906	MS35308-334	5306-00-021-3912	24	3
96906	MS35308-338	5306-00-021-4065	24	3
96906	MS35308-360	5305-00-680-4262	22	7
96906	MS35333-110	5310-00-022-8847	30	5
96906	MS35333-113	5310-00-042-4229	8	2
96906	MS35335-60	5310-00-209-1239	19	9
96906	MS35338-103	5310-00-184-8971	30	4
96906	MS35338-135	5310-00-933-8118	3	21
96906	MS35338-137	5310-00-933-8119	3	9
			5	3
96906	MS35338-138	5310-00-933-8120	15	2

SECTION IV

CROSS-REFERENCE INDEXES
PART NUMBER INDEX

CAGEC	PART NUMBER	STOCK NUMBER	FIG.	ITEM
96906	MS35338-139	5310-00-933-8121	4	2
			10	15
			14	2
96906	MS35338-140	5310-00-974-6623	24	1
96906	MS35338-141	5310-00-984-7042	22	5
			29B	24
96906	MS35338-143	5310-01-180-7157	1	1
96906	MS35338-158	5310-00-883-9417	30	8
96906	MS35387-1	9905-00-205-2795	31	4
96906	MS35387-2	9905-00-202-3639	31	5
96906	MS35425-75	5310-01-078-5996	30	1
96906	MS35691-3	5310-00-989-0908	30	7
96906	MS35649-204	5310-00-934-9760	15	1
96906	MS35649-2254	5310-00-250-9477	14	1
96906	MS35649-2382	5310-00-056-3395	3	1
			18	1
96906	MS35649-244	5310-00-934-9748	3	20
96906	MS35650-302	5310-00-934-9751	8	4
96906	MS35650-3254	531000-400-5503	4	1
			10	14
96906	MS35650-3314	5310-00-252-8748	24	1
96906	MS35650-3384	5310-00-245-3612	22	4
96906	MS35691-35	5310-00-989-5945	8	1
96906	MS35842-11	4730-00-908-3194	20	4
96906	MS35930-2	4820-00-277-1765	21	6
96906	MS39347-2	5940-00-021-3321	30	10
96906	MS393474		8	3
96906	MS51412-21		8	7
			10	4
			25	4
96906	MS51412-25	5310-00-044-6477	23	2
			24	2
			25	11
			27	3
			28	2
			29	2
96906	MS51412-27		3	2
			18	2
			25	17
96906	MS514124		31	2
96906	MS51412-9	5310-01-266-4641	1	2
96906	MS51415-3	5310-00-043-1680	8	5
			10	2
			25	2
96906	MS51519-B5/A5		21	5
96906	MS51520A5Z		21	9
96906	MS518584	5310-01-421-960B	8	8
96906	MS518594	5310-00-213-4960	8	9
96906	MS51860-54	4730-01-020-5607	21	7
96906	MS51922-1	5310-00-088-1251	21	1
			31	1

CROSS-REFERENCE INDEXES

PART NUMBER INDEX

CAGEC	PART NUMBER	STOCK NUMBER	FIG.	ITEM
96906	MS51922-17	5310-00-087-4652	25	15
			26	1
			26	8
			31	6
			32	1
96906	MS51922-33	5310-00-225-6993	1	1
96906	MS51922-9	5310-00-984-3806	23	1
			24	1
			25	10
			27	2
			28	1
			29	1
96906	MS51926-3	5340-00-078-7029	25	7
96906	MS51939-3	5340-00-229-0340	25	5
96906	MS51957-18	5305-00-054-5652	3	22
96906	MS51957-45	5305-00-054-6670	5	1
96906	MS51957-46	5305-00-054-6671	3	7
			8	10
96906	MS51958-64	5305-00-059-3660	15	3
96906	MS51971-5	5310-00-768-0321	1	1
19099	MS52103-2		21	12
96906	MS52103A050400R		21	10
96906	MS90555C32413SY		9	7
96906	MS90557C32413SY	5935-01-154-2472	2	4
96906	MS90558C32413PY		10	12
96906	MS90563-3C	5935-00-114-8061	8	16
96906	MS90564-3C	5935-00-114-5781	10	13
81349	M22759/16-16-9	6145-01-044-8799	BULK	17
81349	M22759/16-20-9	6145-01-042-4621	BULK	14
81349	M23053/5-104-4	5970-00-787-2325	BULK	10
81349	M23053/5-105-4	5970-00-052-4877	BULK	11
81349	M23053/5-107-9	5970-00-740-2971	BULK	7
81349	M23053/5-108-4		BULK	9
81349	M23053/5-108-9	5970-00-082-3948	BULK	8
81349	M23053/5-112-0	5970-00-944-1328	BULK	6
81349	M24243/1-B604	5320-00-493-4101	20	7
81349	M24768/2-S-7		BULK	13
81349	M39029/49-329	5999-00-014-0952	2	6
81349	M39029/49-331	5999-01-091-3187	2	5
81349	M45938/1-13C		5	14
81349	M5086/2-4-9	6145-00-578-6595	BULK	16
81349	M5086/2-6-9	6145-00-578-6594	BULK	15
81349	M6000F00200		BULK	4
			20	5
45225	P74-144	5120-01-013-1676	19	13
81348	QQW343C06B1B	6145-01-226-9164	BULK	18
			19	21
			20	3
81349	TBJA		5	13
19207	12450001		33	6B
97403	13200E6361		19	11

CROSS-REFERENCE INDEXES

PART NUMBER INDEX

CAGEC	PART NUMBER	STOCK NUMBER	FIG.	ITEM
97403	13200E6363		19	8
97403	13205E4918		33	2
97403	13211E7541	5340-00-066-1235	19	1
97403	13211E7542	4710-00-597-8731	19	2
97403	13211E7543	4710-00-185-6948	19	3
97403	13211E7544		19	4
97403	13211E7546	5330-00-402-5125	19	5
97403	13211E7547		19	10
97403	13211E7548		19	12
97403	13214E1206-1		32	4
97403	13214E1206-2		32	4
97403	13214E1207		32	7
97403	13214E1208-1		32	10
97403	13214E1209	5315-01-162-0143	32	6
97403	13214E1210		32	12
97403	13214E1211		32	11
97403	13214E1212-1	2590-01-167-8596	32	13
97403	13214E1223	5307-00-227-1741	30	6
97403	13214E1235	4210-00-223-4857	22	8
			25	18
			26	11
97403	13214E1258		33	6
97403	13214E1259		23	4
97403	13214E1261		23	5
97403	13214E1263	2510-01-195-4273	25	13
97403	13214E1264	2510-01-213-3242	25	14
97403	13214E1267-1	5365-00-944-269228	4	
97403	13214E1268		28	3
97403	13214E1269		27	6
97403	13214E1270		27	5
97403	13214E1271		27	1
97403	13214E1272	5365-00-989-3304	27	7
97403	13214E1391	6210-00-900-9423	7	1
97403	13214E1461	2330-01-150-9864	28	7
97403	13214E1462	2510-01-196-4682	28	8
97403	13214E9975-1		25	6
19099	13214E9975-1-3		25	9
97403	13226E5806-2		17	1
97403	13229E5640-TLR		22	2
97403	13229E5666-16		20	8
97403	13229E5666-17		20	8
97403	13229E5666-18		20	8
97403	13229E5666-5		20	8
97403	13229E5666-6		20	8
97403	13229E5674		2	1
19099	13229E5674-2		2	8
19099	13229E5674-3		2	2
19099	13229E5674-4		2	3
97403	13229E5728-2		3	11
19099	13229E5735-16		20	3
19099	13229E5735-25		20	5
97403	13229E5744		26	4

CROSS-REFERENCE INDEXES

PART NUMBER INDEX

CAGEC	PART NUMBER	STOCK NUMBER	FIG.	ITEM
97403	13229E5757		33	6A
97403	13229E5758		31	9
97403	13229E5788-1		10	18
97403	13229E5792-1		3	19
97403	13229E5793-1		5	15
97403	13229E5793-2		5	16
97403	13229E5795-1		3	4
19099	13229E5795-1-65		4	8
19099	13229E5795-1-67		8	12
19099	13229E5795-1-68		8	13
19099	13229E5795-1-69		8	14
19099	13229E5795-1-70		8	15
97403	13229E5796-1		3	26
19099	13229E5796-1-15		3	29
97403	13229E5800-1		12	1
19099	13229E5800-1-10		12	9
19099	13229E5800-1-2		12	7
19099	13229E5800-1-6		12	6
97403	13229E5801-1		3	12
97403	13229E5802		5	4
19099	13229E5802-10		5	11
19099	13229E5802-4		5	8
97403	13229E5804		3	10
97403	13229E5805		5	12
97403	13229E5806-1		11	1
19099	13229E5806-1-2		11	5
19099	13229E5806-1-5		11	4
19099	13229E5806-2-2		17	5
19099	13229E5806-2-5		17	4
97403	13229E5807-1		8	11
97403	13229E5808-1		9	1
19099	13229E5808-1-3		9	6
19099	13229E5808-1-4		9	5
19099	13229E5808-1-8		9	4
97403	13229E5808-2		10	5
19099	13229E5808-2-3		10	11
19099	13229E5808-2-4		10	10
19099	13229E5808-2-8		10	9
97403	13229E5810-1		13	11
19099	13229E5810-1-1		13	14
97403	13229E5810-1-10		13	15
97403	13229E5810-11		13	16
19099	13229E5810-11-1		13	19
97403	13229E5810-11-10		13	20
97403	13229E5810-12		13	21
19099	13229E5810-12-1		13	24
97403	13229E5810-12-10		13	25
97403	13229E5810-13		13	26
19099	13229E5810-13-1		13	29
97403	13229E5810-13-10		13	30
97403	13229E5810-2		13	6
19099	13229E5810-2-1		13	9

CROSS-REFERENCE INDEXES

PART NUMBER INDEX

CAGEC	PART NUMBER	STOCK NUMBER	FIG.	ITEM
97403	13229E5810-2-10		13	10
97403	13229E5810-3		13	1
19099	13229E5810-3-1		13	5
19099	13229E5810-3-10		13	4
97403	13229E5811-1		16	1
19099	13229E5811-1-1		16	4
19099	13229E5811-1-4		16	3
97403	13229E5811-2		16	5
19099	13229E5811-2-1		16	8
19099	13229E5811-2-4		16	7
97403	13229E5811-3		16	9
19099	13229E5811-3-1		16	12
19099	13229E5811-3-4		16	11
97403	13229E5811-4		16	13
19099	13229E5811-4-1		16	16
19099	13229E5811-4-4		16	15
97403	13229E5811-5		16	17
19099	13229E5811-5-1		16	20
19099	13229E5811-5-4		16	19
97403	13229E5815		10	19
97403	13229E5816-1		14	4
97403	13229E5834		3	17
97403	13229E5835		3	16
97403	13229E5837		6	1
19099	13229E5837-2		6	5
19099	13229E5837-3		6	4
97403	13229E6108		29	4
97403	13229E7946		24	4
97403	13229E9621-3		26	7
97403	13229E9622		26	5
19099	13229E9622-3		26	6
97403	13229E9632		22	1
97403	13229E9630		11	16
97403	13229E9632		22	1
97403	13230E4592		18	4
30554	13230E6514		33	4
30554	13230E6524		33	5
30554	13230E6526		29B	10
30554	13230E6527		29B	6
30554	13230E6550-26		20	5
30554	13230E6551		20	8
30554	13230E6564-1		29A	4
30554	13230E6564-2		29A	6
30554	13230E6565		22	3
30554	13230E6567-1		29A	3
30554	13230E6567-2		29A	5
30554	13230E6568		29A	2
30554	13230E6569-1		29B	3
30554	13230E6569-2		29B	4
30554	13230E6571-1		29B	14
30554	13230E6571-2		29B	15
30554	13230E6572		33	2A

CROSS-REFERENCE INDEXES

PART NUMBER INDEX

CAGEC	PART NUMBER	STOCK NUMBER	FIG.	ITEM
30554	13230E6576		29B	7
30554	13230E6577		29B	9
30554	13230E6578-1		29B	11
30554	13230E6578-2		29B	12
30554	13230E6579		29B	19
30554	13230E6580-1		29B	22
30554	13230E6580-2		29B	23
30554	13230E6582-1		29B	17
30554	13230E6582-2		29B	18
30554	13230E6583-1		29B	20
30554	13230E6583-2		29B	21
72619	181-0931-001		7	2
72619	181-8836-09-553	6210-01-230-1851	7	4
59730	2G4-2		4	7
88900	22806-000-00		BULK	2
00141	4328	5305-00-841-2681	19	7
93742	69-539-2	4730-00-812-1333	21	4
04655	70-801074	5999-00-186-3912	19	19
30554	72-2135	5340-01-277-5068	4	6
30554	88-804		1	4A
30554	88-814		1	4

CROSS-REFERENCE INDEXES

FIGURE AND ITEM NUMBER INDEX

FIG.	ITEM	STOCK NUMBER	CAGEC	PART NUMBER
BULK	1		81349	CO-04HDE(4/4-4/12R)1290
BULK	2		88900	22806-000-00
BULK	3		96906	MS21266-2N
BULK	4		81349	M6000F00200
BULK	5		01276	FC173-5
BULK	6	5970-00-944-1328	81349	M23053/5-112-0
BULK	7	5970-00-740-2971	81349	M23053/5-107-9
BULK	8	5970-00-082-3948	81349	M23053/5-108-9
BULK	9		81349	M23053/5-108-4
BULK	10	5970-00-787-2325	81349	M23053/5-104-4
BULK	11	5970-00-052-4877	81349	M23053/5-105-4
BULK	12	4020-00-928-3438	88001	C1832
BULK	13		81349	M24768/2-S-7
BULK	14	6145-01-042-4621	81349	M22759/16-2C-9
BULK	15	6145-00-578-6594	81349	M5086/2-6-9
BULK	16	6145-00-578-6595	81349	M5086/2-4-9
BULK	17	6145-01-044-8799	81349	M22759/16-16-9
BULK	18	6145-01-226-9164	81348	QQW343C06B1B
1	1	5310-00-225-6993	96906	MS51922-33
1	1	5310-00-768-0321	96906	MS51971-5
1	1	5310-01-180-7157	96906	MS35338-143
1	2	5310-01-266-4641	96906	MS51412-9
1	2	5310-00-614-3506	96906	MS15795-817
1	3	5305-00-071-2070	80204	B1821BH050C175N
1	3	5305-00-727-6804	96906	MS35307-414
1	4		30554	88-814
1	4		30554	88-804
2	1		97403	13229E5674
2	2		19099	13229E5674-3
2	3		19099	13229E5674-4
2	4	5935-01-154-2472	96906	MS90557C32413SY
2	5	5999-01-091-3187	81349	M39029/49-331
2	6	5999-00-014-0952	81349	M39029/49-329
2	7	5999-01-167-0838	96906	MS3348-6-8L
2	8		19099	13229E5674-2
3	1	5310-00-056-3395	96906	MS35649-2382
3	2		96906	MS51412-27
3	3	5305-00-688-2111	80204	B1821BH038C138N
3	4		97403	13229E5795-1
3	5	5320-00-582-3502	96906	MS20601AD4W4
3	6	5340-00-975-2126	96906	MS18015-1
3	7	5305-00-054-6671	96906	MS51957-46
3	8	5310-00-880-5978	96906	MS15795-807
3	9	5310-00-933-8119	96906	MS35338-137
3	10		97403	13229E5804
3	11		97403	13229E5728-2
3	12		97403	13229E5801-1
3	13	5320-00-582-3305	96906	MS20600AD4W3
3	14	5340-00-975-2126	96906	MS18015-1
3	15	5320-00-005-6279	96906	MS20470AD4-4-5
3	16		97403	13229E5834
3	17		97403	13229E5834
3	18	5320-00-582-3304	96906	MS20600AD4W2

CROSS-REFERENCE INDEXES

FIGURE AND ITEM NUMBER INDEX

FIG.	ITEM	STOCK NUMBER	CAGEC	PART NUMBER
3	19		97403	13229E5792-1
3	20	5310-00-934-9748	97403	MS35649-244
3	21	5310-00-933-8118	96906	MS35338-135
3	22	5305-00-054-96906	96906	MS51957-18
3	23	5310-01-141-6672	88044	AN960-C4
3	24	5935-01-175-8419	96906	MS25043-18DA
3	25	5975-00-074-2072	96906	MS3367-1-9
3	26		97403	13229E5796-1
3	27		96906	MS27130-96
3	28		96906	MS27130-93
3	29		19099	13229E5796-1-15
4	1	5310-00-400-5503	96906	MS35650-3254
4	2	5310-00-933-8121	96906	MS35338-139
4	3		96906	MS15795-852
4	4	5305-00-685-3511	96906	MS35308-306
4	5	5120-01-019-9564	12670	CLE-403001
4	6	5340-01-277-5068	30554	72-2135
4	7		59730	2G4-2
4	8		19099	13229E5795-1-65
4	9	5940-00-115-2678	96906	MS20659-111
5	1	5305-00-054-6670	96906	MS51957-45
5	2	5310-00-880-5978	96906	MS15795-807
5	3	5310-00-933-8119	96906	MS35338-137
5	4		97403	13229E5802
5	5	5310-00-982-6814	96906	MS21044C08
5	6		96906	MS24693-C52
5	7	5340-00-078-3615	96906	MS21322-33
5	8		19099	13229E5802-4
5	9		96906	MS27407-3
5	10	5940-00-143-4774	96906	MS25036-153
5	11		19099	13229E5802-10
5	12		97403	13229E5805
5	13		81349	TBJA
5	14		81349	M45938/1-13C
5	15		97403	13229E5793-1
5	16		97403	13229E5793-2
6	1		97403	13229E5837
6	2	5975-00-074-2072	96906	MS3367-1-9
6	3	5940-00-813-0698	96906	MS25036-101
6	4		19099	13229E5837-3
6	5		19099	13229E5837-2
6	6		96906	MS3106R20-27P
7	1	6210-00-900-9423	97403	13214E1391
7	2		72619	181-0931-001
7	3		58224	G9B (GR)
7	4	6210-01-230-1851	72619	181-8836-09-553
8	1	5310-00-989-5945	96906	MS35691-35
8	2	5310-00-042-4229	96906	MS35333-113
8	3		96906	MS39347-4
8	4	5310-00-934-9751	96906	MS35650-302
8	5	5310-00-043-1680	96906	MS51415-3
8	6	5305-00-993-1851	96906	MS35207-267

CROSS-REFERENCE INDEXES

FIGURE AND ITEM NUMBER INDEX

FIG.	ITEM	STOCK NUMBER	CAGEC	PART NUMBER
8	7		96906	MS51412-21
8	8	5310-00-421-9608	96906	MS51858-4
8	9	5310-00-213-4960	96906	MS51859-4
8	10	5305-00-054-6671	96906	MS51957-46
8	11		97403	13229E5807-1
8	12		19099	13229E5795-1-67
8	13		19099	13229E5795-1-68
8	14		19099	13229E5795-1-69
8	15		19099	13229E5795-1-70
8	16	5935-00-114-8061	96906	MS90563-3C
9	1		97403	13229E5808-1
9	2	5940-00-557-4344	96906	MS25036-120
9	3	5940-00-115-4996	96906	MS20659-145
9	4		19099	13229E5808-1-8
9	5		19099	13229E5808-1-4
9	6		19099	13229E5808-1-3
9	7		96906	MS90555C32413SY
10	1	5310-00-934-9751	96906	MS35650-302
10	2	5310-00-043-1680	96906	MS51415-3
10	3	5305-00-993-1851	96906	MS35207-267
10	4		96906	MS51412-21
10	5		97403	13229E5808-2
10	6	5940-00-557-4344	96906	MS25036-120
10	7	5940-00-115-4996	96906	MS20659-145
10	8	5940-00-557-4338	96906	MS25036-125
10	9		19099	13229E5808-2-8
10	10		19099	13229E5808-2-4
10	11		19099	13229E5808-2-3
10	12		96906	MS90558C32413PY
10	13	5935-00-114-5781	96906	MS90564-3C
10	14	5310-00-400-5503	96906	MS35650-3254
10	15	5310-00-933-8121	96906	MS35338-139
10	16	5305-00-685-3511	96906	MS35308-306
10	17		96906	MS15795-852
10	18		97403	13229E5788-1
10	19		97403	13229E5815
11	1		97403	13229E5806-1
11	2	5940-00-230-0515	96906	MS25036-154
11	3	5940-00-113-8179	96906	MS25036-107
11	4		19099	13229E5806-1-5
11	5		19099	13229E5806-1-2
11	6	5935-00-852-9611	96906	MS3102R18-11P
12	1		97403	13229E5800-1
12	2	5975-00-074-2072	96906	MS3367-1-9
12	3	5940-00-283-5280	96906	MS25036-106
12	4	5940-00-660-3633	96906	MS25036-155
12	5	5940-00-143-4793	96906	MS25036-110
12	6		19099	13229E5800-1-6
12	7		19099	13229E5800-1-2
12	8		96906	MS3100R20-27S
12	9		19099	13229E5800-1-10

CROSS-REFERENCE INDEXES

FIGURE AND ITEM NUMBER INDEX

FIG.	ITEM	STOCK NUMBER	CAGEC	PART NUMBER
13	1		97403	13229E5810-3
13	2	5940-00-115-4996	96906	MS20659-145
13	3	5940-00-557-4338	96906	MS25036-125
13	4		19099	13229E5810-3-10
13	5		19099	13229E5810-3-1
13	6		97403	13229E5810-2
13	7	5940-00-115-4996	96906	MS20659-145
13	8	5940-00-557-4338	96906	MS25036-125
13	9		19099	13229E5810-2-1
13	10		97403	13229E5810-2-10
13	11		97403	13229E5810-1
13	12	5940-00-115-4996	96906	MS20659-145
13	13	5940-00-557-4338	96906	MS25036-125
13	14		19099	13229E5810-1-1
13	15		97403	13229E5810-1-10
13	16		97403	13229E5810-11
13	17	5940-00-115-4996	96906	MS20659-145
13	18	5940-00-557-4338	96906	MS25036-125
13	19		19099	13229E5810-11-1
13	20		97403	13229E5810-11-10
13	21		97403	13229E5810-12
13	22	5940-00-115-4996	96906	MS20659-145
13	23	5940-00-557-4338	96906	MS25036-125
13	24		19099	13229E5810-12-1
13	25		97403	13229E5810-12-10
13	26		97403	13229E5810-13
13	27	5940-00-115-4996	96906	MS20659-145
13	28	5940-00-557-4338	96906	MS25036-125
13	29		19099	13229E5810-13-1
13	30		97403	13229E5810-13-10
14	1	5310-00-250-9477	96906	MS35649-2254
14	2	5310-00-933-8121	96906	MS35338-139
14	3		96906	MS15795-852
14	4		97403	13229E5816-1
14	5	5340-00-291-3484	96906	MS124696
14	6	5305-00-052-1457	96906	MS35308-3
15	1	5310-00-934-9760	96906	MS35649-204
15	2	5310-00-933-8120	96906	MS35338-138
15	3	5305-00-059-3660	96906	MS51958-64
15	4		96906	MS15795-857
15	5		7E656	JCG-6026
16	1		97403	13229E5811-1
16	2	5940-00-557-4338	96906	MS25036-125
16	3		19099	13229E5811-1-4
16	4		19099	13229E5811-1-1
16	5		97403	13229E5811-2
16	6	5940-00-557-4338	96906	MS25036-125
16	7		19099	13229E5811-2-4
16	8		19099	13229E5811-2-1
16	9		97403	13229E5811-3
16	10	5940-00-557-4338	96906	MS25036-125

CROSS-REFERENCE INDEXES

FIGURE AND ITEM NUMBER INDEX

FIG.	ITEM	STOCK NUMBER	CAGEC	PART NUMBER
16	11		19099	13229E5811-3-4
16	12		19099	13229E5811-3-1
16	13		97403	13229E5811-4
16	14	5940-00-115-4996	96906	MS20659-145
16	15		19099	13229E5811-4-4
16	16		19099	13229E5811-4-1
16	17		97403	13229E5811-5
16	18	5940-00-557-4341	96906	MS25036-123
16	19		19099	13229E5811-5-4
16	20		19099	13229E5811-5-1
17	1		97403	13226E5806-2
17	2	5940-00-230-0515	96906	MS25036-154
17	3	5940-00-113-8179	96906	MS25036-107
17	4		19099	13229E5806-2-5
17	5		19099	13229E5806-2-2
17	6	5935-01-035-5139	96906	NS3456W18-11S
18	1	5310-00-056-3395	96906	MS35649-2382
18	2		96906	MS51412-27
18	3	5305-00-688-2111	80204	B1821BH038C138N
18	4		97403	13230E4592
19	1	5340-00-066-1235	06076	13211E7541
19	2	4710-00-597-8731	97403	13211E7542
19	3	4710-00-185-6948	97403	13211E7543
19	4		97403	13211E7544
19	5	5330-00-402-5125	97403	13211E7546
19	6	4730-00-277-5115	88044	AN816-5-4
19	7	5305-00-841-2681	00141	4328
19	8		97401	13200E6363
19	9	5310-00-209-1239	96906	MS35335-60
19	10		97403	13211E7547
19	11		97403	13200E6361
19	12		97403	13211E7548
19	13	5120-01-013-1676	97403	P74-144
19	14		81348	GGG-H-46 TY10CL1
19	15	5975-00-878-3791	15277	FS0216B122-1
19	16		56681	HLP1053A
19	17		OBKK8	GRC 58
19	18	5975-00-924-9927	73616	GRB58
19	19	5999-00-186-3912	04655	70-801074
19	20	5940-00-271-9504	01667	CBA-70
19	21	6145-01-226-9164	81348	QQW343C06B1B
20	1	4210-00-202-7858	58536	A-A-1106
20	2	5940-00-113-8190	96906	MS25036-122
20	3	6145-00-226-9164	81348	QQW343C06B1B
20	4	4730-00-908-3194	96906	MS35842-11
20	5	4720-01-386-4210	81349	M6000F00200
20	6	4730-00-809-9703	96906	MS24519-9
20	7	5320-00-493-4101	81349	M24243/1-B604
20	7	5320-00-052-1972	07707	AD45ABS
20	8		30554	13230E6551
20	8		97403	13230E5666-6

CROSS-REFERENCE INDEXES

FIGURE AND ITEM NUMBER INDEX

FIG.	ITEM	STOCK NUMBER	CAGEC	PART NUMBER
20	8		97403	13230E5666-16
20	8		97403	13230E5666-18
20	8		97403	13230E5666-17
20	8		97403	13230E5666-5
21	1	5310-00-088-1251	96906	MS51922-1
21	2		96906	MS15795-852
21	3	5305-00-988-1727	96906	MS35206-283
21	4	4730-00-812-1333	93742	69-539-2
21	5		96906	MS51519-B5/A5
21	6	4820-00-277-1765	96906	MS35930-2
21	7	4730-01-020-5607	96906	MS51860-54
21	8	5310-00-809-5997	96906	MS27183-17
21	9		96906	MS51520B5Z
21	10		96906	MS52103A050400R
21	11	4730-00-842-2201	96906	MS24587-5
21	12		19099	MS52103-2
22	1		97403	13229E9632
22	2		19099	13229E5640-TLR
22	3		30554	13230E6565
22	4	5310-00-245-3612	96906	MS35650-3384
22	5	5310-00-984-7042	96906	MS35338-141
22	6	5310-00-802-4701	96906	MS15795-813
22	7	5305-00-680-4262	96906	MS35308-360
22	8		97403	13214E1235
23	1	5310-00-984-3806	96906	MS51922-9
23	2	5310-00-044-6477	96906	MS51412-25
23	3	5306-00-226-4829	80204	B1821BH031C125N
23	4		97403	13214E1259
23	5		97403	13214E1261
23	6	5310-00-984-3806	96906	MS51922-9
24	1	5310-00-984-3806	96906	MS51922-9
24	1	5310-00-252-8748	96906	MS35650-3314
24	1	5310-00-974-6623	96906	MS35338-140
24	2	5310-00-044-6477	96906	MS51412-25
24	2	5310-00-625-5756	96906	MS15795-812
24	3	5306-00-226-4827	80204	B1821BH031C100N
24	3	5306-00-226-4829	80204	B1821BH031C125N
24	3	5306-00-021-3912	96906	MS35308-334
24	3	5306-00-021-4065	96906	MS35308-338
24	4		97403	13229E7946
24	5	5320-00-753-3830	96906	MS20613-4P5
24	6	5340-00-975-2126	96906	MS18015-1
24	7		96906	MS20427-4C6
24	8	5340-00-234-8422	96906	MS27969-4
25	1	5310-00-934-9751	96906	MS35650-302
25	2	5310-00-043-1680	96906	MS51415-3
25	3	5305-00-984-7341	96906	MS35191-273
25	4		96906	MS51412-21
25	5	5340-00-229-0340	96906	MS51939-3
25	6		97403	13214E9975-1
25	7	5340-00-078-7029	96906	MS51926-3
25	8		81349	MIL-B-543TYII,STYI,CL3

CROSS-REFERENCE INDEXES

FIGURE AND ITEM NUMBER INDEX

FIG.	ITEM	STOCK NUMBER	CAGEC	PART NUMBER
29	9		19099	13214E9975-1-3
25	10	5310-00-984-3806	96906	MS51922-9
25	11	5310-00-044-6477	96906	MS51412-25
25	12	5306-00-226-4829	80204	B1821BH031C125N
25	13	2510-01-195-4273	97403	13214E1263
25	14	2510-01-213-3242	97403	13214E1264
25	15	5310-00-087-4652	96906	MS51922-17
25	16	5305-00-543-4372	80204	B1821BH038C075N
25	17		96906	MS51412-27
25	18		97403	13214E1235
26	1	5310-00-087-4652	96906	MS51922-17
26	2	5310-01-280-5796	96906	MS27183-57
26	3	5305-00-068000511	80204	B1821BH038C125N
26	4		97403	13229E5744
26	5		97403	13229E9622
26	6		19099	13229E9622-3
26	7		97403	13229E9621-3
26	8	5310-00-087-4652	96906	MS51922-17
26	9	5305-00-543-4372	80204	B1821BH038C075N
26	10	5310-01-280-5796	96906	MS27183-57
26	11	4210-00-223-4857	97403	13214E1235
27	1		97403	13214E1271
27	2	5310-00-984-3806	96906	MS51922-9
27	3	5310-00-044-6477	96906	MS51412-25
27	4	5306-00-226-4829	80204	B1821BH031C125N
27	5		97403	13214E1270
27	6		97403	13214E1269
27	7	5365-00-989-3304	97403	13214E1272
28	1	5310-00-984-3806	96906	MS51922-9
28	2	5310-00-044-6477	96906	MS51412-25
28	3		97403	13214E1268
28	4	5365-00-944-2692	97403	13214E1267-1
28	5	5306-00-226-4832	80204	B1821BH031C175N
28	6	5306-00-226-4829	80204	B1821BH031C125N
28	7	2330-01-150-9864	97403	13214E1461
28	8	2410-01-196-4682	97403	13214E1462
29	1	5310-00-984-3806	96906	MS51922-9
29	2	5310-00-044-6477	96906	MS51412-25
29	3	5306-00-226-4829	80204	B1821BH031C125N
29	4		97403	13229E6108
29A	1		17446	MGLP-R8-10
29A	2		30554	13230E6568
29A	3		30554	13230E6567-1
29A	4		30554	13230E6564-1
29A	5		30554	13230E6567-2
29A	6		30554	13230E6564-2
29B	1	5320-00-483-0558	9K475	BOM-R8-8
29B	2	5320-01-140-1479	9K475	BOM-R8-10
29B	3		30554	13230E6569-1
29B	4		30554	13230E6569-2
29B	5		17446	MGL100-R6-9
29B	6		30554	13230E6527

CROSS-REFERENCE INDEXES

FIGURE AND ITEM NUMBER INDEX

FIG.	ITEM	STOCK NUMBER	CAGEC	PART NUMBER
29B	7		30554	13230E6576
29B	8		17446	MGLP-R8-10
29B	9		30554	13230E6577
29B	10		30554	13230E6526
29B	11		30554	13230E6578-1
29B	12		30554	13230E6578-2
29B	13		17446	MGLP-R8-6
29B	14		30554	13230E6571-1
29B	15		30554	13230E6571-2
29B	16		17446	MGLP-R8-6
29B	17		30554	13230E6582-1
29B	18		30554	13230E6582-2
29B	19		30554	13230E6579
29B	20		30554	13230E6583-1
29B	21		30554	13230E6583-2
29B	22		30554	13230E6580-1
29B	23		30554	13230E6580-2
29B	24	5310-00-984-7042	96906	MS35338-141
29B	25	5310-00-802-4701	96906	MS15795-813
29B	26	5975-00-984-6582	96906	MS3367-1-0
30	1	5310-01-078-5996	96906	MS35425-75
30	2	5310-00-187-2413	88044	AN961-616
30	3	5310-00-584-7995	96906	MS16203-27
30	4	5310-00-184-8971	96906	MS35338-103
30	5	5310-00-022-8847	96906	MS35333-110
30	6	5307-00-227-1741	97403	13214E1223
30	7	5310-00-989-0908	96906	MS35691-3
30	8	5310-00-883-9417	96906	MS35338-158
30	9	5310-00-582-5677	96906	MS15795-810
30	10	5940-00-021-3321	96906	MS39347-2
31	1	5310-00-088-1251	96906	MS51922-1
31	2		96906	MS51412-4
31	3	5305-00-071-2505	80204	B1821BH025C088N
31	4	9905-00-205-2795	96906	MS35387-1
31	5	9905-00-202-3639	96906	MS35387-2
31	6	5310-00-087-4652	96906	MS51922-17
31	7	5305-00-638-8920	80204	B1821BH038C225N
31	8	5310-01-280-5796	96906	MS27183-57
31	9		97403	13229E5758
32	1	5310-00-087-4652	96906	MS51922-17
32	2	5310-01-280-5796	96906	MS27183-57
32	3	5305-00-071-2067	80204	B1821BHO50C125N
32	3A		17446	BOM-R12-8
32	4		30554	13214E1206-2
32	4		97403	13214E1206-1
32	5	5315-00-839-5822	96906	MS24665-353
32	6	5315-01-162-0143	97403	13214E1209
32	7		96403	13214E1207
32	8	4730-00-172-0049	96906	MS15006-1
32	9	5315-00-838-4584	96906	MS16562-66
32	10		97403	13214E1208-1
32	11		97403	13214E1211

CROSS-REFERENCE INDEXES

FIGURE AND ITEM NUMBER INDEX

FIG.	ITEM	STOCK NUMBER	CAGEC	PART NUMBER
32	12		97403	13214E1210
32	13	2590-01-167-8596	97403	13214E1212-1
33	1	5320-00-052-1972	07707	AD45ABS
33	2		97403	13205E4918
33	2A		30554	13230E6572
33	3	5320-00-483-0558	17446	BOM-R8-8
33	4		30554	13230E6514
33	5		30554	13230E6524
33	6		97403	13214E1258
33	6A		97403	13229E5757
33	6B		19207	12450001

APPENDIX G
ILLUSTRATED LIST OF MANUFACTURED ITEMS

G-1. INTRODUCTION.

This appendix includes complete instructions for making items authorized to be manufactured or fabricated at unit maintenance level and direct support maintenance level.

A part number index in alphanumeric order is provided for cross-referencing the part number of the item to be manufactured to the figure which covers fabrication criteria.

All bulk materials needed for manufacture of an item are listed by part number or specification number in a tabular list on the illustration.

G-2 MANUFACTURED ITEMS PART NUMBER INDEX.

Part Number of Manufactured Item	Applicable Figure
13229E5674	G-1
13229E5800	G-2
13229E5806	G-3
13229E5808	G-4
13229E5810	G-5
13229E5811	G-6
13229E5837	G-7
MS52103A050400R	G-8

G-3 GENERAL INSTRUCTIONS

The manufacture of items listed above consists of cutting wires to length specified on figures and soldering terminal lugs or connectors on appropriate wires. Use standard shop procedures in the manufacture of these items.

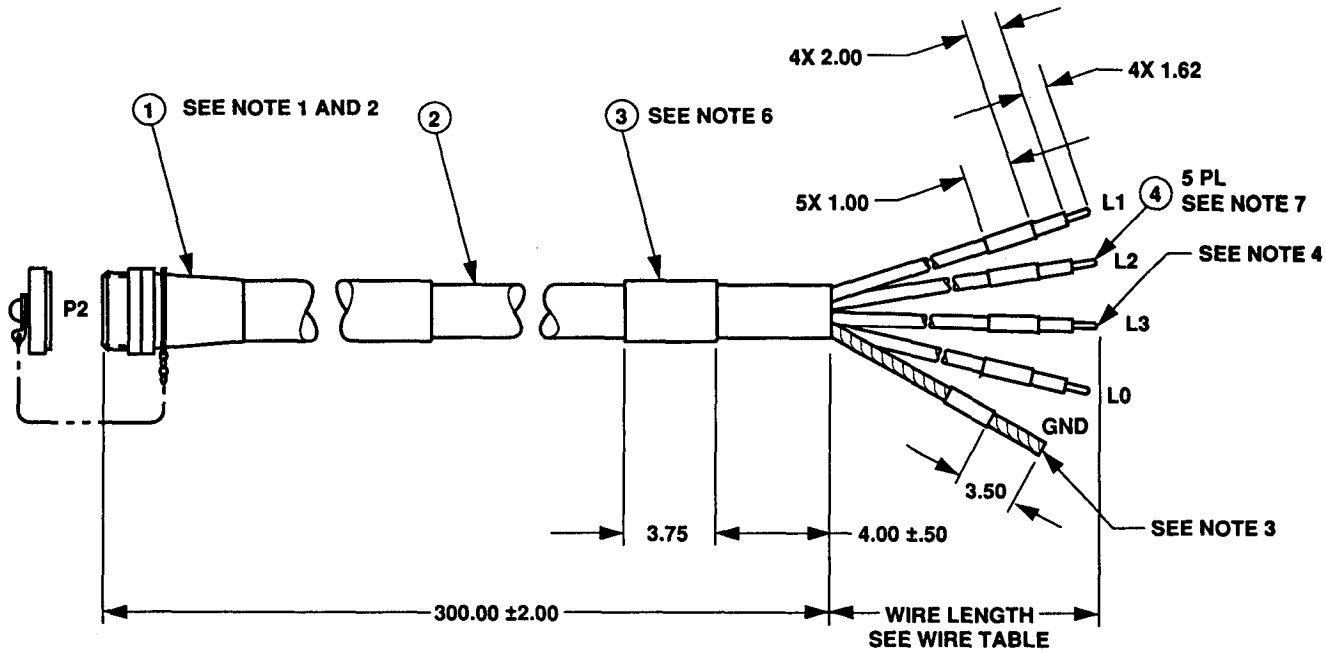

PARTS LIST

FIND NO.	PART NO.	QUANTITY REQUIRED	DESCRIPTION	SPECIFICATION
1	MS90557C32413SY	1	CONNECTOR, PLUG, ELECT, CABLE CONNECTING	
2	CO-04HDF(4/4-4/12R)1290	AR	CABLE, SEE NOTE 4	MIL-C-3432
3	M23053/5-112-4	1	INSULATION SLEEVING, HEAT SHRINKABLE, BLK	MIL-I-23053/5
4	M23053/5-107-4	5	INSULATION SLEEVING, HEAT SHRINKABLE, WHT	MIL-I-23053/5
5	Sn60Pb40	AR	SOLDER	QQ-S-571

Figure G-1. B Unit Cable Assembly W19 (Sheet 1 of 2).

NOTES:

1. CRIMP CONNECTIONS SHALL BE IN ACCORDANCE WITH MIL-E-45782.
2. AT CONNECTOR END OF CABLE, GROUNDING CONDUCTORS SHALL BE TWISTED TOGETHER TO FORM A SINGLE CONDUCTOR WHICH SHALL BE CRIMPED IN APPLICABLE CONTACT.
3. AT PIGTAIL END OF CABLE, THE FOUR 8 AWG GROUNDING CONDUCTORS SHALL BE TWISTED TOGETHER, STARTING AT THE JACKET. CONDUCTORS SHALL BE SOLDER COATED FOR A LENGTH OF .250 FROM END USING SOLDER, FIND NO. 5.
4. AT PIGTAIL END OF CABLE, EACH INSULATED CONDUCTOR SHALL HAVE THEIR INDIVIDUAL STRANDS TWISTED TOGETHER AND SOLDER COATED FOR A LENGTH OF .125 FROM END USING SOLDER, FIND NO. 5.
5. INSULATION COLORS, IN ACCORDANCE WITH WIRE TABLE, SHALL BE INCLUDED AS PART OF THE ORDERING DATA.
6. HOT STAMP "97403-13229E5674-" AND "W19" IN .23-.39 HIGH WHITE CHARACTERS ON INSULATION SLEEVING, FIND NO. 3, IN ACCORDANCE WITH MIL-M-60903.
7. HOT STAMP TERMINAL DESIGNATION, AS SHOWN IN WIRE TABLE, USING .09-.16 HIGH BLACK CHARACTERS, IN TWO PLACES (180° APART) ON INSULATION SLEEVING, FIND NO. 4, IN ACCORDANCE WITH MIL-M-60903.

WIRE LIST

TERMINATION		TERMINATION				
FROM	FIND NO.	TO SEE NOTE 7	FIND NO.	WIRE LENGTH +/- .50	WIRE COLOR SEE NOTE 5	AWG (REF)
P2-A	1	G2-L1	-	16.00	BLK	4
P2-B	1	G2-L2	-	19.50	RED	4
P2-C	1	G2-L3	-	23.00	BLU	4
P2-N	1	G2-L0	-	12.50	WHT	4
P2-G	1	G2-GND	-	9.00	GRN	12
						12
						12
						12

Figure G-1. B Unit Cable Assembly W19 (Sheet 2).

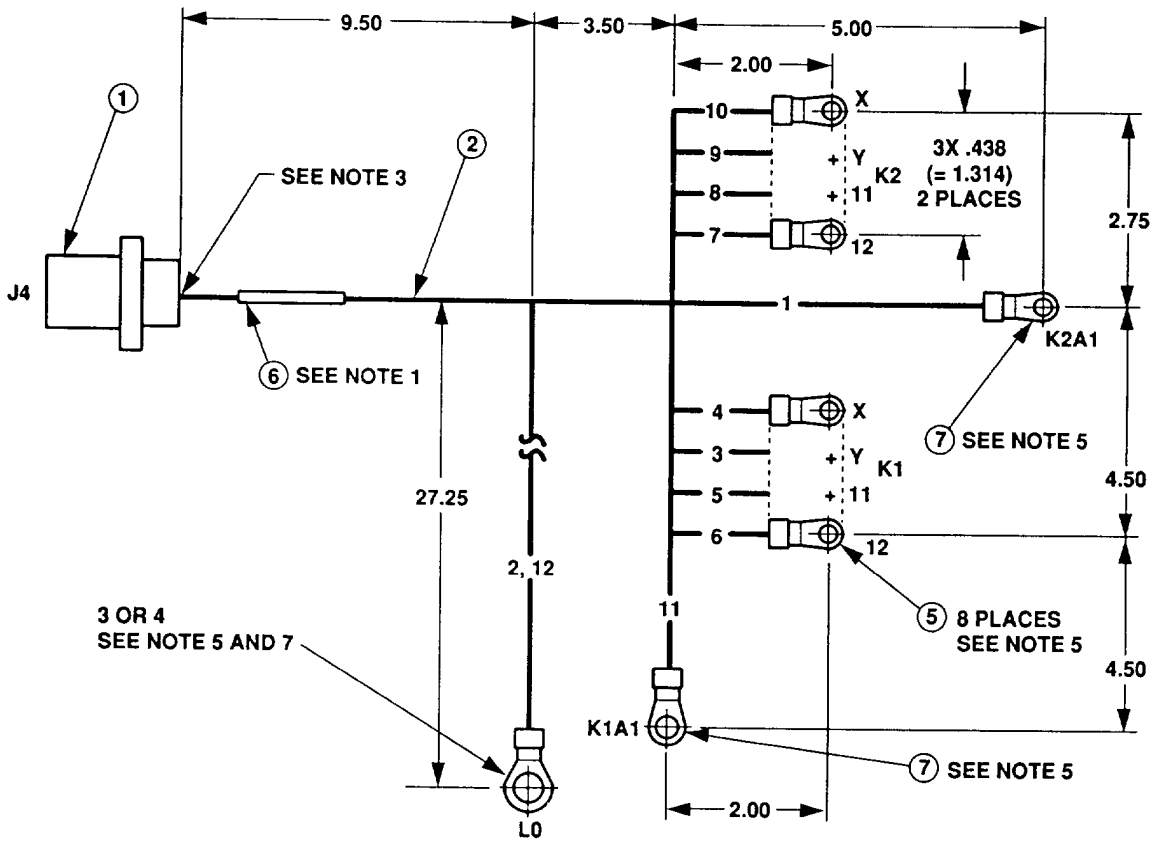

PARTS LIST

FIND NO.	PART NO.	QUANTITY REQUIRED -1	QUANTITY REQUIRED -2	DESCRIPTION	SPECIFICATION
1	MS3100R20-27S	1	1	CONNECTOR, RECEPTACLE, ELECTRICAL	
2	M22759/16-16-9	AR	AR	WIRE, ELECTRICAL, 16 AWG, WHT	MIL-W-22759/16
3	MS25036-155	1	-	TERMINAL LUG, 16-14 AWG, .500 STUD SIZE	
4	13229E5706-4	-	1	TERMINAL LUG, INSULATED	
5	MS25036-106	8	8	TERMINAL LUG, 16-14 AWG, .138 STUD SIZE	
6	M23053/5-108-4	1	1	INSULATION SLEEVING, HEAT SHRINKABLE, .500 ID X 2.50 LONG	MIL-I-23053/5
7	MS25036-110	2	2	TERMINAL LUG, 16-14 AWG, .375 STUD SIZE	
8	Sn60Pb40	AR	AR	SOLDER	QQ-S-571
9	MS3367-1-9	AR	AR	STRAP, TIE DOWN, ELECTRICAL	
10	M23053/5-105-4	12	12	INSULATION SLEEVING, HEAT SHRINKABLE, .187 ID X L AS REQUIRED	MIL-I-23053/5

Figure G-2. Control Wiring Harness W7 (Sheet 1 of 2).

NOTES:

1. HOT STAMP “W7” AND “97403-13229E5800-” WITH APPROPRIATE DASH NO. ON SLEEVING, FIND NO. 6 IN ACCORDANCE WITH MIL-M-60903. LOCATE APPROXIMATELY AS SHOWN.
2. HOT STAMP SLEEVING, FIND NO. 10, WITH WIRE ADDRESS WITHIN 2 INCHES OF ITS TERMINATION, IN ACCORDANCE WITH MIL-M-60903. THE ADDRESS CONSISTS OF THE FROM TERMINATION, A DOUBLE HEADED ARRoW AND THE TO TERMINATION.
3. SOLDER CONNECTIONS SHALL BE IN ACCORDANCE WITH MIL-STD-2000, USING SOLDER, FIND NO. 8.
4. STRIP AND TIN ENDS IN ACCORDANCE WITH MIL-STD-2000.
5. CRIMPED CONNECTIONS SHALL BE IN ACCORDANCE WITH MIL-E-45782.
6. BUNDLE WIRES USING TIE DOWN STRAPS, FIND NO. 9, AT INTERVALS OF 3.00 MAX. AND AT ALL BREAKOUTS.
7. WIRE NO. 2 AND 12 SHALL TERMINATE AT TERMINAL. FIND NO. 3 OR 4. CRIMP WIRES IN TERMINAL. FIND NO. 3 OR 4, AND SOLDER.

WIRE LIST

WIRE NO.	TERMINATION		TERMINATION		WIRE FIND NO.
	FROM	FIND NO.	TO	FIND NO.	
1	J4-A	1	K1-A1	7	2
2	J4-B	1	Lo	3 0 R 4	2
3	J4-C	1	K1-Y	5	2
4	J4-D	1	K1-X	5	2
5	J4-F	1	K1-11	5	2
6	J4-G	1	K1-12	5	2
7	J4-H	1	K2-12	5	2
8	J4-I	1	K2-11	5	2
9	J4-K	1	K2-x	5	2
10	J4-L	1	K2-Y	5	2
11	J4-M	1	K2-A1	7	2
12	J4-N	1	IA	3 0 R 4	

Figure G-2. Control Wiring Harness W7 (Sheet 2).

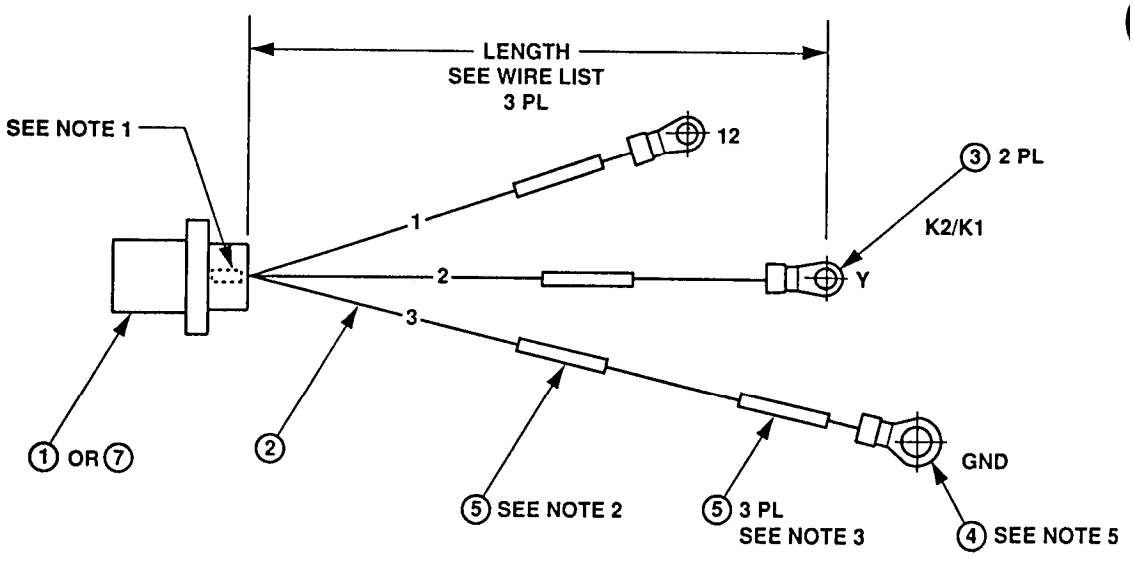

PARTS LIST

FIND NO.	PART NO.	QUANTITY REQUIRED -1	QUANTITY REQUIRED -2	DESCRIPTION	SPECIFICATION
1	MS3102R18-11P	1	-	CONNECTOR, RECEPTACLE, ELECTRICAL	
2	M22759/16-16-9	AR	AR	WIRE, EIJKYI!RICAL, 16 AWG, WHT	MIL-W-22759/16
3	MS25036-107	2	2	TERMINAL LUG, CRIMP STYLE, 16-14 AWG, .138 STUD SIZE	
4	MS25036-154	1	1	TERMINAL LUG, CRIMP STYLE, 16-14 AWG, .250 STUD SIZE	
5	M23053/5-104-4	4	4	INSULATION SLEEVING, HEAT SHRINKABLE, .125 ID X 2.oo LONG	MIL-I-23053/5
6	Sn60Pb40	AR	AR	SOLDER	QQ-S-571
7	MS3102R18-11S	-	1		

Figure G-3. Switch Box Power Wring Harness W17 and W18 (Sheet 1 of 2).

NOTES:

L MARK REFERENCE DESIGNATION "J3" OR "P1" IN ACCORDANCE WITH MIL-STD-130, METHOD OPTIONAL.

2. HOT STAMP "W17 OR W18", INDICATED IN WIRE LIST, AND "97403-13229E5806- " WITH APPROPRIATE DASH NO. ON SLEEVING, m NO. 5, IN ACCORDANCE WITH MIL-M-60903. LOCATE APPROXIMATELY AT MIDPOINT OF WIRE.

3. HOT STAMP SLEEVING, FIND NO. 5, WITH WIRE ADDRESS, WITHIN 2 INCHES OF ITS TERMINATIONS, IN ACCORDANCE WITH MIL-M-60903. THE ADDRESS CONSISTS OF THE FROM TERMINATION, A DOUBLE HEADED ARROW, AND THE TO TERMINATION.

4. SOLDER CONNECTIONS SHALL BE IN ACCORDANCE WITH MIL-STD-2000, USING SOLDER, FIND NO. 6.

5. CRIMPED CONNECTIONS SHALL BE IN ACCORDANCE WITH MIL-E-45782.

WIRE LIST

DASH NO.	WIRE NO.	TERMINATION		TERMINATION		LENGTH +/- .12	HARNESS REF DES
		FROM	FIND NO.	TO	FIND NO,		
-1	1	J3-A	1	K2-12	3	12.00	w 17
	2	J3-B	1	K2-Y	3	12.00	
	3	J3-E	1	GND	4	21.00	
-2	1	P1-A	7	K1-12	3	36.00	W18
	2	P1-B	7	K1-Y	3	36.00	
	3	P1-E	7	GND	4	45.00	

Figure G-3. Switch Box Power Wiring Harness W17 and W18 (Sheet 2).

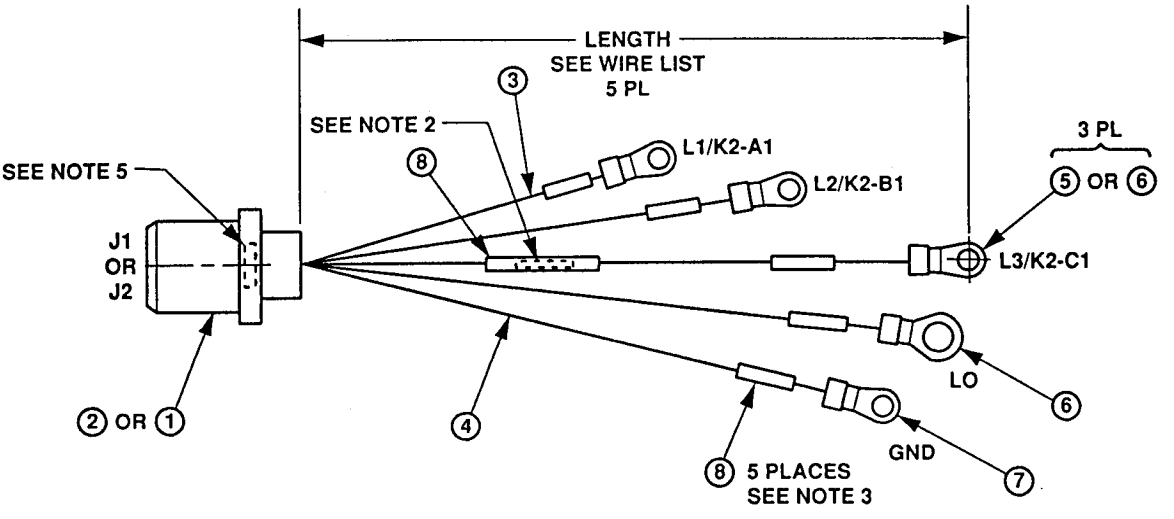

PARTS LIST

FIND NO.	PART NO.	QUANTITY REQUIRED -1	QUANTITY REQUIRED -2	DESCRIPTION	SPECIFICATION
1	MS90555C32413SY	1	-	CONNECTOR, RECEPTACLE, ELECTRICAL	
2	MS90655C32413PY	-	1	CONNECTOR, RECEPTACLE, ELECTRICAL	
3	M5086/2-4-9	AR	AR	WIRE, ELECTRICAL, 4 AWG, WHT	MIL-W-5086/2
4	M5086/2-6-9	AR	AR	WIRE, ELECTRICAL, 6 AWG, WHT	MIL-W-5086/2
5	MS25036-125		3	TERMINAL LUG, 4 AWG, .376 STUD SIZE	
6	MS20659-145	4	1	TERMINAL LUG, 4 AWG, .500 STUD SIZE	
7	MS25036-120	1	1	TERMINAL LUG, 6 AWG, .250 STUD SIZE	
8	M23053/5-108-4	6	6	INSULATION SLEEVING, HEAT SHRINKABLE, .500 ID X 2.50 LONG	MIL-I-23053/5

Figure G-4, Input/Output Connector WIring Harness W9 and W1O (Sheet 1 0f 2).

NOTES:

1. ASSEMBLE WIRE, FIND NO. 3 AND 4, INTO CONNECTOR, FIND NO. 1 OR 2, IN ACCORDANCE WITH MIL-C-22992, CLASS L.

2. HOT STAMP 'W ", INDICATED IN WIRE LIST, AND "97403-13229E5808- " WITH APPROPRIATE DASH NO. ON SLEEVING, FIND NO. 8, IN ACCORDANCE WITH MIL-M-60903. LOCATE AT MIDPOINT OF WIRE.

3. HOT STAMP SLEEVING, FIND NO. 8, WITH WIRE ADDRESS, WITHIN 2 INCHES OF ITS TERMINATIONS, IN ACCORDANCE WITH MIL-M-60903. THE ADDRESS CONSISTS OF FROM TERMINATION, A DOUBLE HEADED ARROW, AND THE TO TERMINATION.

4. CRIMPED CONNECTIONS SHALL BE IN ACCORDANCE WITH MIL-E-45782.

6. MARK CONNECTOR REFERENCE DESIGNATION IN .12 MIN HIGH CHARACTERS IN ACCORDANCE WITH MIL-STD-130, METHOD OPTIONAL.

WIRE LIST

DASH NO.	CONN REF DES	WIRE NO.	TERMINATION FROM	TERMINATION FIND NO.	TERMINATION TO	TERMINATION FIND NO.	LENGTH +/- .12	WIRE FIND NO.	HARNESS REF DES
-1	J1	1	J1-A	1	L1	6	14.00	3	W9
		2	J1-B	1	L2		17.00		
		3	J1-C	1	L3		20.00		
		4	J1-N	1	Lo		8.00		
		5	J1-G	1	GND	7	8.00	4	
-2	J2	1	J2-A	2	K2-A1	5	10.00	3	W 10
		2	J2-B	2	K2-B1				
		3	J2-C	2	K2-C1				
		4	J2-N	2	Lo	6	28.00		
		5	J2-G	2	GND	7	25.00	4	

Figure G-4. Input/Output Connector Wiring Harness W9 and W10 (Sheet 2).

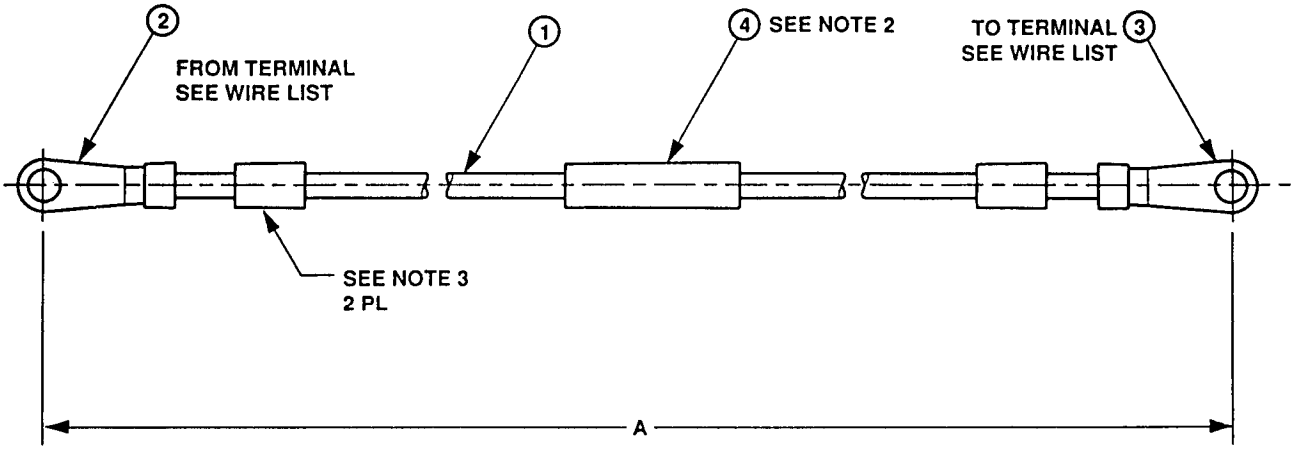

PARTS LIST

FIND NO.	PART NO.	QUANTITY REQUIRED -1 THRU -3	QUANTITY REQUIRED -11 THRU -13	DESCRIPTION	SPECIFICATION
1	M5086/2-4-9	AR	AR	WIRE, ELECTRICAL, 4 AWG, WHT	MIL-W-5086/2
2	MS25036-125	1	1	TERMINAL LUG, 4 AWG, .375 STUD SIZE	
3	MS25036-145	1	1	TERMINAL LUG, 4 AWG, .500 STUD SIZE	
4	M23053/5-108-4	3	3	INSULATION SLEEVING, HEAT SHRINKABLE, .500 ID X L AS REQUIRED	MIL-I-23053/5

NOTES:

1. CRIMPED CONNECTIONS SHALL BE IN ACCORDANCE WITH MIL-STD-454, REQUIREMENT 19.
2. HOT STAMP "W ", INDICATED IN WIRE LIST, AND "97403-13229E5810- " WITH APPROPRIATE DASH NO. ON SLEEVING, FIND NO. 4, IN ACCORDANCE WITH MIL-M-60903. LOCATE AT MIDPOINT OF WIRE.
3. HOT STAMP INSULATION SLEEVING, FIND NO. 4, WITH WIRE ADDRESS, WITHIN 2 INCHES OF ITS TERMINATIONS, IN ACCORDANCE WITH MIL-M-60903. THE ADDRESS CONSISTS OF THE FROM TERMINATION, A DOUBLE HEADED ARROW, AND THE TO TERMINATION.

WIRE LIST

DASH NO.	REF DES	TERMINATION FROM	TERMINATION FROM FIND NO.	TERMINATION TO	TERMINATION TO FIND NO.	DIM. A	WIRE FIND NO.
-1	W11	K1-A2	2	L1	3	12.50	1
-2	W12	K1-B2		L2			
-3	W13	K1-C2		L3			
-11	W14	K2-A2	2	L1	3	15.50	1
-12	W 15	K2-B2		L2			
-13	W16	K2-C2		L3			

Figure G-5. Electrical Leads WI1- W16.

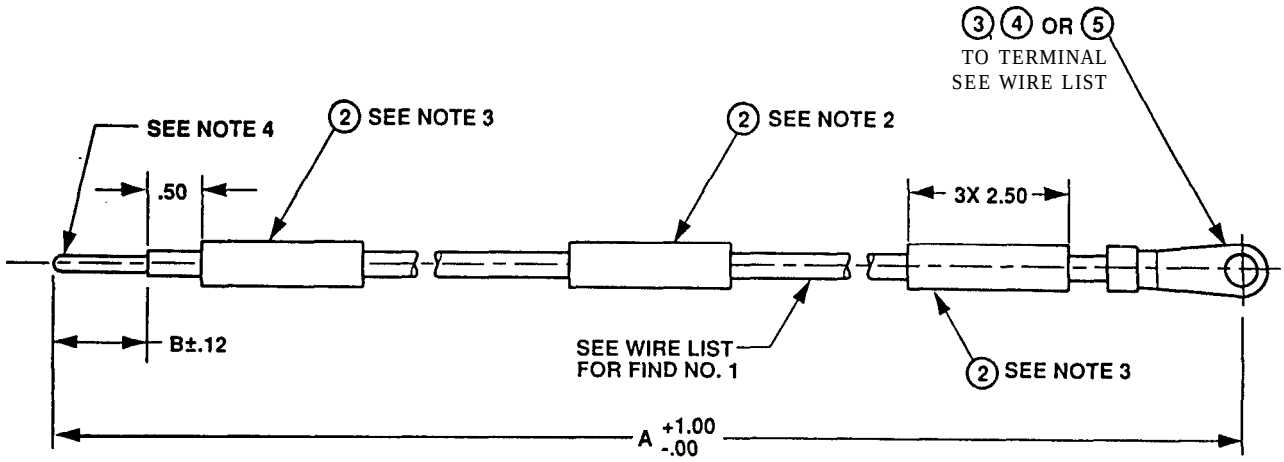

PARTS LIST

NO.	PART NO.	QUANTITY REQUIRED -1 THRU -3	-4	-5	DESCRIPTION	SPECIFICATION
1	M5086/2-4-9	1	1	1	WIRE, ELECTRICAL, 4 AWG, WHT	MIL-W-5086/2
2	M23053/5-108-4	3	3	3	INSULATION SLEEVING, HEAT SHRINKABLE	MIL-I-23053/5
3	MS25036-125	1	-	-	TERMINAL LUG, CRIMP, 4 AWG, .375 STUD SIZE	
4	M525036-145	-	1		TERMINAL LUG, CRIMP, 4 AWG, .500 STUD SIZE	
5	M525036-123	-	-	1	TERMINAL LUG, CRIMP, 4 AWG, .250 STUD SIZE	
6	Sn60Pb40	AR	AR	AR	SOLDER	QQ-S-571

NOTES:

1. CRIMPED CONNECTIONS SHALL BE IN ACCORDANCE WITH MIL-STD-454, REQUIREMENT 19.
2. HOT STAMP 'W ", INDICATED IN WIRE LIST, AND "97403-13229E5811- " WITH APPROPRIATE DASH NO. ON SLEEVING, FIND No. 2, IN Accordance WITH MIL-M-60903. LocATE AT MIDPOINT OF WIRE.
3. HOT STAMP INSULATION SLEEVING, FIND NO. 2, WITH WIRE ADDRESS, WITHIN 2 INCHES OF ITS TERMINATIONS, IN ACCORDANCE WITH MIL-M-60903. THE ADDRESS CONSISTS OF THE FROM TERMINATION, A DOUBLE HEADED ARROW, AND THE TO TERMINATION.
4, STRIP WIRE IN ACCORDANCE WITH WIRE LIST AND TIN EXPOSED CONDUCTOR FOR A DISTANCE OF .12 +/- .03 INCHES FROM CONDUCTOR END IN ACCORDANCE WITH MIL-STD-2000.

Figure G-6, Power ***Leads W1-W5 (Sheet 1 of 2).***

WIRE LIST

DASH NO.	REF DES	TERMINATION		TERMINATION		DIM. A	DIM. B	WIRE FIND NO.
		FROM	FIND NO.	TO	FIND NO.			
-1	W1	G1-L1	-	K1-A1	3	54.00	1.38	1
-2	W2	G1-L2	-	K1-B1	3	59.00	1.38	1
-3	W3	G1-L3	-	KI-C1	3	64.00	1.38	1
-4	W4	G1-L0	-	Lo	4	46.00	1.38	1
-5	W5	G1-GND	-	GND	5	37.00	1.38	1

Figure G-6. Power Leads W1-W5 (Sheet 2).

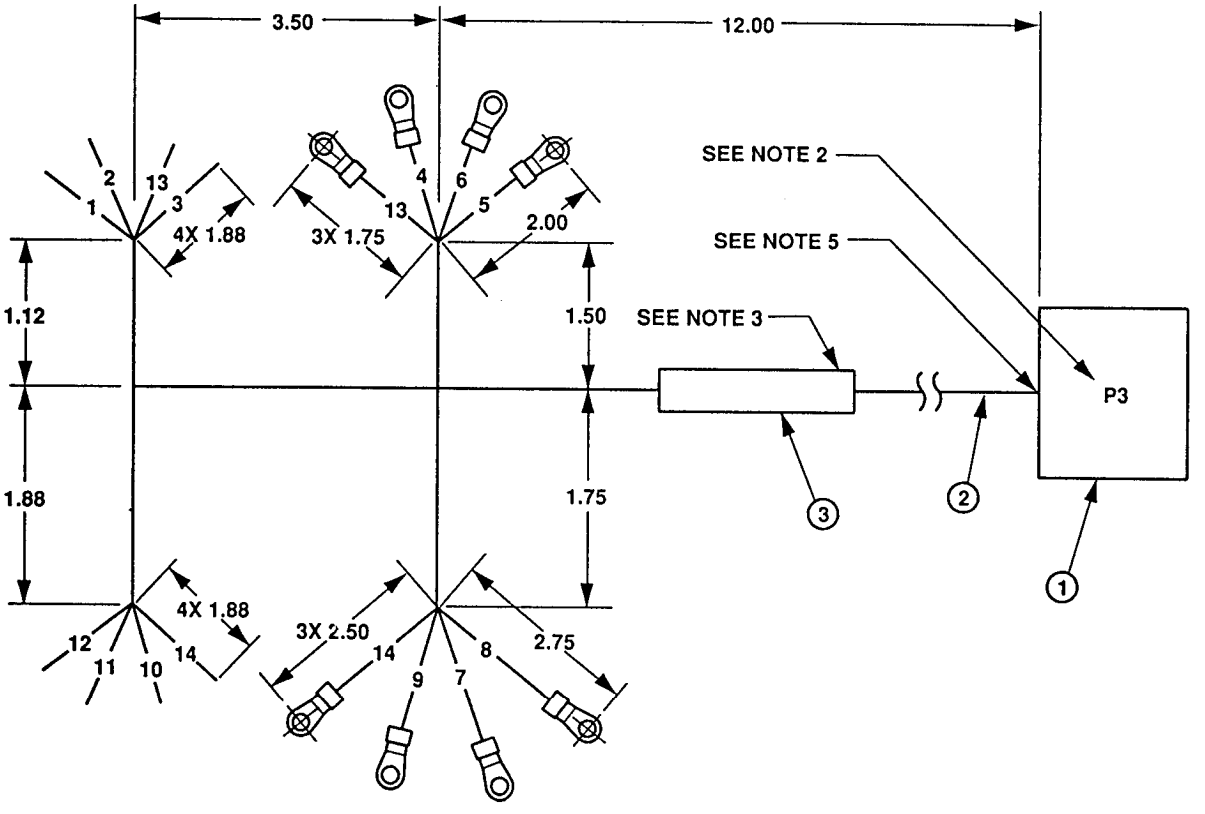

PARTS LIST

FIND NO.	PART NO.	QUANTITY REQUIRED	DESCRIPTION	SPECIFICATION
1	MS3106R2O-27P	1	CONNECTOR, PLUG, ELECTRICAL	
2	M22759/16-20-9	AR	WIRE, ELECTRICAL, 20 AWG, WHT	MIL-W-22759/16
3	M23053/5-107-4	1	INSULATION SLEEVING, HEAT SHRINK, 2.50 L	MIL-I-23053/5
4	MS25036-101	8	TERMINAL LUG, 22-18 AWG, NO. 6 STUD	
5	Sn60Pb40	AR	SOLDER	QQ-S-571
6	MS3367-1-9	AR	STRAP, TIE DOWN, ELECTRICAL	
7	M23053/5-105-4	14	INSULATION SLEEVING, HEAT SHRINK, LAS REQUIRED	.MIL-I-23053/5

Figure G-7. Control Panel Harness Assembly W20 (Sheet 1 of 2).

NOTES:

1. MARK REFERENCE DESIGNATION "'P3" IN ACCORDANCE WITH MIL-STD-130, METHOD OPTIONAL.
2. HOT STAMP "W20" AND "97403-13229E5837" ON SLEEVING, FIND NO. 3, IN ACCORDANCE WITH MIL-M-60903. LOCATE APPROXIMATELY AT MIDPOINT OF WIRE.
3. HOT STAMP SLEEVING, FIND NO. 7, WITH WIRE ADDRESS USING .09-.16 HIGH BLACK CHARACTERS, WITHIN 2 INCHES OF ITS TERMINATIONS, IN ACCORDANCE WITH MIL-M-60903. THE ADDRESS CONSISTS OF THE FROM TERMINATION, A DOUBLE HEADED ARROW, AND THE TO TERMINATION.
4. SOLDER CONNECTIONS SHALL BE IN ACCORDANCE WITH MIL-STD-2000, USING SOLDER FIND NO. 5.
5. CRIMPED CONNECTIONS SHALL BE IN ACCORDANCE WITH MIL-E-45782.
6. USE TIEDOWN S TRAPS, FIND NO. 6, TO BUNDLE WIRES AT INTERVALS OF 3.00 MAX.

WIRE LIST

WIRE NO.	TERMINATION		TERMINATION		WIRE FIND NO.	REMARKS
	FROM	FIND NO.	TO	FIND NO.		
1	XDS1-1		P3-A	1	2	
2	XDS1-2		P3-B	1	2	
3	XDS3-1		P3-C	1	2	
4	S1-3	4	P3-D	1	2	SEE NOTE 6
5	S1-5	4	P3-F	1	2	SEE NOTE 6
6	S1-6	4	P3-G	1	2	SEE NOTE 6
7	S2-6	4	P3-H	1	2	SEE NOTE 6
8	S2-5	4	P3-I	1	2	SEE NOTE 6
9	S2-3	4	P3-K	1	2	SEE NOTE 6
10	XDS4-2	.	P3-L	1	2	
11	XDS2-1		P3-M	1	2	
12	XDS2-2		P3-N	1	2	
13	XDS3-1		S1-3	4	2	SEE NOTE 6
14	XDS4-1	.	S2-3	4	2	SEE NOTE 6

Figure G-7. Control Panel Harness Assembly **W20 (Sheet 2).**

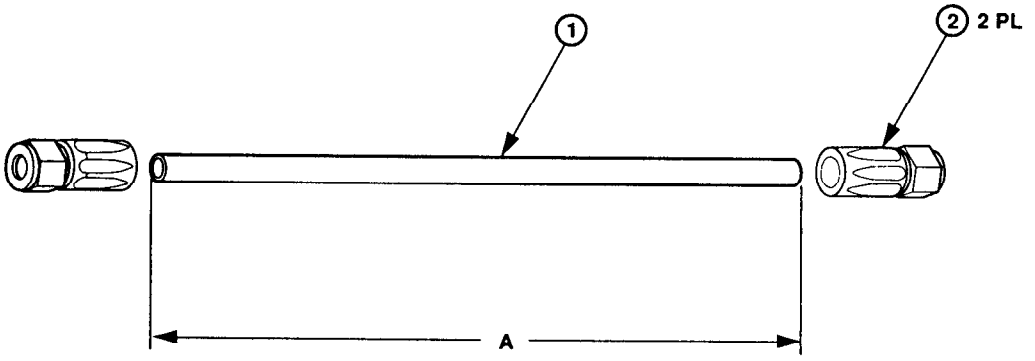

Figure G-8. Fuel Drain Assembly.

PARTS LIST

FIND NO.	PART NO.	QUANTITY REQUIRED	DESCRIPTION	SPECIFICATION
1	MS52103-2	36”	HOSE, NONMETALLIC	
2	MS24587-5	2	FLARED, FITTING	

NOTES:

1. CUT NONMETALLIC HOSE TO LENGTH. USE OLD HOSE AS A TEMPLATE FOR APPROXIMATE LENGTH.
2. INSTALL FITTING FLARED AT EACH END OF NONMETALLIC HOSE AND TRUN COUNTERCLOCLWISE TO INSTALL.

APPENDIX H
TORQUE LIMITS

SAE Grade Number	1or2	5	6or7	8
Quality of Material	Indeterminate	Minimum Commercial	Medium Commercial	Best Commercial
Capscrew Head Markings	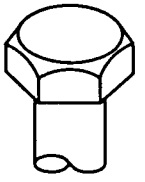	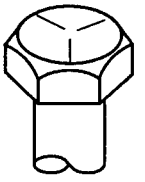		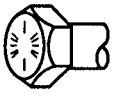

NOTE

Head marking may vary with different manufacturers.

Capscrew Body Size (Inches) - (Thread)		Torque Ft Lb (N.m)		Torque Ft Lb (N.m)		Torque Ft Lb (N.m)		Torque Ft Lb (N.m)	
1/4	20	5	(7)	8	(11)	10	(14)	12	(16)
	28	6	(8)	10	(14)			14	(19)
5/16	18	11	(15)	17	(23)	19	(26)	24	(33)
	24	13	(18)	19	(26)			27	(37)
3/8	16	18	(24)	31	(42)	34	(46)	44	(60)
	24	20	(27)	35	(47)			49	(66)
7/16	14	28	(38)	49	(66)	55	(75)	70	(95)
	20	30	(41)	55	(75)			78	(106)
1/2	13	39	(53)	75	(102)	85	(115)	105	(142)
	20	41	(56)	85	(115)			120	(163)
9/1 6	12	51	(69)	110	(149)	120	(163)	155	(210)
	18	55	(75)	120	(163)			170	(231)
5/8	11	83	(113)	150	(203)	167	(226)	210	(285)
	18	95	(129)	170	(231)			240	(325)
3/4	10	105	(142)	270	(366)	280	(380)	375	(508)
	16	115	(156)	295	(400)			420	(569)
7/8	9	160	(217)	395	(536)	440	(597)	605	(820)
	14	175	(237)	435	(590)			675	(915)
1	8	235	(31 9)	590	(800)	660	(895)	910	(1234)
	14	250	(339)	660	(895)			990	(1342)

CAUTION

If replacement capscrews are of a higher grade than originally supplied, use torque specifications for that placement. This will prevent equipment damage due to over torquing.

NOTE

Always use the torque values listed above when specific torque values are not available.

APPENDIX I
MANDATORY REPLACEMENT PARTS

Section I. INTRODUCTION

D-1 SCOPE.

This appendix lists all parts used on the high mobility trailer that must be discarded when removed during maintenance and installed new.

D-2 GENERAL.

All mandatory replacement parts are listed by Item Number, Nomenclature, and Part Number.

SECTION II. MANDATORY REPLACEMENT PARTS LIST.

(1) Item Number	(2) Nomenclature	(3) Part Number
1	Washer, Lock (5/16)	MS35338-140
2	Washer, Lock (3/8)	MS35338-141
3	Rivet	AD45ABS
4	Washer, Lock (1/4)	MS35338-158
5	Washer, Lock (1/2)	MS35338-143
6	Rivet, Steel Shank (1/4 .350-.625)	MLGP-R8-10
7	Rivet, Steel Shank (1/4 .080-.375)	MGLP-R8-6
8	Rivet, Blind (1/4 .470-.531)	BOM-R8-8
9	Rivet, Blind (1/4 .595-.656)	BOM-R8-10
10	Rivet, Blind (3/16 .305-.500)	MGL100-R6-9
11	Rivet, Blind (3/8 .438-.562)	BOM-R12-8
12	Strap, Tiedown, Electrical Component	MS-3367-1-0
13	Washer, Lock (3/8)	MS35338-141

GLOSSARY

Section I. ABBREVIATIONS

COMMON ABBREVIATIONS.

The common abbreviations used in this manual are in accordance with MIL-STD-12D.

SPECIAL OR UNIQUE ABBREVIATIONS.

The following are abbreviations and symbols that are used in this manual and not listed in MIL-STD-12D.

AAL . . . . . additional authorization list
BII . . . . . basic issue item
BOI . . . . . basis of issue
°c . . . . . degrees Celsius
CAGE . . . . . commercial and government entity
CAGEC . . . . . commercial and government entity code
conex. . . . . container express
COEI . . . . . components ofend item
CPC . . . . . corrosion prevention and control
CTA . . . . . common table of allowance
Cucv . . . . . commercial utility cargo vehicle
DMWR . . . . . Depot Maintenance Work Requirement
DOD . . . . . Department ofDefense
EIR . . . . . equipment improvement recommendation
°F . . . . . degrees Fahrenheit
HMMwv . . . . . high mobility multipurpose wheeled vehicle
HMT . . . . . high mobility trailer
Hz . . . . . hertz
JTA . . . . . joint table of allowances
kg . . . . . kilogram
kPA . . . . . kilopascals
kph . . . . . kilometersperhour
kW . . . . . kilowatt
lbf.ft . . . . . foot pound force
m . . . . . meter(metric measure)
MAC . . . . . maintenance allocation chart
MTOE . . . . . modification table oforganization and equipment
NIIN. . . . . national item identification number
N•m . . . . . newton meter
NSNS . . . . . national stock numbers
PMCS . . . . . preventive maintenance checks and services
RPSTL . . . . . repair parts and special tools list
SMR . . . . . source, maintenance, and recoverability
TAMMS . . . . . The Army Maintenance Management System
TDA . . . . . table of distribution and allowances
TMDE . . . . . test, measurement, and diagnostic equipment
UOC . . . . . usable encode

Section II. DEFINITION OF UNUSUAL TERMS

UNUSUAL TERMS.

The following are terms that are used in this manual and not listed in the Army dictionary (AR 310-25).

None.

INDEX

Subject	*Paragraph, Figure, Table, Number*

F

G

H

I

L

M

Subject — *Paragraph, Figure, Table, Number*

O - Continued

P

R

s

Subject — *Paragraph, Figure, Table, Number*

S -Continued

T

u

w

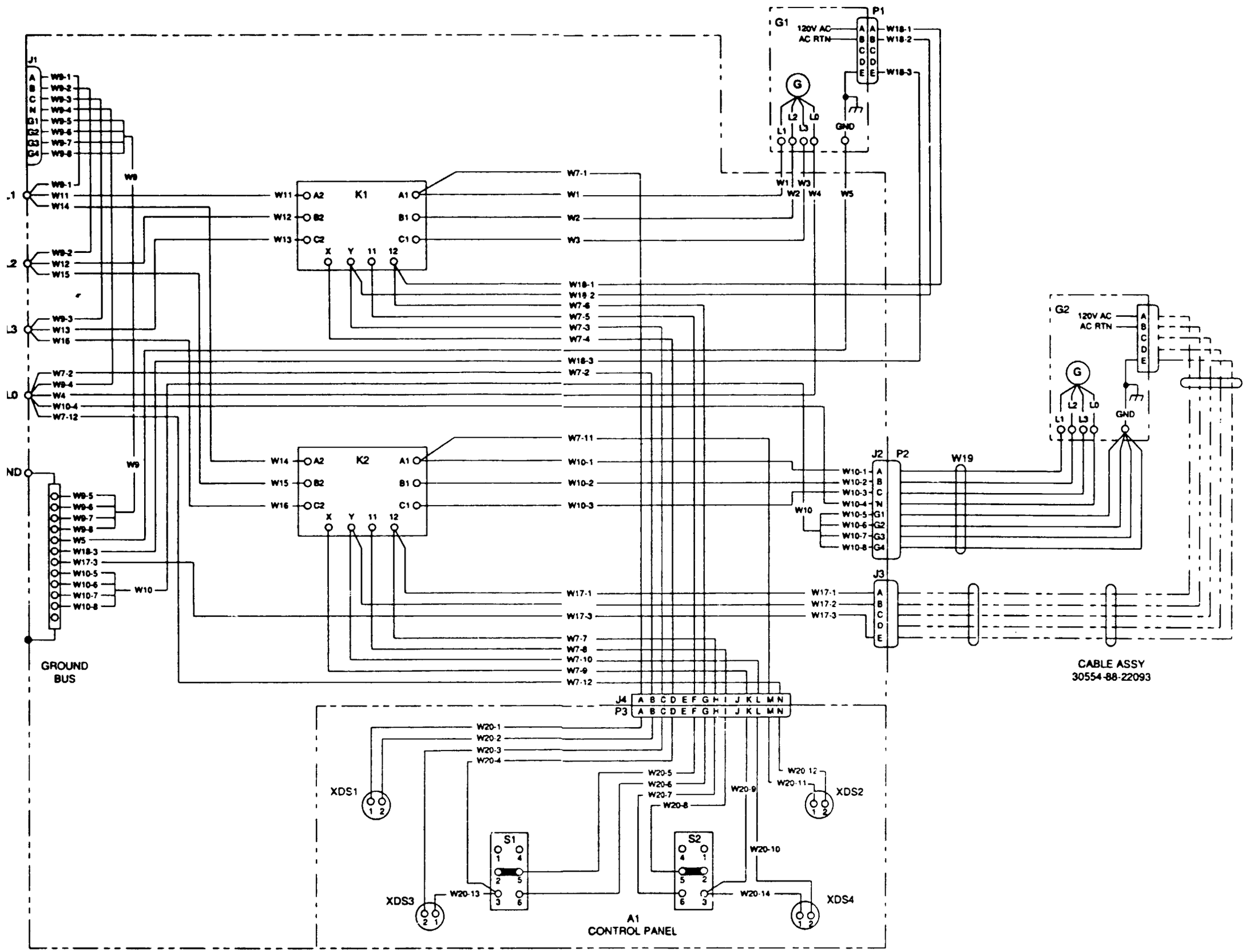

FO-1. Power Plant Wiring Diagram.

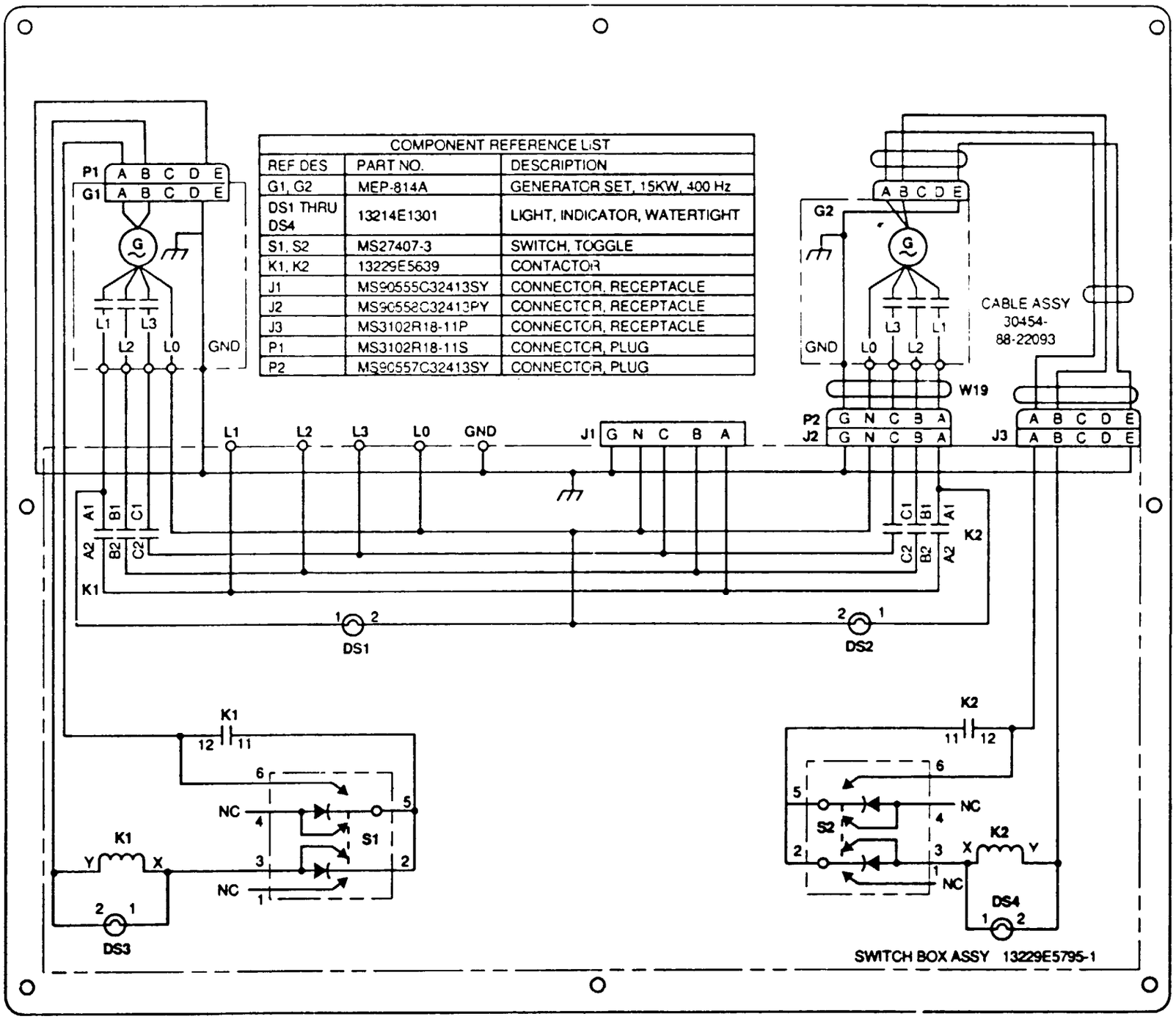

COMPONENT REFERENCE LIST		
REF DES	PART NO.	DESCRIPTION
G1, G2	MEP-814A	GENERATOR SET, 15KW, 400 Hz
DS1 THRU DS4	13214E1301	LIGHT, INDICATOR, WATERTIGHT
S1, S2	MS27407-3	SWITCH, TOGGLE
K1, K2	13229E5639	CONTACTOR
J1	MS90555C32413SY	CONNECTOR, RECEPTACLE
J2	MS90558C32413PY	CONNECTOR, RECEPTACLE
J3	MS3102R18-11P	CONNECTOR, RECEPTACLE
P1	MS3102R18-11S	CONNECTOR, PLUG
P2	MS90557C32413SY	CONNECTOR, PLUG

FO-2. Power Plant Schematic.

By Order of the Secretary of the Army:

GORDON R. SULLIVAN
General, United States Army
Chief of Staff

Official:

MILTON H. HAMILTON
Administrative Assistant to the
Secretary of the Army
05444

DISTRIBUTION :
To be distributed in accordance with DA Form 12-25-E, block no. 6177, requirements for TM 9-6115-661-13&P.

RECOMMENDED CHANGES TO EQUIPMENT TECHNICAL PUBLICATIONS

THEN. . JOT DOWN THE DOPE ABOUT IT ON THIS FORM, CAREFULLY TEAR IT OUT, FOLD IT AND DROP IT IN THE MAIL!

SOMETHING WRONG WITH THIS PUBLICATION?

FROM (PRINT YOUR UNIT'S COMPLETE ADDRESS)
CDR, 1st Br, 65th ADA
ATTN: SP4 J. Brown
Key West, FL 33040

DATE SENT
10 Jun 79

PUBLICATION NUMBER	PUBLICATION DATE	PUBLICATION TITLE
TM 9-1430-550-34-1	7 Sep 72 .	Unit of Radar Set AN/MPQ-50 Tested at the HFC

BE EXACT PIN-POINT WHERE IT IS

PAGE NO	PARA-GRAPH	FIGURE NO	TABLE NO
9-19		9-5	
21-2	step 1C	21-2	

IN THIS SPACE TELL WHAT IS WRONG AND WHAT SHOULD BE DONE ABOUT IT:

"B" Ready Relay K11 is shown with two #9 contacts. That contact which is wired to pin 8 of relay K16 should be changed to contact #10.

Reads: Multimeter B indicates 600 K ohms to 9000 K ohms.

Change to read: Multimeter B indicates 600 K ohms minimum.

Reason: Circuit being checked could measure infinity. Multimeter can read above 9000 K ohms and still be correct.

SAMPLE

PRINTED NAME GRADE OR TITLE AND TELEPHONE NUMBER
SP4 J.T. Brown, Jr.

SIGN HERE
SP4 James Brown, Jr.

DA FORM 2 JUL 79 2028-2 REPLACES DA FORM 2028-2 1 APR 78 WHICH WILL BE USED UNTIL EXHAUSTED
AMSAV M Overprint 3, 1 Mar 91

P.S.--IF YOUR OUTFIT WANTS TO KNOW ABOUT YOUR RECOMMENDATION MAKE A CARBON COPY OF THIS AND GIVE IT TO YOUR HEADQUARTERS

TEAR ALONG PERFORATED LINE

REVERSE OF DA FORM 2028-2 Reverse of DRSTS-M Overprint 2, 1 Nov 80

TEAR ALONG PERFORATED LINE

FILL IN YOUR UNITS ADDRESS

FOLD BACK

DEPARTMENT OF THE ARMY

OFFICIAL BUSINESS

COMMANDER
U.S. ARMY AVIATION AND TROOP COMMAND
ATTN: AMSAT-I-MP
4300 GOODFELLOW BOULEVARD
ST. LOUIS, MO 63120-1798

RECOMMENDED CHANGES TO EQUIPMENT TECHNICAL PUBLICATIONS

THEN JOT DOWN THE DOPE ABOUT IT ON THIS FORM, CAREFULLY TEAR IT OUT, FOLD IT AND DROP IT IN THE MAIL!

SOMETHING WRONG WITH THIS PUBLICATION?

FROM (PRINT YOUR UNIT'S COMPLETE ADDRESS)

DATE SENT

PUBLICATION NUMBER	PUBLICATION DATE	PUBLICATION TITLE
TM 9-6115-661-13&P	15 OCT 93	POWER UNIT, DIESEL ENGINE DRIVEN AND POWER PLANT, DIESEL ENGINE DRIVEN

BE EXACT PIN-POINT WHERE IT IS

PAGE NO	PARA-GRAPH	FIGURE NO	TABLE NO

IN THIS SPACE TELL WHAT IS WRONG AND WHAT SHOULD BE DONE ABOUT IT:

PRINTED NAME GRADE OR TITLE AND TELEPHONE NUMBER

SIGN HERE

DA FORM 1 JUL 79 2028-2

PREVIOUS EDITIONS ARE OBSOLETE

P.S.--IF YOUR OUTFIT WANTS TO KNOW ABOUT YOUR RECOMMENDATION MAKE A CARBON COPY OF THIS AND GIVE IT TO YOUR HEADQUARTERS

TEAR ALONG PERFORATED LINE

REVERSE OF DA FORM 2028-2 Reverse of DRSTS-M Overprint 2, 1 Nov 80

TEAR ALONG PERFORATED LINE

FILL IN YOUR UNITS ADDRESS

FOLD BACK

DEPARTMENT OF THE ARMY

OFFICIAL BUSINESS

COMMANDER
U.S. ARMY AVIATION AND TROOP COMMAND
ATTN: AMSAT-I-MP
4300 GOODFELLOW BOULEVARD
ST. LOUIS, MO 63120-1798

RECOMMENDED CHANGES TO EQUIPMENT TECHNICAL PUBLICATIONS

SOMETHING WRONG WITH THIS PUBLICATION?

FROM (PRINT YOUR UNIT'S COMPLETE ADDRESS)

DATE SENT

PUBLICATION NUMBER	PUBLICATION DATE	PUBLICATION TITLE
TM 9-6115-661-13&P	15 OCT 93	POWER UNIT, DIESEL ENGINE DRIVEN AND POWER PLANT, DIESEL ENGINE DRIVEN

BE EXACT PIN-POINT WHERE IT IS

PAGE NO	PARA-GRAPH	FIGURE NO	TABLE NO

IN THIS SPACE TELL WHAT IS WRONG AND WHAT SHOULD BE DONE ABOUT IT:

PRINTED NAME GRADE OR TITLE AND TELEPHONE NUMBER

SIGN HERE

DA FORM 1 JUL 79 2028-2

PREVIOUS EDITIONS ARE OBSOLETE

P.S.--IF YOUR OUTFIT WANTS TO KNOW ABOUT YOUR RECOMMENDATION MAKE A CARBON COPY OF THIS AND GIVE IT TO YOUR HEADQUARTERS

TEAR ALONG PERFORATED LINE

REVERSE OF DA FORM 2028-2 Reverse of DRSTS-M Overprint 2, 1 Nov 80

TEAR ALONG PERFORATED LINE

FILL IN YOUR UNITS ADDRESS

FOLD BACK

DEPARTMENT OF THE ARMY

OFFICIAL BUSINESS

COMMANDER
U.S. ARMY AVIATION AND TROOP COMMAND
ATTN: AMSAT-I-MP
4300 GOODFELLOW BOULEVARD
ST. LOUIS, MO 63120-1798

RECOMMENDED CHANGES TO EQUIPMENT TECHNICAL PUBLICATIONS

THEN JOT DOWN THE DOPE ABOUT IT ON THIS FORM. CAREFULLY TEAR IT OUT, FOLD IT AND DROP IT IN THE MAIL!

SOMETHING WRONG WITH THIS PUBLICATION?

FROM (PRINT YOUR UNIT'S COMPLETE ADDRESS)

DATE SENT

PUBLICATION NUMBER	PUBLICATION DATE	PUBLICATION TITLE
TM 9-6115-661-13&P	15 OCT 93	POWER UNIT, DIESEL ENGINE DRIVEN AND POWER PLANT, DIESEL ENGINE DRIVEN

BE EXACT PIN-POINT WHERE IT IS

PAGE NO	PARA-GRAPH	FIGURE NO	TABLE NO

IN THIS SPACE TELL WHAT IS WRONG AND WHAT SHOULD BE DONE ABOUT IT:

PRINTED NAME GRADE OR TITLE AND TELEPHONE NUMBER

SIGN HERE

DA FORM 1 JUL 79 2028-2

PREVIOUS EDITIONS ARE OBSOLETE

P.S.--IF YOUR OUTFIT WANTS TO KNOW ABOUT YOUR RECOMMENDATION MAKE A CARBON COPY OF THIS AND GIVE IT TO YOUR HEADQUARTERS

REVERSE OF DA FORM 2028-2 Reverse of DRSTS-M Overprint 2, 1 Nov 80

TEAR ALONG PERFORATED LINE

FILL IN YOUR UNITS ADDRESS

FOLD BACK

DEPARTMENT OF THE ARMY

OFFICIAL BUSINESS

COMMANDER
U.S. ARMY AVIATION AND TROOP COMMAND
ATTN: AMSAT-I-MP
4300 GOODFELLOW BOULEVARD
ST. LOUIS, MO 63120-1798

The Metric System and Equivalents

Linear Measure

1 centimeter = 10 millimeters = .39 inch
1 decimeter = 10 centimeters = 3.94 inches
1 meter = 10 decimeters = 39.37 inches
1 dekameter = 10 meters = 32.8 feet
1 hectometer = 10 dekameters = 328.08 feet
1 kilometer = 10 hectometers = 3,280.8 feet

Weights

1 centigram - 10 milligrams = .15 grain
1 decigram = 10 centigrams = 1.54 grains
1 gram = 10 decigrams = .035 ounce
1 dekagram = 10 grams = .35 ounce
1 hectogram = 10 dekagrams = 3.52 ounces

1 kilogram = 10 hectograms = 2.2 pounds
1 quintal = 100 kilograms = 220.46 pounds
1 metric ton = 10 quintals = 1.1 short tons

Liquid Measure

1 centiliter = 10 milliliters = .34 fl. ounce
1 deciliter = 10 centiliters = 3.38 fl. ounces
1 liter = 10 deciliters = 33.81 fl. ounces
1 dekaliter = 10 liters = 2.64 gallons
1 hectoliter = 10 dekaliters = 26.42 gallons
1 kiloliter = 10 hectoliters = 264.28 gallons

Square Measure

1 sq. centimeter = 100 sq. millimeters = .155 sq. inch
1 sq. decimeter = 100 sq. centimeters = 15.5 sq. inches
1 sq. meter (centare) = 100 sq. decimeters = 10.76 sq. feet
1 sq. dekameter (are) = 100 sq. meters = 1,076.4 sq. feet
1 sq. hectometer (hectare) = 100 sq. dekameters = 2.47 acres
1 sq. kilometer = 100 sq. hectometers = .386 sq. mile

Cubic Measure

1 cu. centimeter = 1000 cu. millimeters = .06 cu. inch
1 cu. decimeter = 1000 cu. centimeters = 61.02 cu. inches
1 cu. meter = 1000 cu. decimeters = 35.31 cu. feet

Approximate Conversion Factors

To change	To	Multiply by	To change	To	Multiply by
inches	centimeters	2.540	ounce-inches	newton-meters	.007062
feet	meters	.305	centimeters	inches	.394
yards	meters	.914	meters	feet	3.280
miles	kilometers	1.609	meters	yards	1.094
square inches	square centimeters	6.451	kilometers	miles	.621
square feet	square meters	.093	square centimeters	square inches	.155
square yards	square meters	.836	square meters	square feet	10.764
square miles	square kilometers	2.590	square meters	square yards	1.196
acres	square hectometers	.405	square kilometers	square miles	.386
cubic feet	cubic meters	.028	square hectometers	acres	2.471
cubic yards	cubic meters	.765	cubic meters	cubic feet	35.315
fluid ounces	milliliters	29.573	cubic meters	cubic yards	1.308
pints	liters	.473	milliliters	fluid ounces	.034
quarts	liters	.946	liters	pints	2.113
gallons	liters	3.785	liters	quarts	1.057
ounces	grams	28.349	liters	gallons	.264
pounds	kilograms	.454	grams	ounces	.035
short tons	metric tons	.907	kilograms	pounds	2.205
pound-feet	newton-meters	1.356	metric tons	short tons	1.102
pound-inches	newton-meters	.11296			

Temperature (Exact)

°F	Fahrenheit temperature	5/9 (after subtracting 32)	Celsius temperature	°C

PIN: 071918-000