TECHNICAL MANUAL

OPERATOR, UNIT, AND DIRECT SUPPORT MAINTENANCE MANUAL (INCLUDING REPAIR PARTS AND SPECIAL TOOLS LIST)

POWER UNIT, DIESEL ENGINE DRIVEN, 1 TON TRAILER MOUNTED, 5 kW, 60 Hz, PU-797 (NSN 61 15-01-332-0741)

POWER PLANT, DIESEL ENGINE DRIVEN, 1 TON TRAILER MOUNTED, 5 kW, 60 Hz, AN/MJQ-35 (NSN 6115-01-313-4216)

POWER PLANT, DIESEL ENGINE DRIVEN, 1 1/2 TON TRAILER MOUNTED, 5 kW, 60 Hz, AN/MJQ-36 (NSN 6115-01-313-4215)

HEADQUARTERS, DEPARTMENT OF THE ARMY

15 OCTOBER 1993

CHANGE

NO 3

HEADQUARTERS
DEPARTMENT OFTHE ARMY
WASHINGTON, D C., 15 October 1996

OPERATOR, UNIT, AND DIRECT SUPPORT
MAINTENANCE MANUAL (INCLUDING REPAIR PARTS AND SPECIAL TOOLS LIST)

POWER UNIT, DIESEL ENGINE DRIVEN, 1 TON TRAILER MOUNTED,
5kW, 60 Hz, PU-797 (NSN 6115-01-332-0741)
POWER UNIT, DIESEL ENGINE DRIVEN, HIGH MOBIUTY TRAILER MOUNTED,
5kW, 60 Hz, PU-797A (NSN 6115-01-413-3820)
POWER PLANT, DIESEL ENGINE DRIVEN, 1 TON TRAILER MOUNTED,
5kW, 60 Hz, AN/MJ-35 (NSN 6115-01-313-4216)
POWER PLANT, DIESEL ENGINE DRIVEN, HIGH MOBIUTY TRAILER MOUNTED,
5kW, 60 Hz, AN/MJQ35A (NSN 6115-01-414-9697)
POWER PLANT, DIESEL ENGINE DRIVEN,1 1/2 TON TRAILER MOUNTED,
5kW, 60 Hz, AN/MJO-36 (NSN 6115-01-313-4215)

DISTRIBUTION STATEMENT A Approved for public release, distribution is unlimited

TM 9-6115-659-13&P, 15 October 1993, is changed as follows:

1. Remove and insert pages as Indicated below New or changed text material is indicated by a vertical bar in the margin. An Illustration change Is indicated by a miniature pointing hand.

Remove pages	Insert pages
i and ii	i and ii
3-3 through 3-6	3-3 through 3-6
3-9/(3-10 blank)	3-9/(3-10 blank)
4-13 and 4-14	4-13 and 4-14
5-3 and 5-4	5-3 and 5-4
5-19 and 5-20	5-19 and 5-20
5-23 and 5-24	5-23 and 5-24
F-4-1 and F-4-2	F-4-1 and F-4-2
Figure F-6 (Sheet 1 of 2) through F-6-2	Figure F-6 Sheet 1 of 2) through F-6-2
F-8-1 through Figure F-10	F-8-1 through Figure F-10
F-14-1	F-14-1
Figure F- 15 through Figure F-16	Figure F- 1 5 through Figure F- 16
F-17-1 and Figure F-18	F-17-1 and Figure F-18
F-31-1 and Bulk-1	F-31-1 and Bulk-1
1-3 through 1-6	1-3 through 1-6
1-9 through 1-18	1-9 through 1-18
G-3 through G-8	G-3. through G-8
FO-1 and FO-2	FO-1 and FO-2

2. Retain this sheet in front of manual for reference purposes.

By Order of the Secretary of the Army:

DENNIS J. REIMER
General, United States Army
Chief of Staff

Official:

JOEL B. HUDSON
Administrative Assistant to the
Secretary of the Army
02426

DISTRIBUTION:

To be distributed in accordance with DA Form 12-25-E, block no 6175, requirements for TM 9-6115-659-13&P.

CHANGE

NO 2

HEADQUARTERS
DEPARTMENT OF THE ARMY
WASHINGTON, D C ,15 AUGUST 1995

Operator, Unit, and Direct Support Maintenance Manual
(Including Repair Parts and Special Tools List)

Power Unit, Diesel Engine Driven, 1 Ton Trailer Mounted,
5 kW, 60 Hz, PU-797 (NSN 6115-01-332-0741)

Power Unit, Diesel Engine Driven, High Mobility Trailer Mounted,
5 kW, 60 Hz, PU-797A (NSN 6115-01-413-3820)

Power Plant, Diesel Engine Driven, 1 Ton Trailer Mounted,
5 kW, 60 Hz, AN/MJO-35 (NSN 6115-01-313-4216)

Power Plant, Diesel Engine Driven, High Mobility Trailer Mounted,
5 kW, 60 Hz, AN/MJQ-35A (NSN 6115-01-414-9697)

Power Plant, Diesel Engine Driven, 1 1/2 Ton Trailer Mounted,
5 kW, 60 Hz, AN/MJQ-36 (NSN 6115-01-313-4215)

DISTRIBUTION STATEMENT A Approved for public release, distribution is unlimited

TM 9-6115-659-13&P, 15 October 1993, is changed as follows:

1 Title is changed as shown above.

2 Remove and insert pages as indicated below New or changed text material is indicated by a vertical bar in the margin. An Illustration change is indicated by a miniature pointing hand.

Remove pages	Insert pages
i through vi	I through vi
---	vi 1/(vi 2 Blank)
vii through x	vii through x
xiii and xiv	xiii and xiv
1-1 and 1-2	1-1 and 1-2
---	1-41 and 1-4 2
1-5 through 1-11/(1-12 Blank)	1-5 through 1-11/(1-12 Blank)
2-1 and 2-2	2-1 and 2-2
2-5 and 2-6	2-5 and 2-6
---	1-8.1 and 1-8 2
2-9 through 2-30	2-9 through 2-30
2-39 and 2-40	2-39 and 2-40
---	2-40.1 and 2-40.2
2-41 and 2-42	2-41 and 2-42
2-45 and 2-46	2-45 and 2-46
3-1 through 3-4	3-1 through 3-4

Remove Pages

4-1 through 4-8

4-9 through 4-12
4-13 and 4-14
4-19 and 4-20
4-25 through 4-28
4-39 through 4-44
---
445 and 4-46
4-57 through 4-60
5-1 through 5-4
5-7 through 5-14
5-39 and 540
---
541 and 542
5-51/(5-52 Blank)
A-1 through A-3/(A-4 Blank)
B-3 through B-7/(B-8 Blank)
C-1 and C-2
D-1/(D-2 Blank)
E-1 and E-2
F-1 and F-2
F-5 and F-6
Figure F-1
F-1-1 and Figure F-2
F-2-1 and Figure F-3
F-3-1 and Figure F-4
F-4-1 and F-4-2
Figure F-5
F-5-1
F-6-1 and F-6-2
F-7-1 and Figure F-8
F-8-1 and Figure F-9
F-9-1 and Figure F-10
F-10-1 and Figure F-11
F-11-1 and Figure F-12
F-12-1 and Figure F-13
F-13-1 and F-13-2
F-14-1
F-15-1 and Figure F-16
F-16-1 and Figure F-17
F-17-1 and Figure F-18
F-18-1 and Figure F-19

Remove Pages

4-1 through 4-8
4-8 1 and 4-8.2
4-9 through 4-12
4-12.1/(4-12.2 Blank)
4-13 and 4-14
4-19 and 4-20
4-25 through 4-28
4-39 through 4-44
4-44.1/(444 2 Blank)
4-45 and 446
4-57 through 4-60
5-1 through 5-4
5-7 through 5-14
5-39 and 5-40
5-40 1 and 5-40 2
5-41 and 5-42
5-51 through 5-54
A-1 through A-3/(A-4 Blank)
B-3 through B-7/(B-8 Blank)
C-1 and C-2
D-1/(D-2 Blank)
E-1 and E-2
F-1 and F-2
F-5 and F-
Figure F-1
F-1-1 and Figure F-2
F-2-1 and Figure F-3
F-3-1 and Figure F-4
F-4-1 and F-4-2
Figure F-5
F-5-1
F-6-1 and F-6-2
F-7-1 and Figure F-8
F-8-1 and Figure F-9
F-9-1 and Figure F-10
F-10-1 and Figure F-11
F-11-1 and Figure F-12
F-12-1 and Figure F-13
F-13-1 and F-13-2
F-14-1
F-15-1 and Figure F-16
F-16-1 and Figure F-17
F-17-1 and Figure F-18
F-18-1 and Figure F-19

Remove pages	Insert pages
F-19-1 and Figure F-20	F-19-1 and Figure F-20
F-20-1 and Figure F-21	F-20-1
----	Figure F-21, Sheets 1 and 2
F-21-1 and Figure F-22	F-21-1 and F-21-2
----	Figure F-22, Sheets 1 and 2
F-22-1 and Figure F-23	F-22-1 and Figure 23
F-23-1 and Figure F-24	F-23-1
----	Figure F-24, Sheets 1 and 2
F-24-1 and Figure F-25	F-24-1 and F-24-2
----	Figure F-25
F-28-1 and Figure F-29	F-28-1
----	Figure F-29, Sheets 1 and 2
F-29-1 and Figure F-30	F-29-1 and F-29-2
	Figure F-30
F-30-1 and Bulk-1	F-30-1 and Figure F-31
----	F-31-1 and Bulk-1
I-1 and 1-18	I-1 and 1-21(1-22.2 Blank)
G-1 and G-2	G-1 and G-2
G-13 and G-14	G-13 and G-14
----	Appendix I
Glossary 1 and Glossary 2	Glossary 1 and Glossary 2
Index 1 through Index 5(/Index 6 Blank)	Index 1 through Index 5(/Index 6 Blank)

3. Retain this sheet in front of manual for reference purposes.

By Order of the Secretary of the Army:

DENNIS J REIMER
General, United States Army
Chief of Staff

Official:

JOEL B HUDSON
Acting Administrative Assistant to the
Secretary of the Army

DISTRIBUTION:

To be distributed in accordance with DA Form 12-25-E, block no. 6175, requirements for TM 9-6115-661-13&P..

CHANGE

NO. 1

HEADQUARTERS
DEPARTMENT OF THE ARMY
WASHINGTON, D.C., 15 November 1993

OPERATOR, UNIT, AND DIRECT SUPPORT
MAINTENANCE MANUAL (INCLUDING REPAIR PARTS AND
SPECIAL TOOLS LIST)

POWER UNIT, DIESEL ENGINE DRIVEN,
1 TON TRAILER MOUNTED,
5 kW, 60 Hz, PU-797
(NSN 6115-01-332-0741)

POWER PLANT, DIESEL ENGINE DRIVEN,
1 TON TRAILER MOUNTED,
5 kW, 60 Hz, AN/MJQ-35
(NSN 6115-01-313-4216)

POWER PLANT, DIESEL ENGINE DRIVEN,
1 1/2 TON TRAILER MOUNTED,
5 kw, 60 Hz, AN/MJQ-36
(NSN 6115-01-313-4215)

DISTRIBUTION STATEMENT A: Approved for public release; distribution is unlimited.

TM 9-6115-659-13&P, 15 October 1993, is changed as follows:

1. Remove and insert pages as indicated below. New or changed text material is indicated by a vertical bar in the margin. An illustration change is indicated by a miniature pointing hand.

Remove pages	Insert pages
----------	Appendix-F

2. Retain this sheet in front of manual for reference purposes.

By Order of the Secretary of the Army:

GORDONR.SULLIVAN
Genera/,UnitedStates Army
Chief of Staff

Official:

MILTON H. HAMILTON
Administrative Assistant to the
Secretary of the Army

05778

DISTRIBUTION:
To be distributed in accordance with DA Form 12-25-E, block no. 6175, requirements for TM 9-6115-659-13&P.

TECHNICAL MANUAL

NO. 9-6115-659-13&P

HEADQUARTERS
DEPARTMENT OF THE ARMY
WASHINGTON, D.C.,15 OCTOBER 1993

OPERATOR, UNIT, AND DIRECT SUPPORT MAINTENANCE MANUAL (INCLUDING REPAIR PARTS AND SPECIAL TOOLS LIST)

POWER UNIT, DIESEL ENGINE DRIVEN, 1 TON TRAILER MOUNTED, 5 kW, 60 Hz, PU-797 (NSN 6115-01-332-0741)

POWER UNIT, DIESEL ENGINE DRIVEN, HIGH MOBILITY TRAILER MOUNTED, 5 kW, 60 Hz, PU-797A (NSN 6115-01-413-3820)

POWER PLANT, DIESEL ENGINE DRIVEN, 1 TON TRAILER MOUNTED, 5 kW, 60 Hz, AN/MJQ-35 (NSN 6115-01-313-4216)

POWER PLANT, DIESEL ENGINE DRIVEN, HIGH MOBILITY TRAILER MOUNTED, 5 kW, 60 Hz, AN/MJQ-35A (NSN 6115-01-414-9697)

POWER PLANT, DIESEL ENGINE DRIVEN, 1 1/2 TON TRAILER MOUNTED, 5 kW, 60 Hz,AN/MJQ-36 (NSN 6115-01-313-4215)

REPORTING ERRORS AND RECOMMENDING IMPROVEMENTS

You can help Improve this manual If you find any mistakes, or If you know of a way to Improve these procedures, please let us know Mall your letter or DA Form 2028 (Recommended Changes to Publications and Blank Forms), or DA Form 2028-2 located in the back of this manual directly to: Commander, US Army Aviation and Troop Command, ATTN: AMSAT-I-MP, 4300 Goodfellow Blvd., St. Louis, MO 63120-1798 You may also submit your recommended changes by E-mail directly to <mpmt°/oavma28@st-louls-emh7 army mil> A reply will be furnished directly to you Instructions for sending an electronic 2028 may be found at the back of this manual immediately preceding the hard copy 2028.

DISTRIBUTION STATEMENT A Approved for public release, distribution is unlimited

TABLE OF CONTENTS

TABLE OF CONTENTS - continued

TABLE OF CONTENTS - continued

TABLE OF CONTENTS - continued

TABLE OF CONTENTS - continued

LIST OF ILLUSTRATIONS

LIST OF ILLUSTRATIONS - continued

LIST OF TABLES

HOW TO USE THIS MANUAL

DESCRIPTION OF THE MANUAL.

Manual Organization. This manual is designed to help you operate and maintain the 5 kW Power Plants and Power Units, AN/MJQ-35, AN/MJQ-35A, AN/MJQ-36, PU-797, and PU-797A. Warning pages are located in the front of this manual. Read the warnings before operating or doing maintenance on the equipment.

The major elements of this manual are its chapters and appendices. Each chapter has one or more sections. The Table of Contents, beginning on page i, is provided for quick reference to the subjects covered by each chapter, section, and appendix. Except for chapter 6, each chapter also has a chapter index. The chapter index lists the chapter sections and paragraphs. Appendix F also has a table of contents to help you locate the items listed in that appendix.

The front cover of this manual has an index that lists the most important areas of the manual. Each item indexed on the front cover has a black box at the edge of the cover. There is a corresponding black box on the first text page for each subject listed on the cover index.

A glossary follows the last appendix. The glossary lists and explains the special or unique abbreviations and the unusual terms used in this manual.

An alphabetical index follows the glossary. That index is for use in locating specific items of information.

Chapters. This manual has five chapters and eight appendices. Each chapter is divided into sections. Each section is divided into descriptive paragraphs. The paragraphs have specific information about the power plants and power units and their major components.

Paragraph Numbering. All paragraphs are numbered. This helps you find what you need when you need it USE THE TABLE OF CONTENTS OR ALPHABETICAL INDEX TO FIND THE SECTION OR PARAGRAPH YOU NEED. Some paragraphs have a related illustration, to show the items discussed in the paragraph. Also, some paragraphs have a related table that provides a detailed list of items introduced by the paragraph. Each primary paragraph, illustration, and table is identified by the number of the chapter in which it appears, followed by a dash and another number. The number after the dash indicates the sequence in which the paragraph, illustration, or table appears in the chapter. Some paragraphs are further divided into subparagraphs. Subparagraphs are identified by the number of the primary paragraph followed by a decimal number, as follows:

Examples: 4-5. is the fifth paragraph in chapter 4.
4-5.1 is the first subparagraph of paragraph 4-5.
4-5.2 is the second subparagraph of paragraph 4-5.
4-5.2.1 is the first subparagraph under 4-5.2.
Figure 3-3. is the third illustration in chapter 3.
Table 2-1. is the first table in chapter 2.

Appendices. Each appendix covers a specific subject; sometimes general, such as the list of references in Appendix A; or sometimes very detailed, such as the repair parts and special tools list in Appendix F.

CHAPTER 1 INTRODUCTION.

Chapter 1 provides an introduction to the power plants and power unit. It is divided into three sections, as follows:

Section I- General Information. This section provides general infomation about this manual and the related forms and records. Instructions are provided for making equipment improvement recommendations. Coverage includes a reference to the TM that contains instructions on destruction of materiel to prevent enemy use. Also, a nomenclature cross-reference list is provided.

Section II - Equipment Description. This section describes power plant and power unit capabilities, characteristics, and features. It provides basic equipment data and shows the locations of mqjor power plant and power unit components. Descriptions of the major components are also provided.

Section III - Principles of Operation. This section provides fictional descriptions of the power plants and power unit.

CHAPTER 2 - OPERATING INSTRUCTIONS.

Chapter 2 provides instructions for operating the power plants and power unit. The chapter is divided into four sections, as follows:

Section I - Description and Use of Operator's Controls and Indicators. This section provides references to the applicable generator set technical manuals and trailer technical manuals. Those references contain information on operator's controls and indicators for the generator sets and trailers. Detailed coverage is provided for the power plant switch box controls and indicators.

Section II - Operator Preventive Maintenance **Checks and Services** (PMCS). This section contains detailed instructions for the before, during, and after operation preventive maintenance checks and services that the operator must perform. Coverage includes all operator PMCS for the generator sets and trailers that make up the power plants and power unit. Operator PMCS for the switch box used on the power plants is also covered.

Section III - Operation Under Usual Conditions. This section contains instructions for preparing the power plants and power unit for use and operating them under normal conditions. Coverage includes instructions for connecting power plant load to the switch box and operating the switch box. Instructions for comecting power unit load to the generator set are also covered. This section also covers preparation of the power plant or power unit for movement to a new worksite.

Section IV - Operation Under Unusual Conditions. This section provides references to the applicable generator set and trailer technical manuals.

CHAPTER 3- OPERATOR MAINTENANCE.

Chapter 3 covers maintenance of the power plants and power unit that is to be performed by the operator. Its purpose is to provide you with the information you need to keep the equipment in good operating condition. The chapter is divided into three sections, as follows:

Section I - Operator Lubrication. This section provides references to the applicable lubrication instructions.

Section II - Troubleshooting. This section covers troubleshooting procedures and corrective actions that are to be performed by the operator. This section also provides references to the applicable generator set and trailer technical manuals.

Section III - Maintenance Procedures, This section refers the operator to the preventive maintenance checks and services required by section II of chapter 2.

CHAPTER 4 - UNIT MAINTENANCE.

Chapter 4 provides instructions covering the power plant and power unit maintenance that must be performed at unit level. The chapter is divided into eight sections, as follows:

Section I - Repair Parts; Special Tools Test, Measurement, and Diagnostic Equipment (lTMDE); and Support Equipment. This section lists references that contain the required information.

Section II - Service Upon Receipt. This section contains instructions for inspecting and servicing each power plant and power unit when it is received. It includes instructions for unpacking the equipment when it is received. The instructions include unpacking and stowing the basic issue items that accompany the power plant or power unit. Also included are instructions on positioning the power plant or power unit for operation and connecting an external fuel source.

Section 111- Unit Lubrication. This section lists the applicable references that contain lubrication instructions for the generator sets and trailers. It also contains specific lubrication instructions for power plantipower unit components not covered in the generator set or trailer references.

Section IV - Unit Preventive Maintenance Checks and Services (PMCS). This section contains instructions covering the PMCS that must be performed at the unit maintenance level. A table provides information on maintenance intervals and actions required.

Section V - Troubleshooting. This section covers troubleshooting procedures and corrective actions that are to be performed at the unit maintenance level.

Section VI - Maintenance Procedures. This section lists the applicable references that cover unit maintenance of the generator sets and trailers. It also contains detailed instructions on unit level maintenance of the power plant and power unit components that are not covered in the generator set and trailer references.

Section VII - Administrative Storage. This section provides information on short term, intermediate term, and long term storage of Power Plants and Power Units.

CHAPTER 5- DIRECT SUPPORT MAINTENANCE.

Chapter 5 provides instructions for the maintenance actions designated to be performed at the direct support maintenance level. The chapter is divided into two sections, as follows:

Section I - Repair Parts Special Tools Test, Measurement. and Diagnostic Equipment and Support Equipment. This section lists the documents that contain the needed information.

Section II - Troubleshooting. This section covers troubleshooting procedures and corrective actions that are to be performed at direct support maintenance level.

Section II - Maintenance Procedures. This section lists the references that contain direct support maintenance instructions for the generator sets and trailers. In addition, it contains detailed instructions for direct support maintenance of power plant and power unit components not covered in the generator set and trailer references.

APPENDICES.

Appendix A - References. This appendix lists all publications that are referenced in the various chapters of the technical manual. The listing includes the title of each publication.

Appendix B - Maintenance Allocation Chart (MAC). This appendix has four sections, as follows:

Section I - Introduction. This section explains what is covered in the maintenance allocation chart.

Section II - Maintenance Allocation Chart. This section contains a tabular listing that assigns maintenance functions to specific maintenance levels. It lists the work time needed to perform each maintenance function at the assigned level. It also contains a column that has entries keyed to the tools and equipment listed in section III. Another column with entries keyed to the remarks in section IV.

Section III - Tool and Test Equipment Requirements. This section contains complete identification information for the items referenced in the tools and equipment column of section II.

Section IV - Remarks. This section provides additional information for each entry in the remarks column of section II.

Appendix C - Components of End Item (COEI) and Basic Issue Items (BII) Lists. This appendix lists the items that are usually packaged separately but needed for instigation and operation of the power plants and power units. The appendix has three sections, as follows:

Section I - Introduction. This section explains what is covered in section II and section III.

Section II - Components of End Item. The power plants and power units are normally shipped fully assembled, so this section is not applicable.

Section III - Basic Issue Items. This section contains a list of the accessories needed for installation and operation of the power plants and power units.

Appendix D - Additional Authorization List (AAL). This appendix lists additional items you are authorized for support of the power plant/power unit.

Appendix E - Expendable and Durable Items List. This appendix lists expendable/durable supplies and materials needed to operate and maintin the power plants and power units. The appendix contains two sections, as follows:

Section I - Introduction. This section explains the entries in section 11.

Section II - Expendable and Durable Supplies and Materials List. The list indicates the maintenance level that needs each item and identifies the items by National Stock Number, description, and unit of measure.

Appendix F - Repair Parts and Special Tools List (RPSTL). This appendix lists and authorizes the repair parts and special tools needed b perform unit, direct Support, and general Support maintenance of the power plants and power units. It contains four sections, as follows:

Section I - Introduction. This section explains what is covered in sections II, III, and IV.

Section II - Repair Parts List. This section contains illustrations and lists. The illustrations aid in identification of the parts. The lists include information that tells which maintenance levels are authorized to use the part, the part number that identifies the part, the name of the part, and the quantity used.

Section III - Special Tools Lisk This section informs the user that no special tools are needed.

Section IV - Cross-Reference Indexes. This section contains two indexes, a national stock number index and a part number index. Each index lists all of the parts contained in section II. The national stock number index is in National Item Identification Number (NIIN) sequence. The part number index is in alphanumeric part number sequence.

Appendix G - Illustrated List of Manufactured Items. This appendix provides instructions for making the items authorized to be manufactured or fabricated at the unit maintenance level and direct support maintenance level.

Appendix H - Torque Limits. This appendix lists standard torque values for bolts and screws used in the power plants and power units.

Glossary. The Glossary has two sections, as follows:

Section I - Abbreviations. This section lists the special or unique abbreviations used in this technical manual. Special or unique abbreviations are those not listed in MIL-STD-12D.

Section II - Definition of Unusual Terms. This section lists and defines the terms used in this technical manual that are not listed in the Army dictionary (AR 310-25).

INDEX.

An alphabetical index at the back of this technical manual provides a listing of subjects covered, cross--referenced to the applicable paragraph.

HOW TO FIX A POWER PLANT OR POWER UNIT MALFUNCTION.

Determining the Cause. Finding the cause of a malfunction, troubleshooting, is the first step in fining the power plant or power unit and returning it to operation. Follow these simple steps to determine the root of the problem:

a. Turn to the Table of Contents in this manual (page i).

b. Locate "Troubleshooting" under the chapter that covers your level of maintenance. Turn to the page indicated.

c. For operator troubleshooting, follow the instructions in the references listed in Chapter 3.

d. For troubleshooting at the unit maintenance level, find the malfunction listing in the trouble-shooting symptom index. Follow the instructions in the figure (troubleshooting chart) indicated by the symptom index.

Preparing for a Task. Be sure that you understand the entire maintenance procedure before beginning any maintenance task. Make sure that all parts, materials, and tools are handy. Read through all steps before beginning. Prepare to do the task as follows:

a. Carefully read the entire task before starting. It tells you what you will need and what you have to know to start the task. DO NOT START THE TASK UNTIL:

(1) You know what is needed

(2) You have everything you need

(3) You understand what to do

b. If parts are listed, they can be drawn from technical supply. Before you start the task, check to make sure you can get the needed parts. National stock numbers (NSNs) and part numbers for generator set parts are listed in the generator Repair Parts and Special Tools List (RPSTL) manual, TM 9-6115-641-24P, and the engine RPSTL manual, TM 9-2815-252-24P. NSNs and part numbers for the 1-ton trailer chassis parts are listed in TM 9-2330-202-14&P. NSNs and part numbers for the 1 1/2-ton trailer chassis parts are listed in TM 9-2330-213-14&P. NSNs and part numbers for the high mobility trailer chassis parts are listed in TM 9-2330-392-14&P. NSNs and part numbers for the next higher assembly (the power plant or power unit, less generator set(s) and trailer chassis) are listed in Appendix F.

c. If expendable/durable supplies or materials are needed, get them before starting the task. Refer to Appendix E for the correct nomenclature and NSN.

How to do the Task. Before starting, read the entire task. Be sure that you understand the entire procedure before you begin the task. As you read, remember the following:

a. PAY ATTENTION TO WARNINGS, CAUTIONS, AND NOTES.

b. Use the GLOSSARY if you do not understand the special abbreviations or unusual terms used in this manual.

c. The following are standard maintenance practices. Instructions about these practices are usually not included in task steps. When standard maintenance practices do not apply, the task step . will tell you. The standard maintenance practices are:

(1) Tag electrical wiring before disconnecting it.

(2) Discard used preformed packing, retainers, gaskets, cotter pins, lock washers, and similar items. Install new parts to replace the discarded items.

(3) Coat packings before installation, in accordance with the task instructions.

(4) Disassembly procedures describe the disassembly needed for total authorized repair. You may not need to disassemble an item as far as described in the task. Follow the disassembly steps only as far as needed to repair/replace worn or damaged parts.

(5) Clean the assembly, subassembly, or part before inspecting it.

(6) Before installing components having mating surfaces, inspect the mating surfaces to make sure they are in serviceable condition.

(7) Hold the bolt (or screw) head with a wrench (or screwdriver) while tightening or loosening a nut on the bolt (or screw).

(8) Torque to the special torque cited when the task instructions include the words "torque to." Use standard torques at all other times.

(9) When a cotter pin is required, align the cotter pin holes within the allowable torque range.

(10) Inspect for foreign objects after performing maintenance.

CHAPTER 1

INTRODUCTION

Subject Index Page

Section I. GENERAL INFORMATION

1-1 SCOPE.

This manual is for your use in operating and maintaining the Power Plant, AN/MJQ-35 (figure 1-1); Power Plant, AN/JQ-36 (figure 1-2); Power Plant, AN/MJQ-35A (figure 1-2.1); Power Unit, PU-797A (figure 1-2.2); and Power Unit, PU-797 (figure 1-3). The manual covers operating instructions and operator, unit, and direct support maintenance requirements for the power plants and power unit. It also contains a Repair Parts and Special Tools List (RPSTL) for the power plants and power unit The power plants and power unit are mobile. The power plants and power unit may be used to supply electric power to any system or equipment requiring up to 5 kW of 60 Hz power.

1-2 MAINTENANCE FORMS AND RECORDS.

Department of the Army forms and procedures used fr equipment maintenance will be those prescribed by DA Pam 738-750 (The Army Maintenance Management System (TAMMS)) (Maintenance Management UPDATE).

1-3 DESTRUCTION OF ARMY MATERIEL TO PREVENT ENEMY USE.

Destruction of Army materiel to prevent enemy use shall be in accordance with TM 750-244-3.

1-4 PREPARATION FOR STORAGE OR SHIPMENT.

Refer to Chapter 4, Section VII.

1-5 REPORTING EQUIPMENT IMPROVEMENT RECOMMENDATION (EIR).

If your power plant or power unit needs improvement, let us know. Send us an EIR. You, the user, are the only one who can tell us what you don't like about your equipment. Let us know why you don't like the design or performance. Put it on SF 368 (Product Quality Deficiency Report). Mail it to us at Commander, U.S. Army Aviation and Troop Command, ATTN: AMSAT-I-MDO, 4300 Goodfellow Boulevard, St. Louis, MO 63120-1798. We will send you a reply.

1-4 NOMENCLATURE CROSS-REFERENCE LIST.

Refer to table 1-1 for nomenclature cross-reference list.

Table 1-1. Nomenclature Cross-Reference List

Common Name	Official: Nomenclature
AN/MJQ-35	Power Plant, Diesel Engine Driven, 1 Ton Trailer Mounted, 5 kW, 60 Hz
AN/MJQ-35A	Power Plant, Diesel Engine Driven, High Mobility Trailer Mounted, 5 kW, 60 Hz
AN/MJQ-36	Power Plant, Diesel Engine Driven, 1 1/2 Ton Trailer Mounted, 5 kW, 60 Hz
PU-797	Power Unit, Diesel Engine Driven, 1 Ton Trailer Mounted, 5 kW, 60 Hz
PU-797A	Power Unit, Diesel Engine Driven, High Mobility Trailer Mounted, 5 kW, 60 Hz
MEP-802A	Generator Set, 5 kW, 60 Hz
M103A3	Chassis, Trailer: 1 1/2 Ton, 2 Wheel (altered)
M116A3	Chassis, Trailer: 1 Ton, 2 Wheel (altered)
HMT	Chassis, Trailer: High Mobility, 2 Wheel (altered)

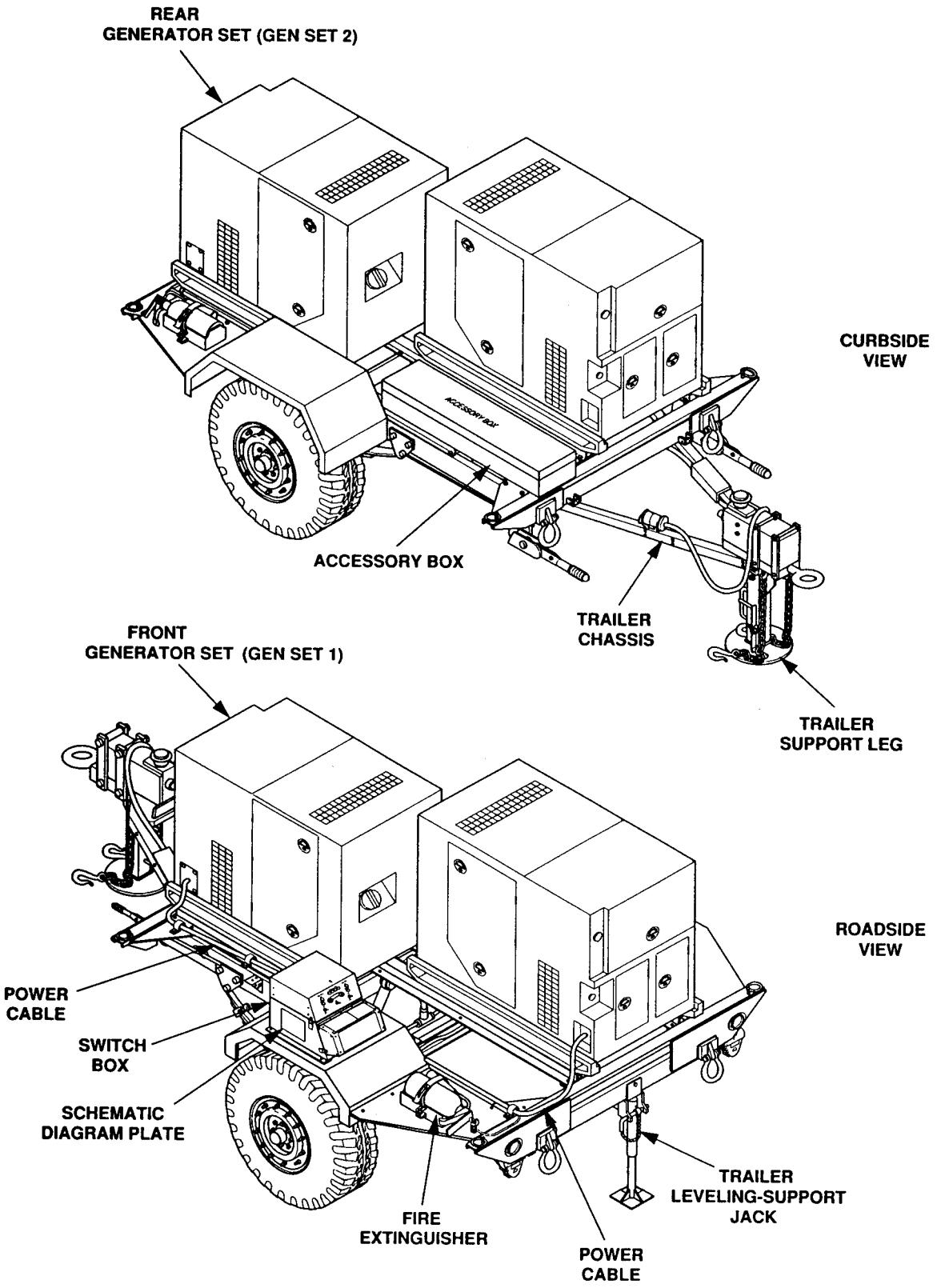

Figure I-1. Features of AN/MJQ-35.

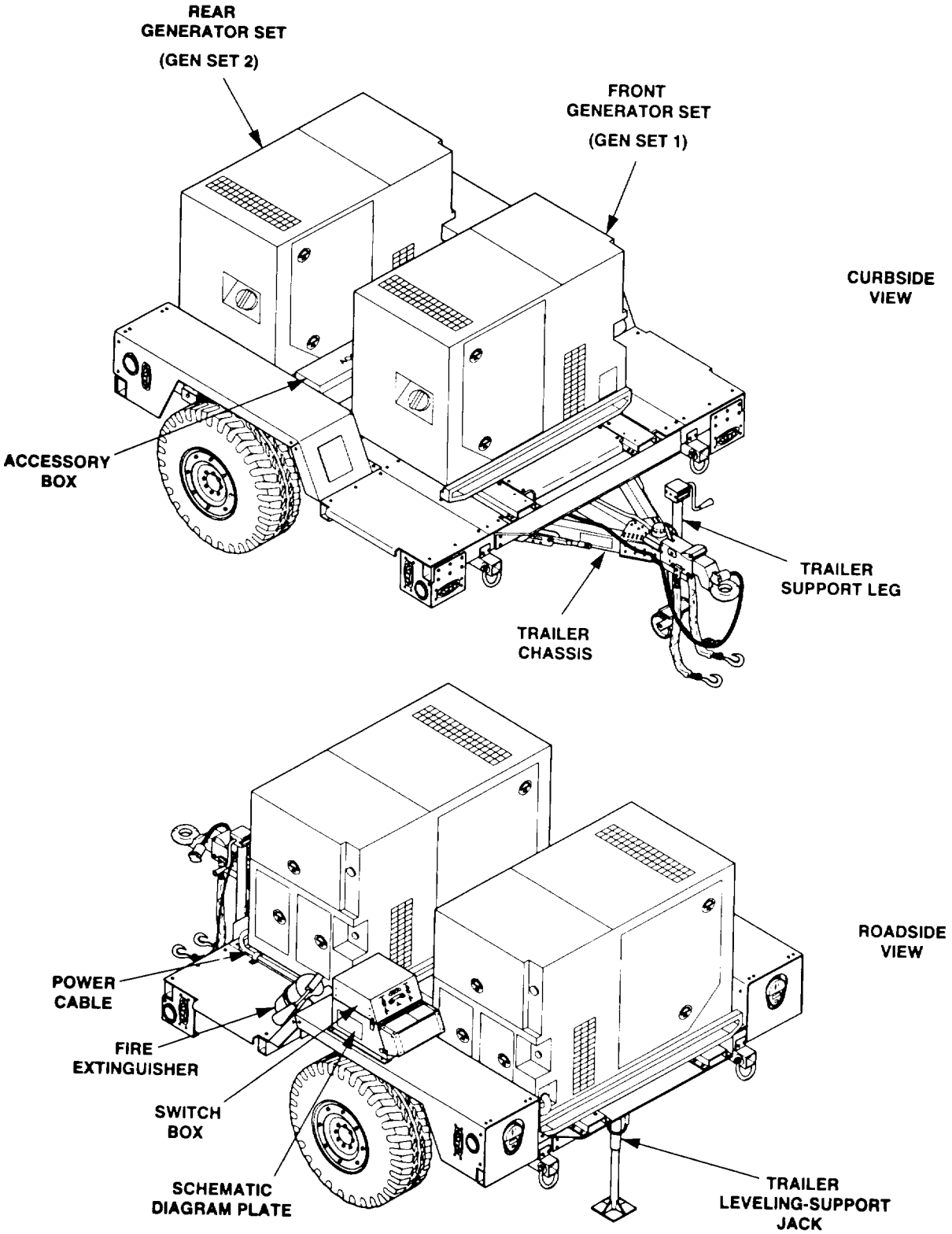

Figure 1-2 1. Features AN/MJQ-A.

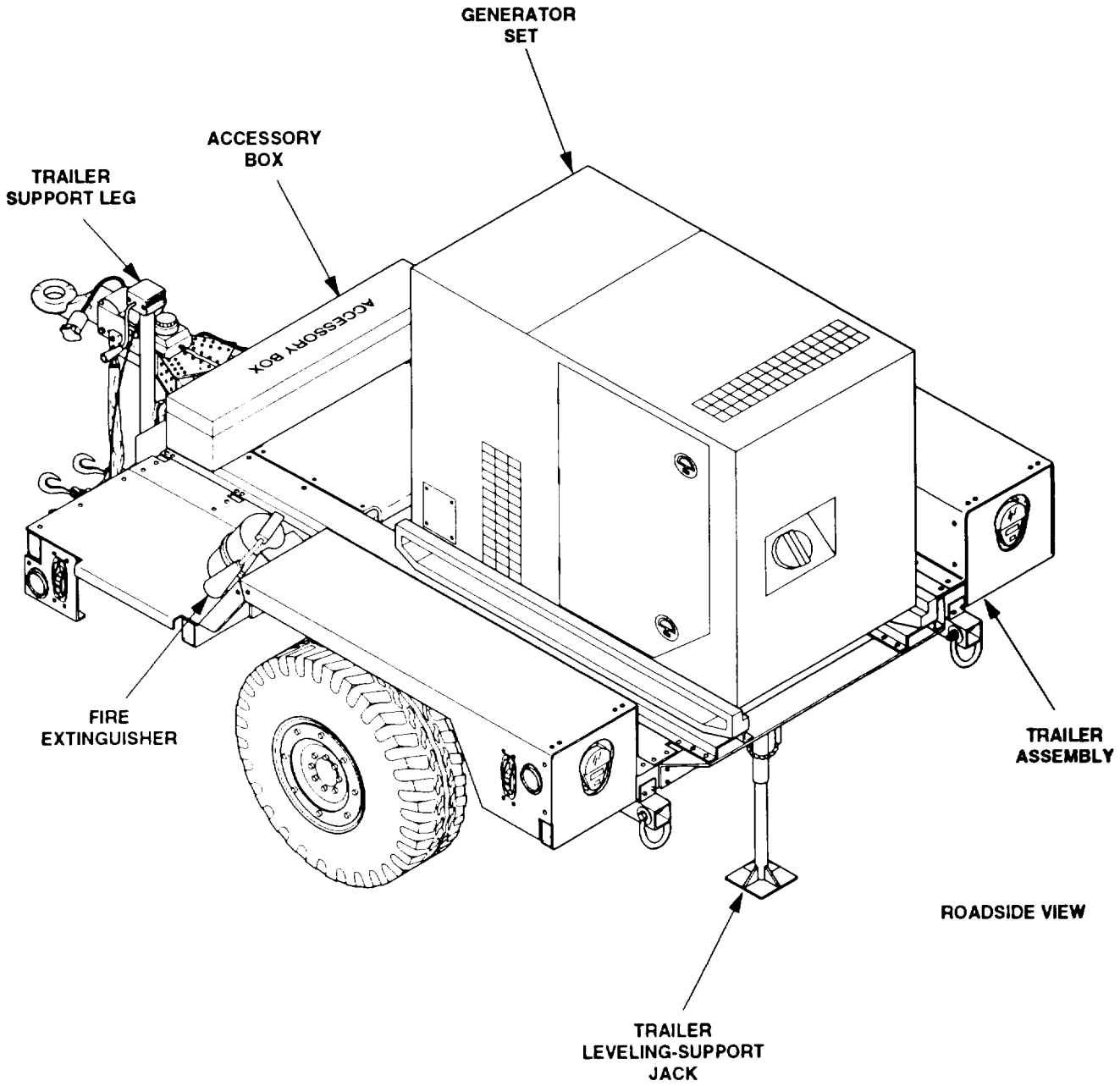

Figure 1-2.2. Features of PU-797A.

Section II. EQUIPMENT DESCRIPTION

1-9 EQUIPMENT CHARACTERISTICS, CAPABILITIES, AND FEATURES.

1-9.1 Characteristics. The power plants and power unit consist of one or two DOD Model MEP-802A Tactical Quiet Generator Sets mounted on modified M116A3, 1 ton, M103A3, 1 1/2 ton, or High Mobility trailers. Refer to TM 9-2330-202-14&P for detailed equipment characteristics about the M116A3, TM 9-2330-213-14&P for information about the M103A3, and TM 9-2330-392-14&P for information about the high mobility trailer. The modifications to the trailers include generator mounting rails, special lifting rings, special orders, accessory box, fire extinguisher brackets, and rear leveling-support jack. Each generator set is a liquid-cooled, diesel engine driven unit, operating at 60 Hz with a load capacity of 5 kW. Refer to TM 9-6115-641-10 for detailed equipment characteristics about the generator set.

1-9.1.1 Power Plant AN/MJQ-35. This power plant has two generator sets and a switch box mounted on a modified 1 ton trailer.

1-9.1.2 Power Plant AN/MJQ-36. This power plant has two generator sets and a switch box mounted on a modified 1 L/2 ton trailer.

1-9.1.3 Power Unit PU-797. This power unit has one generator set mounted on a modified 1 ton trailer.

1-9.1.4 Power Unit PU-797A. This power unit has one generator set mounted on a modified high mobility trailer.

1-9.1.5 Power Plant AN/MJQ-35A. This power plant has two generator sets and a switch box mounted on a modified high mobility trailer.

1-9.2 Capabilities and Features.

1-9.2.1 Power Plants AN/MJQ-35 and AN/MJQ-35A

TOWING VEHICLE	
AN/MJQ-35	CUCV or HMMWV
AN/MJQ-35A	HMMWV
TIRE PRESSURE (Highway)	35 psi (241.3 kPa)
ELECTRICAL OUTPUT - 60 Hz:	
120 volts, sine phase, 2 wire	52 amps
120/240 volts, single phase, 3 wire	26 amps
120/208 volts, three phase, 4 wire	17 amps

1-9.2.2 Power Plant AN/MJQ-36.

TOWING VEHICLE	2 1 ton 6x6 or 5 ton 6x6
TIRE PRESSURE (Highway)	35 psi (241.3 kPa)
ELECTRICAL OUTPUT - 60 Hz:	
120 volts, single phase, 2 wire	52 amps
120240 volts, single phase, 3 wire	26 amps
120/208 volts, three phase, 4 wire	17 amps

1-9.2.3 Power Units PU-797 and PU-797A.k

TOWING VEHICLE	
PU-797	CUCV or HMMWV
PU-797A	HMMWV
TIRE PRESSURE (Highway)	35 psi (241.3 kPa)
ELECTRICAL OUTPUT - 60 Hz:	
120 volts, single phase, 2 wire	52 amps
120/240 volts, single phase, 3 wire	26 amps
120/208 volts, three phase, 4 wire	17 amps

1-10. LOCATION AND DESCRIPTION OF MAJOR COMPONENTS.

Refer to figures 1-4, 1-5, and 1-6 and tables 1-2, 1-3, and 1-4.

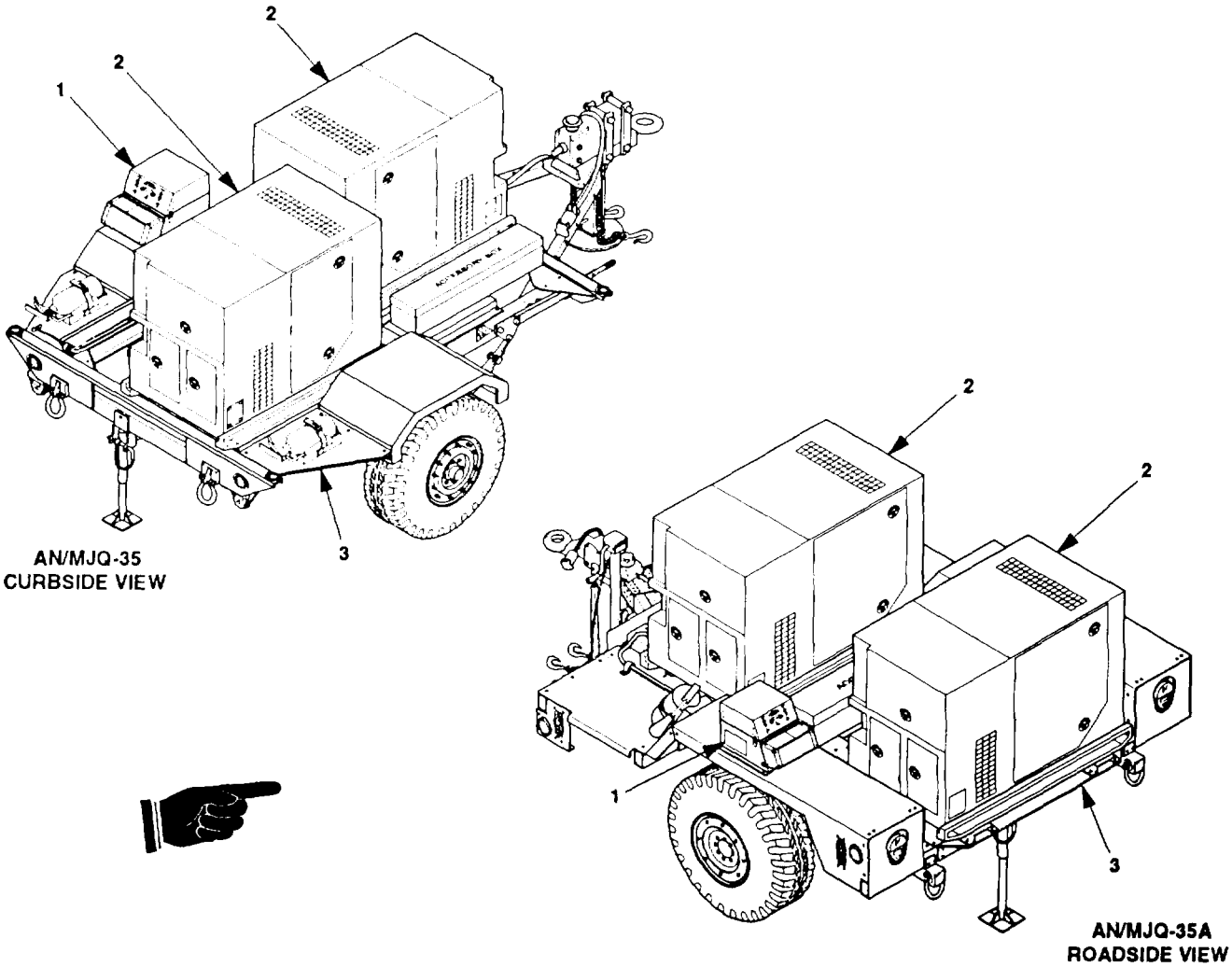

Figure 1-4. Location of Major Components, AN/MJQ-35 and AN/MJQ-35A.

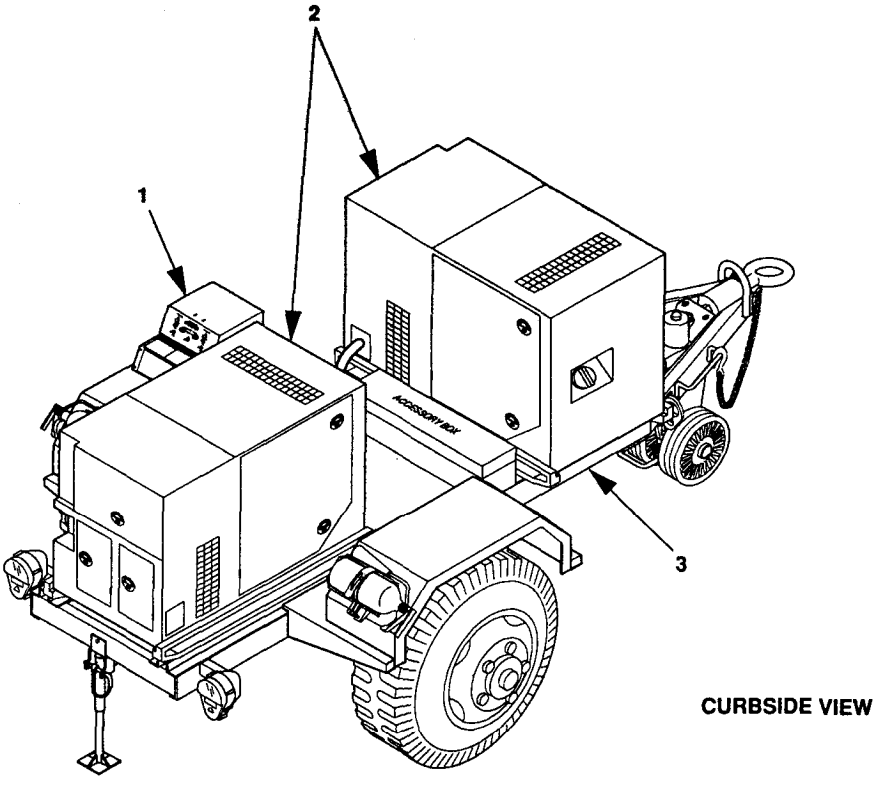

Figure 1-5. Location of Major Components, AN/MJQ-36.

Table 1-3. Description of Major Components. AN/MJQ45

Item No.	Item Name	Description
1	SWITCH BOX	Connects output of generator set to the load, and permits switching between generators without power loss.
2	GENERATOR SETS	Supplies power to the load. Refer to TM 9-6115-641-10 for major components of generator set.
3	TRAILER ASSEMBLY	Provides support and mounting for switch box, generator sets, and accessory box.

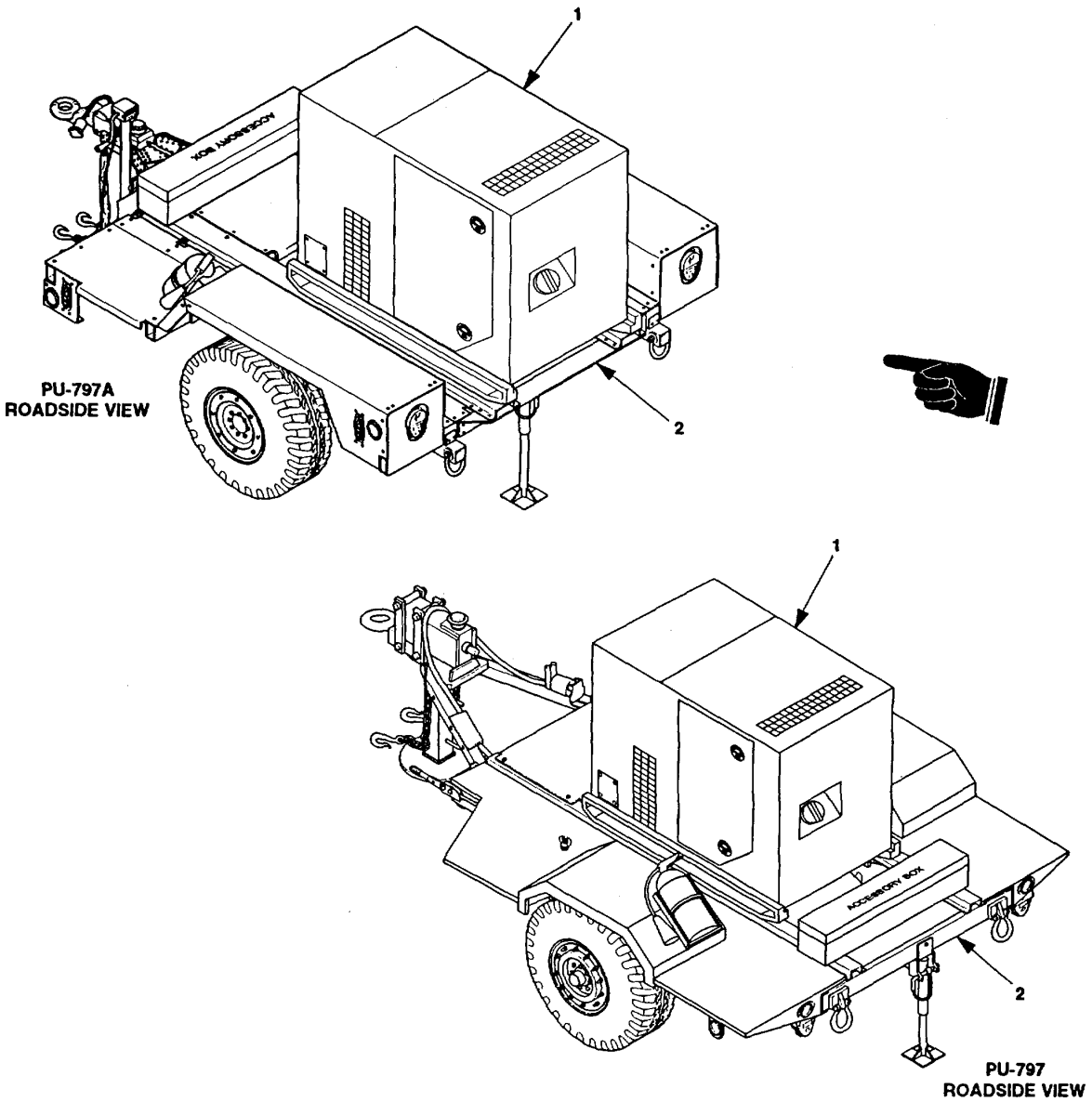

Figure 1-6. Location of Major Components, PU-797 and PU-797A.

Table 1-4. Description of Major Components, PU-797 and PU-797A

Item No.	Item Name	Description
1	GENERATOR SET	Supplies power to the load. Refer to TM 9-6115-641-10 for major components of generator set.
2	TRAILER ASSEMBLY	Provides support and mounting for generator set and accessory box.

1-11. DIFFERENCES BETWEEN MODELS.

Differences between the AN/MJQ-35, AN/MJQ-35A, AN/MJQ-36, PU-797, and PU-797A are identified in table 1-5. A number (quantity) under the applicable power plant or power unit column heading indicates that the item is a component of that power plant or power unit.

Table 1-5. Differences Between Models

Component	AN/MJQ-35	AN/MJQ-35A	AN/MJQ-36	PU-797	PU-797A
Generator Set, 60 Hz	2	2	2	1	1
Switch Box	1	1	1		
Trailer Chassis, 1 Ton, M116A3	1			1	
Trailer Chassis, 1 1/2 Ton, M103A31					
Trailer Chassis, High Mobility1		1			

1-12. EQUIPMENT DATA.

1-12.1 Generator Set. Refer to TM 9-6115-641-10.

1-12.2 Trailer Chassis.

1-12.2.1 AN/MJQ-35, 1 Ton Trailer Chassis. Refer to TM 9-2330-202-14&P.

1-12.2.2 AN/MJQ-36 1 1/2 Ton Trailer Chassis. Refer to TM 9-2330-213-14&P.

1-12.2.3 PU-797 1 Ton Trailer Chassis. Refer to TM 9-2330-202-14&P.

1-12.2.4 AN/MJQ-35A and PU-797A, High Mobility Trailer Chassis. Refer to TM 9-2330-392-14&P.

1-12.3 Tabulated Data for Power Plants/Power Units.

Table 1-6. Tabulated Data for Power Plants/Power Units

Data	AN/MJQ-35	AN/MJQ-35A	AN/MJQ-36	PU-797	PU-797A
Overall length, inches (cm)	154.0 (391.2)	135.0 (342.9)	165.0 (419.1)	145.0 (368.3)	135.0 (342.9)
Overall width, inches (cm)	83.5 (212.1)	86.0 (218.4)	83.0 (210.8)	83.5 (212.1)	86.0 (218.4)
Overall height, inches (cm)	74.0 (188.0)	66.0 (167.6)	70.2 (178.3)	76.0 (193.0)	66.0 (167.6)
Operational weight, pounds (kg)	3087 (1400.3)		3785 (1716.9)	2320 (1052.4)	
Shipping weight, pounds (kg)	3285 (1490.1)	3140 (1424.3)	3985 (1807.6)	2360 (1070.5)	2257 (1023.8)

Section III. PRINCIPLES OF OPERATION

1-13. FUNCTIONAL DESCRIPTION.

1-13.1 Power Plant Functional Description. The Power Plants are mobile. The power source for each power plant is two DOD Model MEP-802A 60 Hz Tactical Quiet 5 kW Generator Sets mounted on a single modified 2-wheel trailer. The AN/MJQ-35 is mounted on a modified Model M116A3, 1 ton, trailer. The AN/MJQ-35A is mounted on a modified high mobility trailer. The AN/MJQ-36 is mounted on a modified Model M103A3 1 1/2 ton trailer. Each generator set consists of a liquid-cooled diesel engine, brushless generator, excitation system, speed governing system, fuel system, 24-volt direct current starting system, control system, and malfunction protection system. The generator set has a voltage reconnection switch that allows either of three output configurations: 120-volt, single phase, 2-wire; 120/240-volt, single phase, 3-wire; or 120/208-volt, three phase, 4-wire. Electrical power to the supported system or equipment is supplied through a switch box assembly. The switch box assembly is connected between the two generator sets by power cables. The switch box enables transfer of the load from one generator set to the other without interruption of power. The system or equipment load cable may be connected to the switch box by either of two arrangements. One way is to connect a load cable to the switch box output connector. The other way is to connect a load cable to the switch box load terminals.

1-13.2 Power Unit Functional Description. The Power Units are mobile. The power source is one Tactical Quiet 5 kW Generator Set mounted on either a modified Model M116A3, 2-wheel, 1-ton trailer (PU-797) or a modified high mobility trailer (PU-797A). The generator set consists of a liquid-cooled diesel engine, brushless generator, excitation system, speed governing system, fuel system, 24-volt direct current starting system, control system, and malfunction protection system. The generator set has a voltage reconnection switch that allows either of three output configurations: 120-volt, single phase, 2-wire; 120/240-volt, single phase, 3-wire; or 120/208-volt, three phase, 4-wire. The Power Unit uses a DOD Model 802A Generator Set operating at 60 Hz. System or equipment load cables are to be connected to the load terminals on the generator set output panel.

1-14. RELATED TECHNICAL MANUALS.

Refer to Appendix A for related technical manuals and lubrication orders.

Section III. PRINCIPLES OF OPERATION

1-13. FUNCTIONAL DESCRIPTION.

1-13.1 Power Plant Functional Description. The Power Plants are mobile. The power source for each power plant is two DOD Model MEP-802A 60 Hz Tactical Quiet 5 kW Generator Sets mounted on a single modified 2-wheel trailer. The AN/MJQ-35 is mounted on a modified Model M116A3, 1 ton, trailer. The AN/MJQ-36 is mounted on a modified Model M103A3 1 l/2 ton trailer. Each generator set consists of a liquid-cooled diesel engine, brushless generator, excitation system, speed governing system, fuel system, 24-volt direct current starting system, control system, and malfunction protection system. The generator set has a voltage reconnection switch that allows either of three output configurations: 120-volt, single phase, 2-wire; 120/240-volt, single phase, 3-wire; or 120/208-volt, three phase, 4-wire. Electrical power to the supported system or equipment is supplied through a switch box assembly. The switch box assembly is connected between the two generator sets by power cables. The switch box enables transfer of the load from one generator set to the other without interruption of power. The system or equipment load cable may be connected to the switch box by either of two arrangements. One way is to connect a load cable to the switch box output connector. The other way is to connect a load cable to the switch box load terminals.

1-13.2 Power Unit Functional Description. The Power Unit is mobile. The power source is one Tactical Quiet 5 kW Generator Set mounted on a modified Model M116A3, 2-wheel, l-ton trailer. The generator set consists of a liquid-cooled diesel engine, brushless generator, excitation system, speed governing system, fuel system, 24-volt direct current starting system, control system, and malfunction protection system. The generator set has a voltage reconnection switch that allows either of three output configurations: 120-volt, single phase, 2-wire; 120/240-volt, single phase, 3-wire; or 120/208-volt, three phase, 4-wire. The Power Unit uses a DOD Model 802A Generator Set operating at 60 Hz. System or equipment load cables are to be connected to the load terminals on the generator set output panel.

1-14. RELATED TECHNICAL MANUALS.

Refer to Appendix A for related technical manuals and lubrication orders.

CHAPTER 2

OPERATING INSTRUCTIONS

Subject Index Page

Section I. DESCRIPTION AND USE OF OPERATOR CONTROLS AND INDICATORS

2-1 OPERATOR CONTROLS AND INDICATORS.

2-1.1 Generator Set. Refer to TM 9-6115-641-10.

2-1.2 Trailer. Refer to TM 9-2330-202-14&P for AN/MJQ-35 and PU-797, TM 9-2330-392-14&P for AN/MJQ-35A and PU-797A, and TM 9-2330-213-14&P for AN/MJQ-36.

2-1.3 Power Plant Switch Box Controls. Refer to figure 2-1 and table 2-1 for operator controls and indicators.

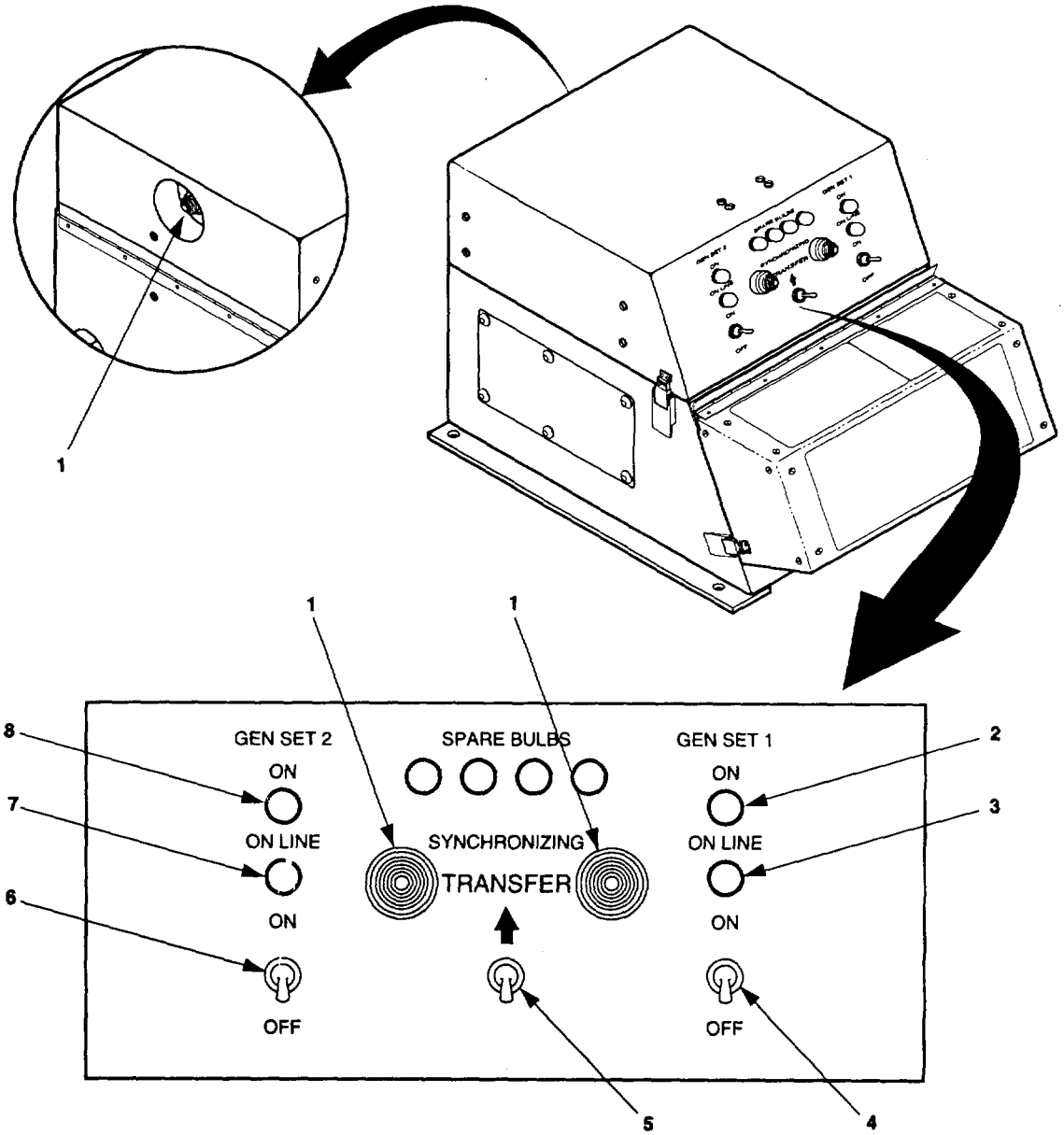

Figure 2-1. Switch Box Controls and Indicators.

Table 2-1. Description of Switch Box Controls and Indicators

Item No.	Description	Function
1	SYNCHRONIZING light	Used to synchronize generator sets for transferring load. All three lights are dark when only one generator set is operating. The lights simultaneously go from bright to dark and back to bright in repeated cycles after TRANSFER switch (5) is engaged while one generator set is on line and other is ready to go on line. All three are again dark after load has been transferred.
2	ON light for GEN SET 1 (front generator set)	Lights when front generator set is supplying power to switch box.
3	ON LINE light for GEN SET 1 (front generator set)	Lights when front generator set is supplying power to the load.
4	ON OFF switch for GEN SET 1 (front generator set)	Toggle switch, used to place front generator set on line when generator set is ready or take it off line before shutting it down.
5	TRANSFER switch	Toggle switch, used to transfer load when one generator set is on line and SYNCHRONIZING lights (1) indicate that other generator set is ready to go on line.
6	ON/ OFF switch for GEN SET 2 (rear generator set)	Toggle switch, used to place rear generator set on line when generator set is ready or take it off line before shutting it down.
7	ON LINE light for GEN SET 2 (rear generator set)	Lights when rear generator set is supplying power to the load.
8	ON light for GEN SET 2 (rear generator set)	Lights when rear generator set is supplying power to switch box.

Section II. OPERATOR PREVENTIVE MAINTENANCE CHECKS AND SERVICES (PMCS)

2-2 INTRODUCTION TO OPERATOR PMCS TABLE.

Table 2-2 (PMCS table) has been provided so you can keep your equipment in good operating condition and ready for its primary mission.

2-2.1 Warnings. Cautions. and Notes. Always observe the WARNIGS, ***CAUTIONS,*** and ***NOTES*** appearing in your PMCS table. Warnings and cautions appear before applicable procedures. You must observe **WARNIGS** to prevent serious injury to yourself and others. You must observe ***CAUTIONS*** to prevent your equipment from being damaged. You must observe ***NOTES to*** ensure procedures are performed properly.

2-2.2 Explanation of Table Entries.

2-2.2.1 Item No. Column. Numbers in this column are for reference. When completing DA Form 2404 (Equipment Inspection and Maintenance Worksheet), include the item number for the check/service indicating a fault. Item numbers also appear in the order that you must do checks and services for the intervals listed.

2-2.2.2 **Interval Column.** This column tells you when you must do the procedure in the procedure column. "Before" procedures must be done before you operate the power plant or power unit for its intended mission. "During" procedures must be done during the time you are operating the power plant or power unit for its intended mission. "After" procedures must be done immediately after you have operated a power plant, immediately after shutting down one of the generator sets on a power plant, or immediately after you have operated a power unit. Perform "Weekly" procedures at the listed interval.

2-2.2.3 **Location, Item to Check/Service Column.** This column lists the location and the item to be checked or serviced. The item location is underlined.

2-2.2.4 **Procedure Column.** This column gives the procedure for checking or servicing the item listed in the location, item to check/service column. You must perform the procedure to know if the power plant or power unit is ready or available for its intended mission or operation. You must do the procedure at the time stated in the interval column.

2-2.2.6 **Not Fully Mission Capable if: Column.** Information in this column tells you what faults will keep your power plant or power unit from being capable of performing its primary mission. If you make checks or services that show faults listed in this column, do not operate the power plant or power unit.

2-2.3 **Other Table Entries.** Be sure to observe all special information and notes that appear in your table.

2-2.4 **Special Instructions.** Preventive maintenance is not limited to performing the checks and services listed in the PMCS table. Covering unused receptacles, stowing unused accessories, and other routine procedures such as equipment inventory, cleaning components, and touch-up painting are not listed in the table. These are things you should do any time you see that they need to be done. If a routine check is listed in the PMCS table, it is because experience has shown that problems may occur with this item. Take along tools and cleaning cloths needed to perform the required checks and services. Use the information in the following paragraphs to help you identify problems at any time.

2-2.4.1 Trailer PMCS. Trailer checks and services in the PMCS table are described as performed on a specific model trailer. Refer to table 1-3 to determine appropriate model number.

2-2.4.2 **Generator Set PMCS.** Generator set checks and services in the PMCS table are described as

performed on a single generator set. The procedures must be performed on each of the generator sets that make up a power plant.

2-2.4.3 **Routine Inspections.** Use the following information to help identify potential problems before and during checks and Services.

WARNING

Dry cleaning solvent used to clean parts is potentially dangerous to personnel and property. Clean parts in a well-ventilated area. Avoid inhalation of solvent fumes. Wear goggles and rubber gloves to protect eyes and skin. Wash exposed skin thoroughly. Do not smoke or use near open flame or excessive heat. Failure to observe this warning could cause severe personal injury or death.

CAUTION

Keep cleaning solvents, gasoline, and lubricants away from rubber or soft plastic parts. They will deteriorate material.

a. Keep it clean. Dirt, grease, and oil get in the way and may cover up a serious problem. Use dry cleaning solvent to clean metal surfaces.

b. Use soap and water to clean rubber or plastic parts and material.

c. Check all bolts, nuts, and screws to make sure they are not loose, missing, bent, or broken. Do not try to check them all with a tool, but look for chipped paint, bare metal, or rust around bolt heads. If you find one loose, tighten it or report it to unit level maintenance.

d. Inspect welds. Look for loose or chipped paint, rust, or gaps where parts are welded together. If a broken weld is found, report it to unit level maintenance.

e. Inspect electrical wires, connectors, terminals, and receptacles. Look for cracked or broken insulation, bare wires, and loose or broken connectors. Tighten loose connectors and make sure wires are in good condition. Examine terminals and receptacles for serviceability. If deficiencies are found, report them to unit level maintenance.

f. Inspect hoses and fluid lines. Look for wear, damage, and leaks. Make sure that clamps and fittings are tight. Wet spots and stains around a fitting or connector can mean a leak. If a leak comes from a loose connector, or if something is broken or worn out, report it to unit level maintenance.

2-2.5 **Leakage Definitions.** You must know how fluid leakage affects the status of your equipment. The following are definitions of the types/classes of leakage you need to know to be able to determine the status of your equipment. Learn and be familiar with them. When in doubt, *notify your supervisor.*

Leakage Class	Leakage Definition
Class I	Seepage of fluid (as indicated by wetness or discoloration) not great enough to form drops.
Class II	Leakage of fluid great enough to form drops, but not enough to cause drops to drip from the item being checked/inspected.

Class III Leakage of fluid great enough to form drops that fall from the item being checked/inspected.

2-2.6 Operation of Power Plant/Power Unit with Minor Leaks.

CAUTION

Equipment operation is allowable with minor leakage (Class I or II) of any fluid except fuel. Fluid capacity must be considered before deciding to continue operation of the equipment with minor leaks. When operating with Class I or II leaks, fluid level must be checked more often than required by the PMCS table. Parts without fluid will stop working and/or cause equipment damage.

a. Consider the equipment's capacity for the fluid that is leaking. If the capacity is small, the fluid level may soon become too low for continued operation. If in doubt, notify your supervisor.

b. Check the fluid level more often than required in the PMCS table. Add fluid as needed.

2-2.7 Corrosion Prevention and Control (CPC). CPC of Army materiel is of continuing concern. It is important that any corrosion problems with the power plant or power unit be reported so that the problem can be corrected and improvements can be made to prevent the problem in future items. While corrosion is typically associated with rusting of metals, it can also include deterioration of other materials, such as rubber and plastic. Unusual cracking, softening, swelling, or breaking of these materials may be a corrosion problem. If a corrosion problem is identified, it can be reported using Standard Form 368, Product Quality Deficiency Report. Use of key words such as "corrosion, " "rust, " "deterioration, " or "cracking" will ensure that the information is identified as a CPC problem. The form should be submitted to the address specified in DA Pam 738-750.

2-2.8 Order in Which PMCS Will be Done. Figures 2-2, 2-3, 2-3.1, 2-3.2, and 2-4 show the order in which you are to perform your before operation PMCS . Figure 2-2 is for the AN/MJQ-35, figure 2-3 is for the AN/MJQ-36, figure 2-3.1 is for the AN/MJQ-35A, figure 2-3.2 is for the PU-797A, and figure 2-4 is for the PU-797. The number callouts on all figures correspond to the numbers in the Item No. column of table 2-2. Callouts on figures 2-2, 2-3, and 2-3.1 for one Power Plant generator set apply to both of the Power Plant generator sets.

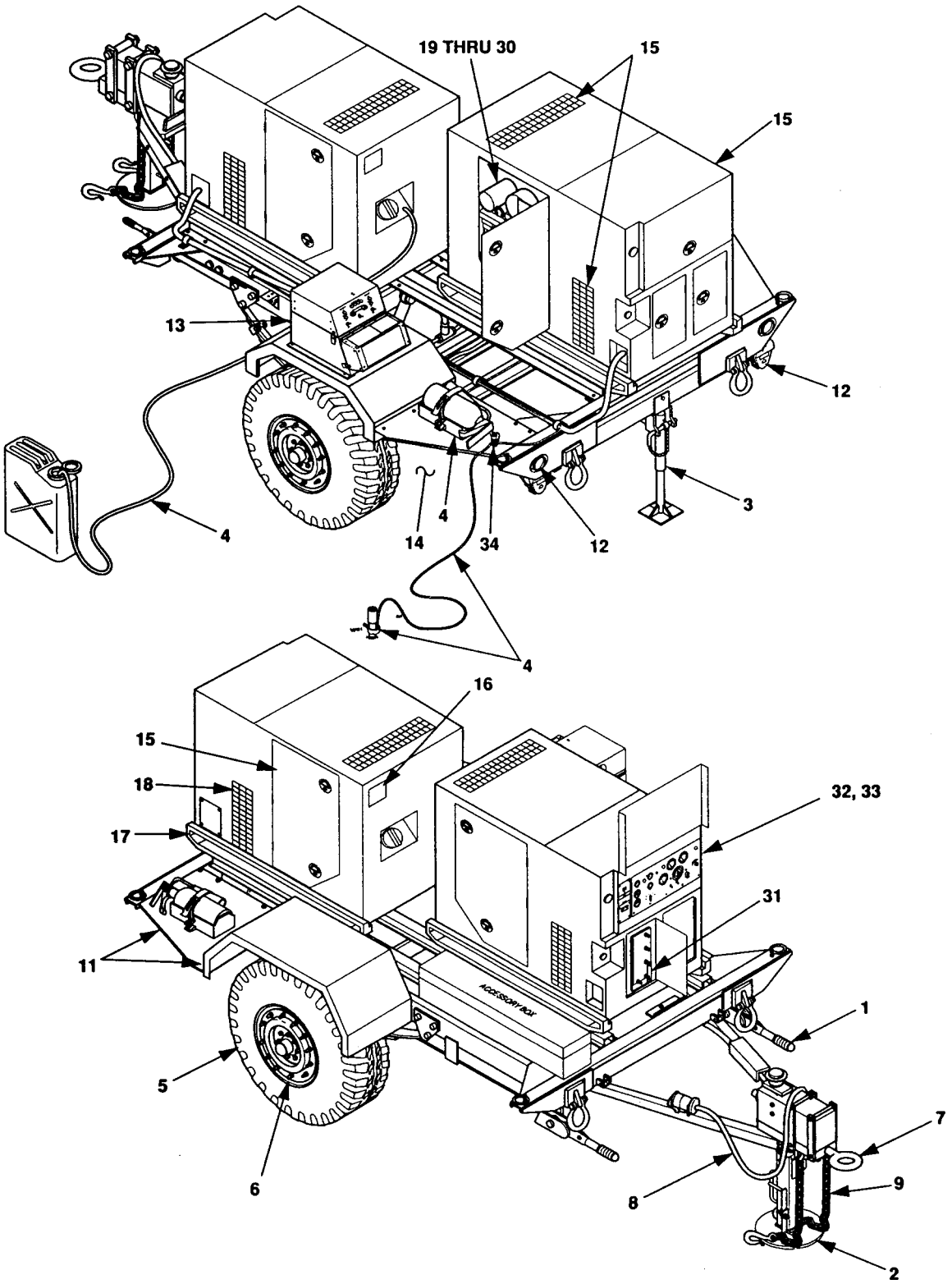

Figure 2-2. AN/MJQ-35 Power Plant Operator PMCS Routing Diagram.

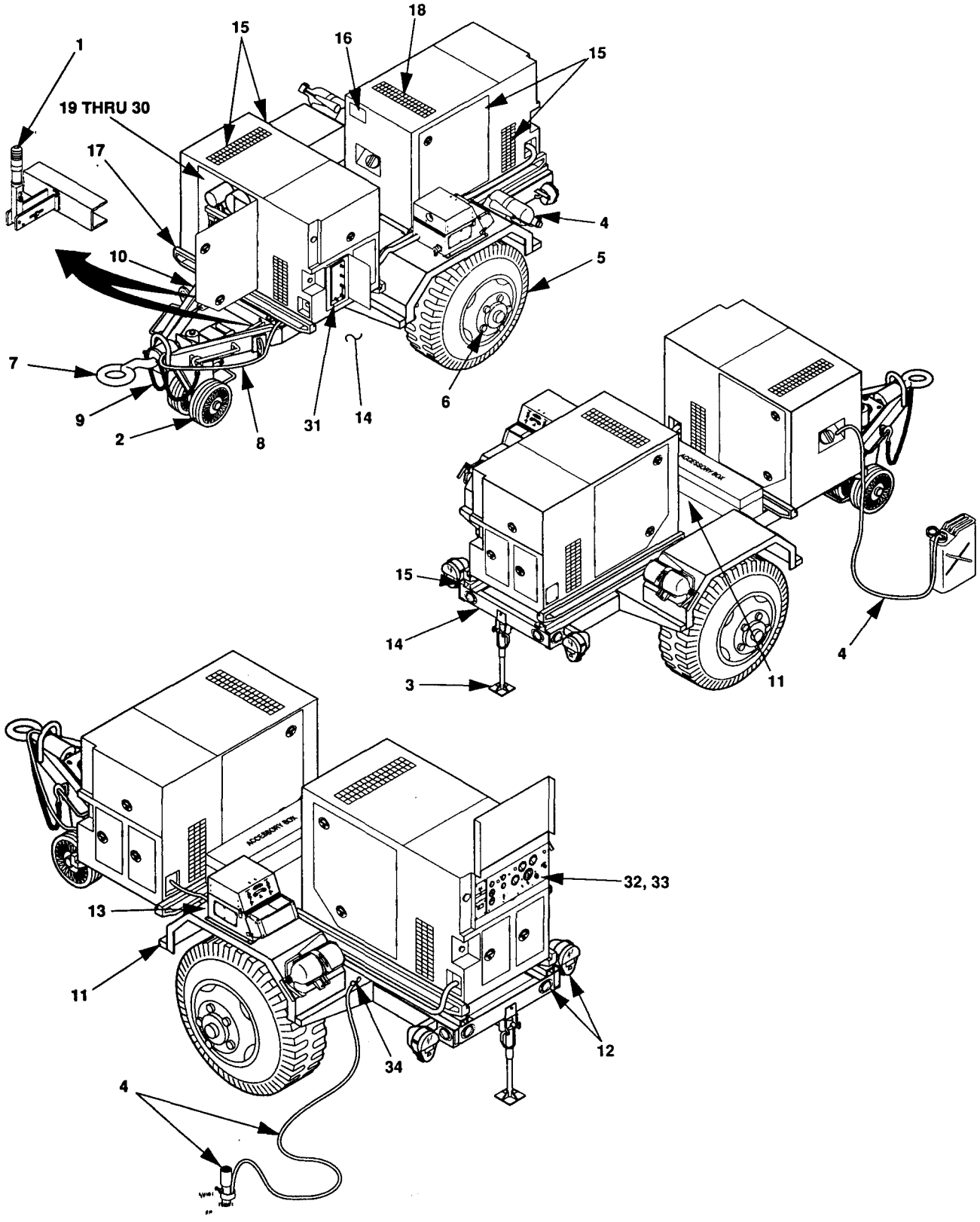

Figure 2-3. AN/MJQ-36 Power Plant Operator PMCS Routing Diagram.

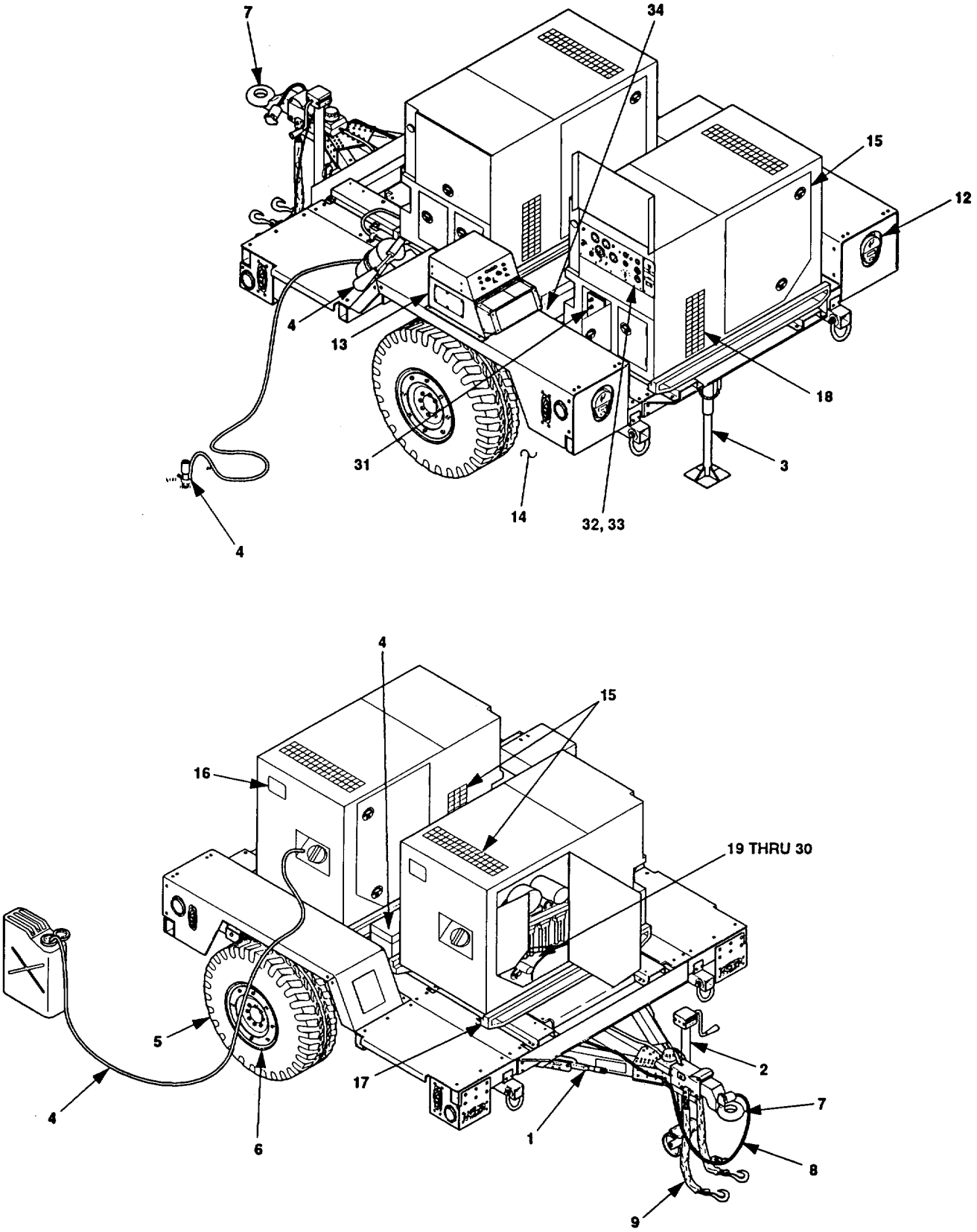

Figure 2-3.1. AN/MJQ-35A Power Plant Operator PMCS Routing Diagram.

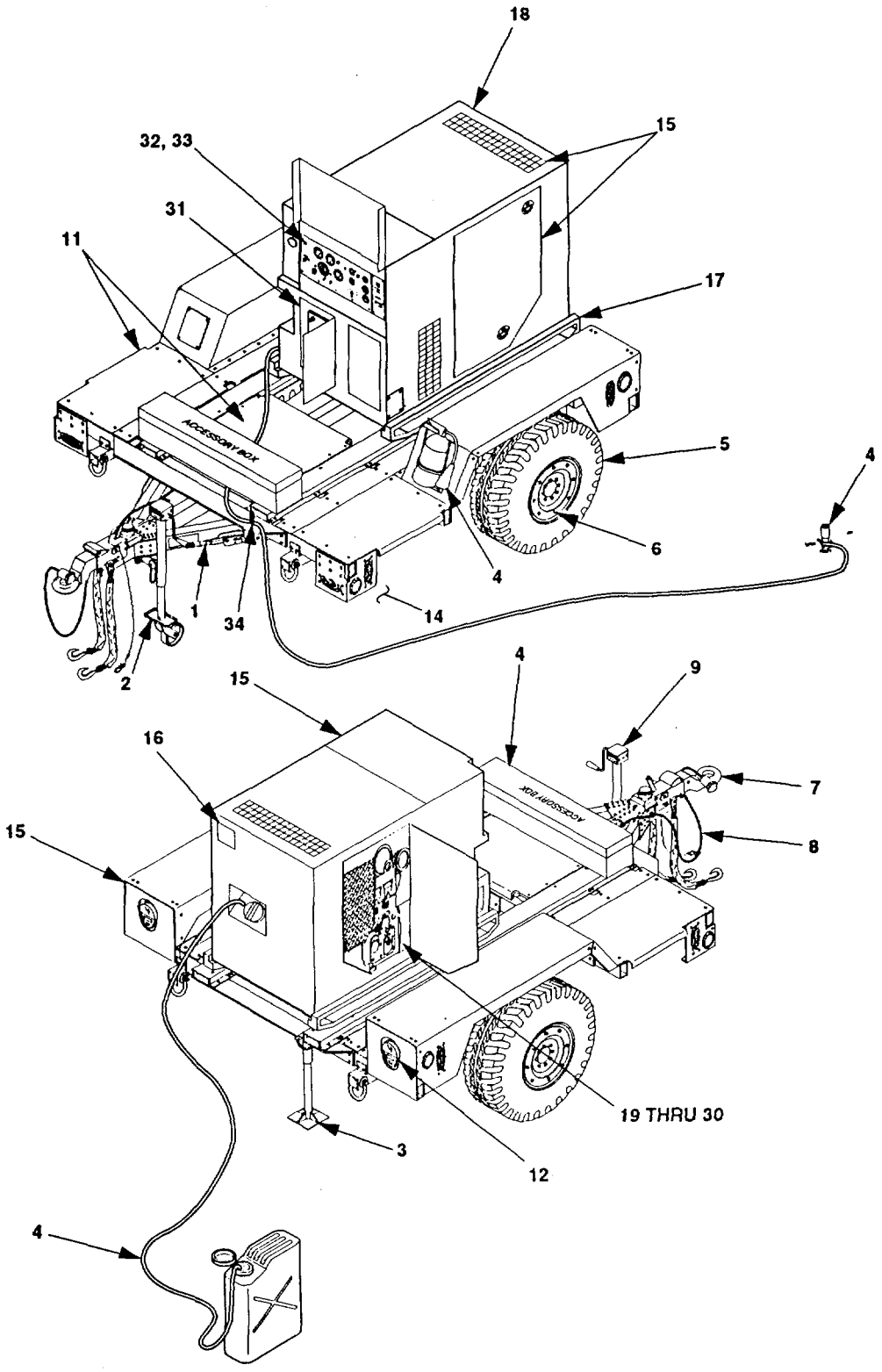

Figure 2-3.2 PU-797A Power Unit Operator PMCS Routing Diagram.

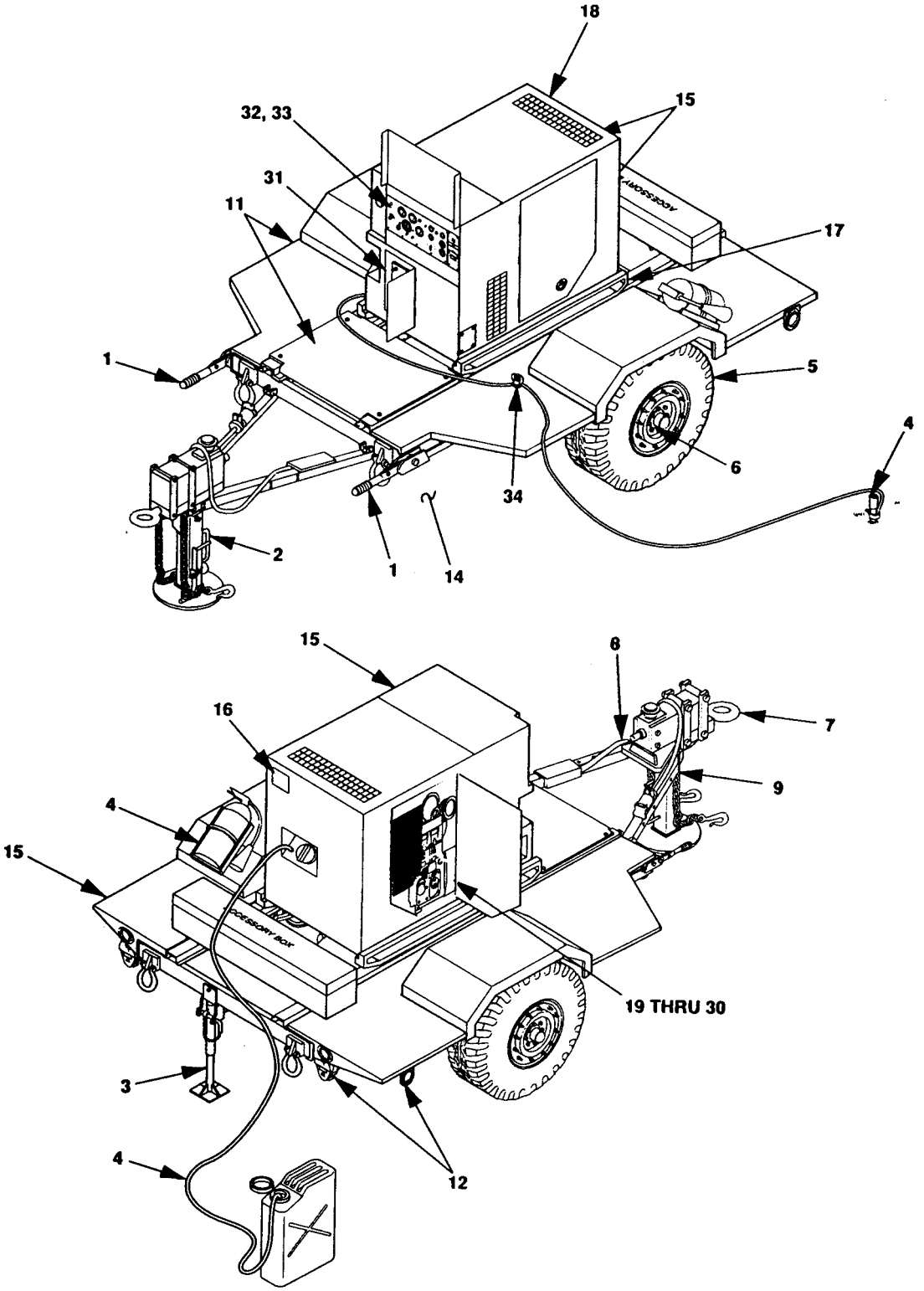

Figure 2-4. PU-797 Power Unit Operator PMCS Routing Diagram.

Table 2-2. Operator Preventive Maintenance Checks and Services

NOTE

If the equipment must be in continuous operation, check and service only those items that can be checked and serviced without disturbing operation. Make the complete checks and services when the equipment can be shut down.

Item No.	Interval	Location Item to Check/Service	Procedure	Not Fully Mission Capable if:
			WARNING Before performing any maintenance that requires climbing on or under trailer, make sure that trailer handbrakes are set, and front and rear trailer support legs are lowered. Failure to observe this warning could result in severe personal injury or death.	
1	Before	**TRAILER** HANDBRAKES	a. Check for proper operation of handbrake lever (1). Handbrake lever should move freely throughout its entire travel. b. Check for proper adjustment of handbrake lever (1). Handbrake lever is properly adjusted when additional force is required to move handbrake lever beyond two-thirds distance of travel toward the applied position. If improperly adjusted, refer to step d. c. With trailer hooked to towing vehicle, set the handbrake lever (1). Move the trailer slightly to see if the handbrakes hold the wheels. If not, proceed to step d. 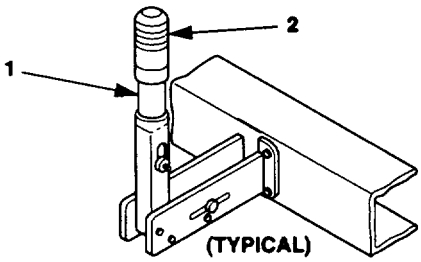	Handbrake lever (1) is locked in the applied position.

Table 2-2. Operator Preventive Maintenance Checks and Services - continued

Item No.	Interval	Location Item to Check/Service	Procedure	Not Fully Mission Capable if:
			WARNING If trailer is not coupled to towing vehicle, ensure that wheels are securely chocked. Failure to do so may cause trailer to roll, resulting in injury to personnel or damage to equipment. ***NOTE*** Both handbrake levers (1) are adjusted the same way. This procedure covers one handbrake lever.	
			d. Handbrake Lever Adjustment (1) Release handbrake lever (1). (2) Turn adjustment knob (2) clockwise to tighten or counterclockwise to loosen. If unable to adjust, or adjustment has been used up, refer to Unit Level Maintenance. (3) Check adjustment (Refer to step b). Repeat steps (1) and (2) as required. Repeat step c.	
2	Before	LANDING LEG ASSEMBLY	a. With trailer connected to towing vehicle, check landing leg assembly (3) for ease of operation. b. Check landing leg assembly (3) for proper mounting, alignment, and general condition. c. Ensure landing leg assembly (3) can be locked in stored and support positions. d. Ensure locking lever (4) moves freely. e. Ensure landing leg foot or wheels (5) can be adjusted up and down.	Landing leg assembly will not secure in stored position or will not support trailer.

Table 2-2. Operator Preventive Maintenance Checks and Services - continued

Item No.	Interval	Location Item to Check/Service	Procedure	Not Fully Mission Capable if:
			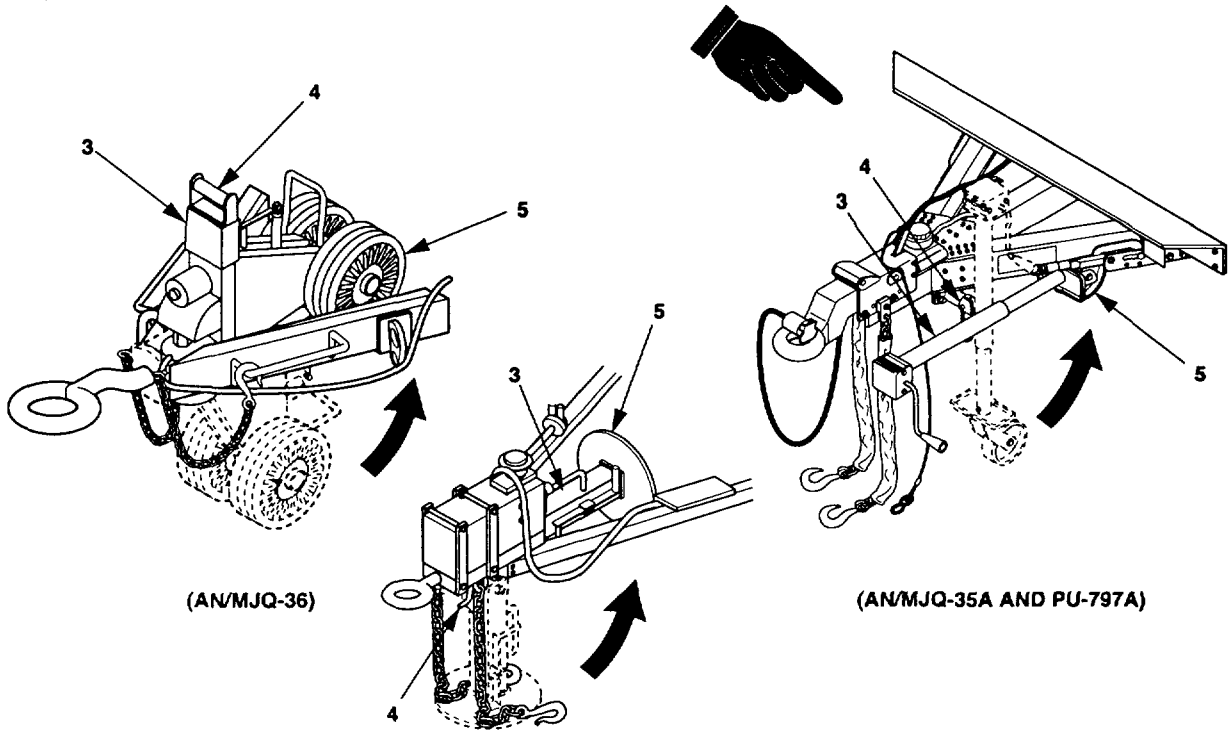	
3	Before	REAR LEVELING-SUPPORT JACK	a. Check rear leveling-support jack (6) for ease of operation. not secure in b. Check rear leveling-support jack (6) for secure mounting. trailer. c. Ensure rear leveling-support jack can be locked in stored and support positions. d. Ensure locking pin (7) is attached to leg with chain (8). e. Ensure leveling-support jack foot can be adjusted up and down.	Rear leveling-support jack will stored position or will not support

Table 2-2. Operator Preventive Maintenance Checks and Services

Item No.	Interval	Location Item to Check/Service	Procedure	Not Fully Mission Capable if:
		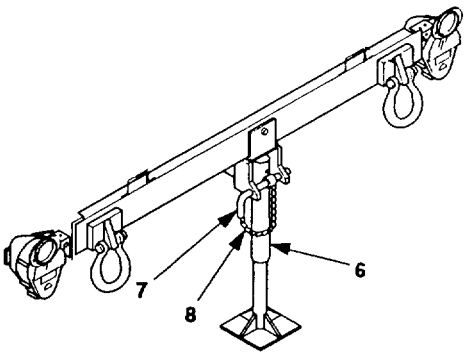 AN/MJQ-35 AN/MJQ-36 PU-797	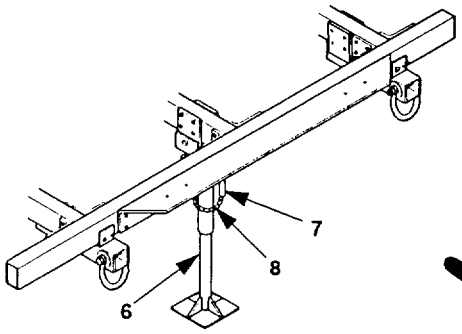 AN/MJQ-35A PU-797A	
4	Before	ACCESSORIES	Check that following accessories are not missing or damaged: Auxiliary fuel hose(s) (stored in storage box inside right access door under control box on generator). Fire extinguisher(s), check seal (stored in fire extinguisher bracket on fender). Check accessory box for damage or missing components. ***NOTE*** Remaining accessories are stored in accessory box. Container adapter Ground rod Hammer, 8 lb Load terminal wrench Slide hammer Ground cable	Fire extinguisher is missing, seal is broken.

Table 2-2. Operator Preventive Maintenance Checks and Services

Item No.	Interval	Location: Item to Check/Service	Procedure	Not Fully Mission Capable if:
5	Before	TIRES	a. Check tires (9) for cuts, bruises, bulges, or unusual tread wear. Remove any foreign objects from between treads.	One tire is missing or unserviceable.
			b. Check tire pressure when tires are cool, as follows:	Tire will not hold air pressure.
			Power Plant: AN/MJQ-35, AN/MJQ-35A, AN/MJQ-36 — Power Unit: PU-797, PU-797A	
			Highway — 35 psi (241.3 kPa)	35 psi

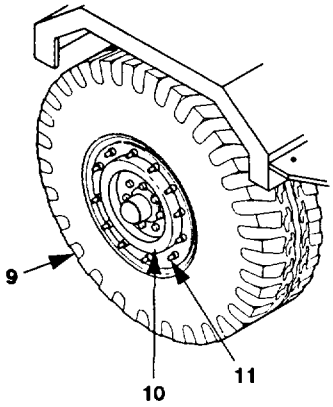

(AN/MJQ-35 AND PU-797)

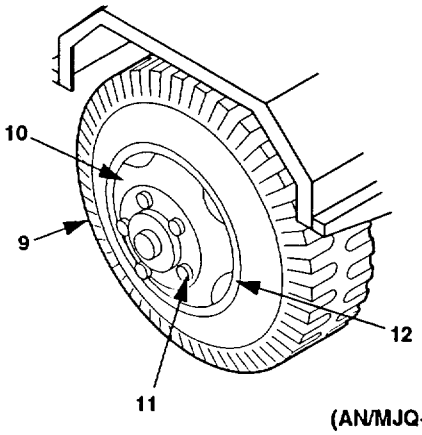

(AN/MJQ-36)

6	Before	WHEELS	a. Check wheels (10) for damage.	Wheel is damaged.
			b. Check if stud nuts (11) are loose or missing.	One stud nut is loose or missing.

WARNING

Do not attempt to seat a lockring when tire is inflated. Improperly seated lockring could fly off. Serious injury or death will result.

			c. Model AN/MJQ-36 only, check for proper mounting of wheel assembly lockring (12).	Lockring not properly seated.

Table 2-2. Operator Preventive Maintenance Checks and Services

Item No.	Interval	Location Item to Check/Service	Procedure	Not Fully Mission Capable if:
7	Before	DRAWBAR RING	Check drawbar ring (13) for secure mounting and obvious damage.	Ring is loose or bent.

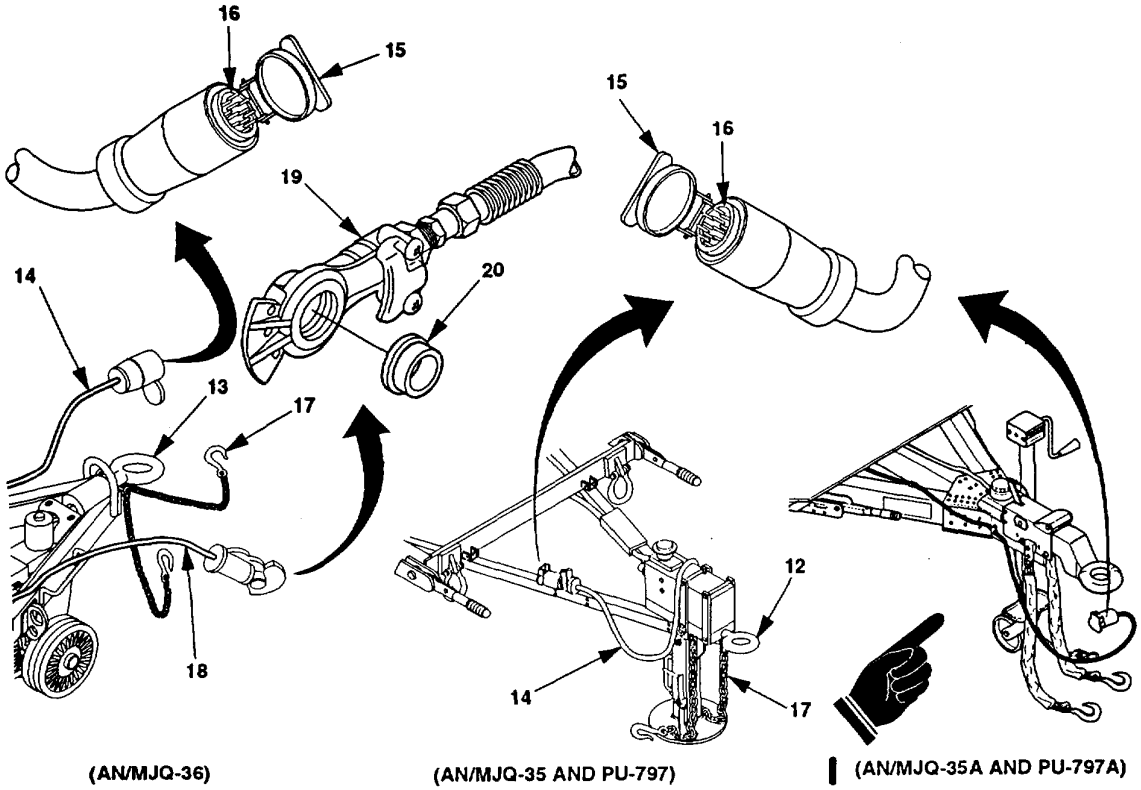

8	Before	INTERVEHICULAR CABLE	a. Check intervehicular cable (14) for cuts and breaks. b. Open protective cover (15). Inspect for broken, missing, and burnt pins (16).	Cable is severed or missing.
9	Before	SAFETY CHAINS	Check safety chains (17) for secure mounting and obvious damage.	Chain is missing or unsecured.
10	Before	AIR HOSE AND COUPLER (AN/MJQ-36 ONLY)	a. With trailer hooked to towing vehicle, check air hose (18) for leaks, cuts, and abrasions.	Air leaks are found or hose is cut deep enough for cords to show.
			b. Check coupler body (19) for damage. Check if seal (20) is missing or damaged.	Coupler body is cracked or broken. Seal is missing.

Table 2-2. Operator Preventive Maintenance Checks and Services

Item No.	Interval	Location Item to Check/Service	Procedure	Not Fully Mission Capable if:
11	Before	FENDERS-ALL MODELS PLATFORMS-ALL MODELS EXCEPT AN/MJQ-35 SPLASH GUARDS-AN/MJQ-35 ONLY	Check for damaged, loose, or missing hardware.	Damage is to extent where it poses a safety hazard or prevents trailer from being towed.
12	Before	LIGHTS AND REFLECTORS	a. Check for obvious damage or looseness of lights, lenses, and reflectors.	Lights are not serviceable.
			NOTE An assistant is required while checking the brake lights.	
			b. Connect the intervehicular cable (21) to the towing vehicle.	
			c. Operate the vehicle light switch through all settings and check the lights (22).	
			d. Check for damage and presence of reflectors (23).	

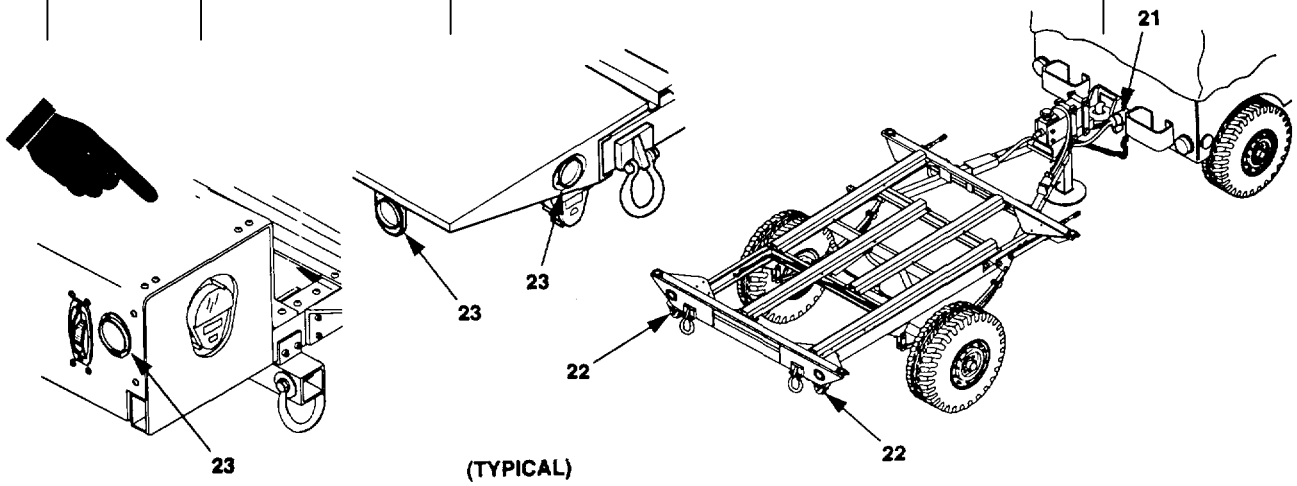

Table 2-2. Operator Preventive Maintenance Checks and Services

Item No.	Interval	Location Item to Check/Service	Procedure	Not Fully Mission Capable if:
13	Before	SWITCH BOX ASSEMBLY (POWER PLANTS ONLY)	a. Check for loose or missing mounting hardware.	Two or more mounting bolts missing.
			b. Check for damaged indicator lights.	Indicator lights are damaged.
			c. Check hinges and clamping catches.	
			d. Check for loose or damaged switches.	Switches loose or damaged.
			e. Check output terminals and connectors for damaged or missing hardware.	Output terminals or connectors will not properly secure load cables.
14	Before	HYDRAULIC BRAKES	Check for leakage of brake fluid from master cylinder (24), hydraulic brake lines and fittings (25), and backing plates (26).	Brake system any leak.

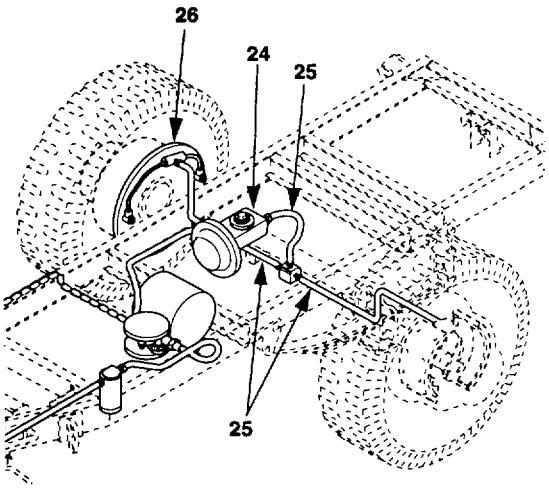

(AN/MJQ-36)

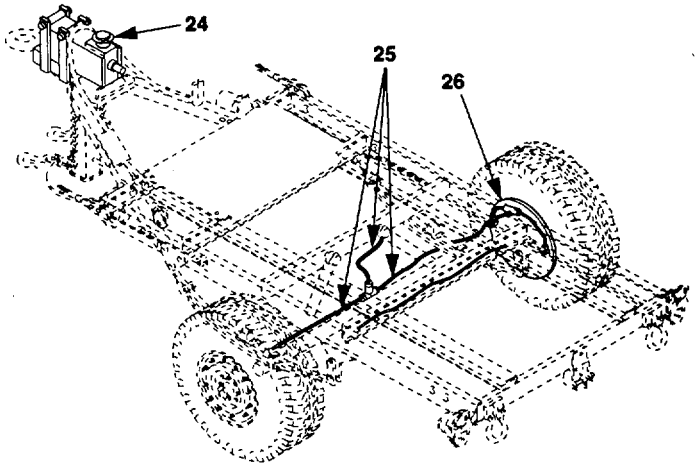

(AN/MJQ-35 AND PU-797)
(AN/MJQ-35A AND PU-797A)

Table 2-2. Operator Preventive Maintenance Checks and Services

Item No.	Interval	Location / Item to Check/Service	Procedure	Not Fully Mission Capable if:
		GENERATOR SET ASSEMBLY		
			NOTE If the equipment must be kept in continuous operation, check and service only those items that can be checked and serviced without disrupting operations. Complete all checks and services when equipment is shut down.	
15	Before	HOUSING	a. Check doors (27), panels (28), hinges (29), and latches (30) for damaged, loose, or corroded items. b. Inspect air intake and exhaust grills (31) for debris. ***NOTE*** Check all data plates.	Cannot secure door.
16	Before	IDENTIFICATION PLATES	Check to ensure identification plates (32) are secure and legible.	
17	Before	SKID BASE	Inspect skid base (33) for cracks and corrosion.	Skid base is cracked or shows signs of structural damage.

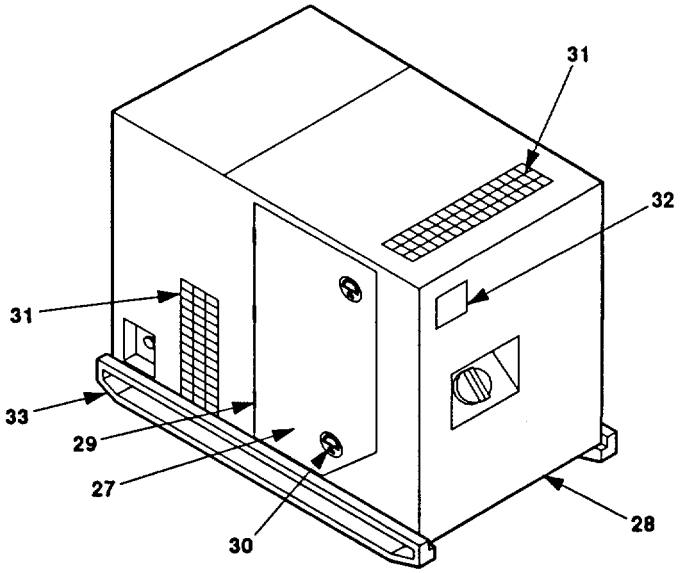

Table 2-2. Operator Preventive Maintenance Checks and Services

Item No.	Interval	Location: Item to Check/Service	Procedure	Not Fully Mission Capable if:
18	Before	ACOUSTICAL MATERIAL	Ensure acoustical materials, located in the grill areas and under the engine, are secure, not damaged, or missing.	

WARNING

With any access door open, the noise level of this generator set when operating could cause hearing damage. Hearing protection must be worn when working near the generator set while running.

WARNING

The fuels used in this generator set are highly explosive. Do not smoke or use open flame when performing maintenance. Flames and explosion can occur resulting in severe personal injury or death.

19	Before	ENGINE ASSEMBLY	Check for loose, damaged or missing hardware.	

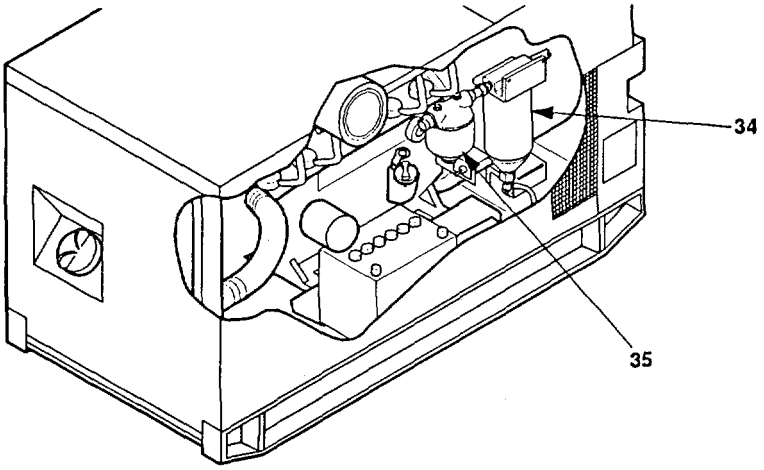

20	Before	FUEL SYSTEM	Inspect for leaks, damaged, loose, or missing hardware.	Any fuel leaks, damaged, loose, or missing parts.
21	Before	FUEL FILTER/ WATER SEPARATOR	a. Inspect fuel filter/water separator (34) and fuel filter (35) for leaks, proper mounting, cracks, damage, or missing parts.	Any fuel leaks.

Table 2-2. Operator Preventive Maintenance Checks and Services

Item No.	Interval	Location Item to Check/Service	Procedure	Not Fully Mission Capable if:
		FUEL FILTER/WATER SEPARATOR (continued)	b. Drain water from fuel filter/water separator (34).	
22	Before	LUBRICATION SYSTEM	a. Inspect lubrication system for leaks, damaged, loose, or missing parts.	Class III leaks, damaged, loose, or missing parts.
			b. Check oil level (36). Add as necessary.	
			c. Check engine oil for contamination.	Engine oil shows signs of contamination.

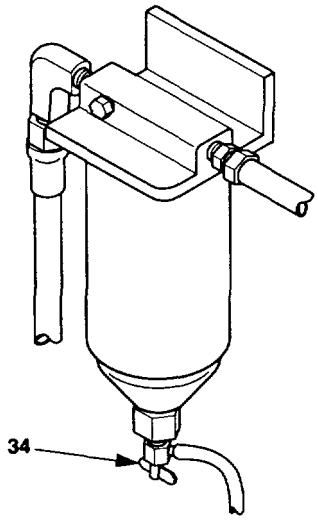

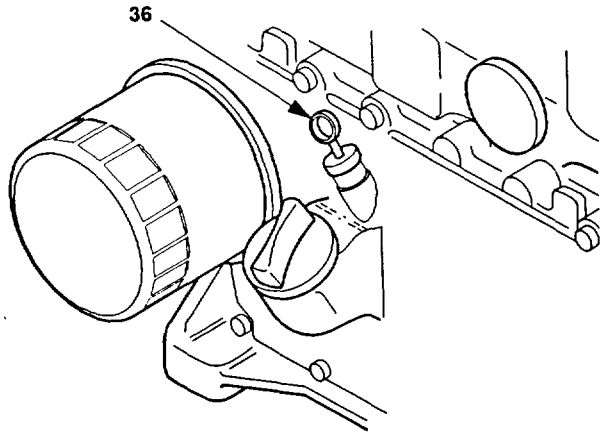

Table 2-2. Operator Preventive Maintenance Checks and Services

Item No.	Interval	Location Item to Check/Service	Procedure	Not Fully Mission Capable if:
			WARNING Cooling system operates at high temperatures. Personal injury or death from burns or scalding can result from contact with high pressure steam and/or liquid.	
23	Before	RADIATOR	Check radiator (37) for leaks, damaged, or missing parts.	Class III leaks. Radiator cap missing.
24	Before	HOSES	Check hoses (38) for leaks and cracks.	Class III leaks.
25	Before	COOLING FAN	Check fan (39) for damage or looseness.	Damaged or loose.
26	Before	FAN BELT	Inspect belt (40) for cracks, fraying, or looseness.	Broken belt.

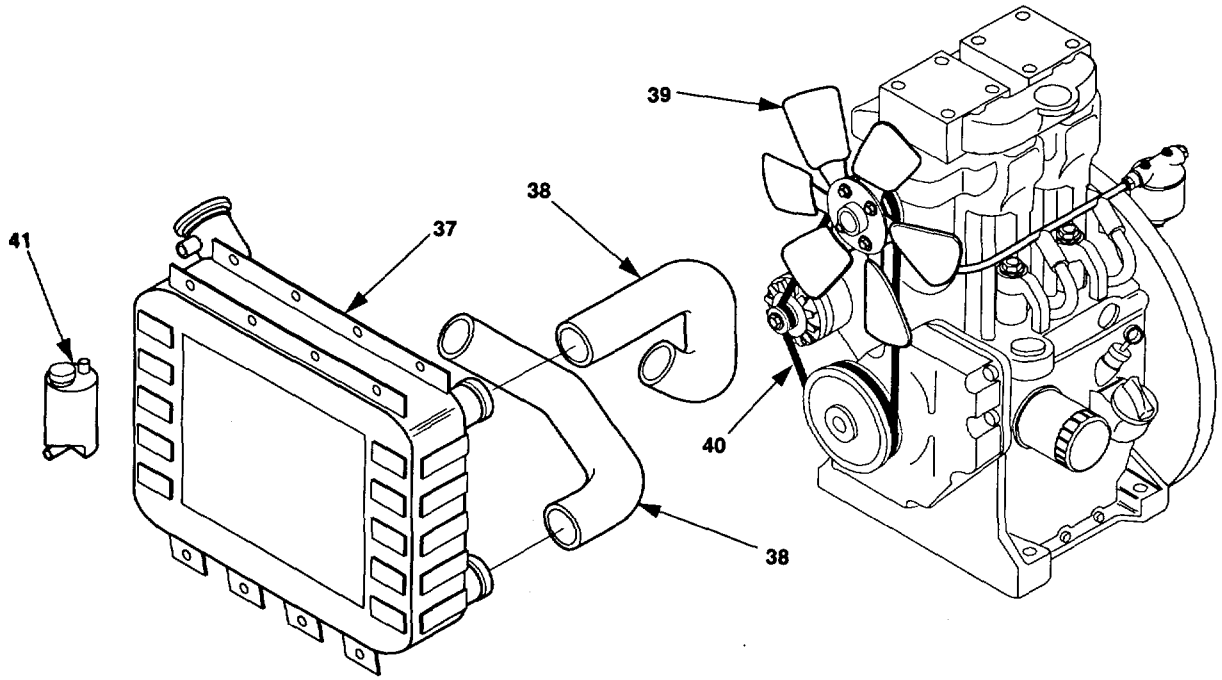

Table 2-2. Operator Preventive Maintenance Checks and Services

Item No.	Interval	Location: Item to Check/Service	Procedure	Not Fully Mission Capable if:
2	7Before	OVERFLOW BOTTLE	Check overflow bottle (41) for leaks or missing parts. Check coolant level.	Class III leaks.
			WARNING Exhaust discharge contains deadly gases. DO NOT operate generator set in enclosed areas unless exhaust discharge is properly vented outside. Severe personal injury or death due to carbon monoxide poisoning could result.	
28	Before	EXHAUST SYSTEM	Check muffler (42) for leaks and exhaust system for corrosion, damaged, or missing parts.	Muffler or exhaust system damaged or leaking.
29	Before	AIR CLEANER ASSEMBLY	a. Inspect air cleaner assembly (43) and piping (44) for loose or damaged connections.	Loose or missing parts.
			b. Inspect restriction indicator (45) for clogged element. If indicator shows red, notify next higher level of maintenance.	Clogged element is indicated or piping and connections are loose.

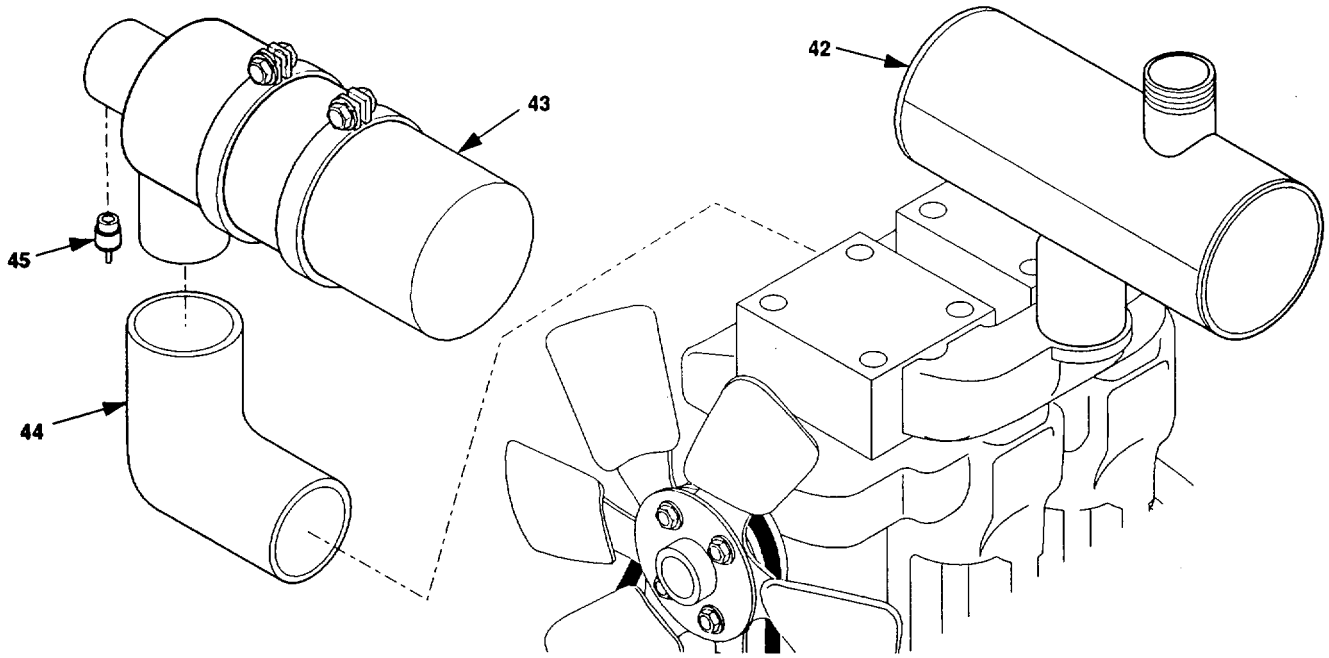

Table 2-2. Operator Preventive Maintenance Checks and Services

Item No.	Interval	Location Item to Check/Service	Procedure	Not Fully Mission Capable if:
			WARNING Battery acid can cause burns to unprotected skin.	
			WARNING Batteries give off a flammable gas. Do not smoke or use open flame when performing maintenance. Flames and explosion could result in severe personal injury or death.	
30	Before	BATTERY CABLES	Inspect cables and connectors for corrosion, damage, loose, or missing parts.	Cables are loose, damaged, or missing.
			WARNING High voltage is produced when this generator set is in operation. Personal injury or death due to electrocution could result.	
31	Before	OUTPUT BOX ASSEMBLY	a. Check for loose or damaged wiring or cables. b. Check output terminals for damage or missing hardware.	Loose or damaged wiring or cables. Damaged or missing hardware.
32	Before	CONTROLS AND INDICATORS	a. Check all indicators and controls for damage or missing parts. b. Press PUSH TEST RESET LAMPS button (46) on fault indicator. All lights must light.	Indicators or controls damaged or missing.

Table 2-2. Operator Preventive Maintenance Checks and Services

Item No.	Interval	Location / Item to Check/Service	Procedure	Not Fully Mission Capable if:
33	Before	CONTROL BOX HARNESS	Check inside control box for loose or damaged wiring.	Loose or damaged wiring.
34	Before	GROUND ROD CABLE AND CONNECTIONS	a. Inspect for damage, corrosion, and loose connections.	
			b. Inspect ground rod and cable for loose connections, breaks, damage and corrosion.	Cable is missing or damaged.
		TRAILER		
35	During	OPERATION	a. Be alert for any unusual noises while towing the trailer. Stop and investigate any unusual noises.	
			b. Ensure that the trailer is tracking/following correctly behind towing vehicle with no side pull.	
36	During	SWITCH BOX ASSEMBLY GENERATOR SET ASSEMBLY	Check indicator lights. Ensure indicator lights are operating properly.	
37	During	HOUSING	a. Check doors, panels, hinges, and clamping catches for damaged, loose, or corroded items.	Cannot secure door.
			b. Inspect air intake and exhaust grills for debris.	

Table 2-2. Operator Preventive Maintenance Checks and Services

Item No.	Interval	Location Item to Check/Service	Procedure	Not Fully Mission Capable if:
			WARNING With any access door open, the noise level of this generator set when operating could cause hearing damage. Hearing protection must be worn when working near the generator set while running. ***WARNING*** The fuels used in this generator set are highly explosive. Do not smoke or use open flame when performing maintenance. Flames and explosion can occur resulting in severe personal injury or death. ***WARNING*** Exercise extreme caution when performing "During" checks inside engine compartment. Avoid contact with moving or hot engine parts. Failure to observe this *WARNING* can result in severe personal injury or death.	
38	During	ENGINE ASSEMBLY	Check for loose, damaged, or missing parts	
39	During	FUEL SYSTEM	Inspect for leaks, damaged, loose, or missing parts.	Any fuel leaks, damaged or loose parts.
40	During	LUBRICATION SYSTEM	Inspect for leaks, damaged, loose, or missing parts.	Class III leaks, and damaged, or loose parts.
41	During	COOLING FAN	Listen for unusual noise in fan area.	
			WARNING High voltage is produced when this generator set is in operation. Improper operation could result in severe personal injury or death.	

Table 2-2. Operator Preventive Maintenance Checks and Services

Item No.	Interval	Location Item to Check/Service	Procedure	Not Fully Mission Capable if:
42	During	CONTROLS AND INDICATORS	Observe the following indicators and ensure they are operating properly. COOLANT TEMP. 170-200°F (77-930C) OIL PRESSURE 25-60 psi (172-414 - kPa) FREQUENCY 60 Hz VOLTAGE 120-240 VAC	Frequency or AC voltmeter inoperative.
43	During	GROUND ROD CABLE AND CONNECTIONS	Inspect ground rod and cable for loose connections, breaks, damage and corrosion.	Cable is missing or damaged.
44	After	HOUSING	a. Check doors, panels, hinges, and clamping catches for damaged, loose, or corroded items. b. Inspect air intake and exhaust grills for debris.	Cannot secure doors.
45	After	IDENTIFICATION PLATES	Check to ensure identification plates are secure.	
46	After	SKID BASE	Inspect skid base for cracks and corrosion.	Skid base is cracked or shows signs of structural damage.

WARNING

The fuels used in this generator set are highly explosive. Do not smoke or use open flame when performing maintenance. Flames and explosion can occur resulting in severe personal injury or death.

47	After	ENGINE ASSEMBLY	Check for loose, damaged, or missing hardware.	
48	After	FUEL SYSTEM	Inspect fuel system for leaks, and damaged, loose, or missing hardware. missing parts.	Any fuel leaks, and damaged, loose, or
49	After	FUEL FILTER/ WATER SEPARATOR	a. Inspect fuel filter/water separator for leaks, cracks, damage, proper mounting, or missing parts. b. Drain water from fuel filter/water separator.	Any fuel leaks.

Table 2-2. Operator Preventive Maintenance Checks and Services

Item No.	Interval	Location Item to Check/Service	Procedure	Not Fully Mission Capable if:
50	After	LUBRICATION SYSTEM	a. Inspect lubrication system for leaks, damaged, loose, or missing parts.	Class III leaks, damaged, loose, or missing parts.
			b. Check oil level.	Oil level is below add level.
			c. Check engine oil for contamination.	Engine oil shows signs of contamination.
			WARNING Cooling system operates at high temperatures. Personal injury or death from burns or scalding can result from contact with high pressure steam and/or liquid.	
51	After	RADIATOR	Check radiator for leaks, damaged, or missing parts.	Class III leaks. Radiator cap missing.
52	After	HOSES	Check hoses for leaks or cracks.	Class III leaks.
53	After	FAN BELT	Inspect belts for cracks, fraying, or looseness.	Broken belt.
54	After	OVER-FLOW BOTTLE	Check over-flow bottle for leaks or missing parts. Check coolant level.	Class III leaks. Coolant level is below cold line.
55	After	CONTROLS AND INDICATORS	Check all controls and indicators for damaged or missing parts.	Controls or indicators damaged or missing.

Table 2-2. Operator Preventive Maintenance Checks and Services

Item No.	Interval	Location Item to Check/Service	Procedure	Not Fully Mission Capable if:
56	After	**TRAILER** SWITCH BOX ASSEMBLY (POWER PLANTS ONLY)	a. Check for loose or missing hardware.	Two or more mounting bolts missing.
			b. Check for damaged indicator lights.	Indicator lights are damaged.
			c. Check hinges and clamping catches.	
			d. Check for loose or damaged switches.	Switches loose or damaged.
			e. Check output terminals and connectors for damaged or missing hardware.	Output terminals or connectors will not properly secure load cables.

Section III. OPERATION UNDER USUAL CONDITIONS

2-3 ASSEMBLY AND PREPARATION FOR USE.

2-3.1. Unpacking the Power Plants/Power Units. Unpacking must be performed by unit level maintenance personnel.

2-3.2 Installation. Before the power plant/power unit is started and operated, it is towed to the worksite and positioned.

2-3.2.1 Positioning Power Plant/Power Unit.

a. Locate the trailer on as level a surface as possible. This is necessary for efficient operation of the generator set(s).

WARNING

Do not disconnect trailer from towing vehicle before brakes are set and front landing leg/support leg are lowered. Failure to observe this *WARNING* could result in severe personal injury or death from trailer tipping or rolling.

b. Using the two handbrake levers, set trailer brakes securely to prevent any movement.

c. Refer to TM 9-2330-202-14&P for uncoupling AN/MJQ-35 or PU-797 trailer from towing vehicle, TM 9-2330-392-14&P for uncoupling AN/MJQ-35A or PU-797A trailer from towing vehicle, and TM 9-2330-213-14&P for uncoupling AN/MJQ-36 trailer from towing vehicle.

d. Adjust front landing leg using elevation crank to level the trailer.

e. Pull out pin (1, figure 2-5) that secures rear leveling-support jack (2) in travel position.

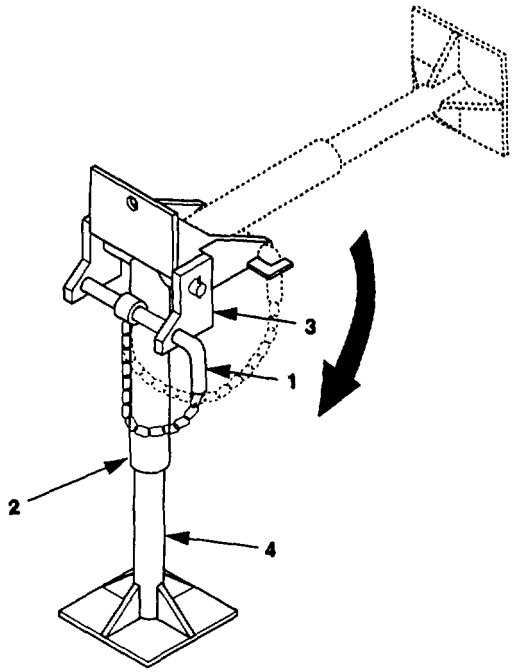

Figure 2-5. Rear Leveling-Support Jack.

f. Pull rear leveling-support jack (2) down. Insert pin (1) in bracket (3) to secure rear leveling-support jack (2) in down position.

g. Turn leg base (4) until it makes firm contact with ground.

2-3.2.2 External Fuel Line Connection. Each generator set has provisions for obtaining fuel from an external source, such as a 5-gallon fuel can or a 55-gallon diesel fuel container. This enables operation for long intervals without frequent refilling of the fiel tank. To use an external fiel source

WARNING

The fuel in this generator set is highly explosive. Do not smoke or use open flame when performing maintenance. Flames and explosion could result in severe personal injury or death.

a. Place the external fiel source (2, figure 2-6) several feet, but no more than 25 feet, away from the generator set.

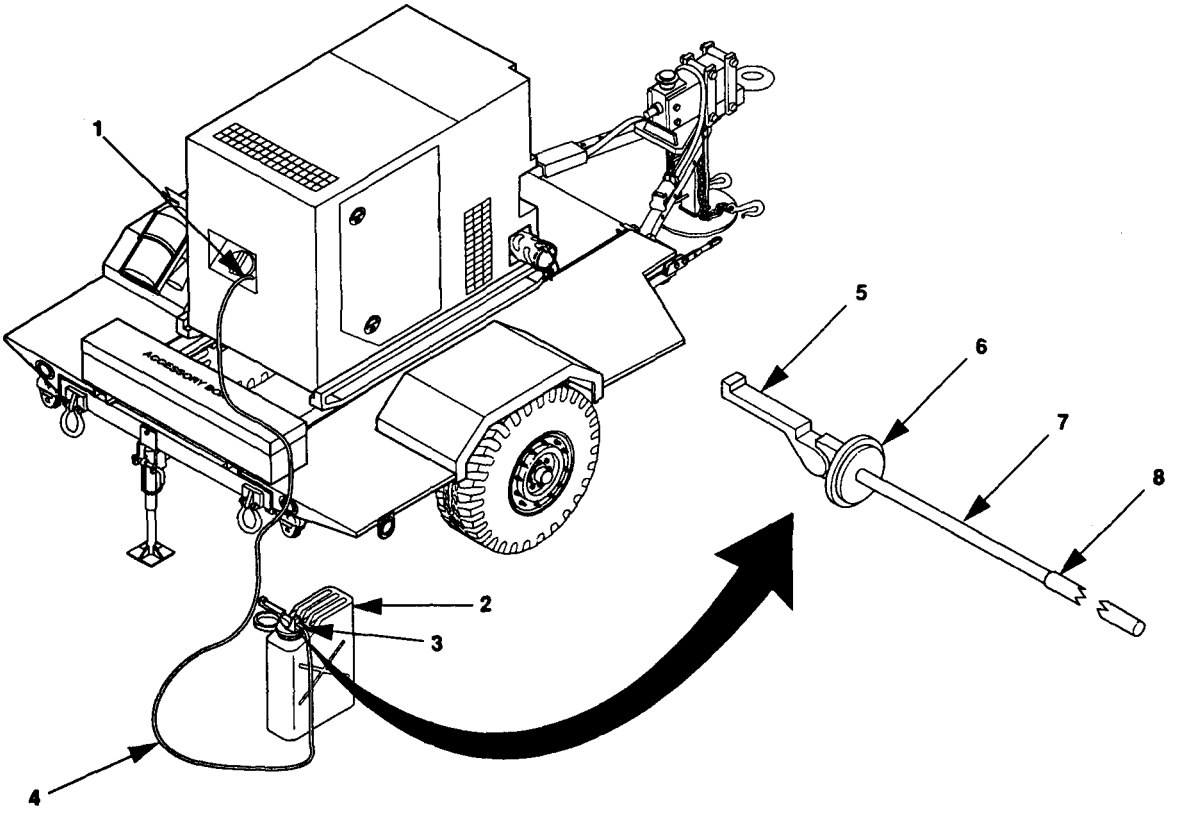

Figure 2-6. *Auxiliary fuel (Typical).*

b. Remove the container adapter (3) from the accessory storage box. If disassembled, remove all components. The components are the assembled clamp and head (5 and 6), a fuel pickup tube (7), and an extension pipe (8). The extension pipe is not needed if the external fuel source is a 5-gallon fuel can (2).

NOTE

Make sure that all components are clean.

c. Thread the fuel pickup tube (7) into the head (6). If the external fuel source is a 55-gallon container, thread the extension pipe (8) onto the fiel pickup tube (7).

d. Remove the auxiliary fuel hose (4) from its storage location. It is stored in a compartment below the generatar set control panel, behind the bottom-right access door.

e. Thread one end of the auxiliary fuel hose (4) onto the fitting on the container adapter (3). Tighten the connection.

f. Connect the free end of the auxiliary fuel hose (4) to the generator set external fuel supply connection (l). The connection is located beside the generator set fuel tank filler neck. Tighten the connection.

WARNING

The fuels in this generator set are highly explosive. Do not smoke or use open flames when performing maintenance. Flames and explosion could result in severe personal injury or death.

g. Insert the container adapter (3) into the external fuel source (2). Secure the container adapter by pressing down on the handle of the clamp (5).

WARNING

Never attempt to start the generator set if it is not properly grounded. Failure to observe this warning could result in severe personal injury or death by electrocution.

2-3.3 Grounding of Generator Set. Ground the equipment in accordance with Army Field Manual FM 20-31. Typical ground rod installations are shown in figure 2-8. If a ground rod is used, install and connect it as follows:

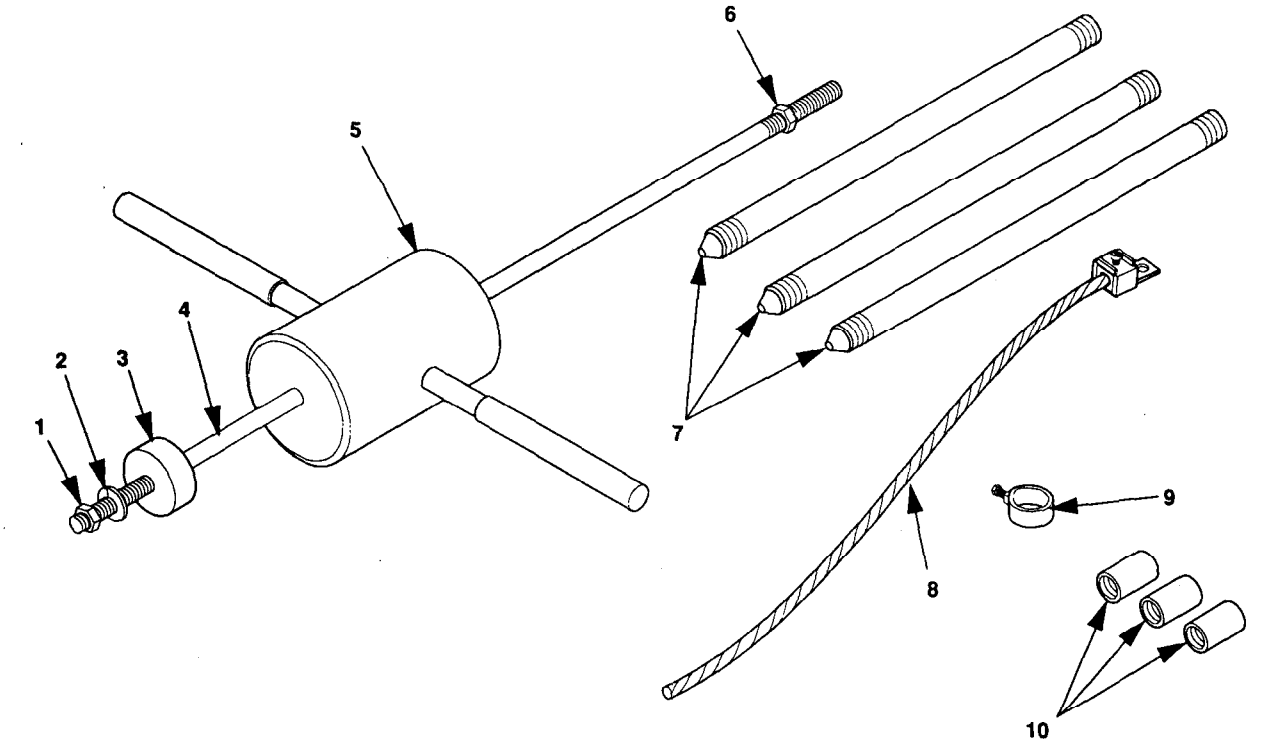

Figure 2-7. Ground Rod and Slide Hammer.

a. Remove ground rod, grounding strap, and slide hammer (figure 2-7) from accessory box. Perform assembly steps (1) through (4).

WARNING

Impact disk must be tightened to end of threads on rod. Also, lock washer and nut must be tightened firmly against impact disk. Failure to observe this warning could result in severe personal injury ador death and damage to the equipment.

NOTE

The terminal lug supplied with the ground rod is too small. Use additional ground strap provided with power unit.

(1) Install impact disk (3) on rod (4). Tighten impact disk to end of threads on rod (4).

(2) Install lock washer (2) and nut (l). Tighten nut (1) and lock washer (2) securely against impact disk (3).

(3) If installed, remove nut (6).

(4) Position hammer (5) on rod (4). Install nut (6) and tighten to end of threads on rod (4).

b. Connect ground rod coupling (10) to ground rod (7) and screw slide hammer into coupling (10). Make sure that slide hammer rod (4) seats on ground rod (7).

c. Drive ground rod into ground until coupling is just above surface.

d. Remove slide hammer assembly and install another section of ground rod (7).

e. Install another coupling (10) and the slide hammer assembly. Drive ground rod down until new coupling is just above ground surface.

f. Repeat steps d and e until ground rod has been driven eight feet or deeper, providing an effective ground.

g. Connect clamp (9) and ground cable (8) to ground rod (7) and tighten clamp screw.

h. Connect ground cable (8) to trailer as follows.

NOTE

Ground terminal on high mobility trailer is different than one used on other trailers.

(1) If the high mobility trailer (AN/MJQ-35A or PU-797A) is being used, perform steps (5) and (6). Otherwise perform steps (2) through (4).

(2) Remove and retain wing nut (1, figure 2-8) and flat washer (2) from trailer ground stud (4) and install ground cable terminal lug (3) to ground stud (4).

(3) Install flat washer (2) on ground stud (4).

(4) Install wing nut (1) on the ground stud (4) and tighten.

(5) Loosen nut (5) on high mobility trailer ground terminal (6).

(6) Insert wire (7) through slot of ground terminal (6) and tighten nut (5).

i. Disassemble slide hammer as follows: (1) Remove nut (6, figure 2-7) from end of rod (4) and retain.

(2) Remove hammer (5) from rod (4) and thread nut (6) on end of rod to prevent loss.

(3) Store hammer (5) and rod (4) with assembled parts in accessory box.

2-3.4 Connecting Load.

2-3.4.1 Power Plant. Load cables and instructions for connecting them are normally furnished with the equipment that is to be supplied with electric power. The load may be connected to the switch box (1, figure 2-9) by either of two arrangements. One way is to connect a load cable to the switch box output connector (7). The other way is to connect load cables to the switch box load terminals (3). Before connecting the load, determine voltage requirements of the system or equipment that is to receive electric power.

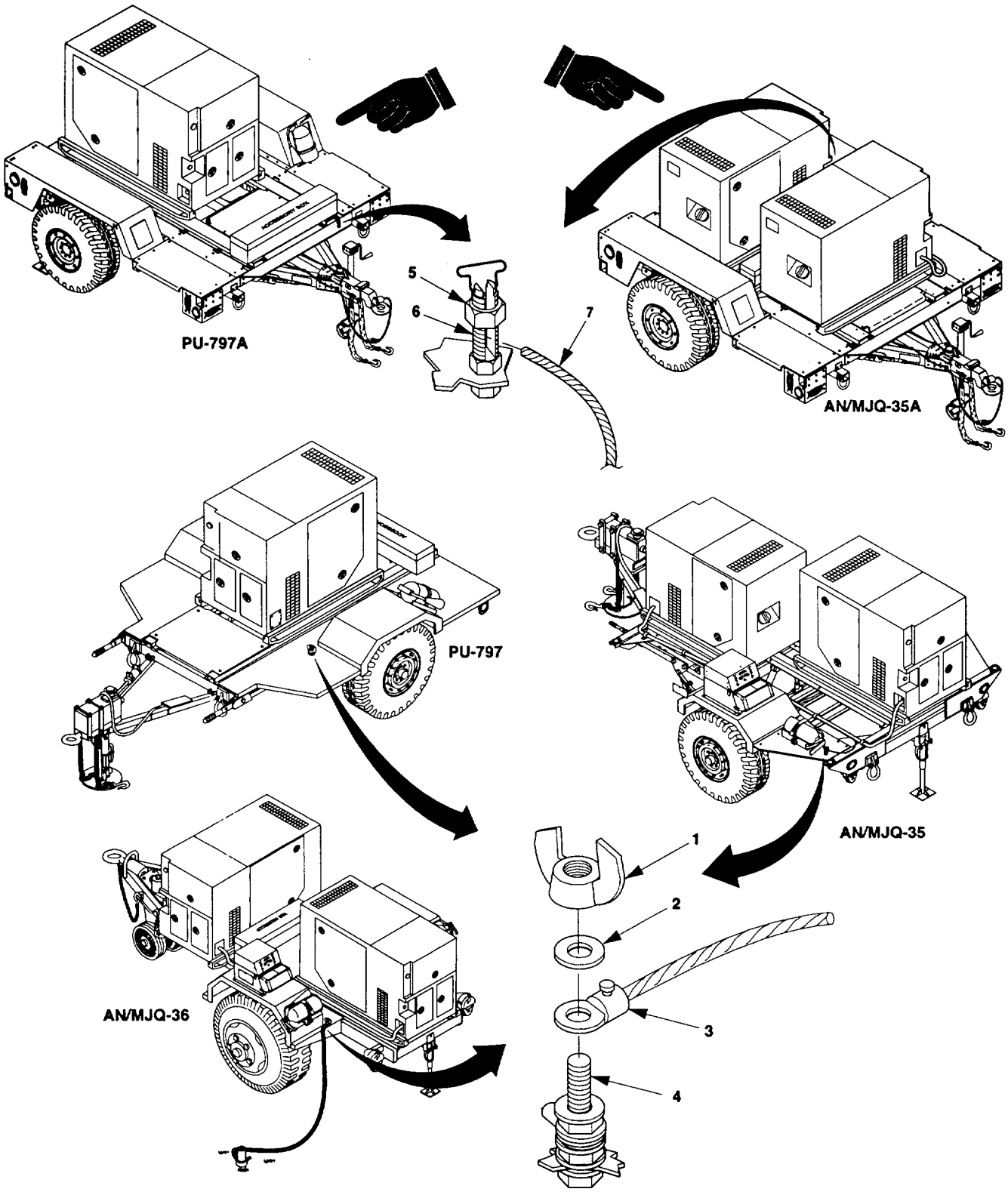

Figure 2-8. Power Plant and Power Unit Ground Connections.

WARNING

Make sure generator sets are shut down before connecting load cables. Failure to observe this *WARNING* can cause severe personal injury or death.

2-3.4.1.1 Connection to Output Connector.

a. Remove cap (6, figure 2-9) from output connector (7).

b. Connect load cable to output connector (7).

WARNING

Make sure generator sets are shut down before connecting load cables. Failure to observe this *WARNING* can cause severe personal injury or death.

2-3.4.1.2 Connection to Switch Box Load Terminals.

a. Release both clamping catches (4, figure 2-9) and raise load terminal cover (2).

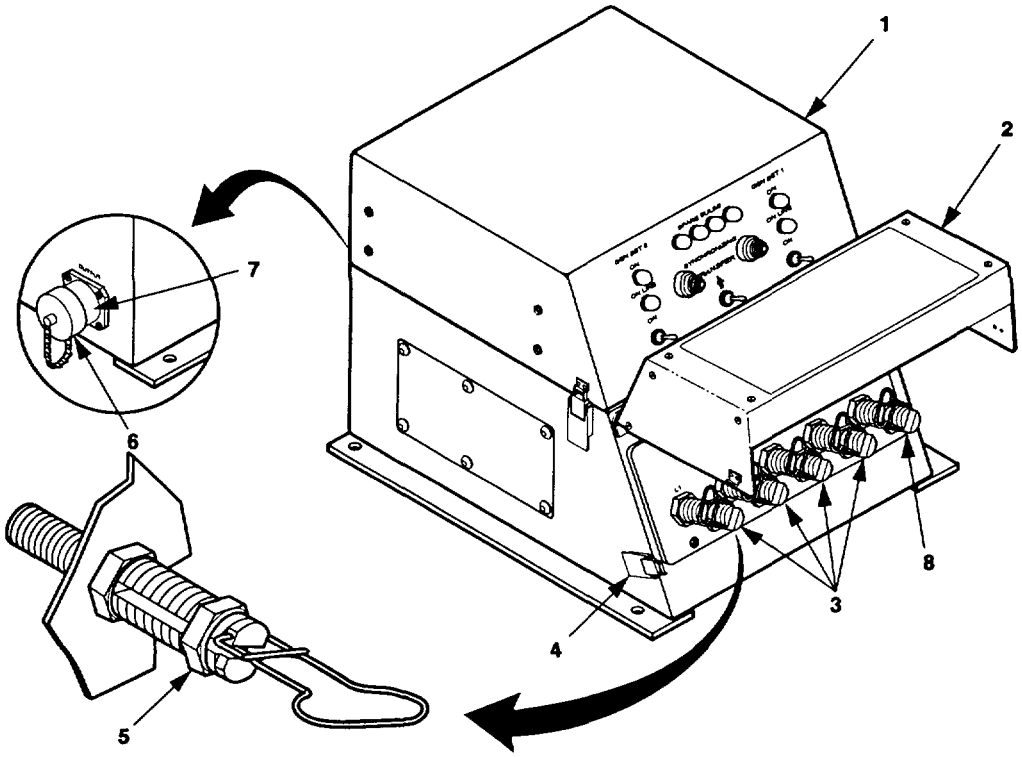

Figure 2-9. Switch Box Load Cable Connections.

b. Select required output terminals from table 2-3.

2-5.3.1 Operating a Single Generator Set

a. Perform the Preventive Maintenance Checks and Services (PMCS) listed as "Before" in table 2-2.

b. Check that both ON/OFF switches (4 and 6, figure 2-10) on switch box are at center position.

c. Check that TRANSFER switch (5) on switch box is at bottom position.

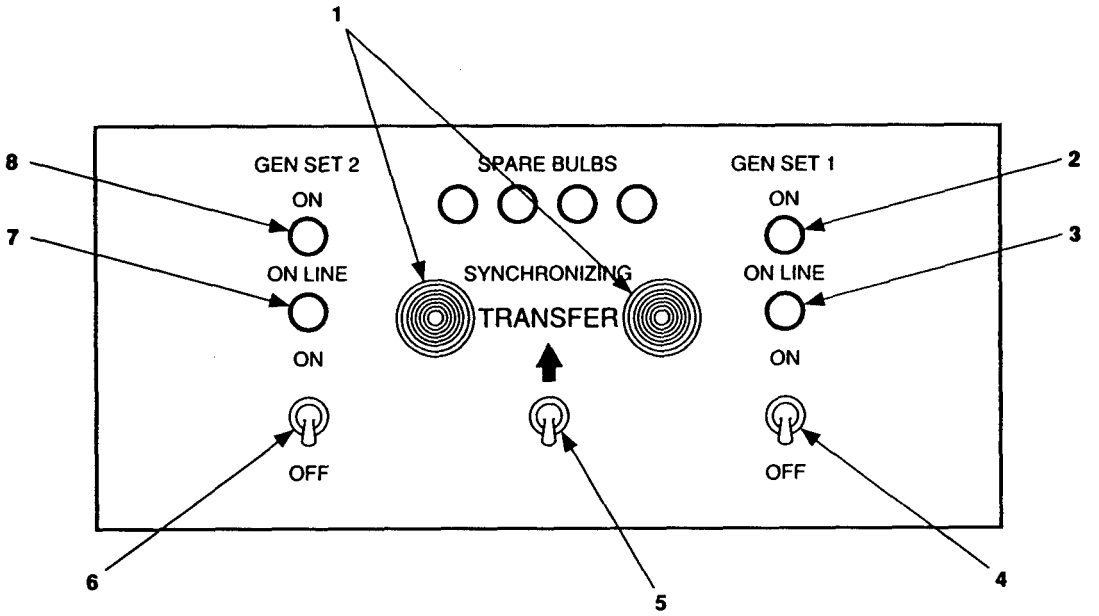

Figure 2-10. ***Power Plant Operation.***

d. Refer to TM 9-6115-641-10 and:

(1) Start one of the generator sets.

(2) Use generator set VOLTAGE adjustable rheostat to adjust voltage to required value.

(3) Using generator set frequency adjust control, adjust frequency to required value.

(4) Set AC CIRCUIT INTERRUPTER switch on the operating generator set to CLOSED position.

e. Check switch box to make sure that GEN SET ON light (8 or 2) is lit for generator set just started.

f. Set switch box ON/OFF switch (6 or 4) below lit GEN SET ON light to ON position.

g. Check that switch box ON light (8 or 2) and ON LINE light (7 or 3) for operating generator set are both lit. The generator set is now supplying power to the connected load.

h. Observe frequency meter and readjust to proper frequency for load if required.

i. Refer to table 2-2 and perform generator set "During" PMCS.

2-5.3.2 Load Transfer.

a. For the generator set that is not operating

(1) Refer to table 2-2 and perform the "Before" PMCS.

(2) Check that switch box ON/OFF switch (6 or 4) is at center position.

(3) Check that switch box TRANSFER switch (5) is at bottom position.

(4) Refer to TM 9-6115-641-10 and:

(a) Start the generator set.

(b) Use generator set VOLTAGE adjustable rheostat to adjust voltage to required value.

(c) Using generator set frequency adjust control, adjust frequency to required value.

(d) Set AC CIRCUIT INTERRUPTER switch to CLOSED position.

(5) Check switch box controls and indicators (figure 2-10) to ensure that:

(a) GEN SET ON light (8 or 2) and ON LINE light (7 or 3) is lit for generator set that has been supplying electric power to the load.

(b) GEN SET ON light (8 or 2) for generator set just started is lit.

(6) Move switch box TRANSFER switch (5) in the direction of the arrow. All SYNCHRONIZING lights (1 and 9) should be going from bright to dark at the same time. If SYNCHRONIZING lights do not begin to function, report problem to next higher level of maintenance.

(7) Refer to TM 9-6115-641-10 and:

(a) Slowly increase frequency of generator set that was just started. Continue until SYNCHRONIZING lights (1 and 9) go from bright to dark together at a rate of one or more times per second.

(b) Slowly decrease frequency of generator set that was just started. Continue until SYNCHRONIZING lights (1 and 9) blink together at a rate of once every three to four seconds.

(8) When SYNCHRONIZING lights (1 and 9) are dark, hold the switch box ON/OFF switch (6 or 4) for the generator set that was just started to ON position until ON light remains on. Release the switch. The ON LINE light for the first generator set that was running should immediately go out.

(9) Check switch box lights, as follows:

(a) The ON LINE light (7 or 3) should be lit for the generator set that was just started.

(b) The ON LINE light (7 or 3) for the other generator set should be off.

(10) If lights fail to go on or off, repeat steps (7), (8), and (9). If lights do not function properly, report the problem to the next higher level of maintenance.

b. The second generator set is now supplying electric power to the connected load. All SYNCHRONIZING lights (1 and 9) should be dark.

c. Refer to TM 9-6115-641-10 and set AC CIRCUIT INTERRUPTER switch for generator set that is now offline to OPEN position.

d. Check that switch box ON/OFF switch (6 or 4) for the offline generator set is at center position.

e. Refer to TM 9-6115-641-10 and:

(1) Shut down generator set that is now off line.

(2) Using generator set VOLTAGE adjustable rheostat, adjust voltage of generator set that is now on line to the desired value.

(3) Using generator set frequency adjust control, adjust frequency of generator set that is now on line to desired value.

f. Refer to table 2-2 and perform "After" PMCS for the generator set that was shut down.

g. For the generator set that is now ON LINE, perform the PMCS listed as "During" in table 2-2.

2-5.3.3 Stopping Generator Set.

a. Set the switch box ON/OFF switch (6 or 4, figure 2-10) for the generator set to be stopped to OFF position.

b. Stop the generator set in accordance with TM 9-6115-641-10.

c. Perform the generator set PMCS listed as "After" in table 2-2.

2-6 IDENTIFICATION AND INFORMATION PLATES.

2-6.1 AN/MJQ-35 Identification/Transportation Data Plate. Refer to figure 2-11. This plate is located on rear of curbside fender.

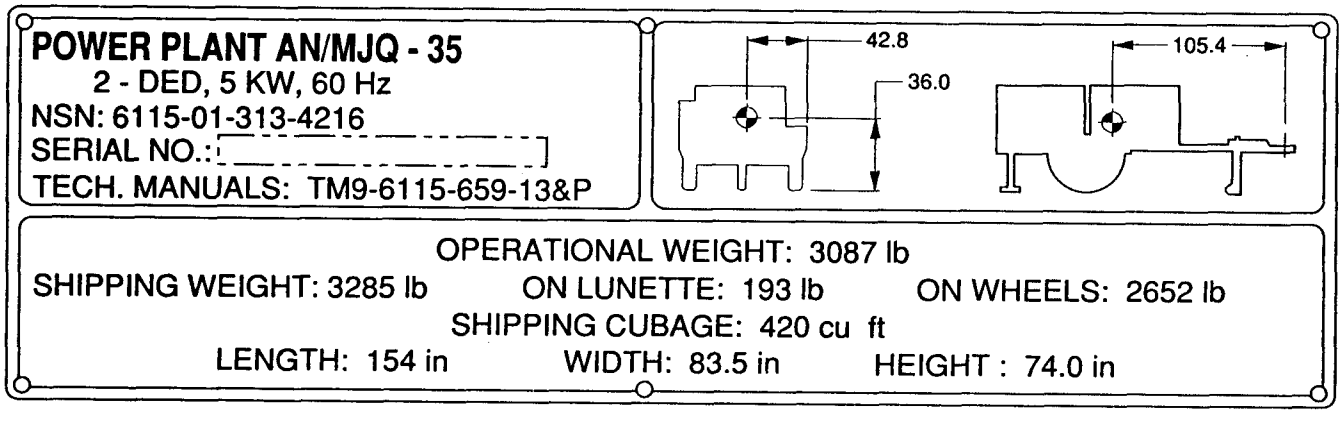

Figure 2-11. AN/MJQ-35 Identitication/Transportation Data Plate.

2-6.2 **AN/MJQ-36 Identification/Transportation Data Plate**. Refer to figure 2-12. This plate is located on front of roadside fender.

2-6.3 **PU-797 Identification/Transportation Data Plate**. Refer to figure 2-13. This plate is located on rear of curbside fender.

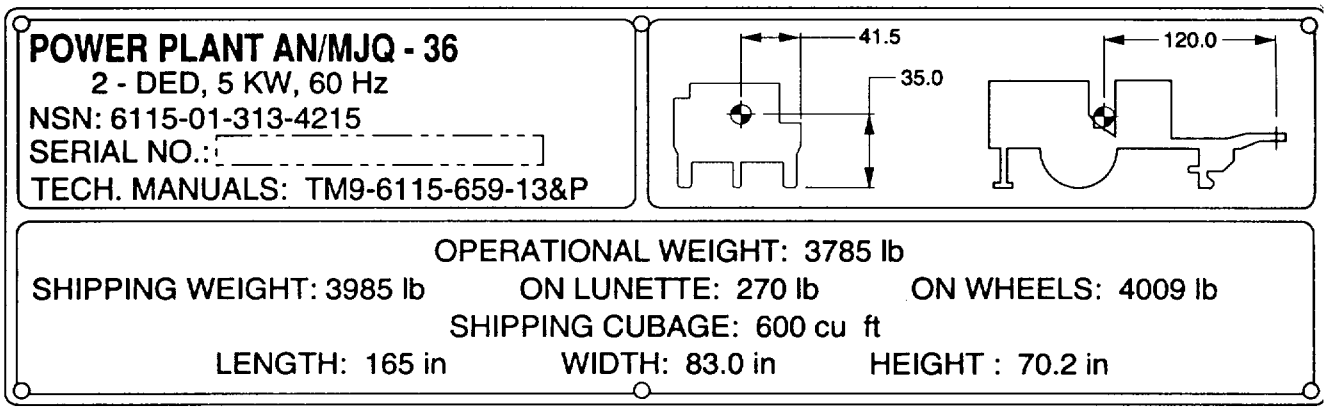

Figure 2-12. AN/MJQ-36 Identification/Transportation Data Plate.

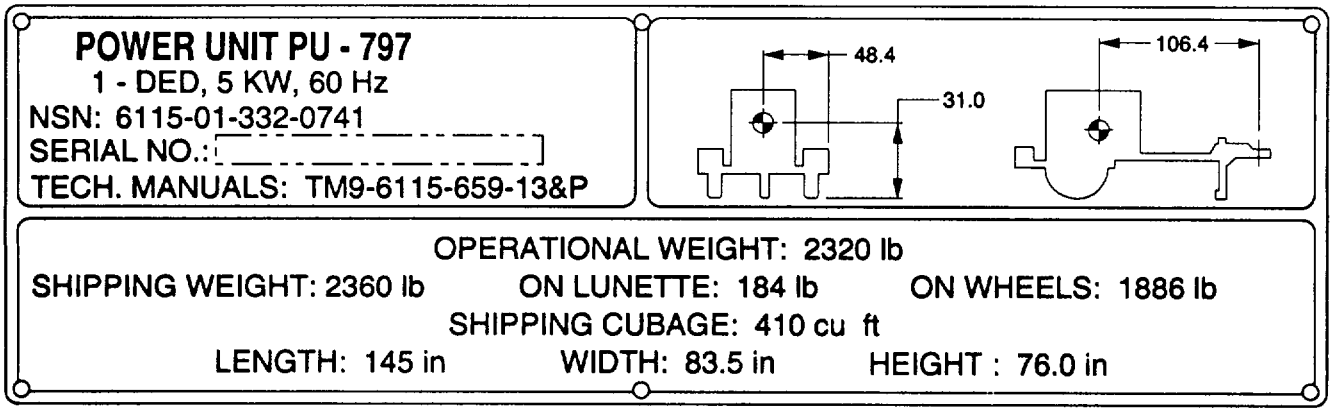

Figure 2-13. PU-797 Identification/Transportation Data Plate.

2-6.4 **AN/MJQ-35A Shipping Data/Identification Plate**. Refer to figure 2-13.1. This plate is located on front of curbside fender.

2-6.5 **PU-797A Shipping Data/Identification Plate**. Refer to figure 2-13.2. This plate is located on front of curbside fender.

2-6.6 **AN/MJQ-35A and PU-797A Trailer Chassis Identification Plate**. Refer to figure 2-13.3. This plate is located on curbside tow bar.

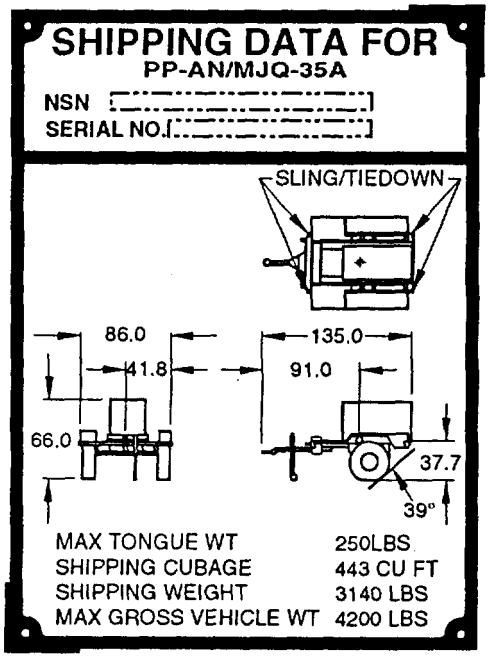

Figure 2-13.1. AN/MJQ-35A Shipping Data/Identification Plate.

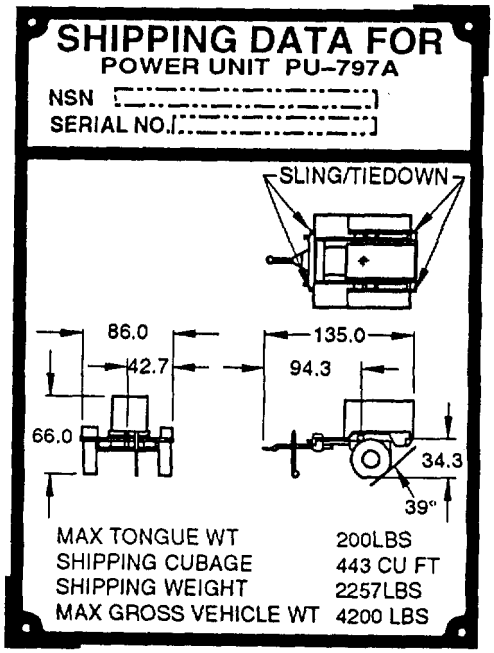

Figure 2-13.2. PU-797A Shipping Data/Identification Plate.

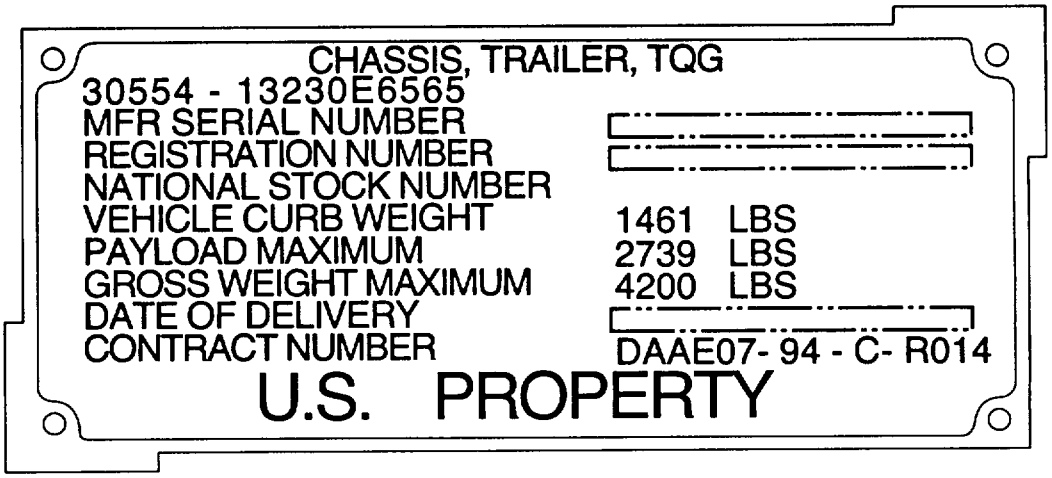

Figure 2-13.3. AN/MJQ-35A and PU-797A Trailer Chassis Identification Plate.

24-.7 Power Plant Instruction Plate. This plate (figure 2-14) covers operating procedures for power plants AN/MJQ-35, AN/MJQ-35A, and AN/MJQ-36. It is located on top of the switch box load terminal cover.

POWER PLANT OPERATING PROCEDURES

BEFORE OPERATION

1. CHECK/SERVICE BOTH GEN SETS BEFORE OPERATING. CONNECT "GND" TERMINAL TO GROUND.

OPERATING PROCEDURES

1. START EITHER GEN SET. ADJUST VOLTAGE AND FREQUENCY. PUT "CKT BKR" SWITCH IN "CLOSED" POSITION.
2. SWITCH BOX "GEN SET" LIGHT SHOULD LIGHT. IF NOT, REFER TO TM.
3. AT SWITCH BOX, PLACE "ON-OFF" SWITCH TO "ON". "ON LINE" LIGHT SHOULD LIGHT. IF NOT, REFER TO TM.

LOAD TRANSFER PROCEDURES, ONE SET OPERATING AS ABOVE.

1. START SECOND SET, ADJUST VOLTAGE AND FREQUENCY TO MATCH OPERATING SET.
2. ON SECOND SET, PLACE "CKT BKR" SWITCH IN THE "CLOSED" POSITION.
3. AT SWITCH BOX, "GEN SET" LIGHT FOR SECOND SET SHOULD LIGHT. IF NOT REFER TO TM.
4. AT SWITCH BOX, PLACE "TRANSFER" SWITCH TO "TRANSFER". BOTH "SYNCHRONIZING" LIGHTS SHOULD BE GOING FROM BRIGHT TO DARK TOGETHER.
5. ON SECOND SET, INCREASE FREQUENCY UNTIL "SYNCHRONIZING" LIGHTS BLINK TOGETHER ONE OR MORE TIMES PER SECOND. THEN DECREASE FREQUENCY UNTIL LIGHTS BLINK TOGETHER ONCE EVERY 3-4 SECONDS.
6. AT SWITCH BOX, WHEN BOTH LIGHTS ARE DARK, PLACE "ON-OFF" SWITCH FOR SECOND SET TO "ON".
7. "ON LINE" LIGHT FOR SECOND SET SHOULD LIGHT, "ON-LINE" LIGHT FOR OTHER SET SHOULD GO OFF. (SECOND SET IS NOW SUPPLYING POWER AND "SYNCHRONIZING" LIGHTS SHOULD BE DARK).
8. AT FIRST SET, PLACE "CKT BKR" SWITCH TO THE "OPEN" POSITION AND SHUT THE SET DOWN.

Figure 2-14. Power Plant Instruction Plate.

2-7 PREPARATION FOR MOVEMENT.

2-7.1 Shut Down Power Plant/Power Unit. If power plant/power unit is operating, stop generator set as follows:

2-7.1.1 Power Plant. Refer to paragraph 2-5.3.3.

2-7.1.2 Power Unit.

a. Stop the generator set in accordance with TM 9-6115-641-10.

b. Perform the generator set PMCS listed as "After" in table 2-2.

2-7.2 Disconnect Load Cables.

WARNING

Make sure generator sets are shut down before connecting load cables.
Failure to observe this warning can cause severe personal injury or death.

a. For Power Unit configuration, refer to TM 9-6115-641-10 and disconnect load cables.

b. For Power Plant configuration where load cable is comected to switch box output connector, perform the following

(1) Disconnect load cable from switch box output connector (6, figure 2-9).

(2) Install cap (5) on output connector (6).

(3) Store load cable with equipment that was being supplied with electric power.

c. For Power Plant configuration where load cables are connected to switch box load terminals, perform the following

(1) Release both clamping catches (4) and raise load terminal cover (2).

(2) Using load terminal box wrench, loosen terminal nuts (l).

(3) Disconnect load cables from switch box load terminals (3).

(4) Store load cables with equipment that was being supplied with electric power.

2-7.3 Retrieve Ground Cable and Rod.

a. Remove wing nut (1, figure 2-8) and flat washer (2). Remove ground cable (b) from ground stud (4). Reinstall flat washer and wing nut on ground stud.

b. Loosen clamp (9, figure 2-7) and remove ground cable (8) from clamp.

c. Store ground cable in accessory box.

d. Remove slide hammer components from accessory box and assemble as follows:

(1) If installed, remove nut (6, figure 2-7) from rod (4).

(2) Place hammer (5) on rod (4).

(3) Install nut (6) on rod (4) and tighten to end of threads.

WARNING

Impact disk must be tightened to end of threads on rod. Also, lock washer and nut must be firmly tightened against impact disk. Failure to observe this warning could result in severe personal injury or death and damage to the equipment.

(4) Check that impact disk (3) is tightened to end of threads on rod (4). Tighten as needed.

(5) Tighten nut (1) and lock washer (2) securely against impact disk (3).

e. Remove ground rod as follows:

CAUTION

Slide hammer rod and ground rod must make firm contact inside ground rod coupler. If not in firm contact, ground rod, coupler and slide hammer could be damaged.

(1) Refer to figure 2-15 and position slide hammer above ground rod coupling (3). Invert slide hammer so that end having impact disk (1) is up. Connect slide hammer rod (2) to ground rod coupling (3). Tighten so that end of rod (2) makes firm contact with end of ground rod section (4) inside coupling (3).

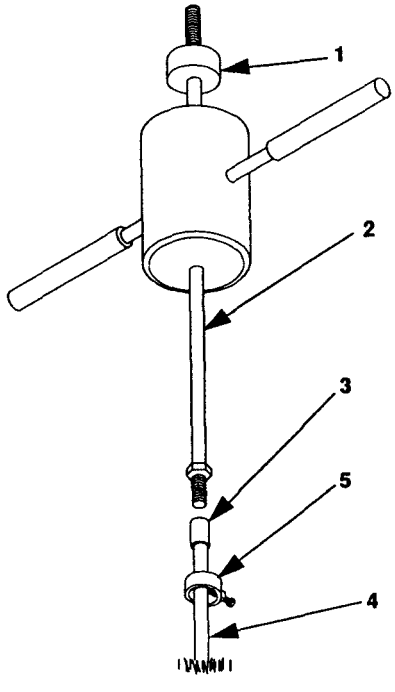

Figure 2-15. Remove Ground Rod.

(2) Use slide hammer to pull ground rod section (4) out of ground. Pull until second coupling (3) is exposed.

(3) Disconnect slide hammer from top coupling (3).

(4) Disconnect top ground rod section (4) from bottom coupling (3).

(5) Remove clamp (5) from ground rod (4). Store clamp in accessory box.

(6) Connect slide hammer rod (2) to coupling (3) on ground rod section (4) still in ground.

(7) Use slide hammer to pull second ground rod section (4) out of ground. Pull ground rod section (4) until third coupling (3) is exposed.

(8) Repeat steps (3) through (5) for third ground rod section (4).

(9) Use slide hammer to pull remaining ground rod section (4) out of ground.

(10) Disconnect slide hammer rod (2) from ground rod coupling (3).

(11) Remove couplings (3) from ground rod sections (4).

f. Clean the couplings (3) and ground rod sections (4). Store cleaned items in accessory box.

g. Partially disassemble slide hammer as follows:

(1) Remove nut (6, figure 2-7).

(2) Remove hammer (5).

(3) Loosely install nut (6).

h. Return slide hammer to its storage location in accessory box.

2-7.4 Retrieve Fire Extinguisher(s). Retrieve fire extinguisher(s) and stow in bracket(s) on trailer,

2-7.6 Disconnect External Fuel Source. Disconnect auxiliary fuel hose as follows:

a. Disconnect the auxiliary fuel hose (4, figure 2-16) from the generator set external fuel supply connection (1). Elevate the free end of the auxiliary fuel hose to drain fuel back into the external fuel source (2). Place free end of auxiliary fuel hose on a clean surface.

b. Disconnect auxiliary fuel hose (4) from fitting on container adapter (3).

c. Store auxiliary fuel hose in the generator set storage compartment below the generator set control panel, behind the bottom-right access door.

d. Release the container adapter from the external fuel source by lifting the handle of the clamp (5). Remove the container adapter from the external fuel source. Close the external fuel source and load onto appropriate transportation.

e. Store the container adapter in the accessory box.

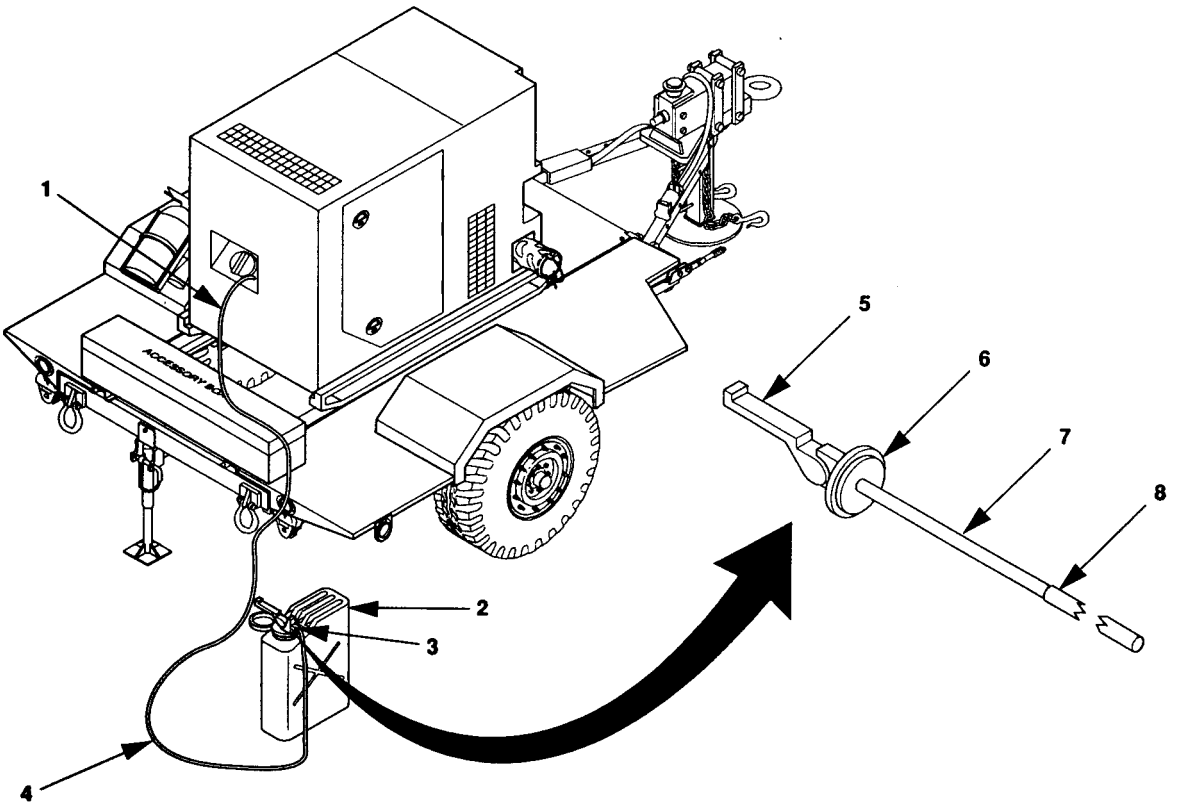

Figure 2-16. Disconnect Auxiliary Fuel (Typical).

Section IV. OPERATION UNDER UNUSUAL CONDITIONS

2-8 GENERATOR SETS.

Refer to TM 9-6115-641-10.

2-9 TRAILER.

Refer to TM 9-2330-202-14&P for Power Plant AN/MJQ-35 and Power Unit PU-797, TM 9-2330-392-14&P for Power Plant AN/MJQ-35A and Power Unit PU-797A, and TM 9-2330-213-14&P for Power Plant AN/MJQ-36.

CHAPTER 3

OPERATOR MAINTENANCE

Subject Index Page

Section I. OPERATOR LUBRICATION

3-1 LUBRICATION.

Lubrication instructions for the generator set and engine are contained in LO 9-6115-641-12. Lubrication instructions for the trailers are contained in TM 9-2330-202-14&P for Power Plant AN/MJQ-35 and PU-797, TM 9-2330-392-14&P for Power Plant AN/MJQ-35A and PU-797A, and TM 9-2330-213-14&P for Power Plant AN/MJQ-36.

Section II. TROUBLESHOOTING

3-2 TROUBLESHOOTING.

3-2.1 **Generator Set**. Refer to TM 9-6115-641-10.

3-2.2 **Trailer**. Refer to TM 9-2330-202-14&P for Power Plant AN/MJQ-35 and Power Unit PU-797, TM 9-2330-392-14&P for Power Plant AN/MJQ-35A and Power Unit PU-797A, and TM 9-2330-213-14&P for Power Plant AN/MJQ-36.

3-2.3 **Power Plant**. The following symptom index lists faults associated with switch box operation. Figures 3-1, 3-2, and 3-3 provide a go/no-go flowchart of each malfunction. Each malfunction listed includes a reference to the applicable figure that contains a chart that will help you determine probable causes and corrective actions to take. The symptom index cannot list all faults that may occur, nor all tests or inspections and corrective actions. If a malfunction is not listed or cannot be corrected by listed corrective actions, notify next higher level of maintenance.

SYMPTOM INDES

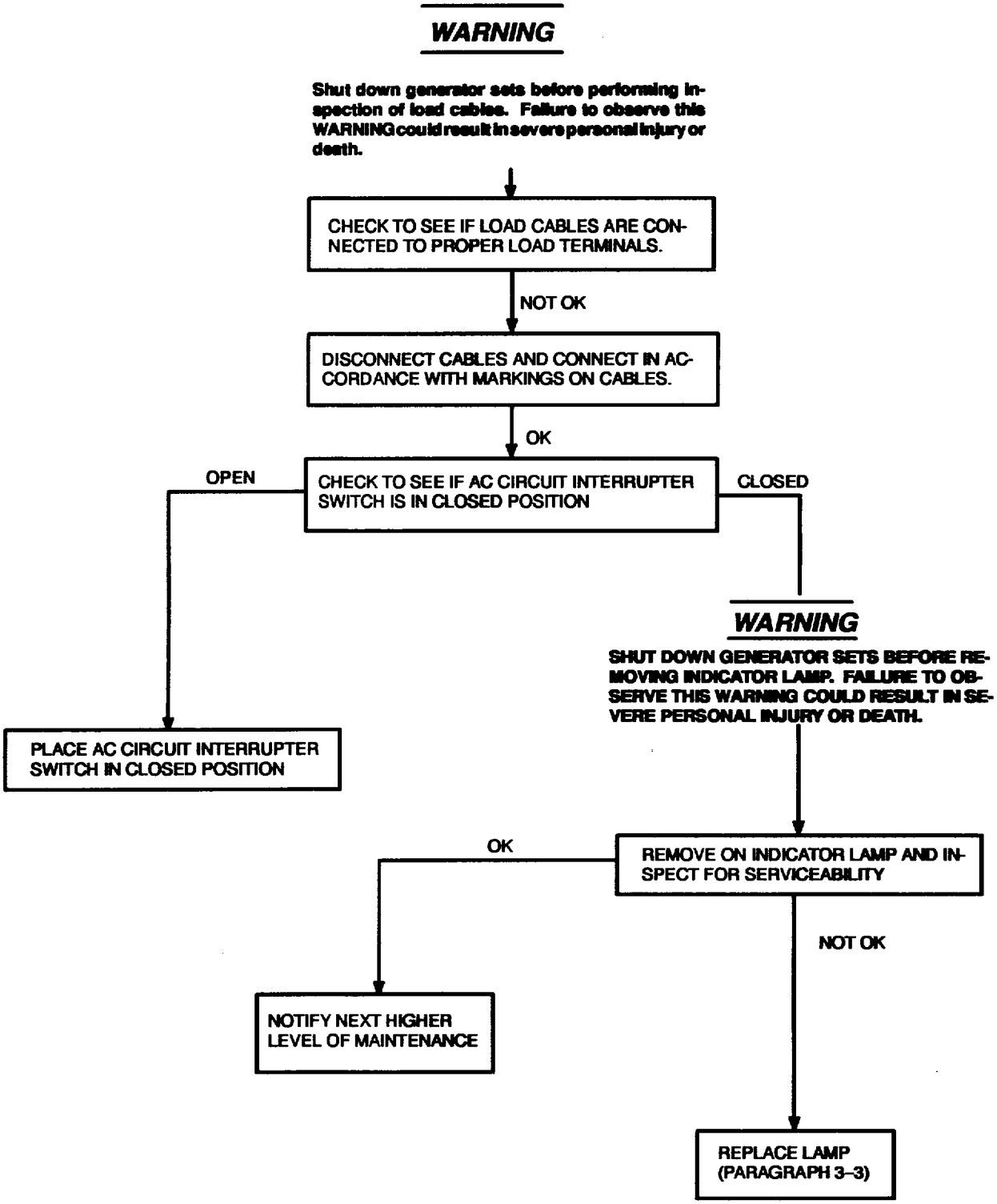

Figure 3-1. ON Indicator Lamp Falls to Light With Generator Set Running.

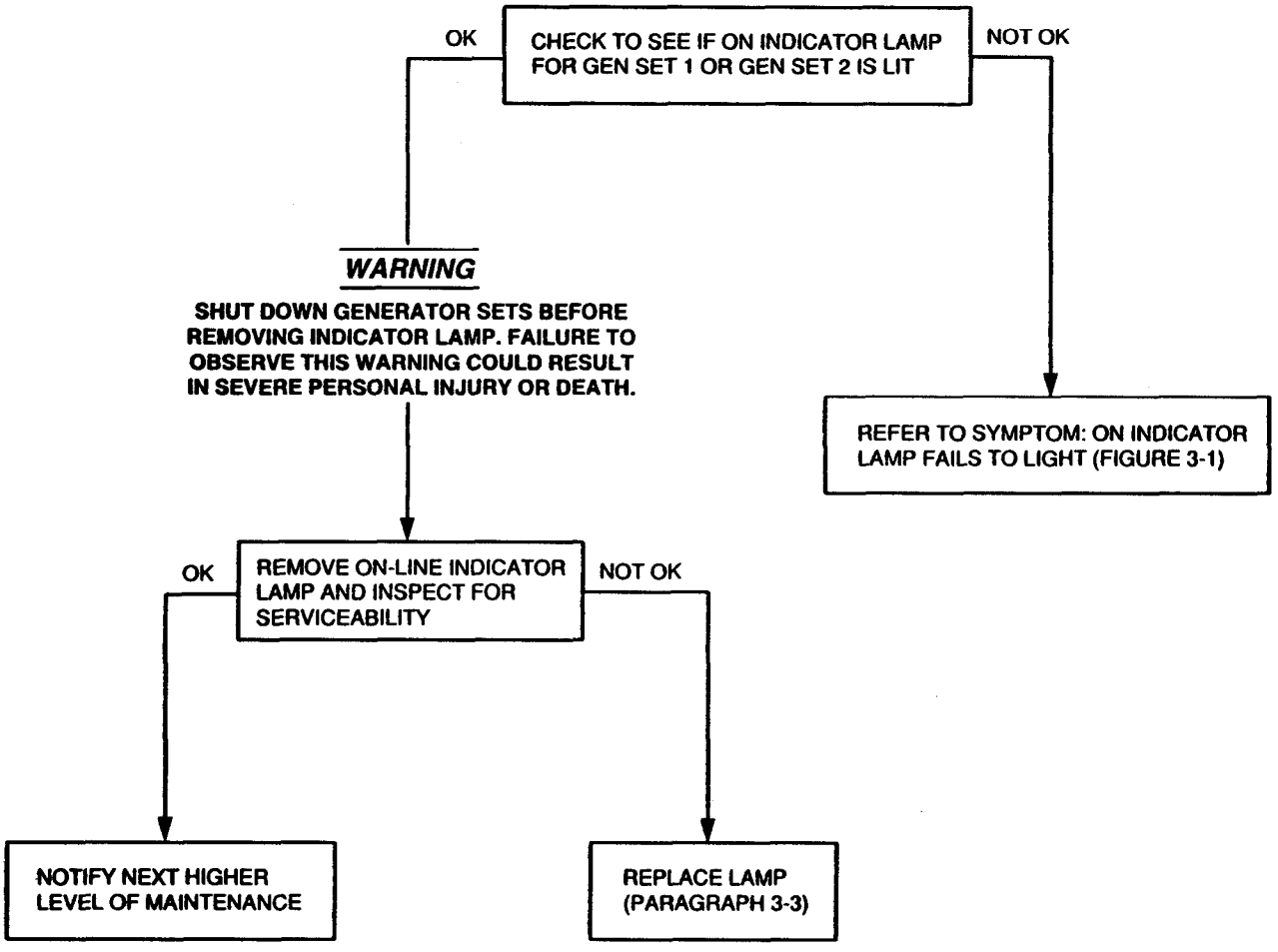

Figure 3-2. ON-LINE Indicator Lamp Fails To fight When ON/OFF Switch Is Placed In ON Position.

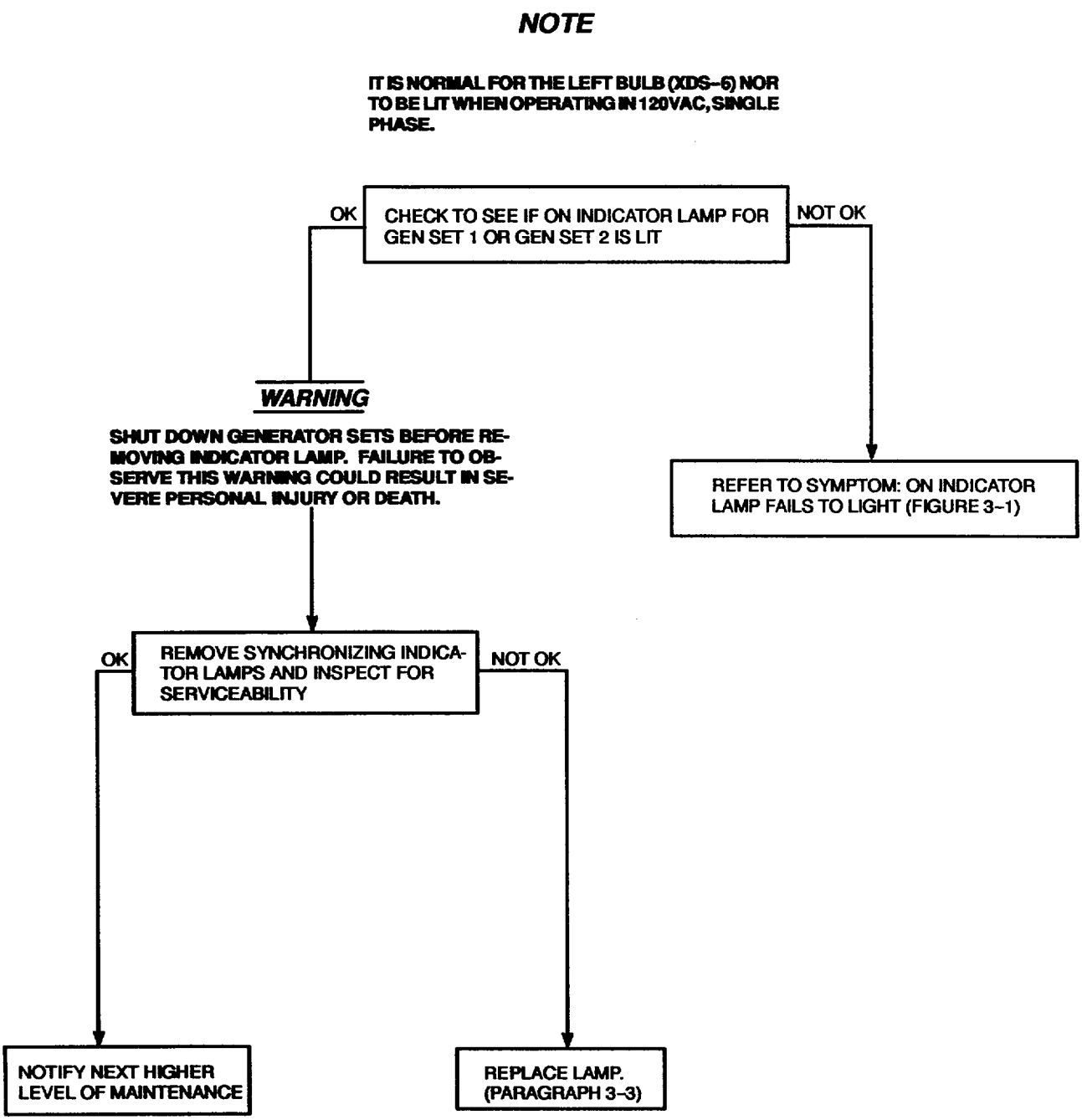

Figure 3-3. SYNCHRONEING Indicator Lamps Fall To Light When TRANSFER Switch Is Operated.

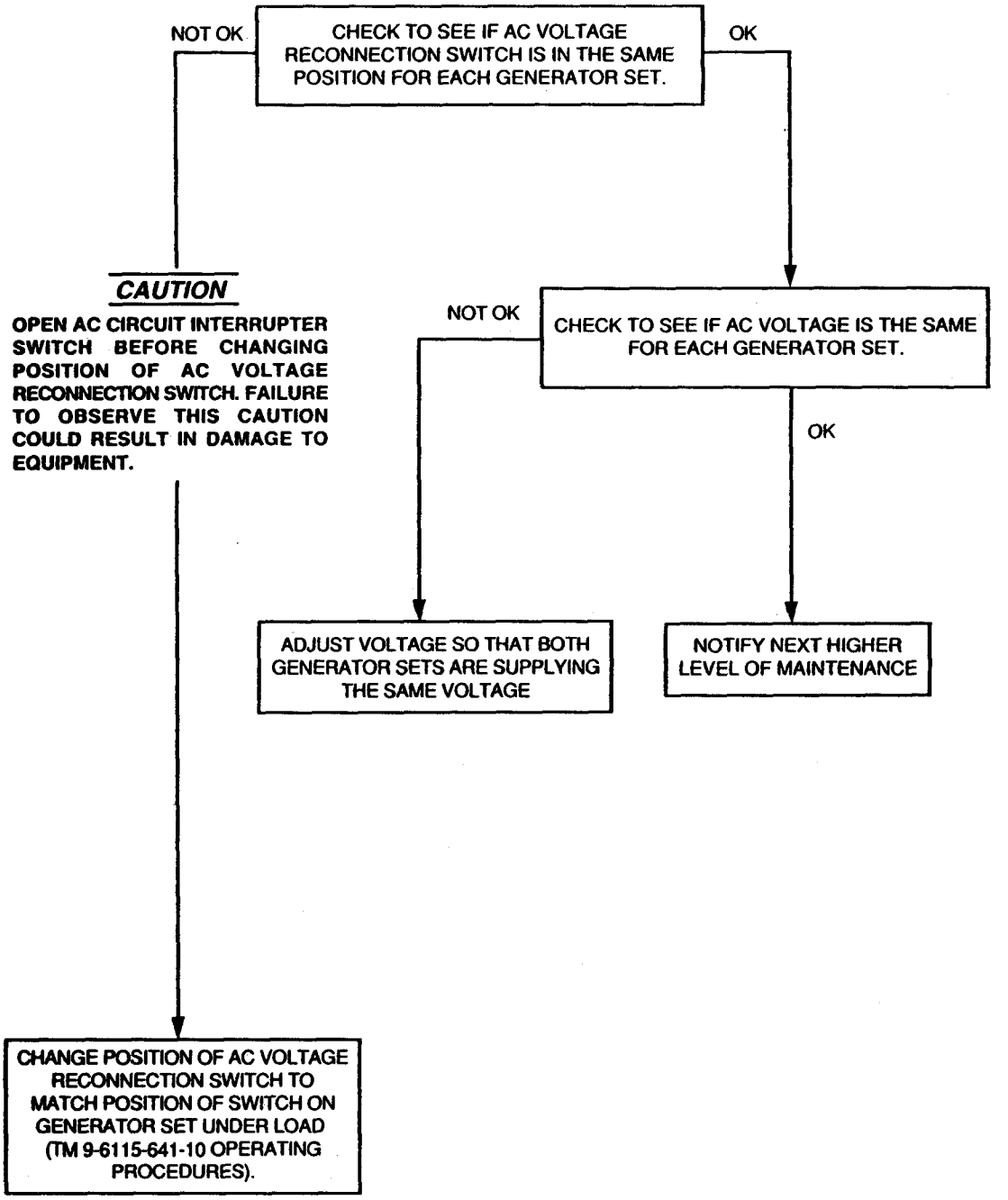

Figure 3-4. With All Indicator Lamps Working Properly, Load Will Not Transfer.

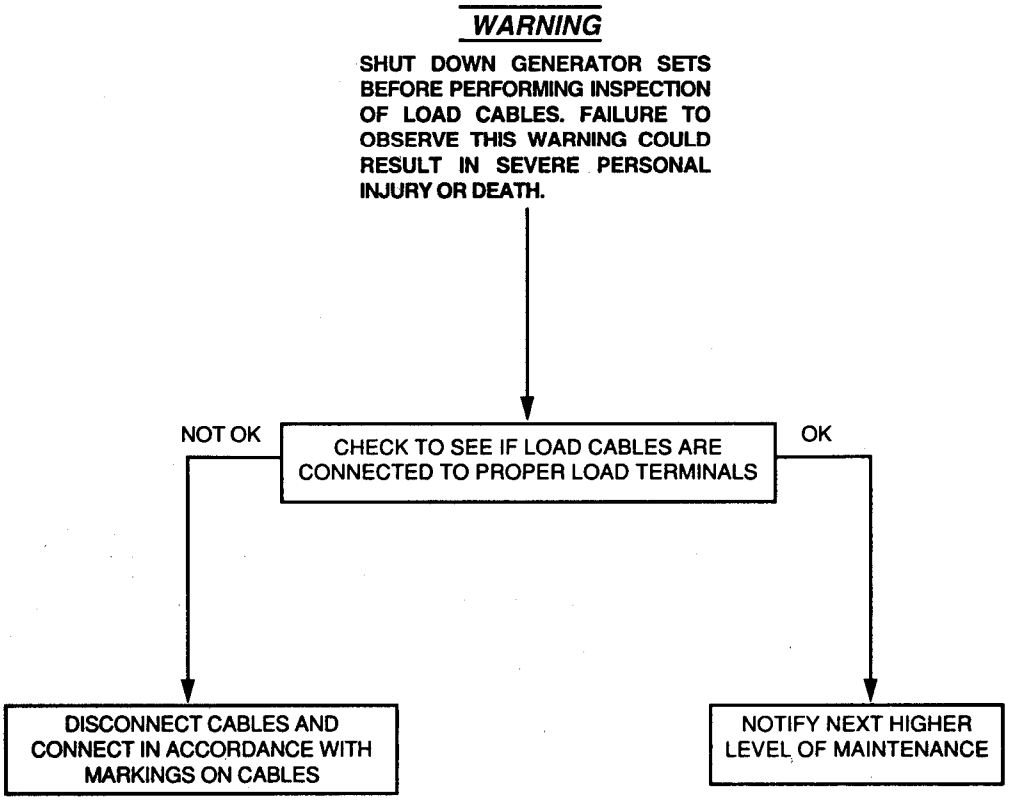

Figure 3-5. Synchronizing Indicator Lamps Fail To Operate In Unison When Transfer Switch Is Operated.

Section III. MAINTENANCE PROCEDURES

3-4 Operator Maintenance.

3-3.1 **Generator Set**. Refer to TM 9-6115-641-10.

3-3.2 **Power Plant**. The maintenance functions that the Maintenance Allocation Chart authorizes the operator to perform are the preventive maintenance checks and services listed in table 2-2 and the replacement of indicator lamps located on the switch box. Perform the following steps to replace ON, ON-LINE, and SYCHRONIZING indicator lamps:

a. Unscrew lens from lamp housing and remove lamp from lens (ON and ON-LINE lamps) or housing (SYNCHRONIZING LAMPS)

b. Install new lamp in housing or lens and screw lens on housing.

3-3.3 **MISSION**. In the event that the right front and rear synchronizing bulbs do not light during the transfer procedure and the mission cannot be terminated to check the bulbs as described in fig. 3-3, the bulbs will have to be removed as follows with one set running:

a. Shut the on coming generator down, to remove power from the internal synchronizing circuitry.

b. Remove the bulbs and replace both with new, if available and proceed with the transfer.

c. If no spare bulbs are available, swap the left front bulb with the burned out bulb and proceed with the transfer.

d. Failure to maintain the rear bulb functional will allow the switch box to transfer load at any time, throwing both generator sets off line.

CHAPTER 4
UNIT MAINTENANCE

Subject Index Page

Section I. REPAIR PARTS; SPECIAL TOOLS; TEST, MEASUREMENT, AND DIAGNOSTIC EQUIPMENT (IMDE); AND SUPPORT EQUIPMENT

4-1 COMMON TOOLS AND EQUIPMENT.

For Authorized common Tools and equipment refer to the Modified Table of Organization and Equipment (MTOE) applicable to your unit.

4-2 SPECIAL TOOLS, TMDE, AND SUPPORT EQUIPMENT.

Refer to generator set TM 9-6115-641-24P and engine TM 9-2815-252-24P.

4-3 REPAIR PARTS.

4-3.1 Generator Set Repair Parts. Refer to generator set TM 9-6115-641-24P and engine TM 9-2815-252-24P.

4-3.2 Trailer Repair Parts. Refer to TM 9-2330-202-14&P for Power Plant AN/MJQ-35 and Power Unit PU-797, TM 9-2330-392-14&P for Power Plant AN/MJQ-35A and Power Unit PU-797A, and TM 9-2330-213-14&P for Power Plant AN/MJQ-36.

4-3.3 Power Plant/Power Unit Repair Parts. Power Plant/Power Unit Repair parts not covered in the generator, engine, or trailer RPSTL are listed and illustrated in Appendix F.

Section II. SERVICE UPON RECEIPT

4-4 SERVICE UPON RECEIPT OF MATERIEL.

4-4.1 Unpacking. The generator sets will have been boxed prior to shipment. Unpack the power plant as follows:

a. Remove and set aside packing list from side of box. Also remove and set aside shortage packing list if there is one.

WARNING

Steel strapping used in packaging of the power plant/power unit has sharp edges. Use care when cutting and handling steel strapping. Failure to observe this warning could result in severe personal injury or death.

b. Using metal cutters, carefully cut metal strapping from boxes covering generator sets. Remove metal strapping. Boxes may also be secured by lag screws at each end of box, near bottom. If so, remove lag screws. Remove boxes.

c. On power plants AN/MJQ-35 and AN/MJQ-36, use metal cutters to carefully cut steel strapping from plywood box covering switch box. Remove plywood box.

d. Switch box cover and switch box load terminal cover may have been secured with tape. If so, remove tape.

WARNING

Steel strapping used in packaging of the power plant/power unit has sharp edges. To avoid injury to persomel, use care when cutting and handling steel strapping.

e. Unpack and secure fire extinguishers in brackets on trailer.

f. If accessory box is secured with strapping, carefully cut and remove strapping. Open accessory box and remove any packaging/cushioning material from accessories.

g. Using the packing list(s) removed in step a., inventory the accessories. Check missing items against shortage packing list (if any). Report any discrepancies to your supervisor.

4-4.2 Checking Unpacked Equipment.

a. Inspect the equipment for damage incurred during shipment. If the equipment has been damaged, report the damage on SF 364, Report of Discrepancy (ROD).

b. Check the equipment against the packing list(s) to see if the equipment is complete. Report all discrepancies in accordance with the instructions in DA Pam 738-750.

c. Check to see whether the equipment has been modified.

4-4.3 Deprocessing Unpacked Equipment
Refer to DA Form 2258, Depreservation Guide for Vehicles and Equipment, packed with the power plant/power unit. The depreservation guide explains what was done to the equipment prior to packaging. It also explains what has to be done before placing the equipment in operation. Perform all depreservation actions required by the depreservation guide.

4-5 INSTALLATION INSTRUCTIONS.

4-5.1 Tools, Test Equipment, and Materials Required for Installation. A general mechanic's tool kit is required for installation of the power plant/power unit. 4-5.2 Assembly of Equipment.

4-5.2.1 Assembly of Power Plants AN/MJQ-35 and AN/MJQ-36. Refer to figure 4-1 and assemble the AN/MJQ-35 and AN/MJQ-36 Power Plants as follows:

NOTE

Refer to sheet 1 of figure 4-1 for installation of power cables on AN/MJQ-35 and sheet 2 of figure 4-1 for installation on AN/MJQ-36.

a. For front generator set, remove stuffing tube locknut (1) from stuffing tube body (7). Slide locknut (1) off power cable leads and ground cable (3).

b. Loosen compression nut (4). Pull in required length of cable to allow installation of leads on terminal board.

c. Insert power cable leads (ends without terminal lugs) (3) through generator output plate (2). Slide stuffing tube locknut (1) over power cable leads.

d. Position stuffing tube body (7) against generator output plate (2). Install and tighten stuffing tube locknut (1).

e. Connect power cable leads and ground cable as follows:

(1) Connect lead marked L1 to generator set load terminal L1.
(2) Connect lead marked L2 to generator set load terminal L2.
(3) Connect lead marked L3 to generator set load terminal L3.
(4) Connect lead marked LO to generator set load terminal LO.
(5) Connect lead marked GND to generator set GND terminal.

f. Position cable inside two clamps (10) and secure clamps (10) to trailer using two screws (8), flat washers (9), and nuts (11).

g. Repeat steps a. through f. for rear generator set.

h. Remove wing nut (12), two flat washers (13), hex nut (14), and flat washer (15).

i. Position ground cable (16) over ground stud (17).

WARNING

Ensure nut (14) is properly secured creating a good ground. Failure to observe this warning could result in severe personal injury or death.

j. Install flat washer (15), hex nut (14), two flat washers (13), and wing nut (12). Tighten nut (12).

k. Unlatch and open switch box load terminal cover (18).

l. Connect ground wire (16) to switch box ground terminal (19).

m. Close and latch switch box load terminal cover (18).

n. Position cable and ground wire inside two clamps (10) and secure clamps to trailer using two screws (8), flat washers (9), and nuts (11).

4-5.2.2 Assembly of Power Plant AN/MJQ-35A. Refer to figure 4-1.1 and assemble the AN/MJQ-35A Power Plant as follows:

a. For front generator set, remove stuffing tube locknut (1) from stuffing tube body (7). Slide locknut (1) off power cable leads and ground cable (3).

b. Loosen compression nut (4). Pull in required length of cable to allow installation of leads on terminal board.

c. Insert power cable leads (ends without terminal lugs) (3) through generator output plate (2). Slide stuffing tube locknut (1) over power cable leads.

d. Position stuffing tube body (7) against generator output plate (2). Install and tighten stuffing tube locknut (1).

e. Connect power cable leads and ground cable as follows:

(1) Connect lead marked L1 to generator set load terminal L1.
(2) Connect lead marked L2 to generator set load terminal L2.
(3) Connect lead marked L3 to generator set load terminal L3.
(4) Connect lead marked LO to generator set load terminal LO.
(5) Connect lead marked GND to generator set GND terminal.

f. Position cable inside two clamps (10) and secure clamps (10) to trailer using two screws (8), flat washers (9), and nuts (11).

g. Repeat steps a. through e. for rear generator set.

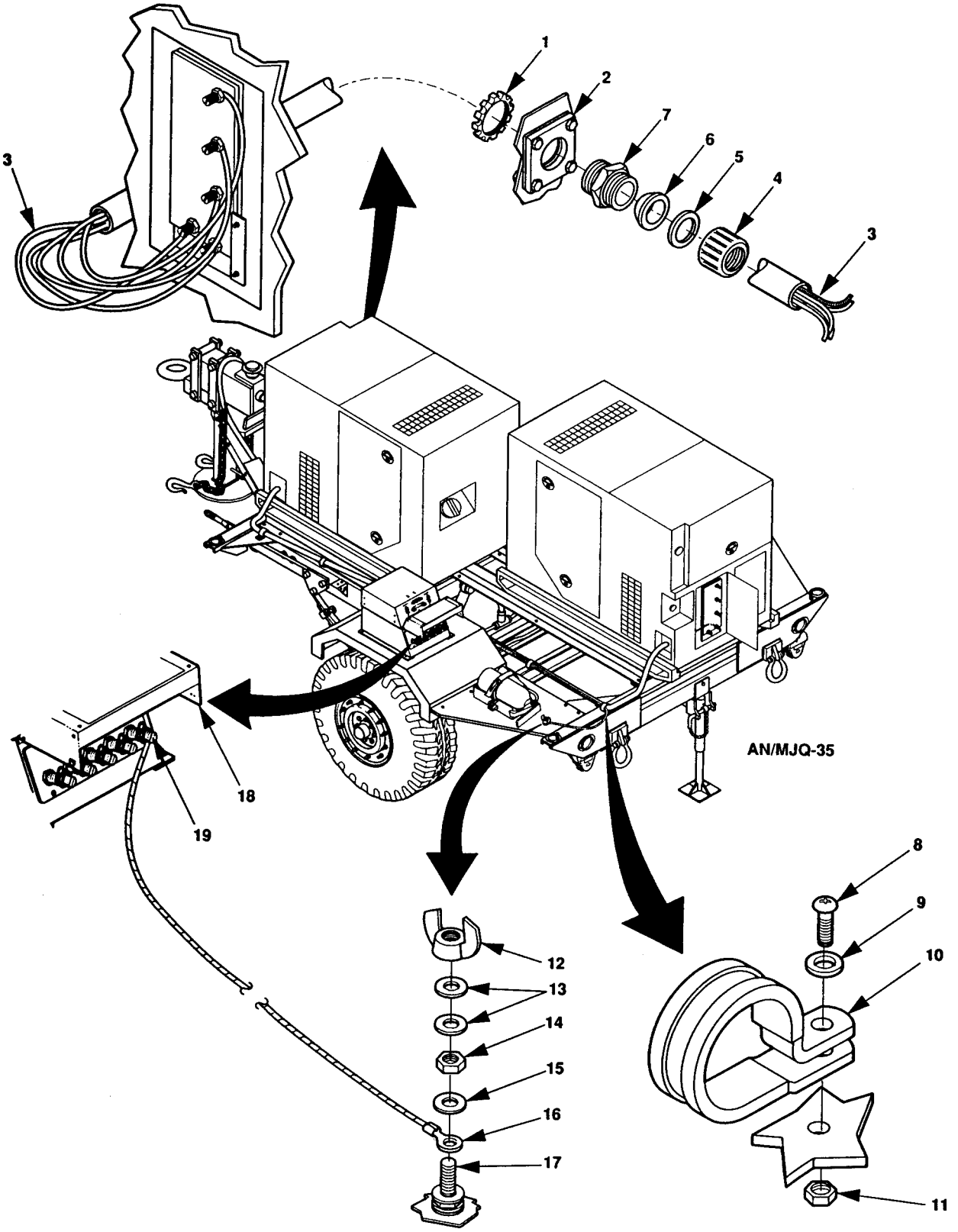

Figure 4-1. Installation of Power Cables (Sheet 1 of 2).

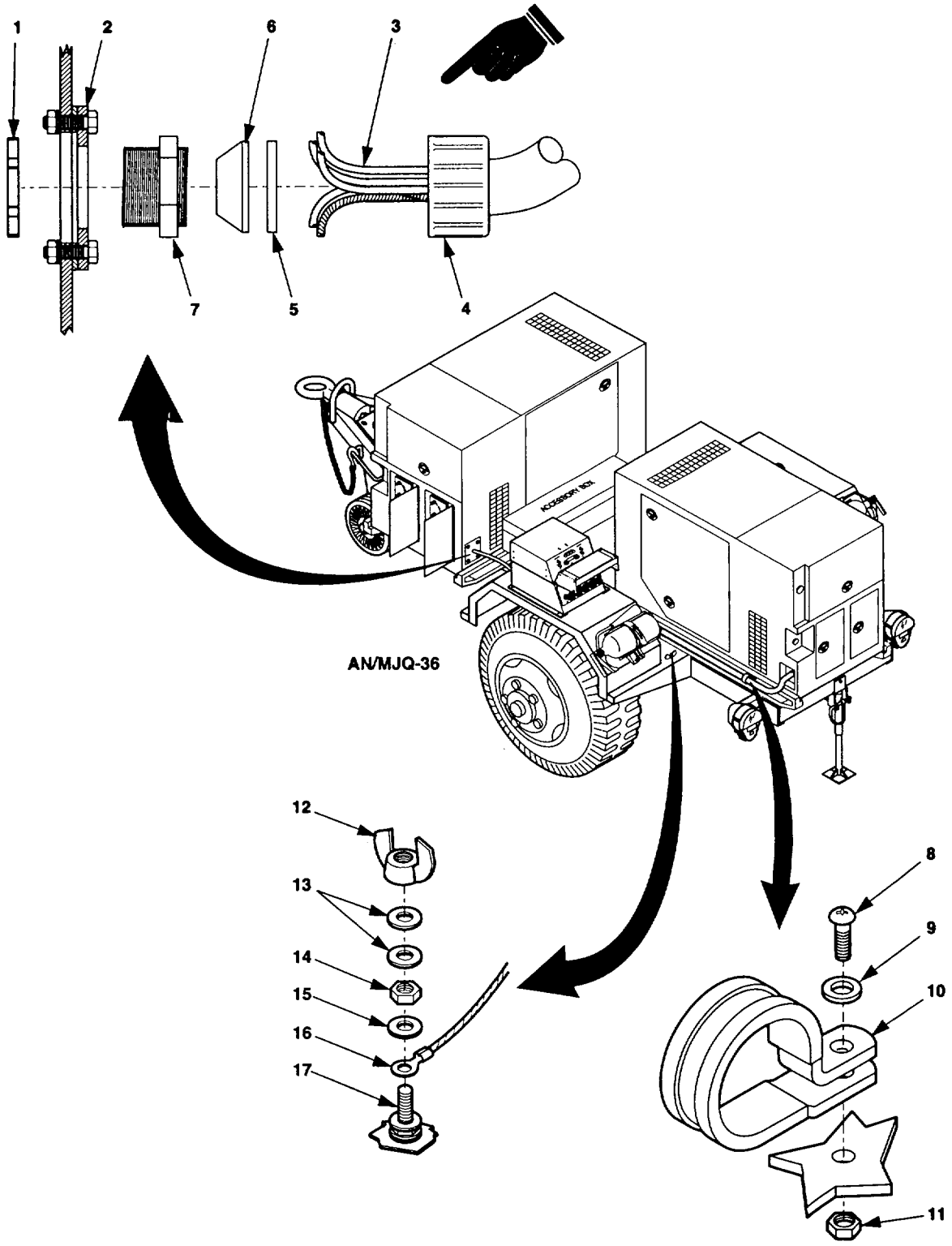

Figure 4-1. Installation of Power Cables (Sheet 2 of 2).

h. Loosen nut (14) on ground terminal (16).

WARNING

Ensure nut (14) is properly secured creating a good ground. Failure to observe this warning could result in severe personal injury or death.

i. Insert wire (15) through slot of ground terminal (16) and tighten nut (14).

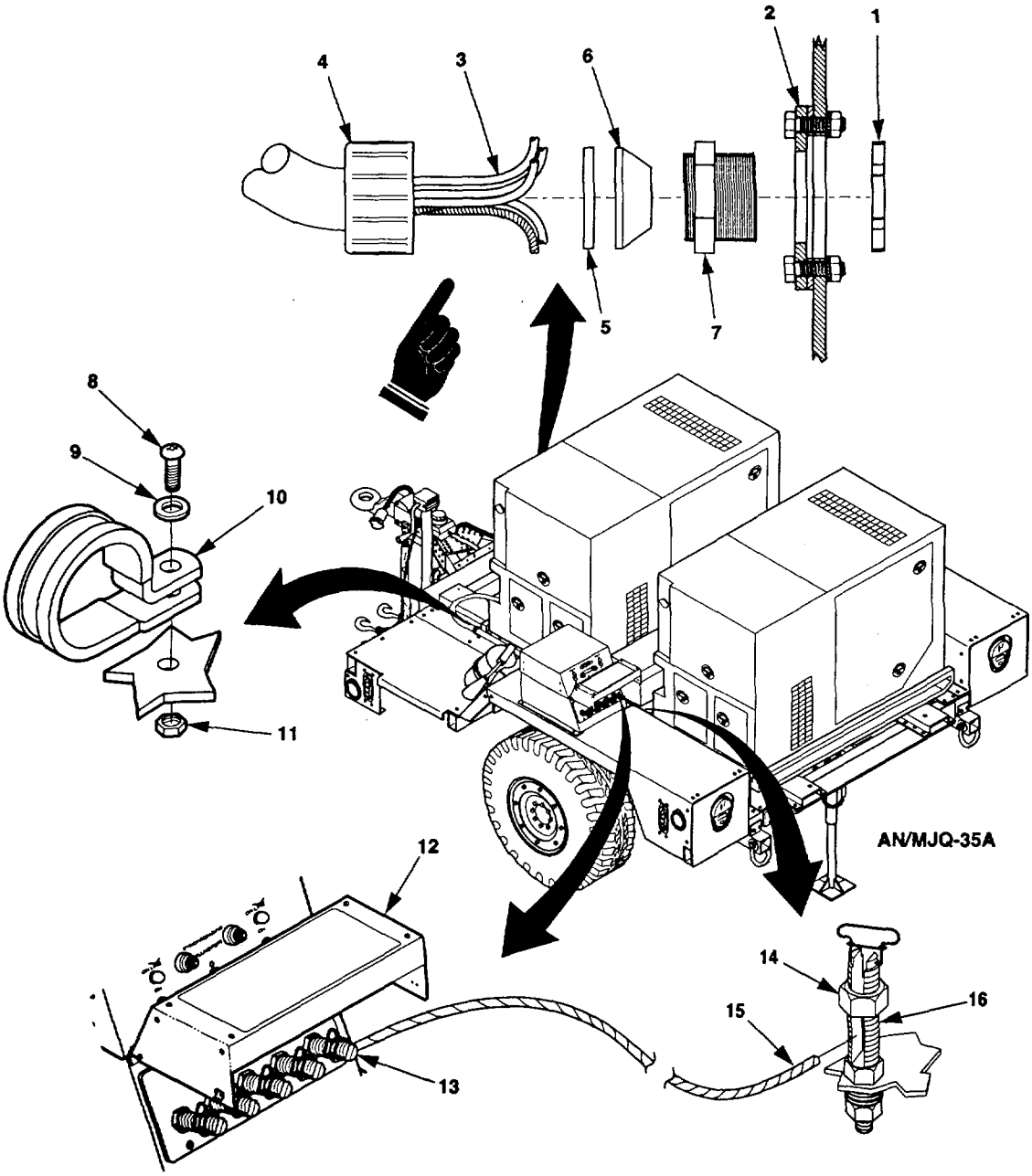

Figure 4-1.1. Installation of Power Cables on AN/MJQ-35A.

j. Unlatch and open switch box load terminal cover (12).

k. Connect loose end of ground wire (15) to switch box ground terminal (13).

l. Close and latch switch box load terminal cover (12).

4-5.2.3 Assembly of PU-797 and PU-797A. If the ground wire was disconnected for Level A preservation of the generator set, install ground wire as follows:

NOTE

Ground stud on high mobility trailer is different than one used on other trailers.

a. If the high mobility trailer (PU-797A) is being used, go to step f. For other trailers, perform steps b. through e. and then go to step h.

b. Remove wing nut (1, figure 4-2), two flat washers (2), hex nut (3), and flat washer (4) from ground stud (6).

c. Retrieve generator ground wire (5) from accessory box (8).

d. Place ground wire terminal (7) on ground stud (6).

WARNING

Ensure nut on ground terminals are properly secured creating a good ground. Failure to observe this warning could result in severe personal injury or death.

e. Install flat washer (4), hex nut (3), two flat washers (2), and wing nut (1).

f. Loosen nut (9) on high mobility trailer ground stud (10).

g. Insert wire (11) through slot of ground stud (10) and tighten nut (9).

h. Open generator load terminal access door (12).

i. Route loose end of ground wire (5 or 11) through cable access opening and pull loose end until it reaches ground terminal (13).

j. Connect ground wire loose end to ground terminal (13).

k. Close generator load terminal access door (12).

4-6 PRELIMINARY SERVICING AND ADJUSTMENT OF EQUIPMENT.

4-6.1 Generator Set. Refer to TM 9-6115-641-10, TM 9-6115-641-24, and TM 9-2815-252-24.

4-6.2 Trailer. Refer to TM 9-2330-202-14&P for Power Plant AN/MJQ-35 and Power Unit PU-797, TM 9-2330-392-14&P for Power Plant AN/MJQ-35A and Power Unit PU-797A, and TM 9-2330-213-14&P for Power Plant AN/MJQ-36.

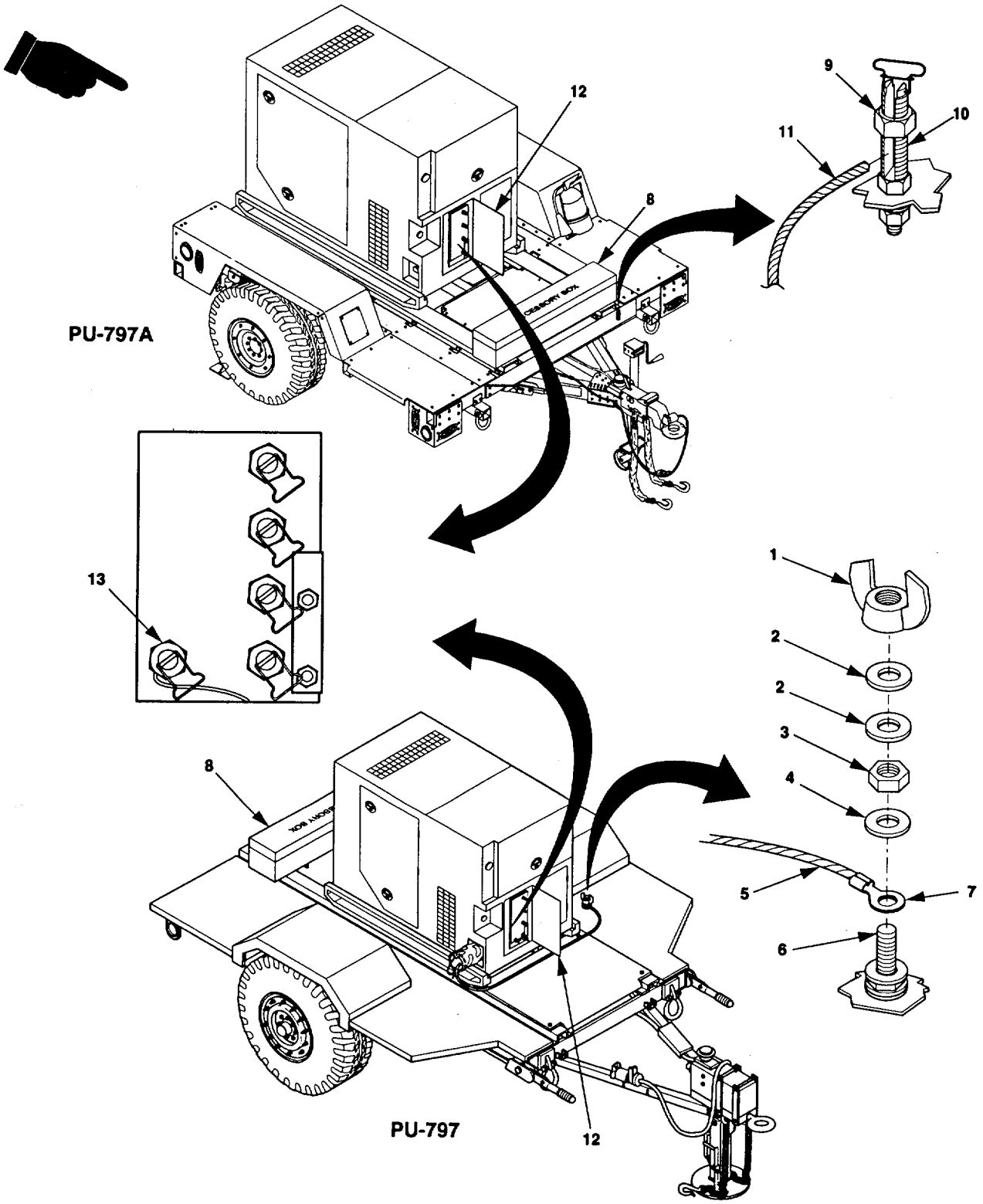

Figure 4-2. PU-797 and PU-797A Ground Wire Installation.

Section III. UNIT LUBRICATION

4-7 POWER PLANT/POWER UNIT LUBRICATION.

Detailed instructions for lubrication of major components of the power plants/power units are contained in the applicable generator set Lubrication Orders (LOs) and trailer TMs. The following paragraphs identify the applicable references and contain lubrication instructions that are not included in the references.

4-7.1 Generator Set Lubrication. Refer to LO 9-6115-641-12 for generator set and engine lubrication instructions. See Appendix E for expendable supplies and materials needed for lubrication.

4-7.2 Trailer Assembly Lubrication. Refer to TM 9-2330-202-14&P for Power Plant AN/MJQ-35 and Power Unit PU-797 trailer chassis lubrication instructions, TM 9-2330-392-14&P for Power Plant AN/MJQ-35A and Power Unit PU-797A trailer chassis lubrication instructions, and TM 9-2330-213-14&P for Power Plant AN/MJQ-36 trailer chassis lubrication instructions. See Appendix E for expendable supplies and materials needed for lubrication.

4-7.3 Rear Leveling-Support Jack Lubrication. The rear leveling-support jack is a modification to the standard 1 1/2 ton trailer chassis, the standard 1 ton trailer chassis, and the high mobility trailer chassis. Lubrication of this rear leveling-support jack is not covered in the trailer TMs. See figure 4-3 and lubricate the rear leveling-support jack semiannually, as follows:

WARNING

Dry cleaning solvent used to clean parts is potentially dangerous to personnel and property. Clean parts in a well-ventilated area. Avoid inhalation of solvent fumes. Wear goggles and rubber gloves to protect eyes and skin. Wash exposed skin thoroughly. Do not smoke or use near open flame or excessive heat. Failure to observe this precaution can cause injury to personnel or damage to equipment.

a. Clean the lubrication fitting (1) with dry cleaning solvent. Expendable supplies and materials needed for lubrication are listed in Appendix E.

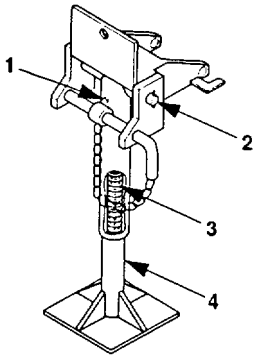

Figure 4-3. Rear Leveling-Support Jack Lubrication Points.

b. Inject sufficient GAA grease into lubrication fitting (1) to lubricate screw threads (3) inside leg base (4).

c. Apply OE lubricating oil to both ends of rear leveling-support jack pivot shaft (2).

Section IV. UNIT PREVENTIVE MAINTENANCE CHECKS AND SERVICES (PMCS)

4-8 INTRODUCTION TO UNIT PMCS TABLE.

Table 4-1 (PMCS) table) has been provided so you can keep your equipment in good operating condition and ready for its primary mission.

4-8.1 Warnings and Cautions. Always observe the **WARNINGS** and **CAUTIONS** appearing in your PMCS table. Warnings and cautions appear before applicable procedures. You must observe these WARNINGS and CAUTIONS to prevent serious injury to yourself and others or prevent your equipment from being damaged.

4-8.2 Explanation of Table Entries.

4-8.2.1 Item No. Column. Numbers in this column are for reference. When completing DA Form 2404 (Equipment Inspection and Maintenance Worksheet), include the item number for the check/service indicating a fault. Item numbers also appear in the order that you must do checks and services for the intervals listed.

4-8.2.2 Interval Column. This column tells you when you must do the procedure in the procedure column. Perform procedures such as "Monthly" or "Quarterly" at the listed calendar interval. Perform procedures designated by number of hours when the equipment has been operated for that many hours.

4-8.2.3 Item to be Checked or Serviced Column. This column lists the item to be checked or serviced.

4-8.2.4 Procedure Column. This column gives the procedures for checking or servicing the item listed in the item to be checked or serviced column. You must perform the procedure to know if the power plant/power unit is ready or available for its intended mission or operation. You must do the procedure at the time stated in the interval column.

4-8.2.5 Not Fully Mission Capable if: Column. Information in this column tells you what faults will keep the power plant/power unit from being capable of performing its primary mission. If checks or services show faults listed in this column, do not return the power plant/power unit to service until the faults have been corrected.

4-8.3 Other Table Entries. Be sure to observe all special information and notes that appear in the table.

4-8.4 Special Instructions.

a. Trailer, generator, and engine PMCS must be done along with the Power Unit/Power Plant PMCS. Refer to TM 9-2330-213-14&P for ANIMJQ-36 trailer PMCS, TM 9-2330-202-14&P for AN/MJQ-35 and PU-797 trailer PMCS, and TM 9-2330-392-14&P for AN/MJQ-35A and PU-797A trailer PMCS. Refer to TM 9-6115-641-24 for generator PMCS and TM 9-2815-252-24 for engine PMCS.

b. Preventive maintenance is not limited to performing the checks and services listed in the PMCS table. Covering unused receptacles, stowing unused accessories, and other routine procedures such as equipment inventory, cleaning components, and touch-up painting are not listed in the table. These are things you should do any time you see that they need to be done. If a routine check is listed in the PMCS table, it is because experience has shown that problems may occur with that item. Take along Tools and cleaning cloths needed to perform the required checks and services. Figure 4-4 is a routing diagram that shows the locations of the items to be

checked/serviced. The callout numbers on figure 4-4 correspond to the numbers listed in the Item No. column of table 4-1.

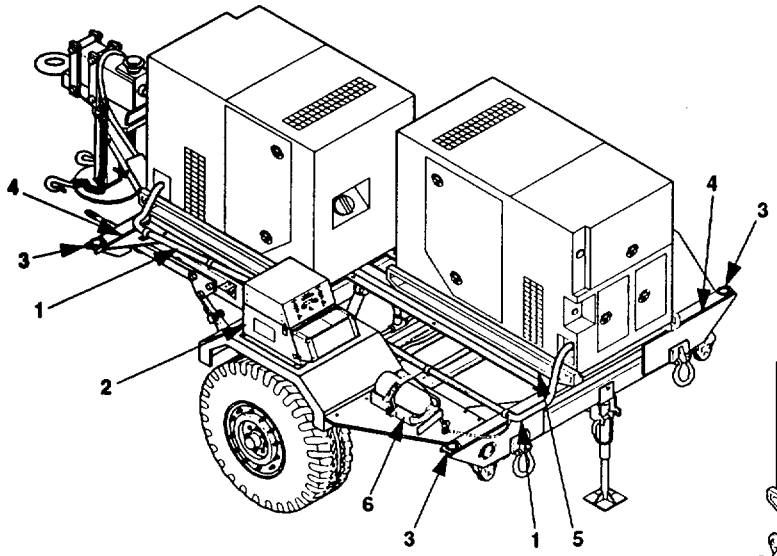

AN/MJQ-35

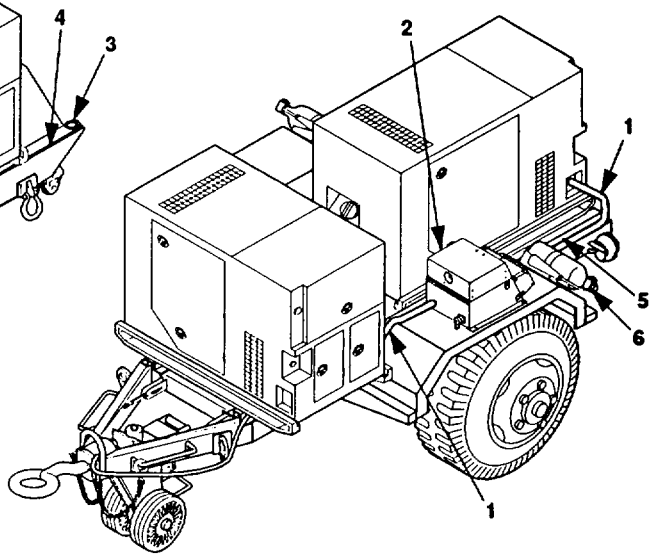

AN/MJQ-36

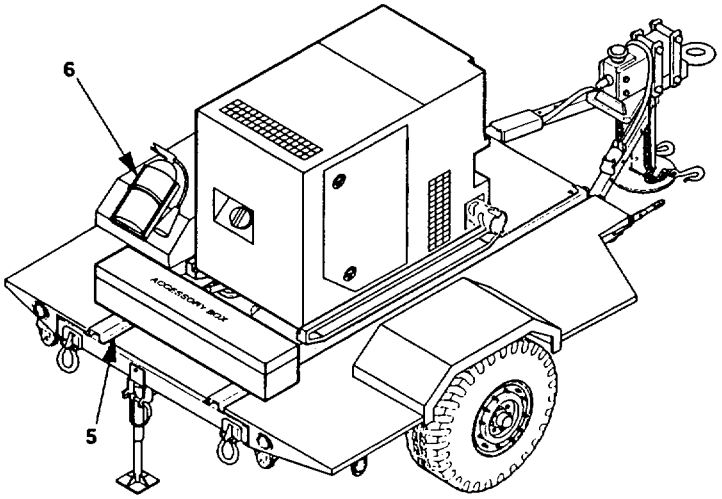

PU-797

Figure 4-4. Unit PMCS Routing Diagram (Sheet I of 2).

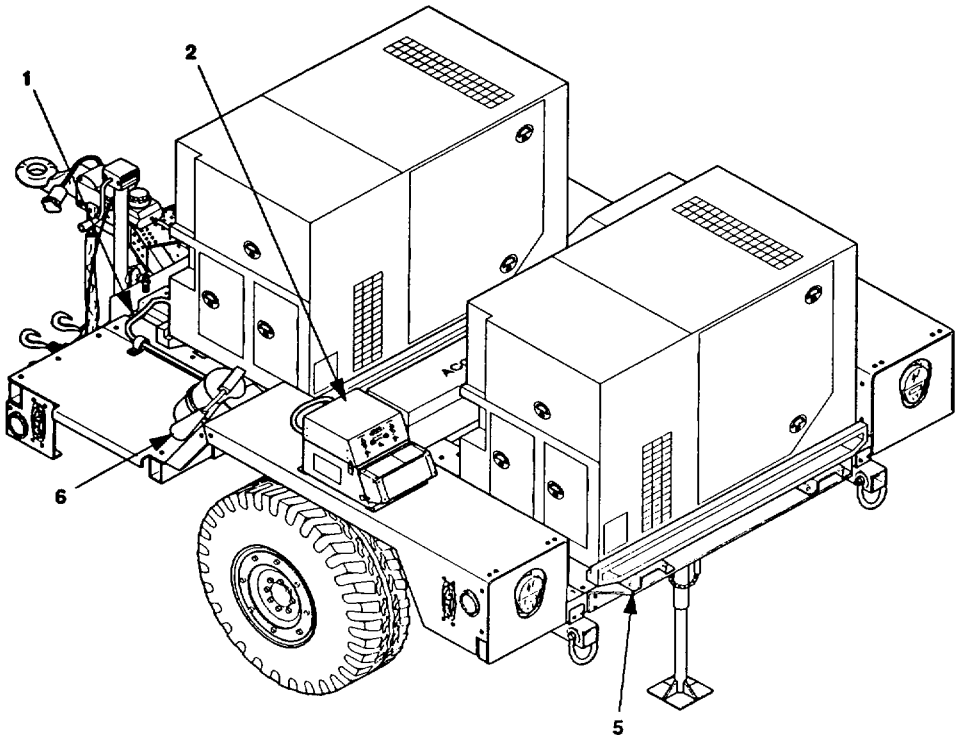

AN/MJQ-35A

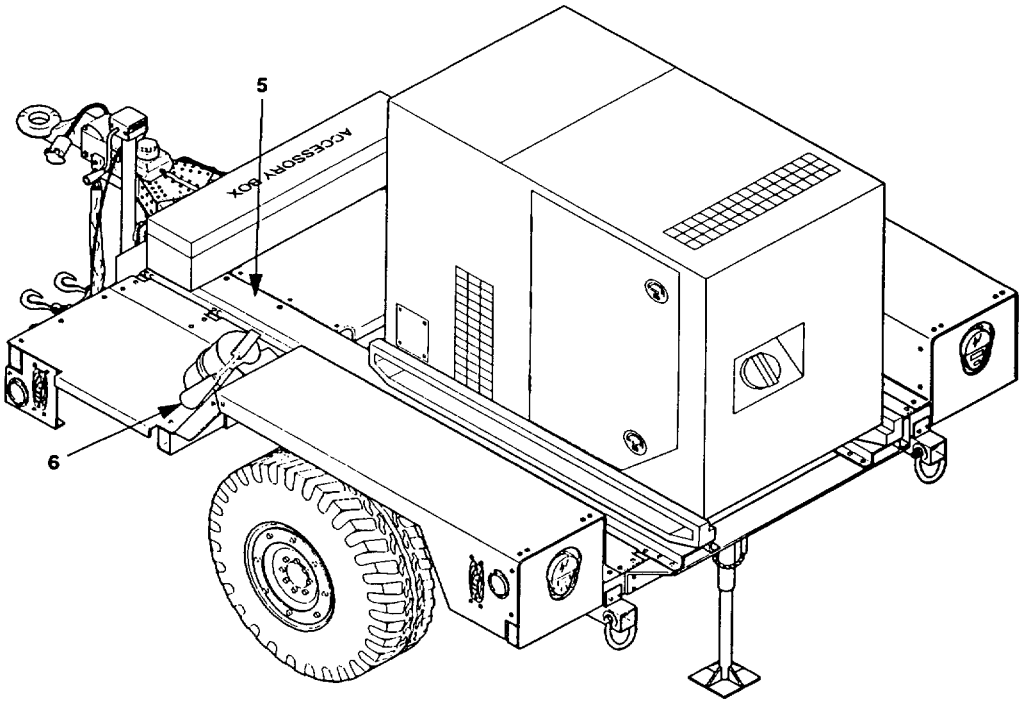

PU-797A

Figure 4-4. Unit PMCS Routing Diagram (Sheet 2 of 2).

Table 4-1. Unit Preventive Maintenance Checks and Services

Item No.	Interval	Location Item to Check/Service	Procedure	Not Fully Mission Capable if:
		WARNING Before performing any maintenance that requires climbing on or under trailer, make sure that trailer handbrakes are set, trailer front landing leg/support leg is lowered, and leveling- support jack is lowered. Injury to personnel could result from trailer suddenly rolling or tipping.		
1	Semi-Annually	POWER CABLES (AN/MJQ-35, AN/MJQ-35A, AND AN/MJQ-36 ONLY)	Inspect power cables for worn, frayed, or cracked insulation, loose terminal lugs, and loose connections. Tighten as needed.	Power cable is unserviceable.
2	Semi-Annually	SWITCH BOX ASSEMBLY (AN/MJQ-35, AN/MJQ-35A, AND AN/MJQ-36 ONLY)	Inspect switch box assembly (refer to paragraph 4-13).	
3	Semi-Annually	TRAILER LIFTING RINGS (AN/MJQ-35, AND AN/MJQ-36 ONLY)	Inspect for wear, damage, and loose attaching hardware. If loose or damaged, refer to paragraph 4-21.	
4	Semi-Annually	TRAILER LIFTING BRACKETS (AN/MJQ-35 AND AN/MJQ-36 ONLY)	Inspect for cracks, damage, or broken welds.	
5	Semi-Annually	MOUNTING RAILS	Inspect for cracks and deformation	Mounting rail is cracked or deformed.
6	Semi-Annually	FIRE EXTINGUISHER	a. Inspect for broken seal and damage to handle.	
			b. Weigh to determine whether charge is sufficient. Weight is 13 pounds when fully charged. If weight is 12.5 pounds or less, send to specialized activity for recharging.	Fire extinguisher not charged.

Section V. TROUBLESHOOTING

4-9 GENERAL.

Paragraph 4-9.3 covers troubleshooting procedures for components unique to the power plant/power unit. Refer to the applicable generator set or trailer technical manual, as listed below, for generator and trailer troubleshooting procedures.

4-9.1 Generator Set Troubleshooting. Refer to TM 9-6115-641-24 and TM 9-2815-252-24.

4-9.2 Trailer Troubleshooting. Refer to TM 9-2330-202-14&P for Power Plant AN/MJQ-35 and Power Unit PU-797, TM 9-2330-392-14&P for Power Plant AN/MJQ-35A and Power Unit PU-797A, and TM 9-2330-213-14&P for Power Plant AN/MJQ-36.

4-9.3 Power Plant Troubleshooting. The following symptom index contains troubleshooting information for locating and correcting operating troubles that may develop in components unique to the power plant end item. The symptom index lists malfunctions associated with switch box operation. Each malfunction listing includes a reference to the applicable figure that contains a chart. The chart will help you determine probable causes and corrective actions to take. The symptom index cannot list all malfunctions that may occur, nor all tests or inspections and corrective actions. If a malfunction is not listed or cannot be corrected by listed corrective actions, notify next higher level of maintenance.

SYMPTOM INDEX

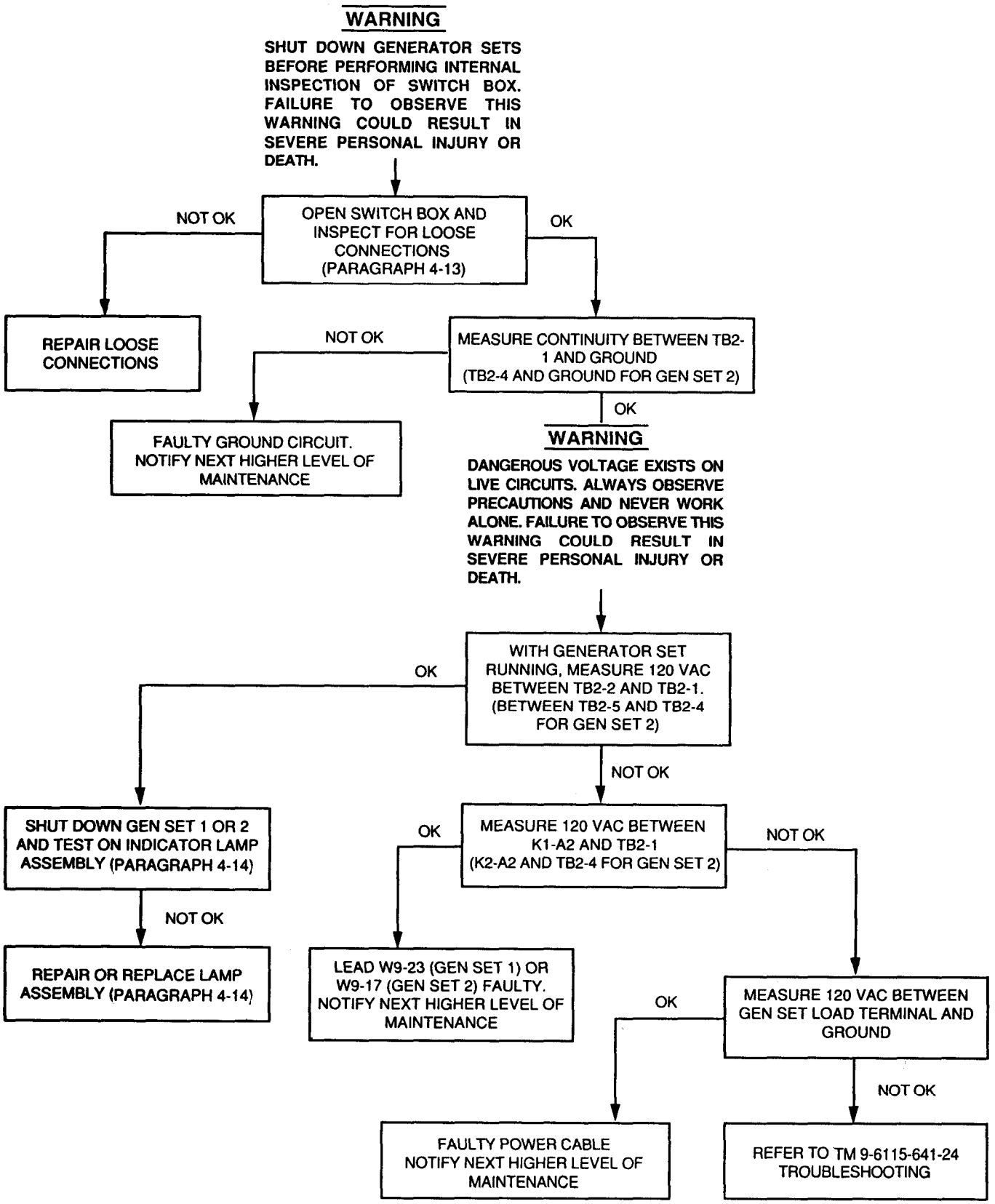

Figure 4-5. ON Indicator Lamp Serviceable But Fails 10 Light With Generator Set Running.

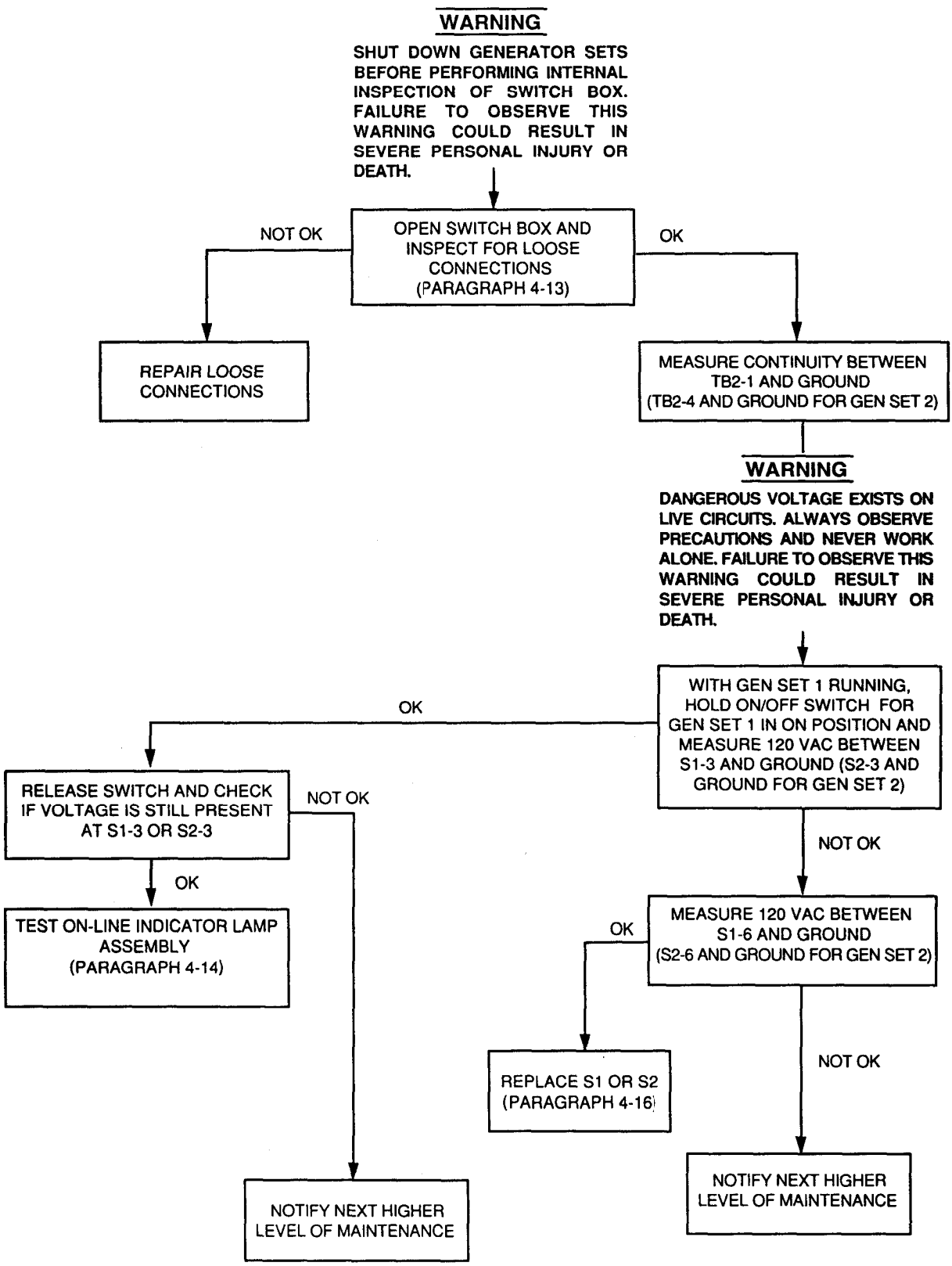

Figure 4-6. ON-LINE Indicator Lamp Serviceable But Fails To Light When ON/OFF Switch Is Placed In ON Posilion.

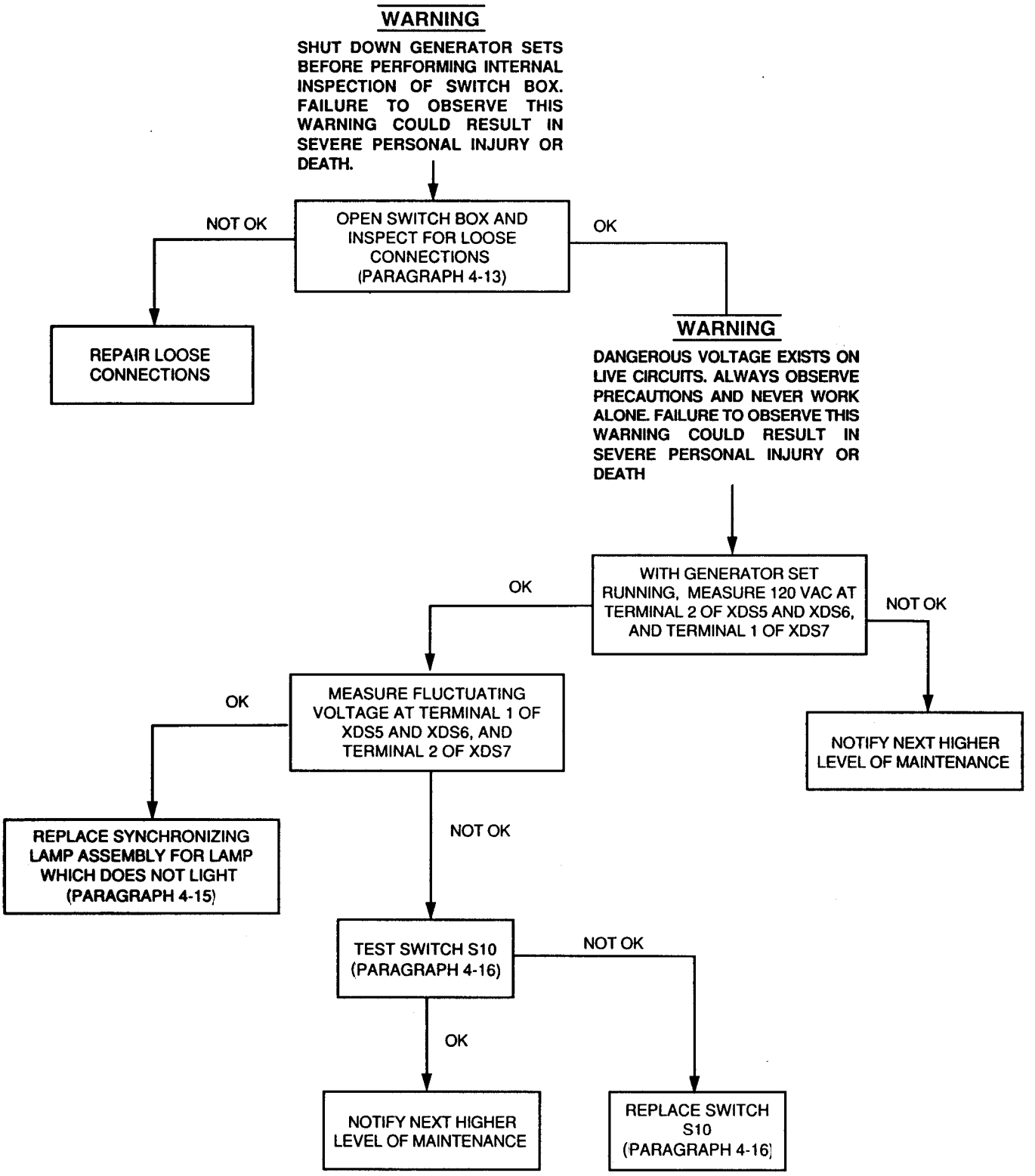

Figure4-7. SYNCHRONfZING Indicator Lamps Fail To Light When TRANSFER Switch Is Operated.

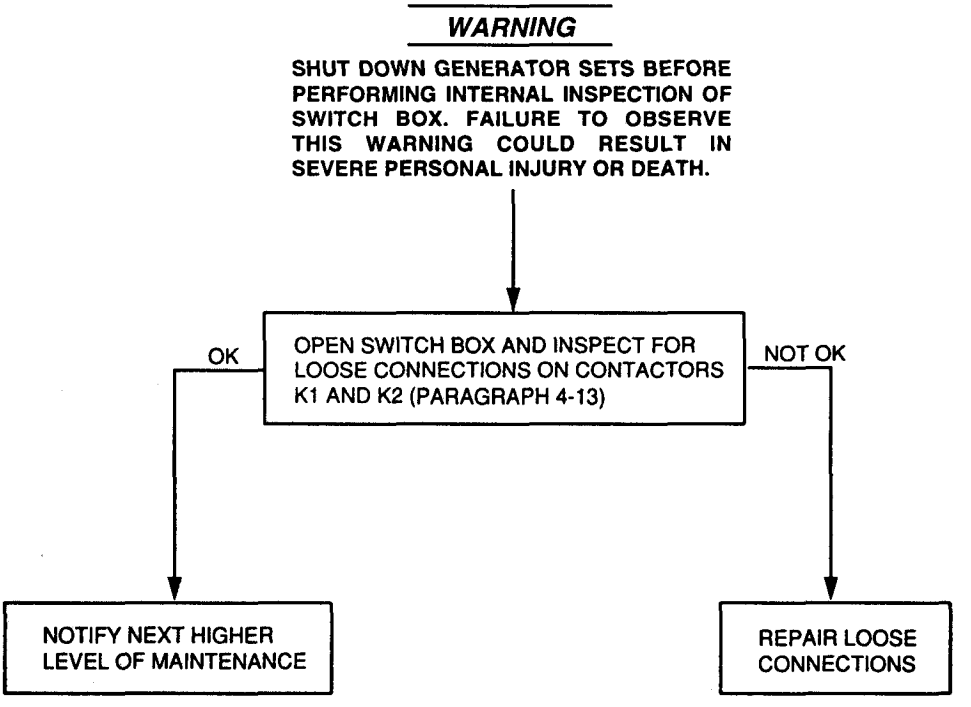

Figure 4-8. No Power To Load Wtih ON-LINE IndicaforLamp On.

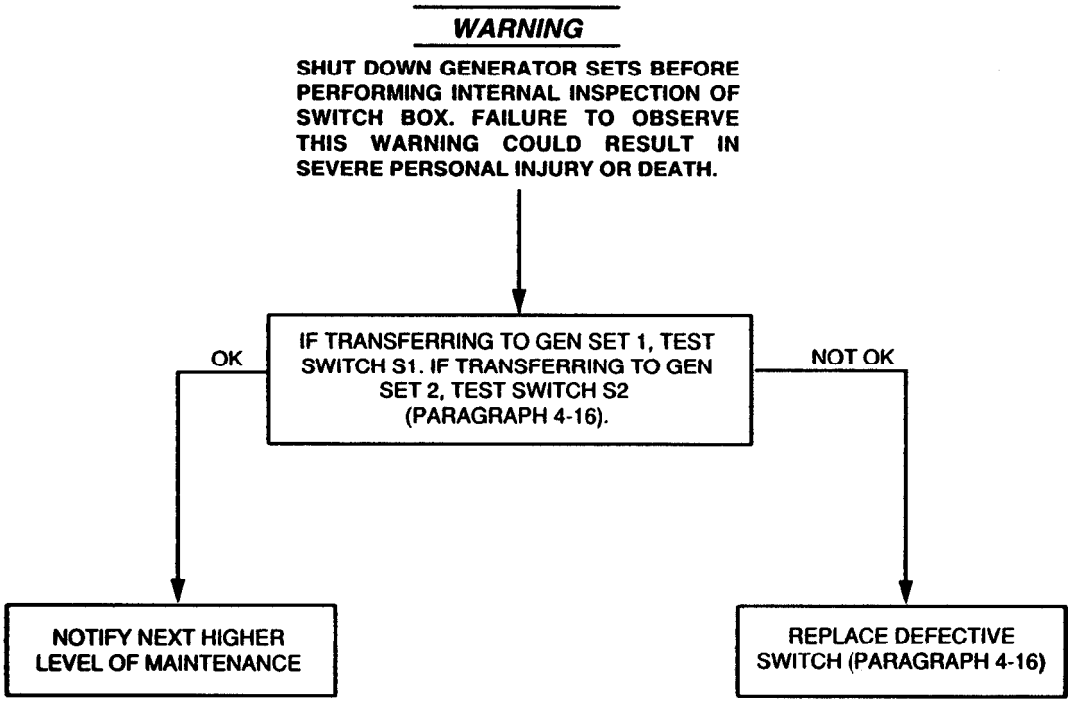

Figure 4-9. All Indicator Lamps Working Properly But Load Will Not Transfer.

Section VI. MAINTENANCE PROCEDURES.

4-10 MAINTENANCE OF GENERATOR SETS.

Refer to generator TM 9-6115-641-24 and engine TM 9-2815-252-24.

4-11 MAINTENANCE OF TRAILERS.

Refer to TM 9-2330-202-14&P for Power Plant AN/MJQ-35 and Power Unit PU-797, TM 9-2330-392-14&P for Power Plant AN/MJQ-35A and Power Unit PU-797A, and TM 9-2330-213-14&P for Power Plant AN/MJQ-36.

4-12 POWER CABLE MAINTENANCE.

This task covers:
a. Test
b. Removal
c. Inspection

INITIAL SETUP

Tools	Equipment Conditions
Tool Kit, General Mechanic's (item 1, appendix B)	Reference
Multimeter, (item 2 appendix B)	Both generator sets shut down; paragraph 2-5.3.3.

WARNING

Make sure generator sets are shut down before performing any electrical maintenance. Failure to observe this warning could result in severe personal injury or death.

TEST

1. Release two clamping catches (11, figure 4-10) and open switch box cover (1).

2. Disconnect power cable to be tested from generator set load terminals.

NOTE

Cable leads L1, L2, and L3 terminate in switch box at contractor K1 for Generator 1 (front) and contractor K2 for Generator 2 (rear). LO and Ground leads terminate at switch box load terminals.

3. Use multimeter to check continuity of each electrical lead in power cable. Each lead should have continuity between bare end of conductor at generator set load terminal and terminal lug (9). Check for continuity between lead marked ground and switch box ground load terminal, lead marked LO and switch box LO load terminal, lead marked L1 and contractor terminal Al, lead marked L2 and contractor terminal B1, and lead marked L3 and contractor terminal C1. If no continuity, notify next higher level of maintenance.

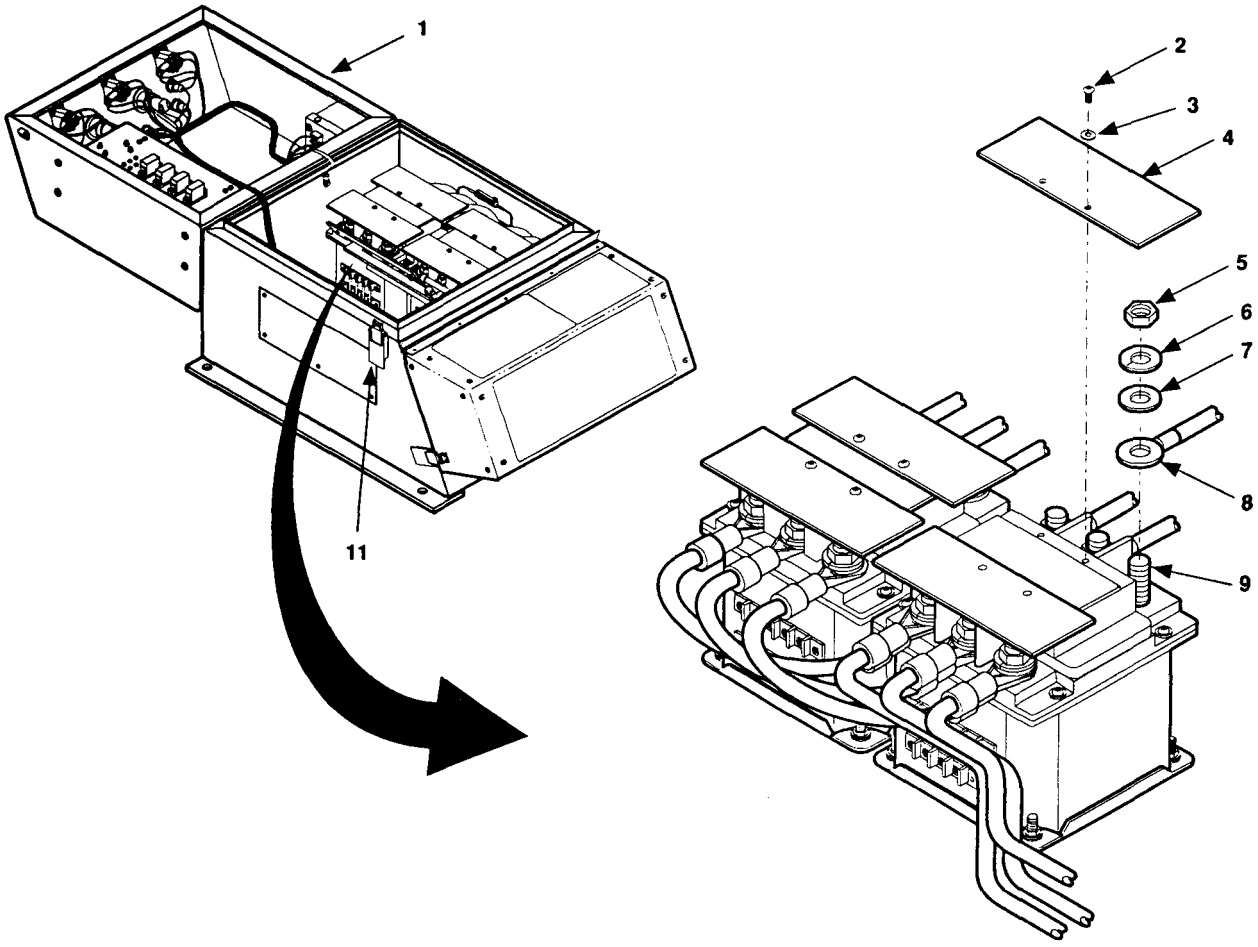

Figure **4-10. Power Cable** *Connections to Switch Box Contactors.*

4. Use multimeter to check for shorts in power cable. Check for continuity between ground and L0, L1, L2, and L3; L0 and L1, L2, and L3; L1 and L2, and L3; and L2 and L3. Continuity in any of these tests indicates a shorted cable which must be replaced.

5. Close switch box cover (1) and secure with clamping catches (11).

REMOVAL

1. Disconnect electrical leads and ground lead from generator set.

2. Pull power cable from stuffing tube.

   a. Remove stufiing tube compression nut (8, figure 4-11) from stuffing tube body (11).

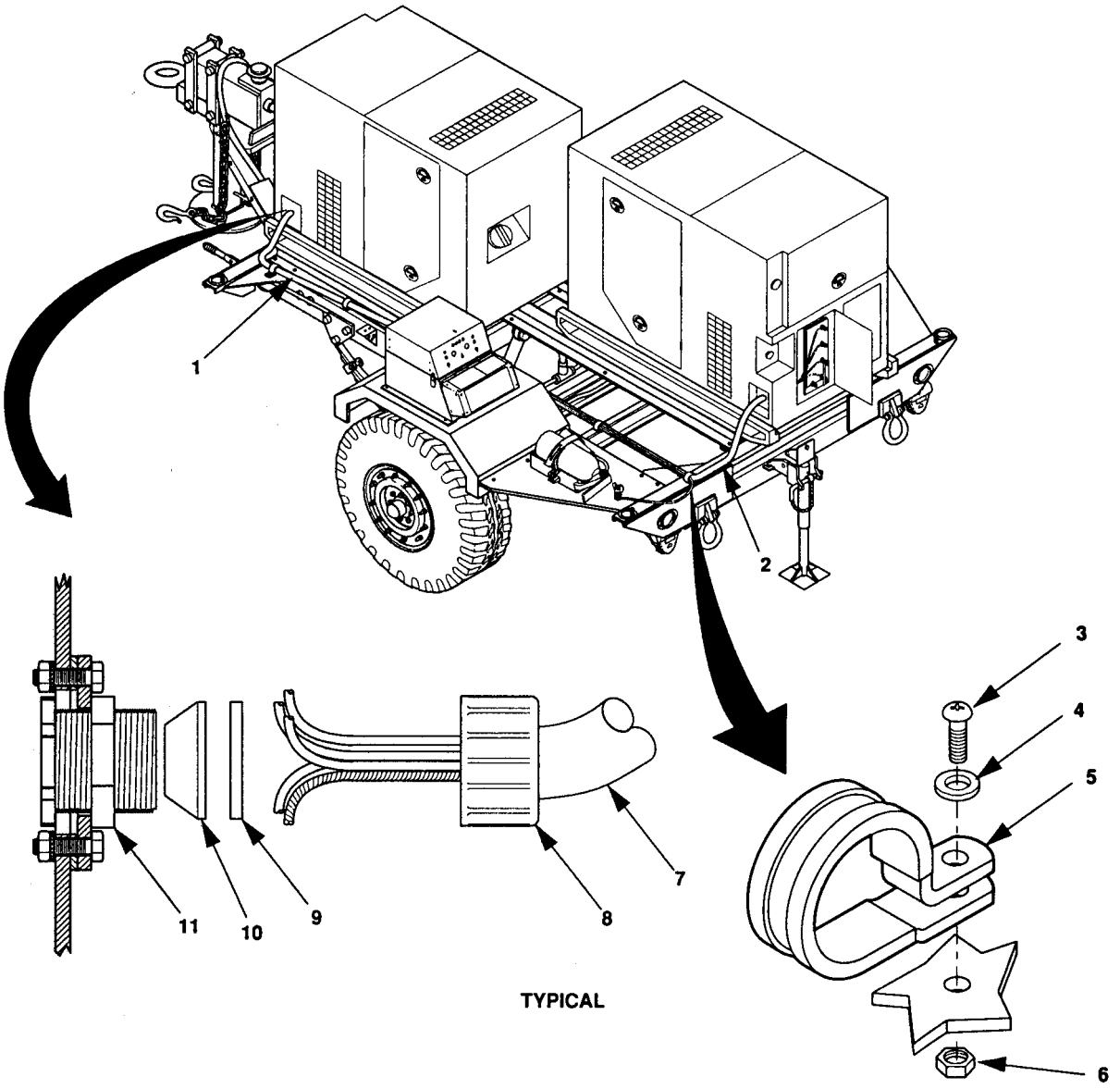

Figure 4-11. Disconnect Power Cable from Generator Set.

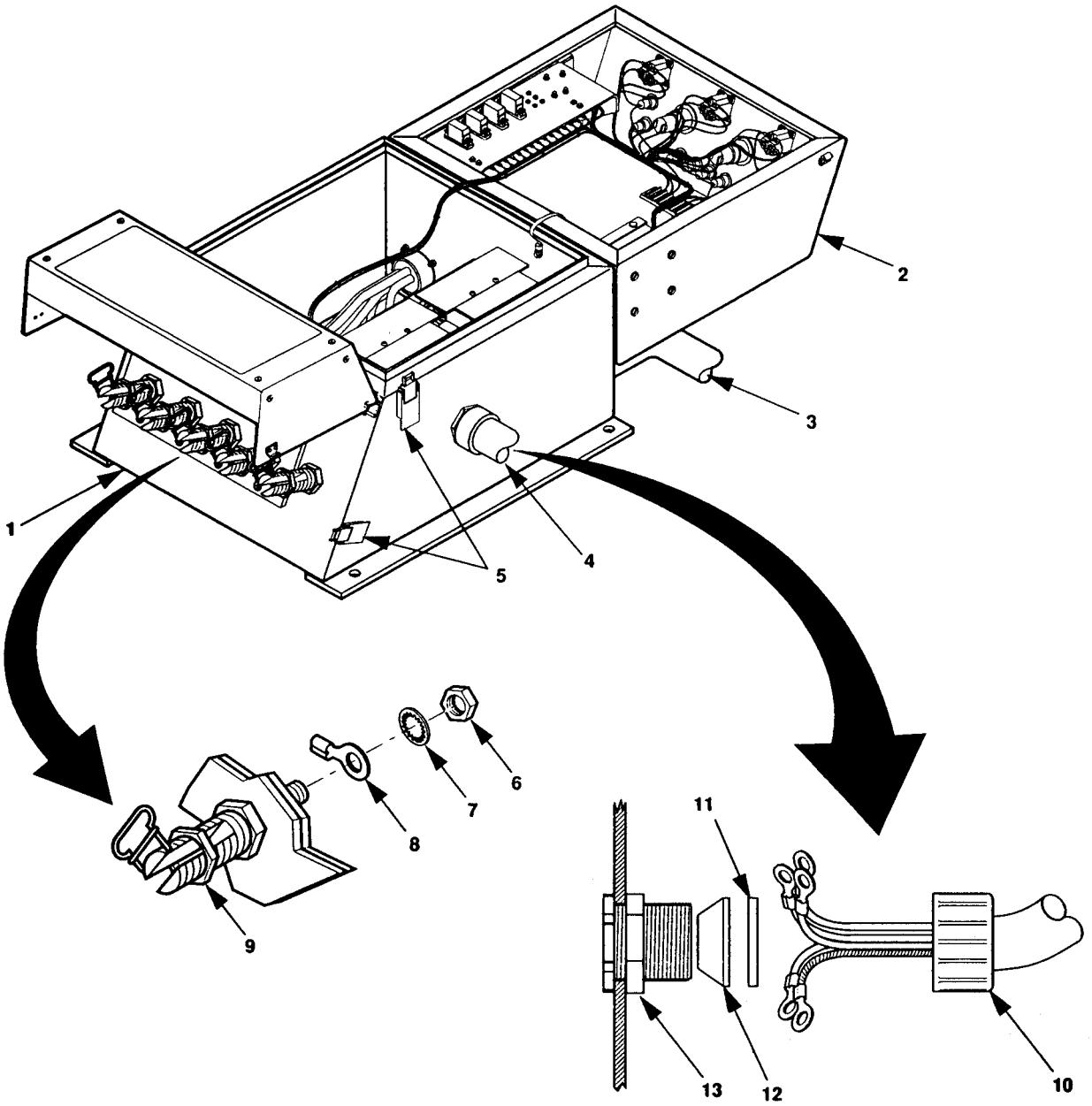

Figure 4-12. Disconnect Power Cable From Switch Box Terminals.

b. Pull power cable (1 or 2) through stufhng tube until ends of power cable are free of stuffing tube body (11).

c. Remove washer (9), seal (10), and stuffing tube compression nut (8) from power cable (1 or 2). Place items back on stuffing tube and tighten.

3. Disconnect power cable from switch box.

a. Release clamping catches (11, figure 4-10) and open switch box cover (l).

b. Remove two screws (2) and lock washers (3) from contactor terminal shield (4) of contactor associated with power cable being removed.

c. Remove contactor terminal shield (4).

d. Remove nuts (5), lock washers (6), and flat washers (7) from contactor terminals (9).

e. Lift terminal leads (8) from contactor terminals (9). Remove only the terminal leads associated with electrical leads of power cable being removed. If necessary to remove other terminal leads to access those for power cable being disconnected, reinstall other terminal leads onto contactor terminals (9).

f. Install flat washers (7), lock washers (6), and terminal nuta (5) on contactor terminals (9).

g. Remove hex nuts (6, figure 4-12) and internal tooth washers (7) from ground and LO terminals (9) of switch box.

h. Remove only the wire associated with the power cable being replaced. If necessary to remove other terminal leads to access those for power cable, reinstall other terminal leads on terminal (9).

i. Place internal tooth washers (7) over the end of terminals (9) and loosely install the hex nuts (6).

j. Remove stuffing tube compression nut (10) from stuffing tube body (13).

k. Pull power cable (3 or 4) through stuffing tube until ends of power cable are free of stuffing tube body (13).

l. Remove washer (11), seal (12), and stuffing tube compression nut (10) from power cable (3 or 4). Place items back on stufllng tube and tighten.

4. Remove power cable from clamps.

a. Remove self-locking nuts (6, figure 4-11), screws (3), and flat washers (4) securing clamps (5) to trailer. Remove cable (3 or 4).

b. Remove clamps (5) off power cable (3 or 4).

INSTALLATION

1. Install stuffing tube compression nut (10, figure 4-12), washer (11), and seal (12) on end of power cable (3 or 4) having leads with terminal lugs.

2. Insert terminal lug end of power cable (3 or 4) into stuffing tube assembly (13) and slide forward until end of power cable outer covering is visible inside switchbox (1).

3. Slide seal (12), washer (11), and stutling tube compression nut (10) forward and tighten compression nut.

4. Remove hex nut (6) and internal tooth washer (7) from load terminal L0 (9) and install lead marked LO.

5. Install internal tooth washer (7) and hex nut (6). Tighten hex nut.

6. Repeat steps 4 and 5 for ground terminal and ground lead.

7. Remove nuts (5, figure 4-10), lock washers (6), and flat washers (7) from contactor terminal (9) of contactor associated with power cable being installed.

8. Connect power cable lead marked L1 to contactor terminal A2, lead marked L2 to contactor terminal B2, and lead marked L3 to contactor terminal C2.

9. Install flat washers (7), lock washers (6), and nuts (5) on contactor terminals (9). Tighten nuts.

10. Install contactor terminal shield (4), lock washers (3), and screws (2).

11. Close switch box cover (1) and secure with clamping catches (11).

12. Repeat steps 1,2, and 3 above and install other end of power cable in stuffing tube on generator set.

13. Connect leads to generator set load terminals as follows:

Lead Marked	to Generator Set Load Terminal
Ground	Ground
LO	L0
L1	L1
L2	L2
L3	L3

14. Place clamps (5, figure 411) on replacement power cable (3 or 4) and existing ground wire going from switch box-ground-terminal and trailer ground stud, and install flat washers (4), screws (3), and self-locking nuts (6).

4-13 SWITCH BOX MAINTENANCE.

This task covers:

a. Test
b. Removal
c. Inspection
d Removal

INITIAL SETUP

Tools

Tool Kit, General Mechanic's (item 1, appendix B)
1/4 Inch Drill (item 2, appendix B)
Blind Head Riveter (item 5, appendix B)

Material/Parts

Blind Rivets
Gasket
Lock Washers (AN/MJQ-35A only) (item 1, appendix I)

Equipment Conditions

Reference

Both generator sets shut down, paragraph 2-5.3.3. Trailer handbrakes set, front support leg/landing leg lowered, and rear leveling-support jack lowered; paragraph 2-3.2.1. Power cables and ground disconnected from switch box; paragraph 4-12.

INSPECT

1. Release clamping catches (5, figure 4-13) and open switch box cover (9).
2. Inspect all leads and wires for worn or deteriorated insulation that reveals bare spots in conductors. If found, notify next higher level of maintenance.
3. Inspect all leads and wires for loose or disconnected terminal lugs. If found, repair and/or notify next higher level of maintenance.
4. Inspect all terminals for looseness. Tighten as needed.
5. Inspect all component mountings for looseness. Tighten as needed.
6. Inspect gasket (10) on switch box. If required, replace gasket (figure G-7, appendix G).
7. Close switch box cover (9) and secure with clamping catches (5).

REPAIR

1. CLAMPING CATCH REPLACEMENT.
   a. Drill out rivets (1) and remove defective clamping catch (2).
   b. Position new clamping catch (2) and secure with rivets (1).

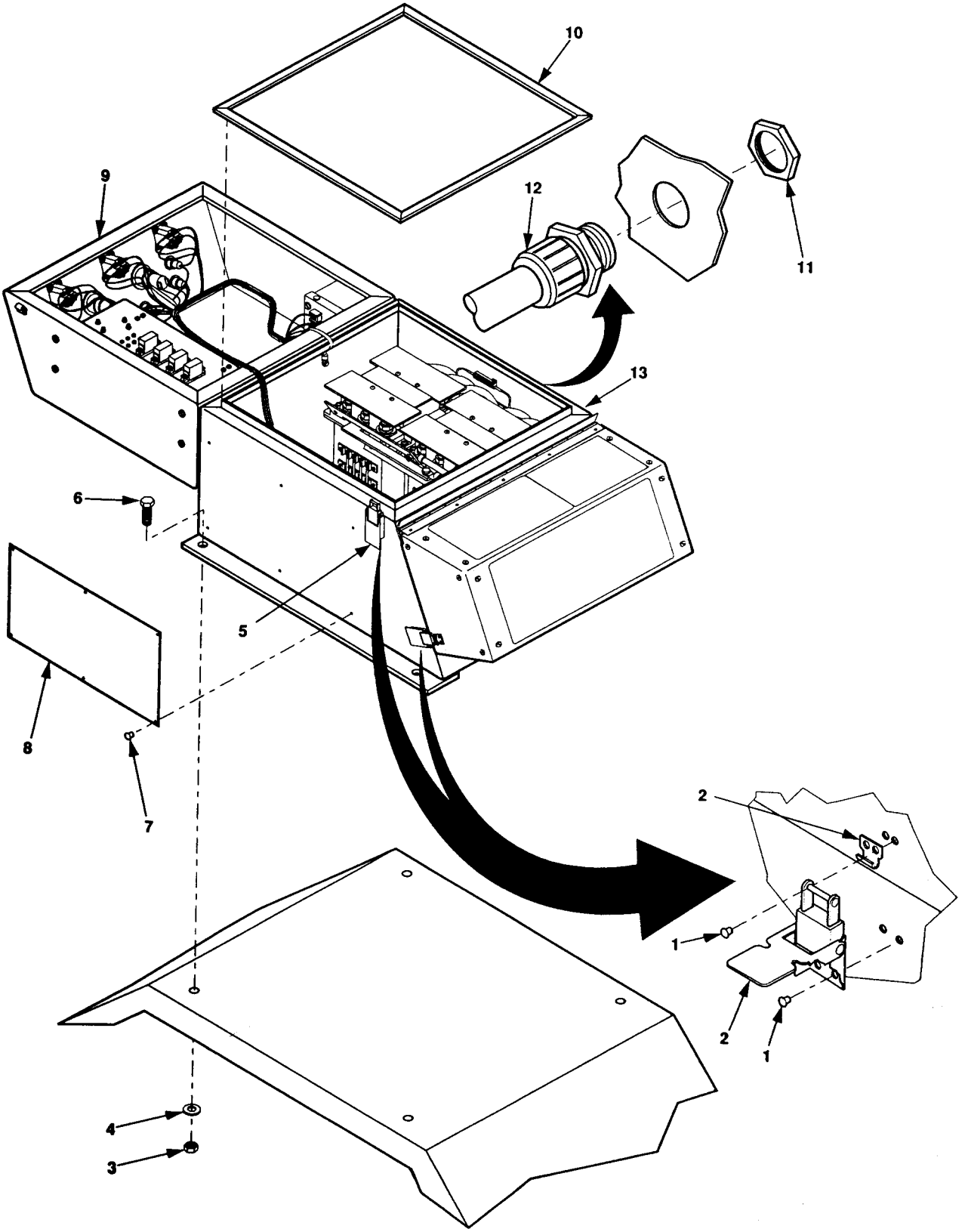

Figure 4-13. Switch Box Repair.

2. DATA PLATE REPLACEMENT.

a. Drill out rivets (7) and remove schematic diagram data plate (8).

b. Position new schematic diagram data plate (8) and secure with blind rivets (7).

3. GASKET REPLACEMENT.

a. Remove old gasket (10) from switch box and scrape surface to remove old cement.

b. Cut new gasket material and cement to switch box. Refer to figure G-7, appendix G

4. STUFFING TUBE REPLACEMENT.

a. Unscrew lock nut (11) from stuffing tube body (12) of stuffing tube and remove from switch box.

b. Insert stuffing tube body (12) through hole in switch box and secure with locknut (11).

NOTE

Switch box mounting hardware for AN/MJQ-35A (plain nuts, lock washers, flat washers, and cap screws) differs from that used on other power plants but removal and installation instructions are similar.

REMOVAL

1. Remove power cables and ground cable (paragraph 4-12).

2. Remove four self-locking nuts (3), flat washers (4), and cap screws (6), securing switch box (13) to fender. Remove switch box (13).

INSTALLATION

1. Position switch box (13) on trailer fender.

2. Install four cap screws (6), flat washers (4), and self-locking nuts (3).

3. Connect power cables and ground cable (paragraph 4-12).

4-14 INDICATOR LIGHT ASSEMBLY MAINTENANCE.

This task covers: a. Test
b. Removal
c. Repair
d. Installation

INITIAL SETUP

Tools

Tool Kit, General Mechanic's
(item 1, appendix B)
Soldering Gun GT7A-3
(item 2, appendix B)
Hand Operated Terminal Crimping Tool
(item 2, appendix B)

Materials/Parts

Insulation Sleeving, Heat Shrinkable
Terminal, Lug, Crimp, 22-18 AWG, 0.138 Stud
Solder

Equipment Conditions

Reference

Both generator sets shut down, paragraph 2-5.3.3.
Switch box cover open.

TEST

1. Measure for continuity between terminals (5, figure 4-14). If continuity exists, replace lamp housing.

2. Measure for continuity of indicator light assembly leads (7) between terminals (5 and 8) in accordance with table 4-2.

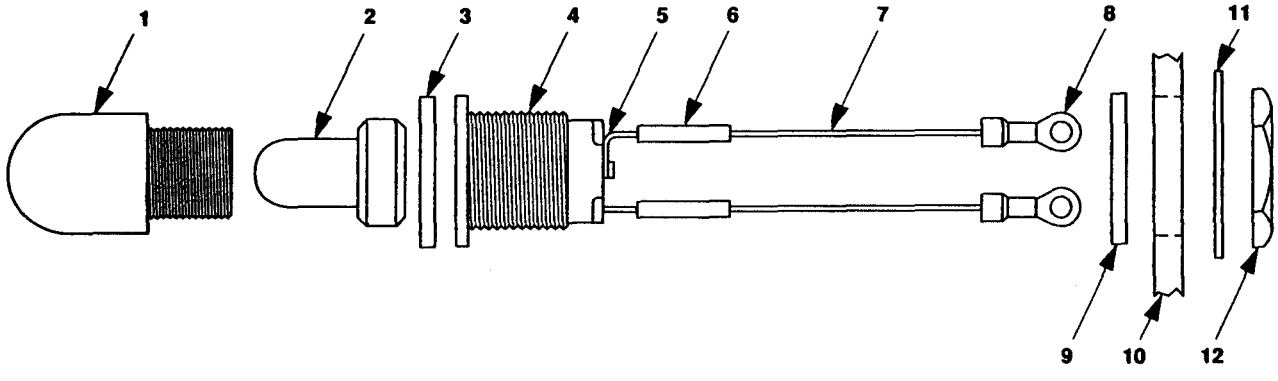

Figure 4-14. Indicator Light Assembly.

Table 4-2. Indicator Light Assernbly Test Points

FROM	TO
DS1 (center contact)	TB2-2
DS1 (side contact)	TB2-1
DS2 (side contact)	TB2-4
DS2 (center contact)	TB2-5
DS3 (side contact)	TB2-1
DS3 (center contact)	S1-3
DS4 (side contact)	TB2-4
DS4 (center contact)	S2-3

REMOVAL

1. Unscrew lens (1) and remove and save lens (l), lamp (2), and O-ring (3).

NOTE

Spare bulb assemblies do not come with leads. Unsolder for removal.

2. Tag and discomect terminal leads (7) from applicable switch box components.

3. Cut wire ties as required.

4. Remove nut (12) and lock washer (11).

!5. Pull housing (4) and attached parts (5 through 8) through opening in switch box cover (10).

REPAIR

1. DISASSEMBLY

   a. Unscrew and remove lens (l). Do not take O-ring (3) out of lens (l).

   b. Take lamp (2) out of lens (1) or housing (4), as applicable.

   c. Remove O-ring (9).

   d. Cut and remove insulation sleeving (6) from both wire leads (7).

   e. Unsolder and remove wire leads (7) from terminals (5).

2. ASSEMBLY

   a. Solder one end of each wire (7) to a housing terminal (5).

   b. Install insulation sleeving (6) over each soldered connection and heat shrink to a firm fit.

   c. Crimp a terminal lug (8) onto end of each wire (7).

   d. Install O-ring (9).

INSTALLATION

1. Insert terminal leads (7) through opening in switch box housing (10) and pull through util O-ring (9) rests against switch box cover (10).
2. Install lock washer (11) and mounting nut (12).
3. Connect terminal lugs (8) to switch box components in accordance with table 4-2.
4. Insert lamp (2) and O-ring (3) into lens (1).
5. Install lens (1) into housing (4) and hand tighten.

4-15 SYNCHRONIZING LIGHT MAINTENANCE.

This task covers: a. Test
b. Removal
c. Installation

INITIAL SETUP

Tools

Tool Kit, General Mechanic's (item 1, appendix B)

Material/Parts

Solder

Equipment Conditions

Reference

Both generator sets shut down, paragraph 2-5.3.3.
Switch box cover open.

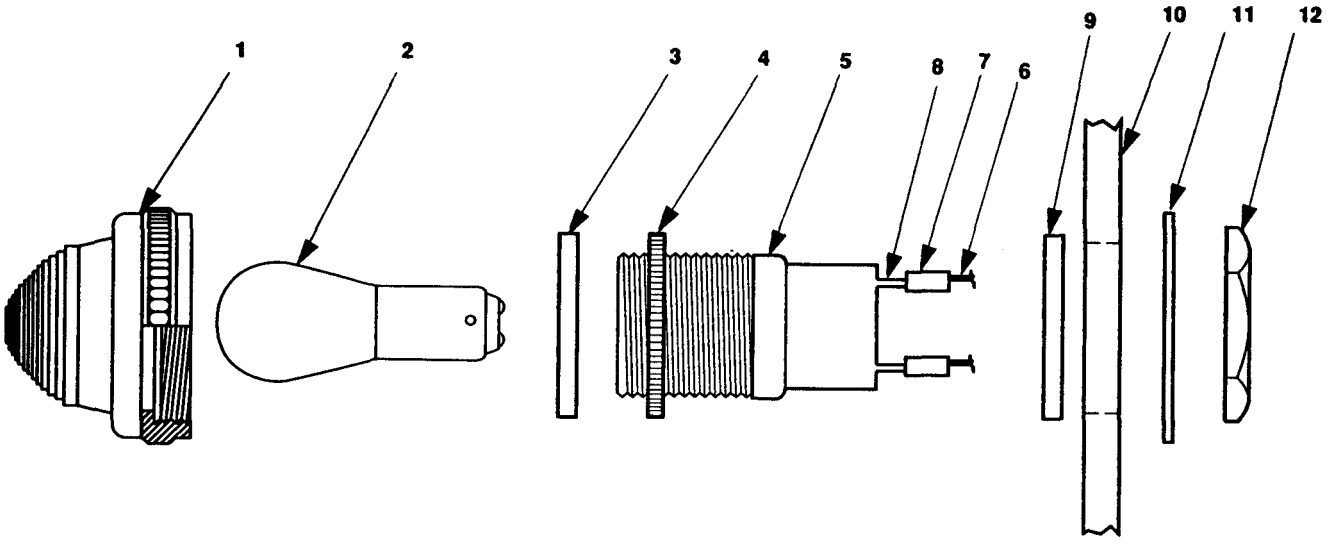

Figure 4-15. Synchronizing Light

TEST

Remove lens (1, figure 4-15) and bulb (2) and measure for continuity between terminals (8). If continuity exists, replace lamp housing.

REMOVAL

NOTE

The switch box has three synchronizing lights. Replacement procedures are the same for each synchronizing lights.

1. Cut and remove insulation sleeving (7) from both leads (6).

2. Tag leads (6) and unsolder.

3. Remove mounting nut (12), internal tooth lock washer (11), and housing body (5).

INSTALLATION

1. Position rubber gasketa (3 and 9) against mounting collar (4). If necessary, turn mounting Collar (4) until proper amount of threads are exposed for installation of lens (1).

2. Insert housing body (5) through opening in switch box cover (10).

3. Place internal tooth lock washer (11) on housing body (5).

4. Install mounting nut (12) on housing body (5). Tighten mounting nut (12) so that rubber gasket (9) seats firmly against switch box (10).

5. Install insulation sleeving (7) on each wire (6).

6. Solder tagged wires (6) to housing terminals (8).

7. Install lamp (2) into housing body (5).

8. Make sure that rubber gasket (3) is in place against mounting collar (4) and install lens (1) on housing body (5).

4-16 TOGGLE SWITCH MAINTENANCE.

This task covers: a. Test
b. Removal
c. Installation

INITIAL SETUP

Tools

Tool Kit, General Mechanic's (item 1, appendix B)
Multimeter AN/PSM-45 (item 2, appendix B)

Equipment Conditions

Reference

Both generator sets shut down, paragraph 2-5.3.3.
Switch box cover open.

Materials/Parts

None

TEST

NOTE

The following procedures apply to all toggle switches.

Set multimeter for continuity test. Test switches in accordance with table 4-3. Replace any switch that fails test.

Table 4-3. Switch Continuity Test

	S1O TRANSFER SWITCH		S1 AND S2 ON-LINE SWITCHES	
	Closed Contact	Open Contact	Closed Contact	Open Contact
On Position	1 and 2 4 and 5		2 and 3 5 and 6	
Released Position		1 and 2 4 and 5	2 and 3	5 and 6

REMOVAL

1. Tag wires connected to terminals of switch to be replaced and remove screws (9, figure 4-16), flat washers (8), and conductor bus (7).

2. Remove hex nut (l), lock washer (2), locking ring (3), and switch 6.

INSTALLATION

1. Remove hex nut (1), lock washer (2), and locking ring (3).

2. Hand tighten hex nut (5) on switch.

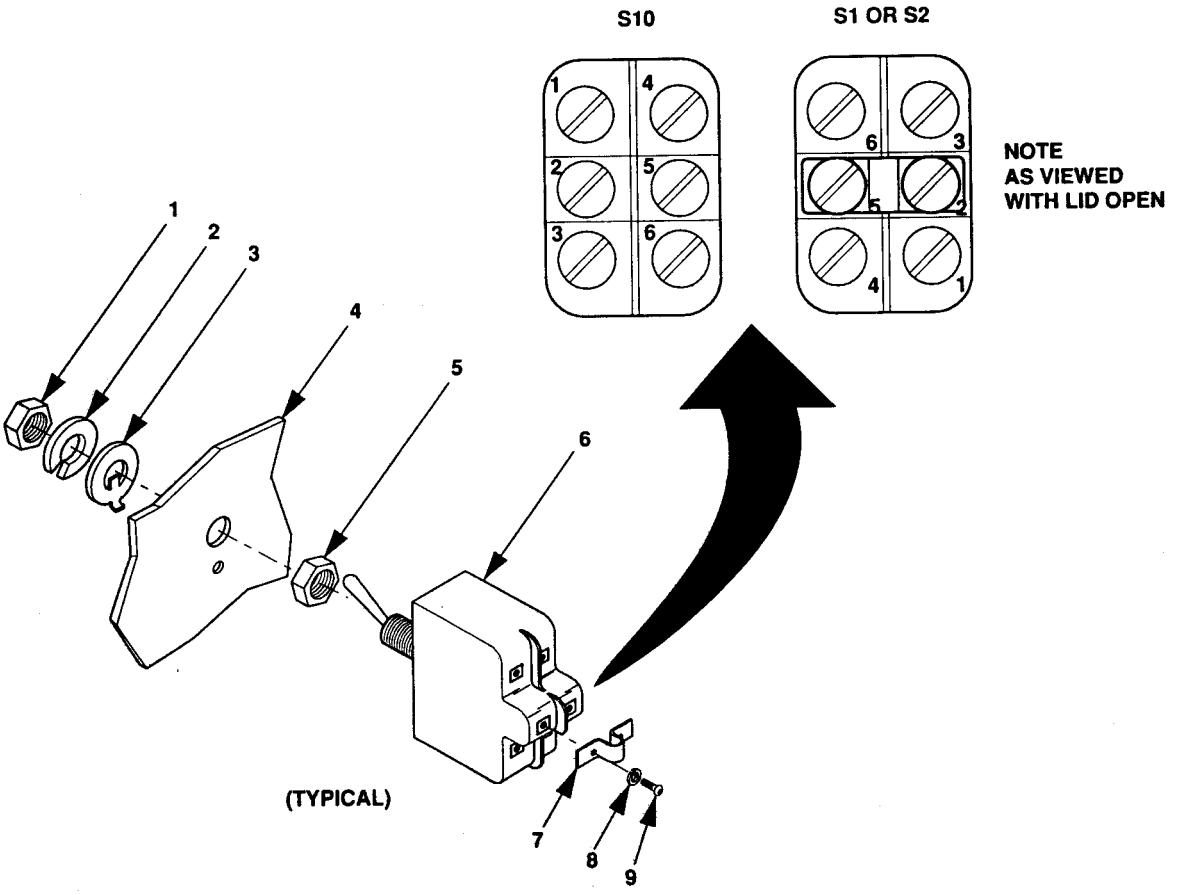

Figure 4-16. Toggle Switch.

NOTE

Make sure terminals 3 and 6 of switch S10 and 1 and 4 of switches S1 and S2 are toward the bottom as viewed with switch box open.

3. Insert switch body (6) into mounting hole and position hex nut (5) against mounting plate (4).

4. Install locking ring (3) into keyway of switch until alignment tip goes into mounting plate (4).

5. Install lock washer (2) against locking ring (3).

6. Install hex nut (1) and tighten making sure that locking ring (3) alignment is engaged in mounting plate (4).

NOTE

When installing new switch, conductor bus from old switch must be installed on new switch.

7. Remove and retain terminal screws (9) and washers (8) from terminals of new switch.

8. Install wires, conductor bus (7), washers (8), and terminal screws (9).

4-17 SWITCH BOX LOAD TERMINAL MAINTENANCE.

This task covers: a. Removal
b. Repair
c. Installation

INITIAL SETUP

Tools

Tool Kt, General Mechanic's
(item 1, appendix B)

Materials/Parts

Wire, Round Steel, 0.072 inch diameter
QQ-W-423 Composition 302

Equiument Conditions

Reference

Both generator sets shut down, paragraph 2-5.3.3. Trailer handbrakes set, front support leg/landing leg lowered, and rear leveling-support jack lowered; paragraph 2-3.2.1. Load cable discomected from switch box load terminals.

REMOVAL

1. Release clamping catches (12, figure 4-17 sheet 1) and open switch box cover (2).
2. Remove and retain hex nut (3), internal tooth lock washer (4), and leads (5) from defective terminal (8).
3. Remove and retain hex nut (6) that secures the terminal (8) to the mounting plate (7).
4. Remove terminal (8).

REPAIR

NOTE

Repair consists of replacing a missing or damaged terminal clip. Removal of terminal is not required. Any other damage to the terminal requires replacement. The terminal clip is fabricated using bulk wire National Stock Number (NSN) 9505-00-235-5071.

1. Release clamping catch (11) and open switch box load terminal cover (1).
2. Cut two pieces of bulk wire 5 3/4 inches and 1 1/4 inches long.
3. Make sure nut (9) is installed on terminal body (8).
4. Fabricate terminal clip (10) in accordance with figure 4-17 (sheet 2).
5. Install terminal clip (10) on terminal (8), close switch box terminal cover (1) and secure with clamping catch (11).

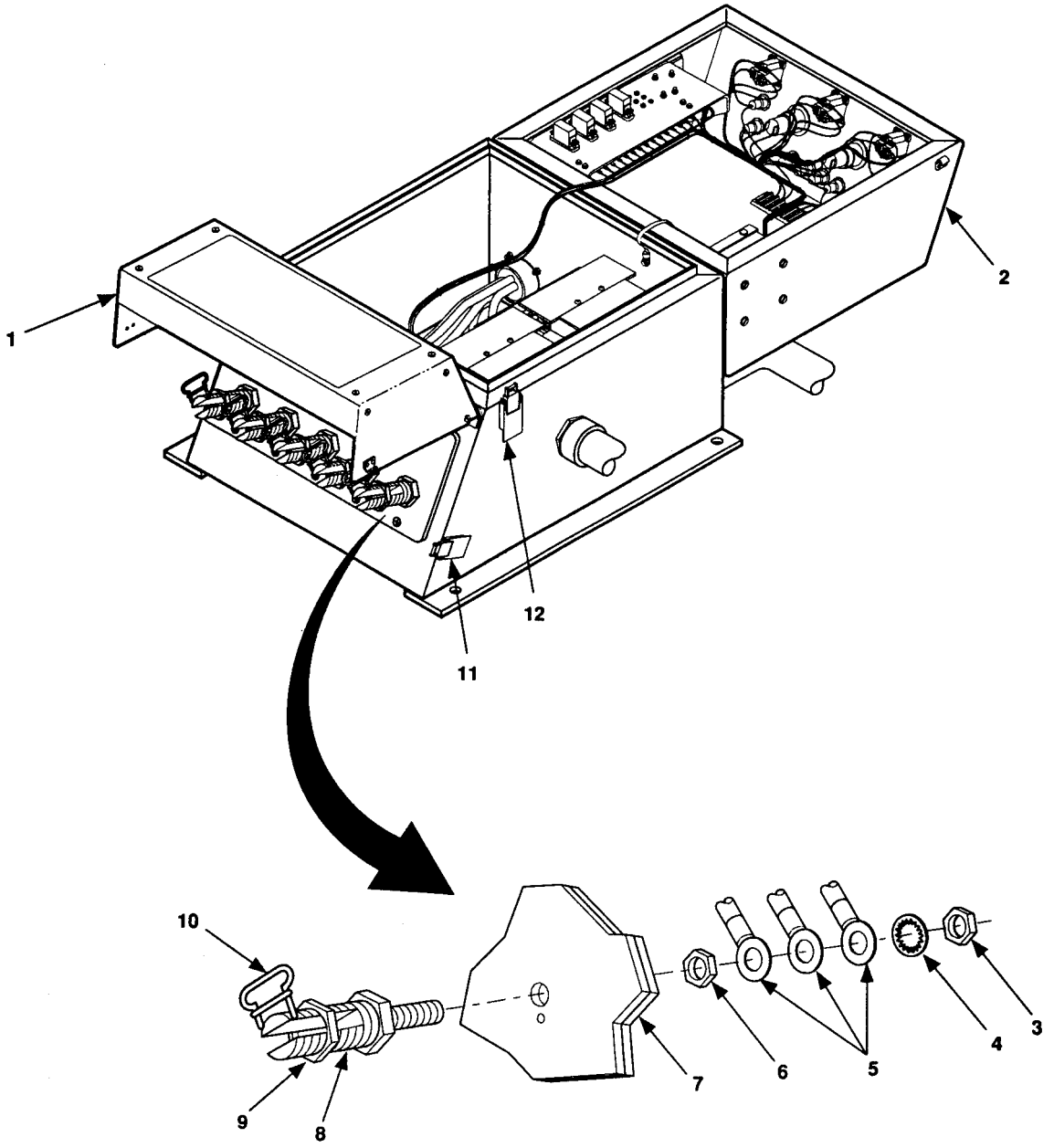

Figure 4-17. Switch Box Load Terminal Maintenance (Sheet 1 of 2).

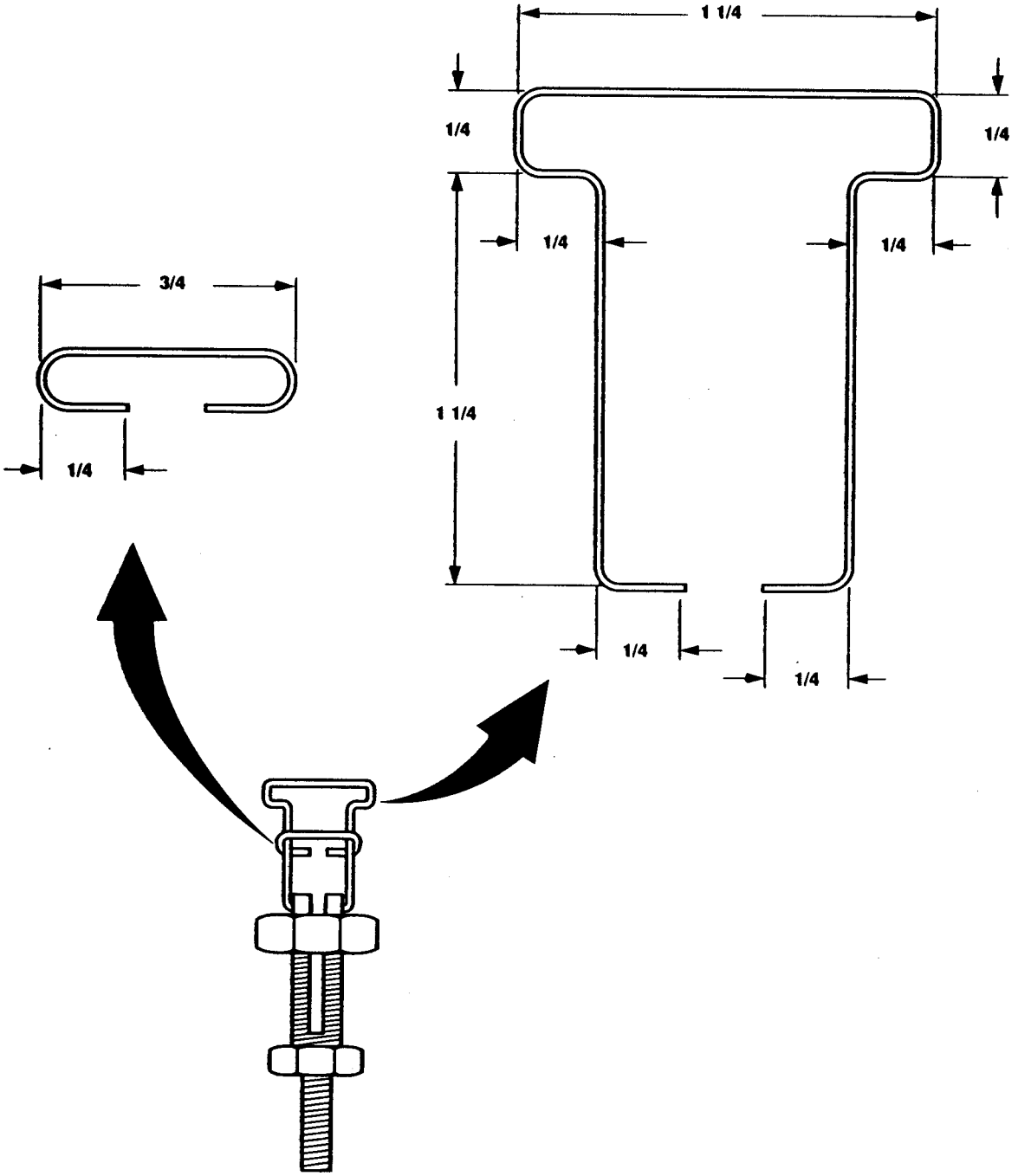

Figure 4-17. Switch Box Load Terminal Maintenance (Sheet 2).

INSTALLATION

1. Position new load terminal (8) on mounting plate so that alignment pin fits in hole provided.
2. Install and tighten the hex nut (6).
3. Install the leads (5).
4. Install internal tooth lock washer (4) and thread hex nut (3) on load terminal (8) and tighten.
5. Close switch box terminal cover (1) and switch box cover (2), and secure with clamping catches (11 and 12).

4-18 LOAD TERMINAL COVER MAINTENANCE.

This task covers: a. Removal b. Installation

INITIAL SETUP

Tools

Tool Kit, General Mechanic's (item 1, appendix B)

Materials/Parts

None

Equipment Conditions

Reference

Both generator sets shut down, para 2-5.3.3.

REMOVAL

1. Release clamping catches (1, figure 4-18) and open switch box cover (2).
2. Release clamping catches (3) and open load terminal cover (4).
3. Remove six nuts (5), lock washers (6), screws (7), and flat washers (8) and remove load terminal cover (4) and stop (9) from switch box (10).

NOTE

If replacing load terminal cover, step 4 must be performed.

4. Remove four rivets (11) and two clamping catch strikes (12). Retain strikes for installation on new cover.

INSTALLATION

1. Install load terminal cover (4) and stop (9) on switch box (10) with six screws (7), flat washers (8), lock washers (6), and nuts (5).

2. Close load terminal cover (4) and secure with clamping catches (3).

3. Close switch box cover (2) and secure with two clamping catches (1).

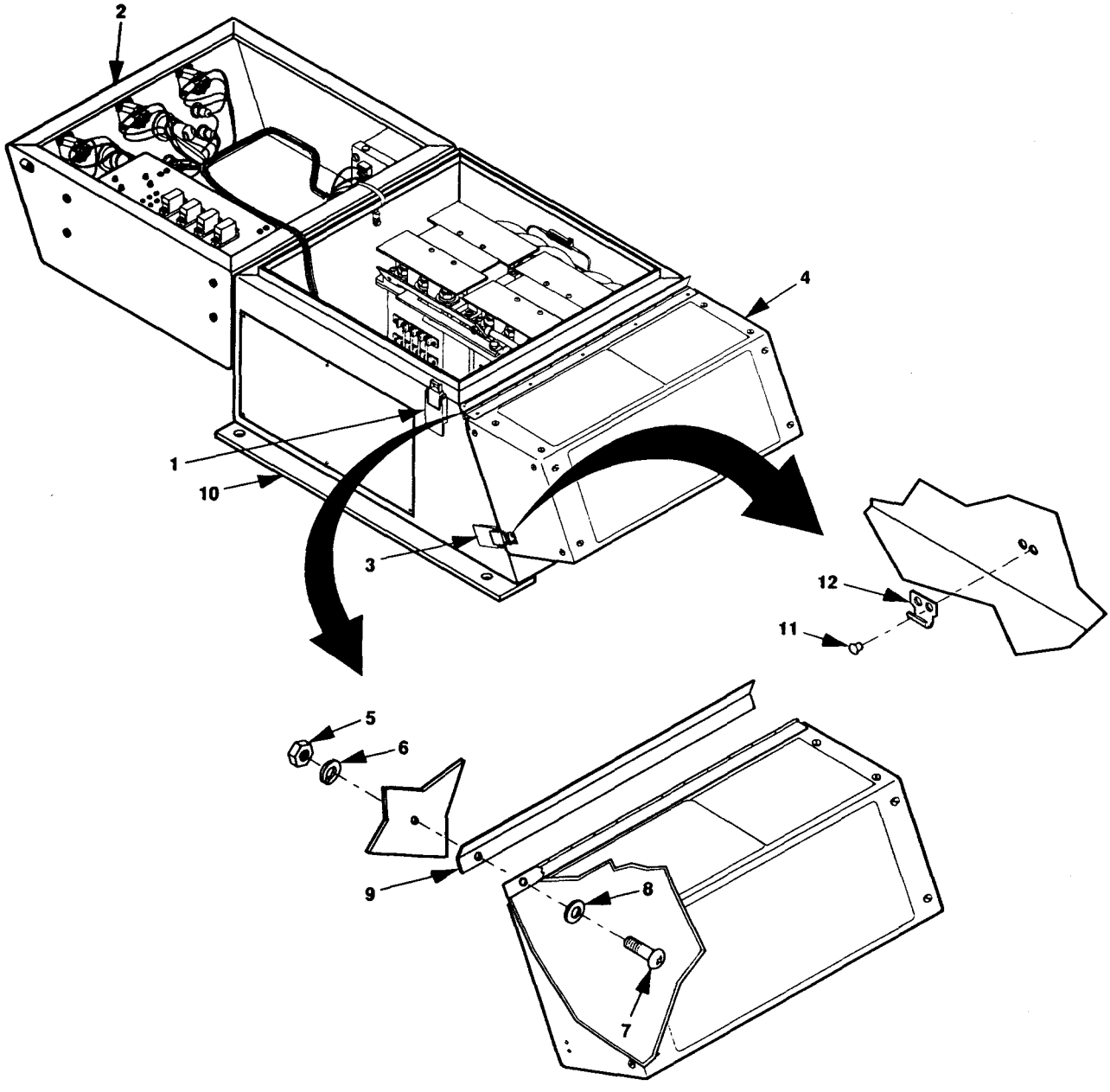

Figure 4-18. Loud Terminal Cover.

4-19 ACCESSORY BOX MAINTENANCE.

This task covers: a. Removal b. Repair c. Installation

INITIAL SETUP

Tools

Tool Kit, General Mechanic's (item 1, appendix B)
1/4-inch Drill (item 2, appendix B)
Blind Head Riveter (item 5, appendix B)

Material/Parts

Catch, Clamping and Strike
Rivets, Blind

Material/Parts - continued

Nuts, Self-locking
Hasp
Washers, Lock (item 1, appendix I)

Equipment Conditions

Reference

Trailer handbrakes set, front support leg/landing leg lowered, and rear leveling-support jack lowered; paragraph 2-3.2.1.

NOTE

Accessory box mounting hardware for AN/MJQ-35A and PU-797A (plain nuts, lock washers, flat washers, and cap screws) differs from that used on other power plants and power units, but removal and installation procedures are similar.

REMOVAL

1. Release clamping catches (4, figure 4-19) and open accessory box cover (1).

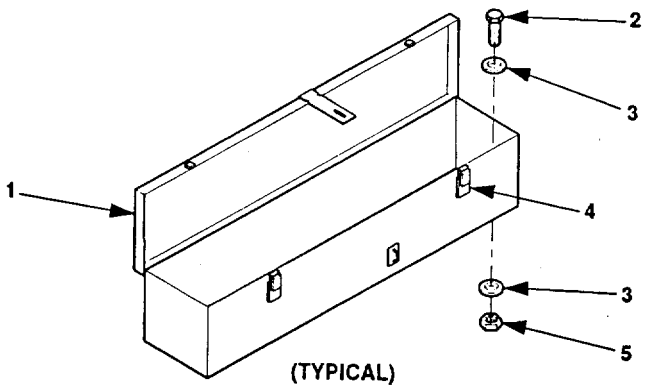

Figure 4-19. Replace Accessory Box.

2. Remove accessories from accessory box.

NOTE

AN/MJQ-35 accessory box is attached at three points. AN/MJQ-35A, AN/MJQ-36, PU-797, and PU-797A accessory box is attached at four points. The two forward mounting screws on AN/MJQ-35A and PU-797A accessory boxes are longer then the rear two.

3. Remove self-locking nuts (5), flat washers (3), machine bolts (2), and accessory box (1).

REPAIR

NOTE

Unit level maintenance of the accessory box consists of replacing clamping catches and hasp. Other repairs, such as straightening or welding, are performed at next higher level of maintenance.

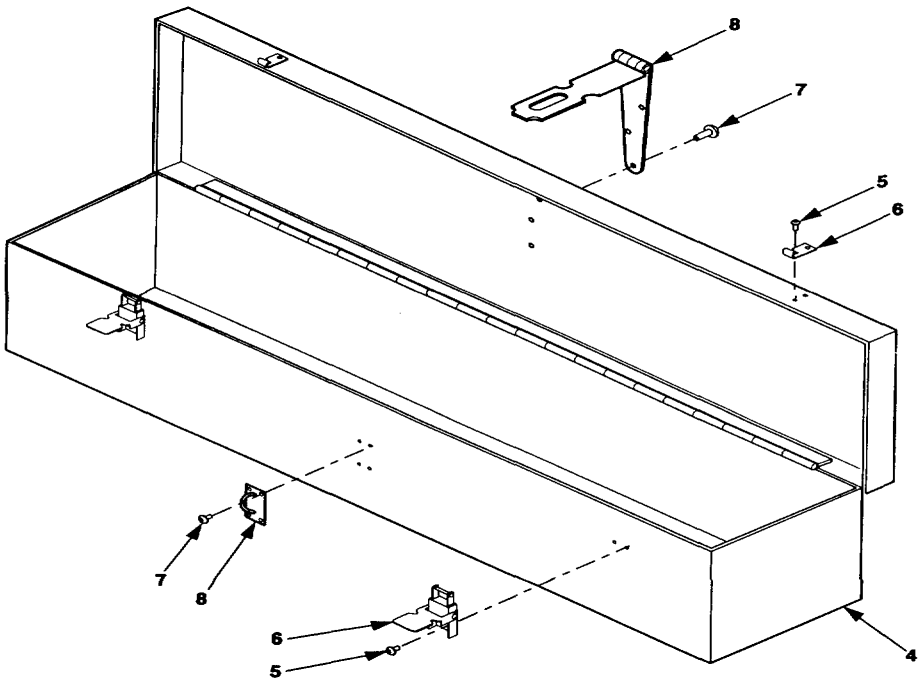

Figure 4-20. Repair Accessory Box.

1. REPLACE CLAMPING CATCH.

   a. Drill out rivets (5) that secure defective clamping catch and strike (6) to accessory box (4) and remove clamping catch and strike (6).

   b. Install new clamping catch and strike (6) on accessory box (4) and secure with rivets (5).

2. REPLACE HASP

   a. Drill out rivets (7) on hasp (8).

   b. Install new hasp (8) on accessory box (4) with rivets (7).

INSTALLATION

1. Position accessory box (1, figure 4-19) over mounting holes in trailer.

2. Install flat washers (3), machine bolts (2), and self-locking nut (5).

3. Return accessories to accessory box.

4. Close accessory box cover and secure with clamping catches (4).

4-20 FIRE EXTINGUISHER BRACKET MAINTENANCE.

This task covers: a. Removal b. Installation

INITIAL SETUP

Tools

Tool Kit, General Mechanic's
(item 1, appendix B)

Materials/Parts

Nuts, Self-locking
Washers, Lock (item 2, appendix I)

Equipment Conditions

Reference

Trailer handbrakes set, front support leg/landing leg lowered, and rear leveling-support jack lowered; paragraph 2-3.2.1.

NOTE

Fire extinguisher bracket mounting hardware for AN/MJQ-35A and PU-797A (plain nuts, lock washers, flat washers, and cap screws) differs from that used on other power units and power plants, but removal and installation procedures are similar.

REMOVAL

1. Remove fire extinguisher from bracket.

2. Remove four self-locking nuts, flat washers, cap screws, and remove fire extinguisher bracket.

INSTALLATION

1. Install fire extinguisher bracket, four cap screws, flat washers, and self-locking nuts. Tighten self-locking nuts.

2. Place fire extinguisher in bracket.

4-21 TRAILER LIFTING RING MAINTENANCE.

This task covers: a. Removal b. Installation

INITIAL SETUP

Tools

Tool Kit, General Mechanic's (item 1, appedix B)
Wrench, Torque, 800 Newton-Meter (item 2, appendix B)

Materials/Parts

Nut, Self-locking

Equipment Conditions

Reference

Trailer handbrakes set, front support Ieg/landing leg lowered, and rear leveling-support jack lowered; paragraph 2-3.2.1.

Personnel Required

Two

REMOVAL

1. Remove nut (4, figure 4-21), flat washer (3) and lifting ring (1) from lifting bracket (2); AN/MJQ-35 only.

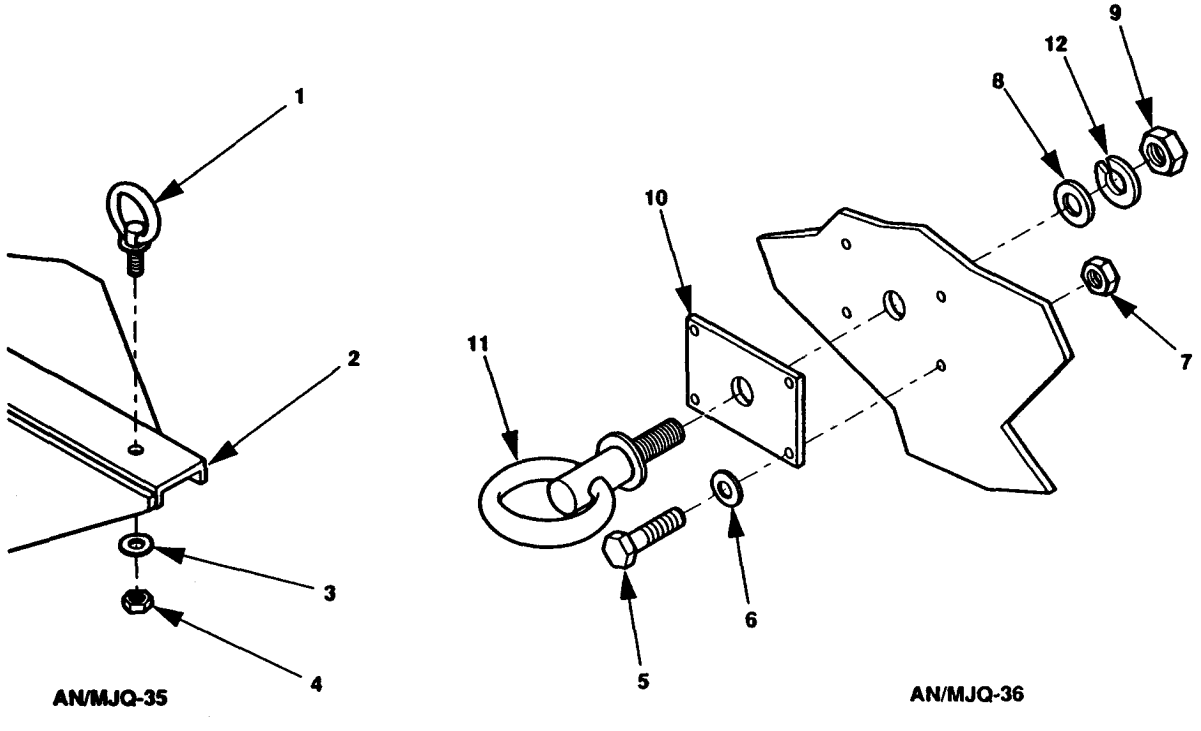

Figure 4-21. Replace Trailer Lifting Ring.

2. Remove self-locking nuts (7), flat washers (6), screws (5) and mounting plate (10); AN/MJQ-36 only.

3. Remove self-locking nut (9), lock washer (12), flat washer (8), and lifting ring (11) from mounting plate (10).

INSTALLATION

1. Install lifting ring (1), flat washer (3) and self-locking nut (4). Set ring at an angle of 35° ± 5° measured from line running from front to rear of trailer. With the aid of an assistant, torque to 315-347 lb-ft (427-470 N•m); AN/MJQ-35 only.

2. Install lifting ring (11), flat washer (8), lock washer (12), and nut (9) on mounting plate (10) and torque to 315-347 lb-ft (427-470 N•m).

3. Install mounting plate (10), screws (5), flat washers (6), and self-locking nuts (7).

4-22 DATA PLATE AND REFLECTOR MAINTENANCE.

This task covers: Replacement

INITIAL SETUP

Tools

Tool Kit, General Mechanic's (item 1, appendix B)
Drill, 1/4-inch (item 2, appendix B)
Drill, Twist, 3/16 (item 2, appendix B)
Riveter, Blind Head (item 5, appendix B)

Materials/Parts

Plate, Identification/Transportation Data
Screws, Drive
Rivets (item 3, appendix I)

Equipment Conditions

Reference

Trailer handbrakes set, front support leg/landing leg lowered, and rear leveling-support jack lowered; paragraph 2-3.2.1.

REPLACEMENT

1. REPLACE DATA PLATE.

NOTE

For AN/MJQ-35 and PU-797 data plates refer to trailer chassis TM 9-2330-202-14&P. For AN/MJQ-36 data plates refer to trailer chassis TM 9-2330-213-14&P. For AN/MJQ-35A and PU-797A data plates refer to trailer chassis TM 9-2330-392-14&P.

a. Drill out rivets (4, figures 4-21.1 and 4-22) and remove data plate (3).

b. Position data plate (3) on trailer and install rivets (4).

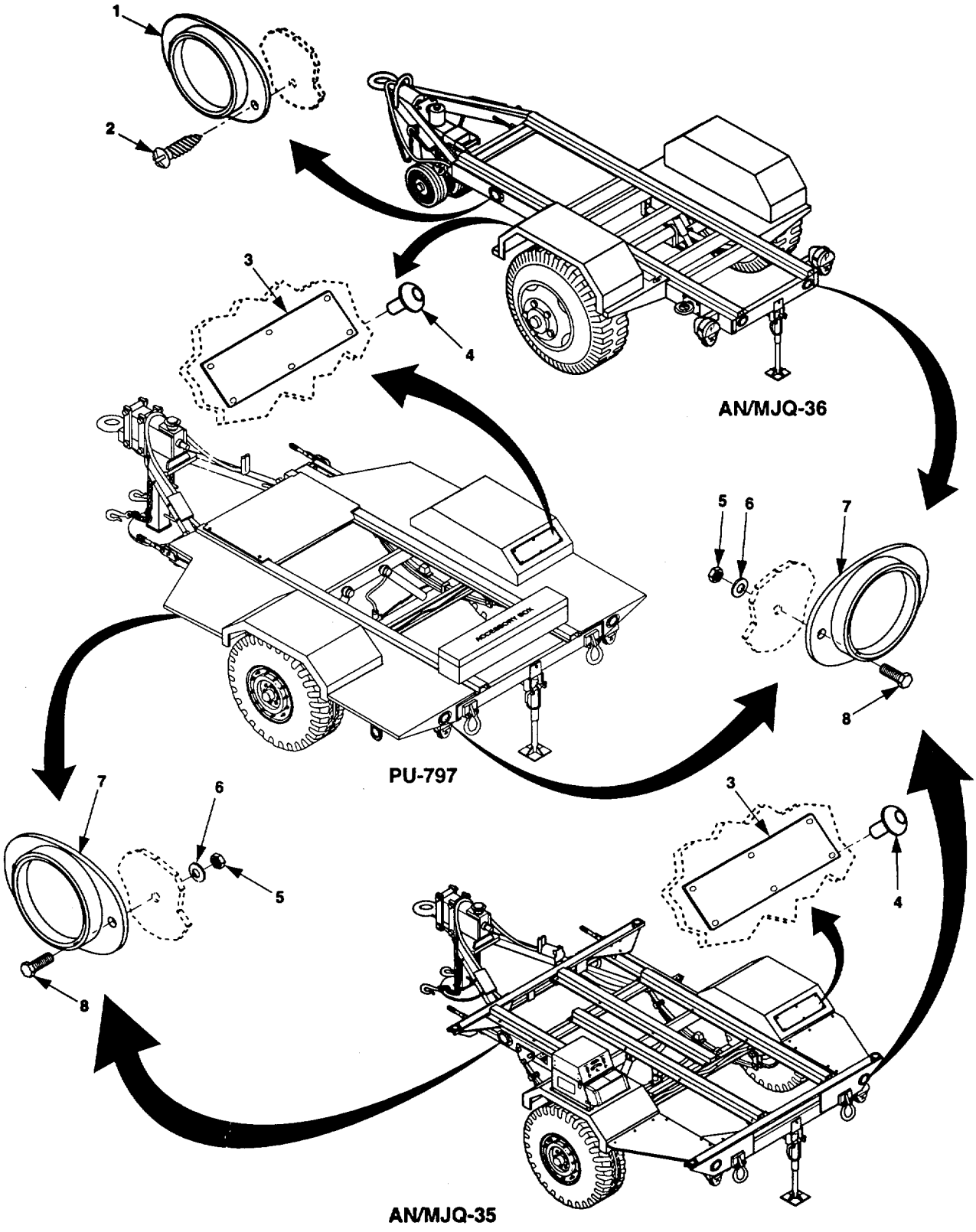

Figure 4-21.1. Identification/Transportation Data Plate and Reflector Replacement.

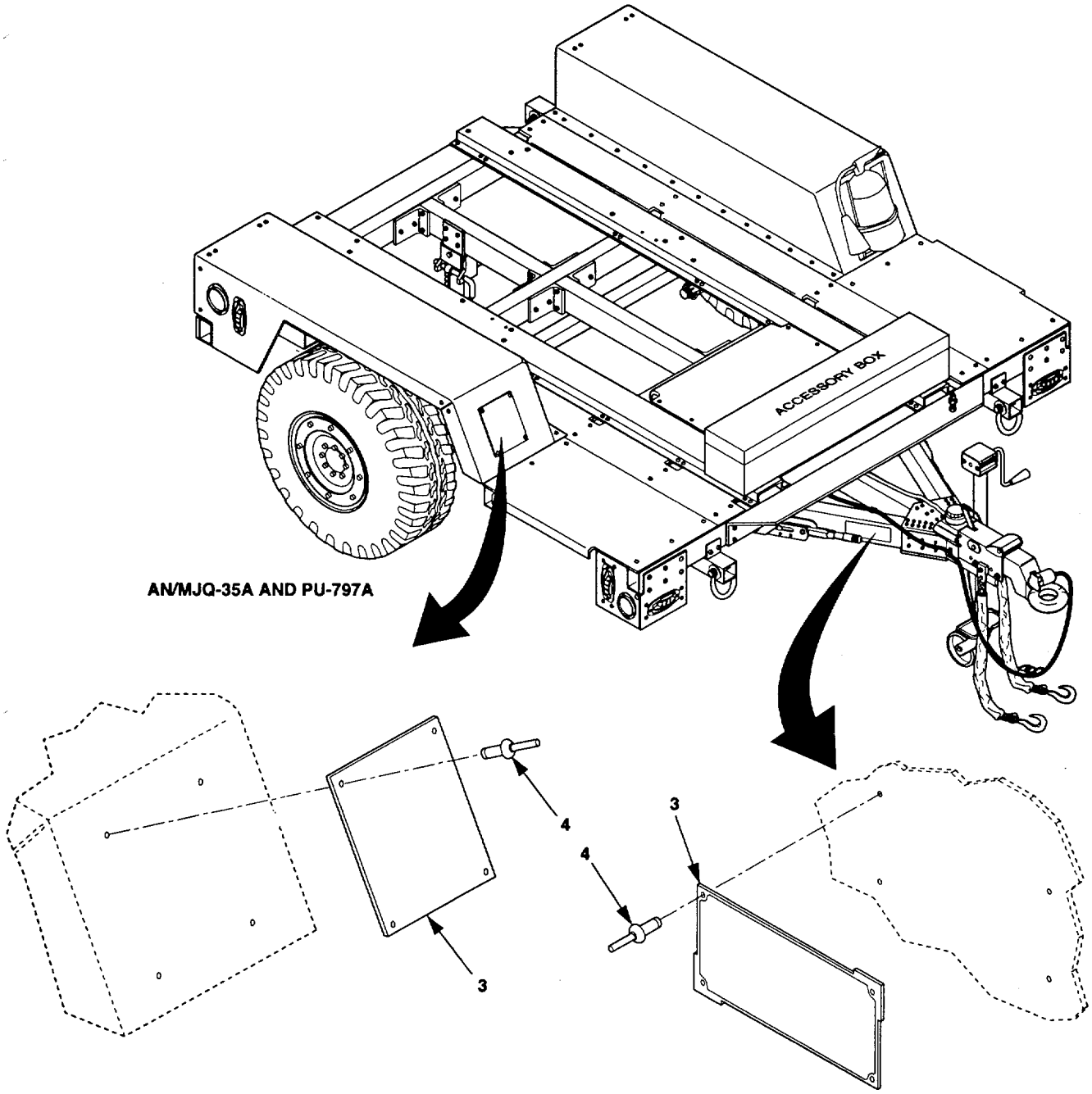

Figure 4-22. Shipping Data/identification Plate Replacement (AN/MJQ-35A and PU-797A).

2. REPLACE REFLECTORS

NOTE

Refer to TM 9-2330-392-14&P for replacement of reflectors on AN/MJQ-35A and PU-797A.

a. Remove self-locking nuts (5, figure 5-21.1), flat washers (6), screws (8), and reflector (7) from trailer (AN/MJQ-35 and PU-797, and rear of AN/MJQ-36 only).

b. Remove self-tapping screws (2) and reflector (1) from front of trailer (AN/MJQ-36 only).

c. Install reflector, (7), screws (8), flat washers (6), and self-locking nuts (5) on trailer (AN/MJQ-35 an PU-797, and rear of AN/MJQ-36 only).

d. Install reflector (1) and self-tapping screws (2) on front of trailer (AN/MJQ-36 only).

4-23 AN/MJQ-35 TRAILER SPLASH GUARD, BRACKET, AND FENDER MAINTENANCE.

This task covers: a. Removal b. Repair c. Installation

INITIAL SETUP

Tools

Tool Kit, General Mechanic's (item 1, appendix B)
Drill, 1/4-inch (item 2, appendix B)

Materials/Parts

Nuts, Self-locking
Washer, Lock, Split-ring
Covering, Deck

Equipment Conditions

Reference

Trailer handbrakes set, front support leg/landing leg lowered, and rear leveling-support jack lowered; paragraph 2-3.2.1.

Both generator sets shut down; paragraph 2-5.3.3.

Switch box assembly removed; paragraph 4-13 (roadside fender only).

REMOVAL

1. Remove wing nut (13, figure 4-23), two flat washers (14), nut (15), flat washer (16), ground cable (17), and flat washer (18).

NOTE

If replacing splash guards, ground stud and/or fire extinguisher bracket must be removed for installation on new splash guard. Perform steps 2 and/or 3. If not, proceed to step 4.

2. Remove two nuts (19), lock washers (20), internal tooth lock washers (21), and stud (23).

3. Remove fire extinguisher bracket (paragraph 4-20).

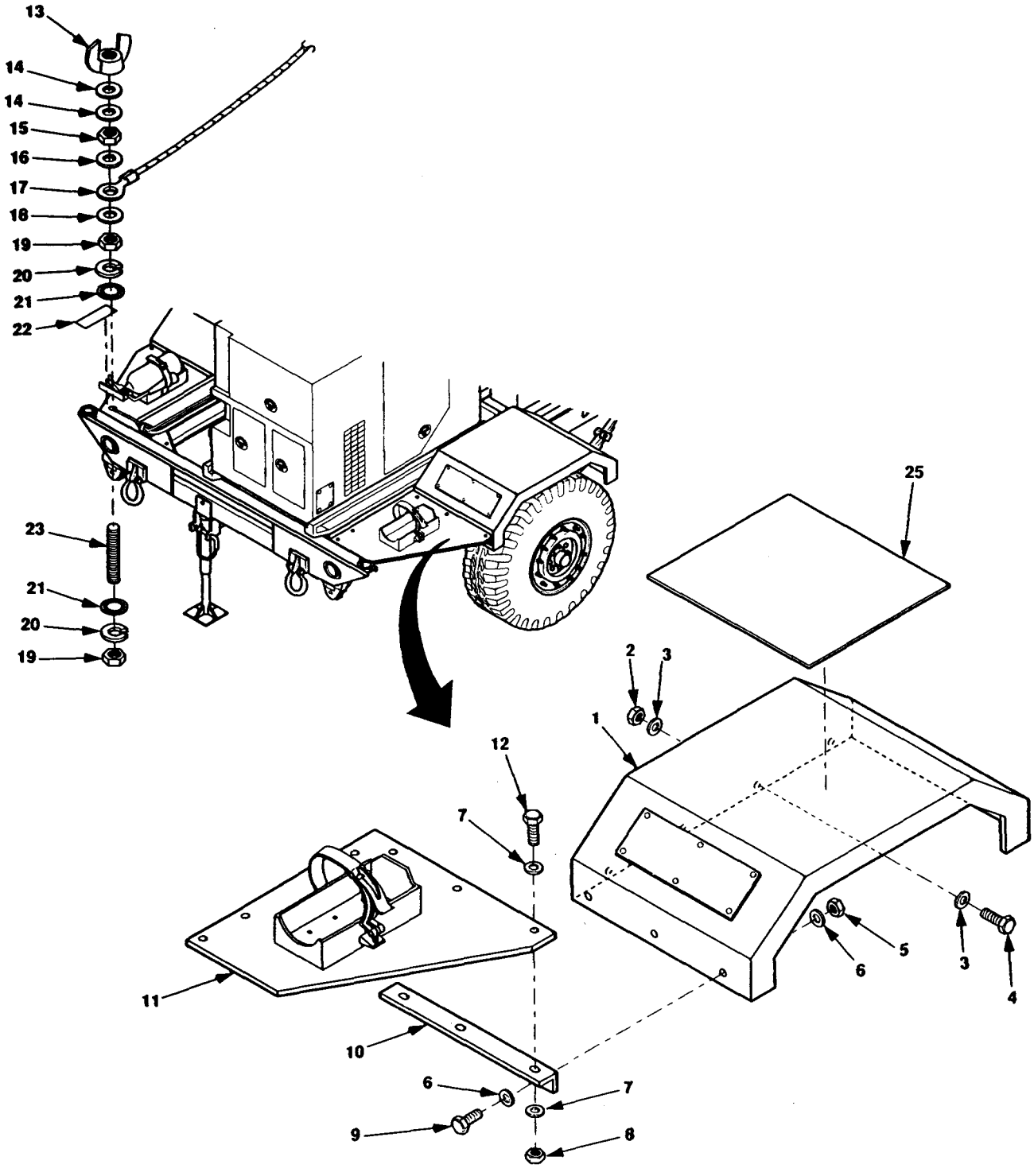

Figure 4-23. AN/MJQ-35 Splash Guard, Bracket, Ground Stud, and Fender.

NOTE

If replacing splash guards, ground stud and/or fire extinguisher bracket must be removed for installation on new splash guard. Perform steps 2 and/or 3. If not, proceed to step 4.

4. Remove data plate (paragraph 4-22).

5. Remove six self-locking nuts (8, figure 4-23), twelve flat washers (7), six cap screws (12), and splash guard (11).

6. Remove three self-locking nuts (5), six flat washers (6), three cap screws (9), and bracket (10).

7. Remove six self-locking nuts (2), 12 flat washers (3), six screws (4), and fender (1).

REPAIR

NOTE

Repair is limited to replacement of non-skid material (25). Refer to figure G6, appendix G.

INSTALLATION

1. Install fender (1) to trailer chassis using six cap screws (4), 12 flat washers (3), and six self-locking nuts (2).

NOTE

If new curbside fender is being installed, data plate removed during removal procedures must be installed. Perform step 2. If not, proceed to step 3.

2. Install data plate (paragraph 4-22).

3. Install bracket (10, figure 4-23) on fender (1) using three cap screws (9), six flat washers (6), and three self-locking nuts (5).

4. Install splash guard (11) on bracket (10) and mounting rail using six cap screws (12), 12 flat washers (7), and six self-locking nuts (8).

NOTE

If new splash guard is being installed, the ground stud and /or fire extinguisher bracket removed during removal procedures must be installed. Perform steps 5 and 6. If not, proceed to step 7.

5. Install fire extinguisher bracket (paragraph 4-20).

6. For roadside splash guard, install ground stud (23), two internal tooth lock washers (21), lock washers (20), nuts (19), and GROUND data plate (22).

7. Install flat washer (18), ground wire (17), flat washer 16), nut (15), two flat washers (14), and wing nut (13).

4-24 PU-797 AND AN/MJQ-36 TRAILER PLATFORM MAINTENANCE.

This task covers: a. Removal b. Installation

INITIAL SETUP

Tools

Tool Kit, General Mechanic's (item 1, appendix)

Materials/Parts

Nuts, Self-locking

Equipment Conditions

Reference

Trailer handbrakes set, front support leghnding leg lowered, and rear leveling-support jack lowered; paragraph 2-3.2.1.

Both generator sets shut down; paragraph 2-5.3.3.

Accessory box removed; paragraph 4-19 (AN/MJQ-36 only).

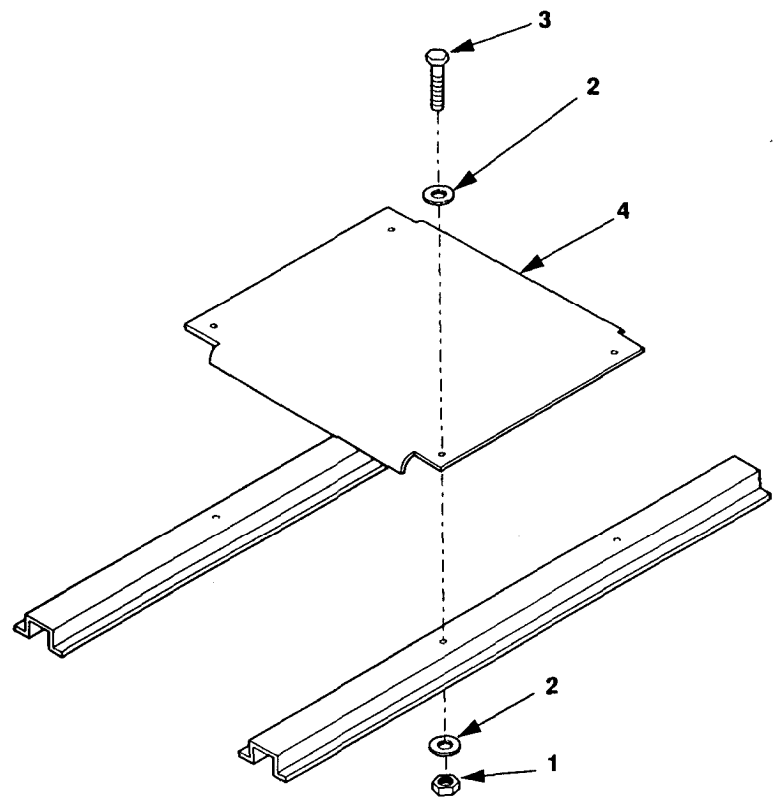

Figure 4-24. PU-797 and AN/MJQ-36 Trailor Platform.

REMOVAL

Remove four self-locking nuts (1, figure 4-24), eight flat washers (2), four screws (3), and trailer platform (4).

INSTALLATION

Install platform (4), four screws (3), eight flat washers (2), and four self-locking washers (l).

4-25 PU-797 FENDER MAINTENANCE.

This task covers: a. Removal
b. Repair
c. Installation

INITIAL SETUP

Tools

Tool Kit, General Mechanic's (item 1, appendix B)
Drill, 1/4-inch (item 2, appendix B)

Materials/Parts

Nuts, Self-locking
Washer, Lock, Split-ring
Covering, Deck

Equipment Conditions

Reference

Trailer handbrakes set, front support leg/landing leg lowered, and rear leveling-support jack lowered; paragraph 2-3.2.1.

Both generator sets shut down; paragraph 2-5.3.3.

REMOVAL

1. Remove wing nut (8, figure 4-25), two flat washers (9), nut (10), flat washer (11), ground cable (12), and flat washer (13).

NOTE

If fender is being replaced, fire extinguisher bracket, data plate, ground stud, and reflectors must be removed and retained for installation on new fender. If replacing roadside fender, perform steps 2, 3, 5, and 6. If replacing curbside fender, perform steps 4, 5, and 6.

2. Remove two nuts (14), lock washers (15), internal tooth lock washers (16), and ground stud (18).

3. Remove fire extinguisher bracket (paragraph 4-20) and reflectors (paragraph 4-22).

4. Remove data plate and reflectors (paragraph 4-22).

5. Remove ten self-locking nuts (5), twenty flat washers (4), and ten cap screws (6).

6. Remove five self-locking nuts (3), ten flat washers (2), five cap screws (1), and fender (7).

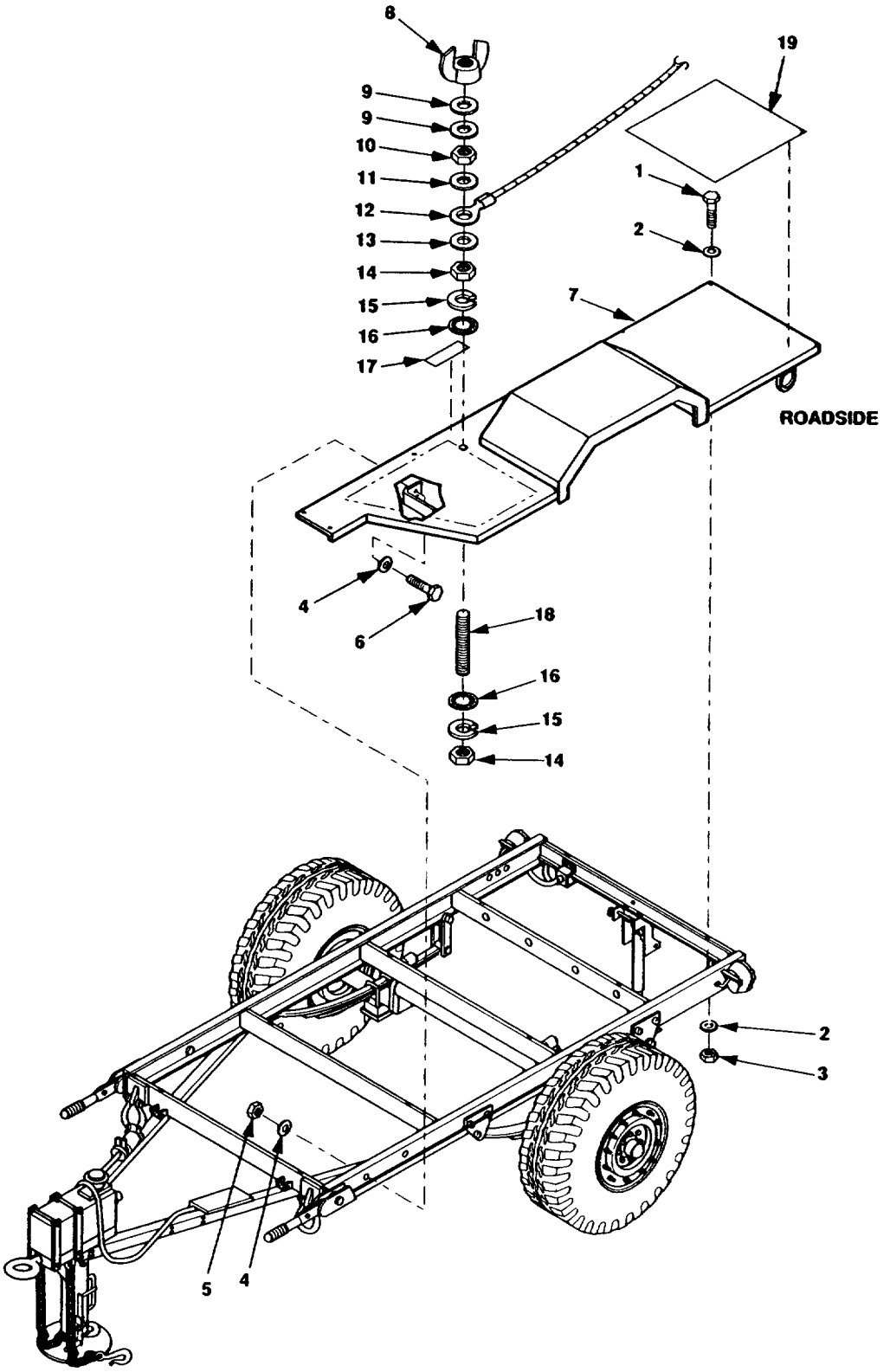

Figure 4-25. PU-797 Fender.

REPAIR

NOTE

Repair is limited to replacement of deck covering (19). Refer to figure G6, appending G.

INSTALLATION

1. Position fender (7, figure 4-25) on trailer chassis and loosely install five cap screws (1), ten flat washers (2), and five self-locking nuts (3).

2. Install and tighten ten cap screws (6), twenty flat washers (4), and ten self-locking nuts (5).

3. Tighten five self-locking nuts (3).

NOTE

If new fender(s) are being installed, fire extinguisher bracket, data plate, ground stud, and reflectors removed during removal procedures must be installed. If replacing roadside fender, perform steps 4, 5, and 6. If not, proceed to step 8. If replacing curbside fender, perform steps 6 and 7.

4. Install fire extinguisher bracket (paragraph 4-20).

5. Install ground stud (18), two internal tooth lock washers (16), lock washers (15), nuts (14), and ground data plate (17).

6. Install reflectors (paragraph 422).

7. Install data plates (paragraph 4-22).

8. Install flat washer (13), ground wire (12), flat washer (11), nut (10), two flat washers (9), and wing nut (8).

4-26 AN/MJQ-36 FENDER MAINTENANCE.

This task covers: a. Removal
b. Repair
c. Installation

INITIAL SETUP

Tools

Tool Kit, General Mechanic's (item 1, appendix B)
Drill, 1/4-inch (item 2, appendix B)

Materials/Parts

Nuts, Self-locking
Covering, Deck

Equipment Conditions

Reference

Trailer handbrakes set, front support leg/kmding leg lowered, and rear leveling-support jack lowered; paragraph 2-3.2.1.

Switch box removed (only if roadside fender is being replaced); paragraph 4-13.

Personnel Required

Two

REMOVAL

1. Remove wing nut (9, figure 4-26), two flat washers (10), nut (11), flat washer (12), ground cable (13), and flat washer (14).

NOTE

If fender is being replaced, fire extinguisher bracket and/or ground stud and data plate must be removed and retained for installation on new fender. If replacing roadside fender, perform steps 2, 3, 4, 5, and 6. If replacing curbside fender, perform steps 3,5, and 6.

2. Remove two nuts (15), lock washers (16), internal tooth lock washers (17), and ground stud (19).

3. Remove fire extinguisher bracket (paragraph 4-20).

4. Remove data plate (paragraph 4-22),

5. Remove four self-locking nuts (1), eight flat washers (2), and four cap screws (3).

6. Remove five self-locking nuts (4), ten flat washers (5), five cap screws (6), and fender (7).

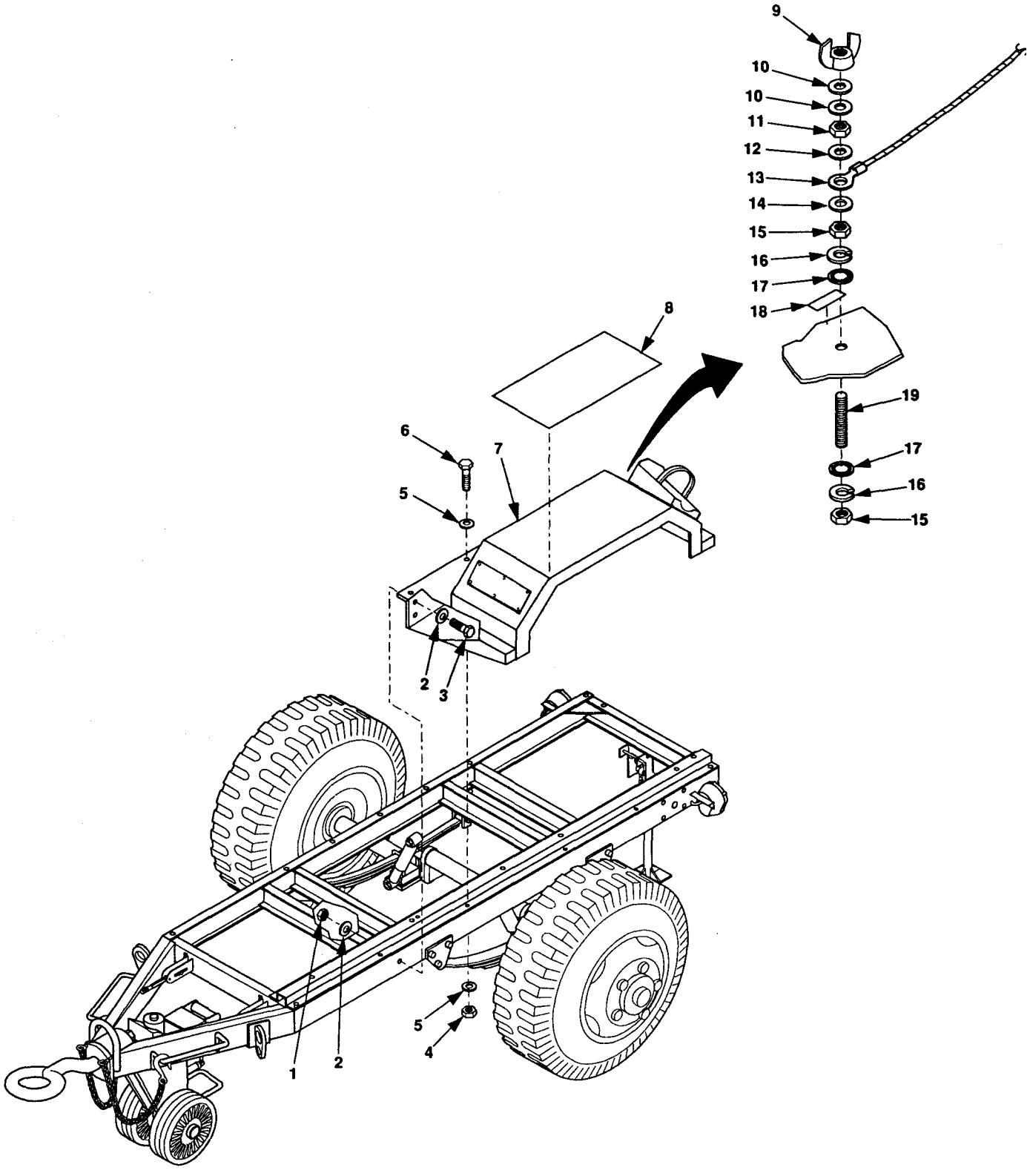

Figure 4-26. AN/MJQ-36 Fender.

REPAIR

NOTE

Repair is limited to replacement of deck covering (8). Refer to figure G-6, appendix G).

INSTALLATION

1. Loosely install fender (7, figure 4-26), five screws (6), ten flat washers (5), and five self-locking nuts (4).

2. Install and tighten four cap screws (3), eight flat washers (2), and four self-locking nuts (l).

3. Tighten five self-locking nuts (4).

NOTE

If replacing fender(s), fire extinguisher bracket, ador data plate, and ground stud removed during removal procedures must be reinstalled. If replacing roadside fender, perform steps 4, 5, 6 and 7. If replacing curbside fender, perform step 4.

4. Install fire dinguisher bracket (paragraph 4-20).

5. Install data plate (paragraph 4-22).

6. Install ground stud (19), two internal tooth lock washers (17), lock washers (16), nuts (15), and ground data plate (18).

7. Install flat washer (14), ground wire (13), flat washer (12), nut (11), two flat washers (10), and wing nut (9).

4-27 1 TON TRAILER REAR LEVELING-SUPPORT JACK MAINTENANCE.

This task covers: a. Removal
b. Repair
c. Installation

INITIAL SETUP

Tools

Tool Kit, General Mechanic's (item 1, appendix B)
Jack Stand (item 2, appendix B)
Vise (item 2, appendix B)

Materials/Parts

Pin, Cotter
Nut Self-locking, General Purpose
Pin, Spring
Fitting, Lubrication (if needed)
Grease, GAA (item 2, Appendix E)

Equipment Conditions

Reference

Trailer handbrakes set and front support leg/landing leg lowered; paragraph 2-3.2.1.

Both generator sets shut down; paragraph 2-5.3.3

REMOVAL

WARNING

Before removing trailer leveling-support jack, support rear of trailer with jack stands. Failure to observe this warning can cause severe personal injury or death.

1. Support rear of trailer with jack stands.
2. Turn leg base (11, figure 4-27) to take weight off leg prop.
3. Remove either one of two cotter pins (16 or 6) from pivot shaft (15) and discard.
4. Hold leg base (11) steady and remove pivot shaft (15) with remaining cotter pin (16 or 6) in place.
5. Lift leg base (11) slightly to take weight off retaining pin (10) and remove retaining pin (10). Move leg base (11) and attached parts out of bracket (7).
6. Remove two self-locking nuts (4), four flat washers (5 and 8), and two cap screws (9).
7. Remove self-locking nut (3), two flat washers (2 and 14), and cap screw (13). Remove bracket (7) from trailer chassis (1).

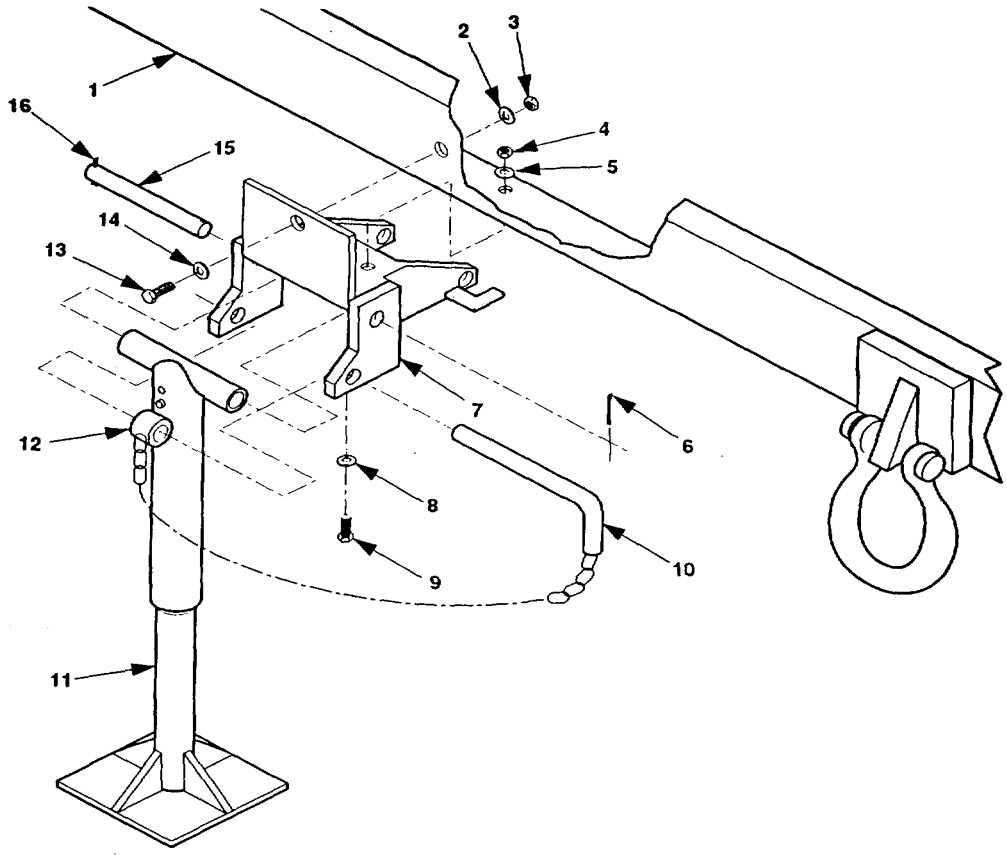

Figure 4-27. Rear Leveling-Support Jack Replacement, 1 Ton Trailer.

REPAIR

WARNING

Before removing trailer rear leveling-support jack, support rear of trailer with jack stands. Failure to observe this *WARNING* can cause severe personal injury or death.

NOTE

Disassemble the trailer rear leveling-support jack only to the extent necessary to replace worn, defective, or damaged parts.

1. Disassemble trailer rear leveling-support jack.

   a. Clamp leg assembly in a vise with spring pin (2, Figure 4-27) facing up.

   b. Drive the spring pin (2) out of upper leg (1) and remove leg base (4).

   c. If defective, remove lubrication fitting (3).

   d. Inspect upper leg (1) and leg base (4) for damage. If either needs to be replaced, replace entire trailer rear leveling-support jack.

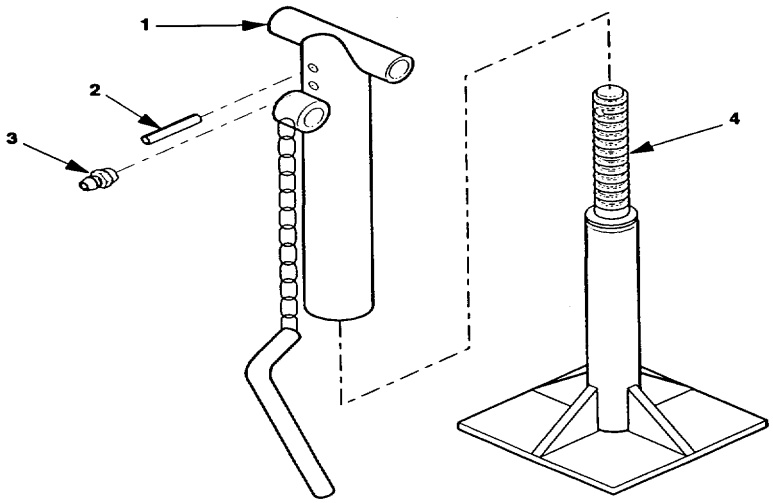

Figure 4-28. Rear Leveling-Support Jack Repair, 1 Ton Trailer.

2. Assemble trailer rear leveling-support jack.

   a. If removed in disassembly, install lubrication fitting (3).

   b. Clamp upper leg (1) in a vise with spring pin hole facing up.

   c. Insert leg base (4), align hole and install a new spring pin (2).

INSTALLATION

WARNING

Before removing trailer rear leveling-support jack, support rear of trailer with jack stands. Failure to observe this *WARNING* can cause severe personal injury or death.

1. Install bracket (7, figure 4-27) on trailer chassis (1), with flat washer (14) and cap screw (13), through mounting hole in bracket (7) on trailer chassis (1).

2. Install flat washer (2) and a new self-locking nut (3) on cap screw (13).

3. Install cap screws (9), flat washers (8 and 5), and new self-locking nuts (4).

4. Position leg base (11) and attached parts in bracket (7) and install retaining pin (10).

5. Position leg base (11) and install pivot shaft (15).

6. Install new cotter pin (16 or 6) in pivot shaft (15).

7. Lube rear leveling-support jack.

4-28 PU-797A AND AN/MJQ-35A GROUND STUD REPLACEMENT.

This task covers: a. Removal b. Installation

INITIAL SETUP

Tools

Tool Kit, General Mechanic's
(item 1, appendix B)

Materials/Parts

Washer, Lock (item 4, appendix I)

Equipment Conditions

Reference

Trailer handbrakes set and front support leg/landing leg lowered; paragraph 2-3.2.1.

Both generator sets shut down; paragraph 2-5.3.3

REMOVAL

NOTE

Figure 2-8 contains location of ground stud.

1. Loosen nut (1, figure 4-29) and remove ground wire (2) from ground stud (3).
2. Remove nut (4), lock washer (5), flat washer (6), and ground stud(3).

INSTALLATION

1. Install ground stud (3), flat washer (6), lock washer (5), and nut (4). Tighten nut (4).
2. Install ground wire (2) in slot of ground stud (3) and tighten nut (1).

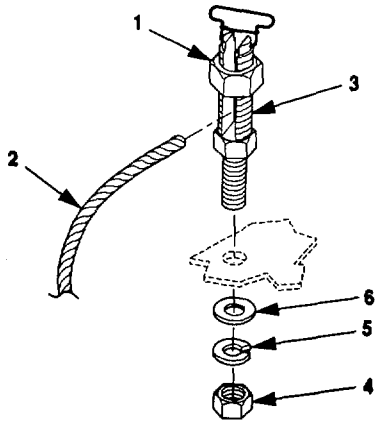

Figure 4-29. PU-797A and AN/MJQ-35A Ground Stud Replacement.

Section VII. ADMINISTRATIVE STORAGE

4-28 ADMINISTRATIVE STORAGE.

4-28.1 Short Term Storage. This type of storage is used when the power plant/power unit is expected to be stored from 1 to 45 days. The storage may be at destination after domestic shipment, or may be administrative storage when there is a shortage of maintenance manpower. For administrative storage:

a. Perform current maintenance services and serviceability criteria evaluations before placing power plant/power unit in administrative storage. Correct shortcomings and deficiencies and check that all modification work orders have been applied.

b. If possible, select an inside storage site. If inside storage is not available, a truck, van, conex container, or other container may be used.

c. When in administrative storage, the power plant/power unit should be capable of being made mission ready within 24 hours unless a different time frame is directed by the approving authority.

4-28.2 Intermediate Term Storage. This type of storage is used when the power plant/power unit is expected to be stored from 45 to 180 days.

4-28.3 Long Term Storage. This type of storage is used when the power plant/power unit is expected to be stored for more than 180 days.

CHAPTER 5

DIRECT SUPPORT MAINTENANCE

Subject Index Page

Section I. REPAIR PARTS; SPECIAL TOOLS; TEST, MEASUREMENT, AND DIAGNOSTIC EQUIPMENT (TMDE); AND SUPPORT EQUIPMENT

5-1 COMMON TOOLS AND EQUIPMENT.

For authorized common tools and equipment refer to the Modified Table of Organization and Equipment MTOE) applicable to your unit.

5-2 SPECIAL TOOLS, TMDE, AND SUPPORT EQUIPMENT.

Refer to generator set TM 9-6115-641-24P, engine TM 9-2815-252-24P, 1-ton trailer TM 9-2330-202-14&P, high mobility trailer TM 9-2330-392-14&P, and 1 1/2 ton trailer TM 9-2330-213-14&P.

5-3 REPAIR PARTS.

5-3.1 Generator Set Repair Parts. Refer to generator set TM 9-6115-641-24P and engine M 9-2815-252-24P.

5-3.2 Trailer Repair Parts. Refer to TM 9-2330-202-14&P for Power Plant AN/MJQ-35 and Power Unit PU-797, TM 9-2330-213-14&P for Power Plant AN/MJQ-36, and TM 9-2330-392-14&P for Power Plant AN/MJQ-35A and Power Unit PU-797A-

5-3.3 Power Plant/Power Unit Repair Parts. Power Plant/Power Unit repair parts not covered in the generator, engine, or trailer RPSTL are listed and illustrated in Appendix F.

Section II. TROUBLESHOOTING

5-4 GENERAL.

Paragraph 5-4.3 covers troubleshooting procedures for components unique to the power plant/power unit. Refer to the applicable generator set or trailer technical manual, as listed below, for generator and trailer troubleshooting procedures.

5-4.1 **Generator Set Troubleshooting**. Refer to TM 9-6115-641-24 and TM 9-2815-252-24.

5-4.2 **Trailer Troubleshooting**. Refer to TM 9-2330-202-14&P for Power Plant AN/MJQ-35 and Power Unit PU-797, TM 9-2330-213-14&P for Power Plant AN/MJQ-36, and TM 9-2330-392-14&P for Power Plant AN/MJQ-35A and Power Unit PU-797A.

5-4.3 **Power Plant Troubleshooting**. The following symptom index contains troubleshooting information for locating and correcting operating troubles that may develop in components unique to the power plant end item. The symptom index lists malfunctions associated with switch box operation. Each malfunction listing includes a reference to the applicable figure that contains a chart. The chart will help you determine probable causes and corrective actions to take. The symptom index cannot list all malfunctions that may occur, nor all tests or inspections and corrective actions. If a malfunction is not listed or cannot be corrected by listed corrective actions, notify next higher level of maintenance.

NOTE

PRIOR TO THE USE OF ANY OF THE FOLLOWING PROCEDURES, BE SURE THE SWITCH BOX IS PROPERLY WIRED TO THE GENERATORS LOAD TERMINALS. FAILURE TO DO SO WILL GIVE MISLEADING RESULTS.

SYMPTOM INDEX

WARNING

SHUT DOWN GENERATOR SETS BEFORE PERFORMING INTERNAL INSPECTION OF SWITCH BOX. FAILURE TO OBSERVE THIS WARNING COULD RESULT IN SEVERE PERSONAL INJURY OR DEATH.

↓

GEN SET 1 - TEST FOR CONTINUITY BETWEEN TB2-1 AND K1-Y, K1-Y AND L0, AND TB2-2 AND K1-A2.

GEN SET 2 - TEST FOR CONTINUITY BETWEEN TB2-4 AND K2-Y, K2-Y AND L0, AND TB2-5 AND K2-A2

↓ NOT OK

REPAIR OR REPLACE ANY WIRE WHICH FAILS TO SHOW CONTINUITY

Figure 5-1. ON Indicator Lamp Assembly Tests Good, But On Indicator Lamp Fails To Light With Generator Set Running.

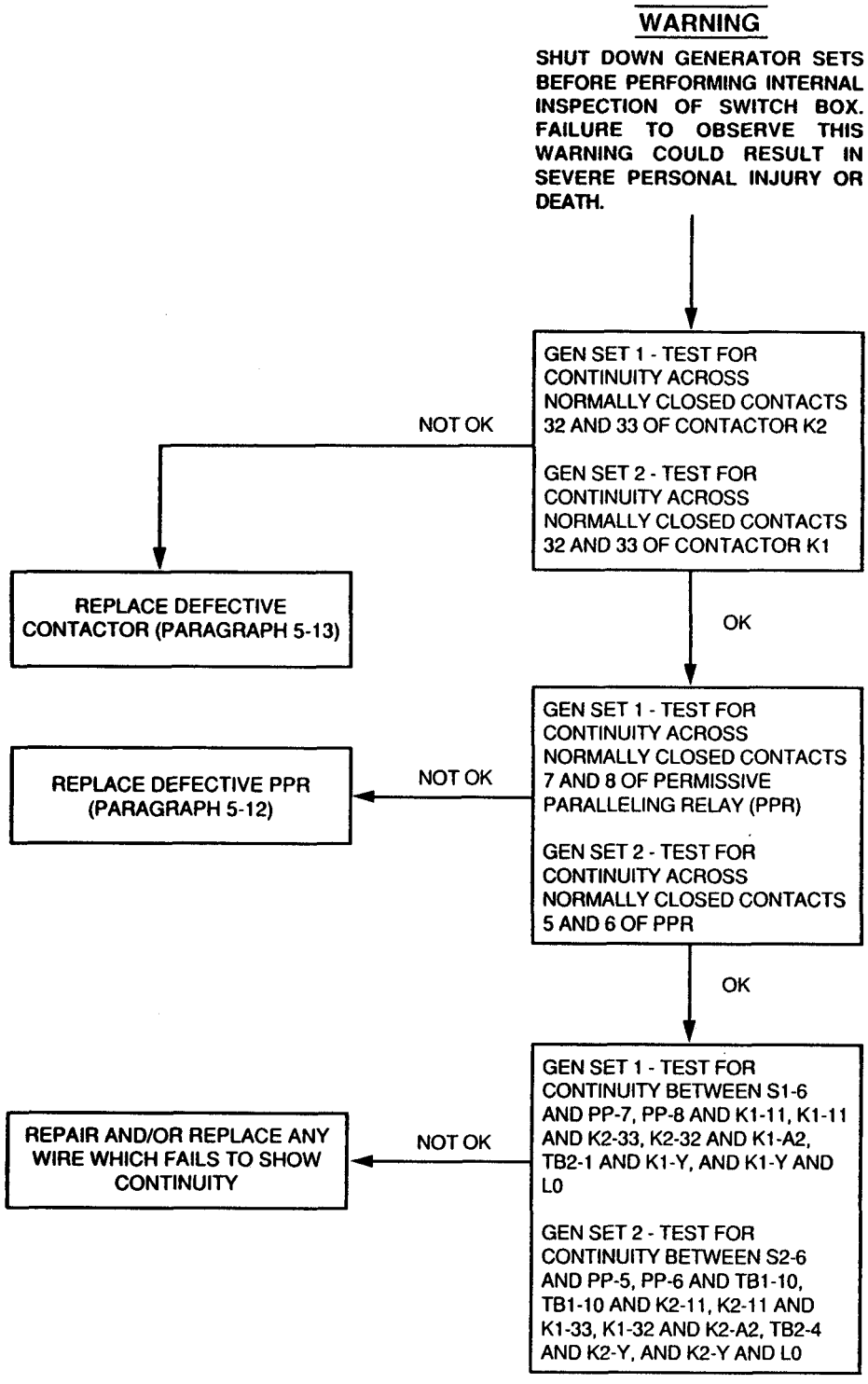

Figure 5-2. ON-LINE Indicator Lamp Assembly And ON/OFF Switch Serviceable, But ON-LINE Indicator Lamp Fails To Light When ON/OFF Switch Is Placed IN ON Position.

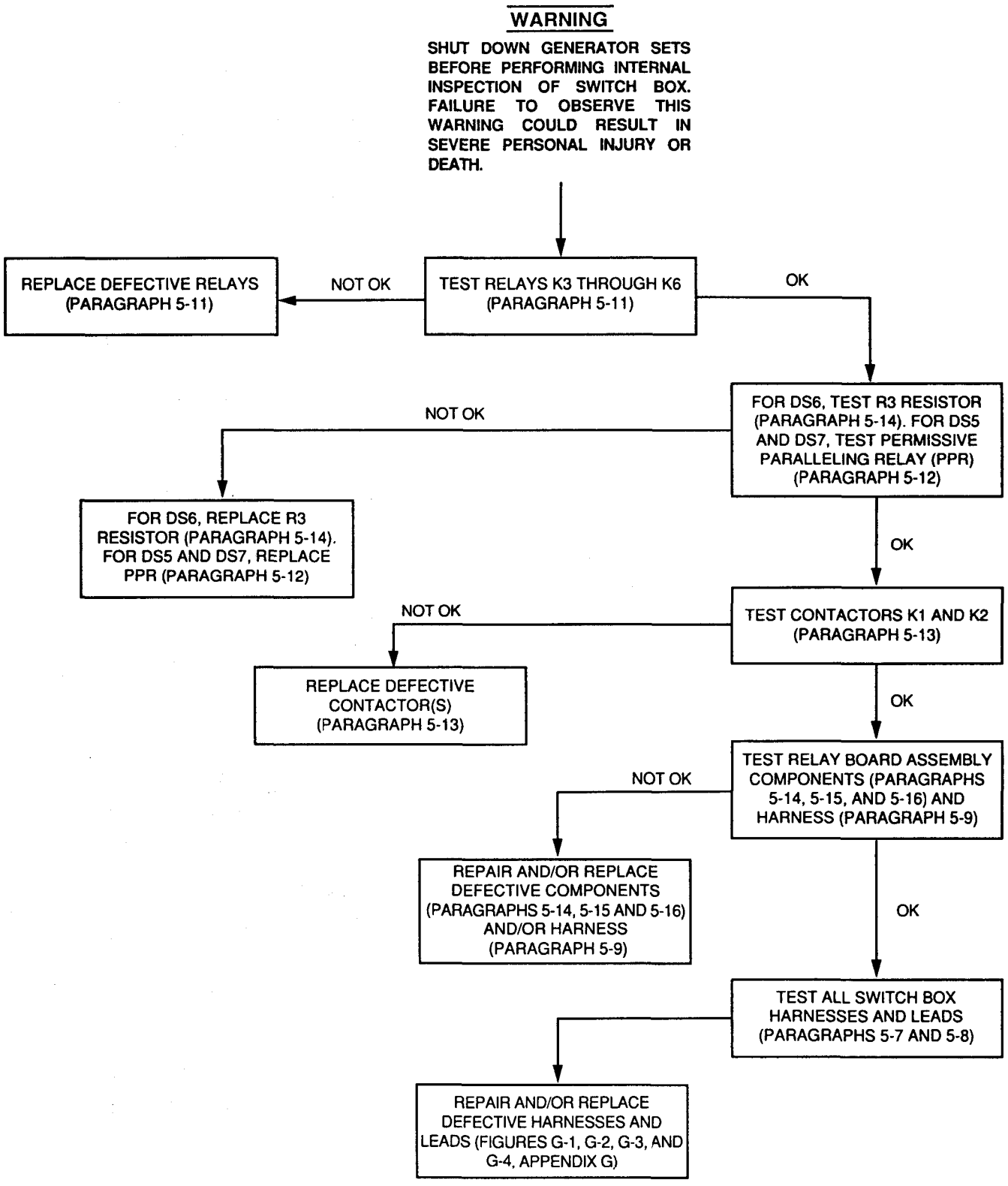

Figure 5-3. SYNCHRONIZINGING Indicator Lamps And Transfer Switch Serviceable, But SYNCHRONIZING Indicator Lamps Fail To Light When TRANSFER Switch Is Closed And Then Released.

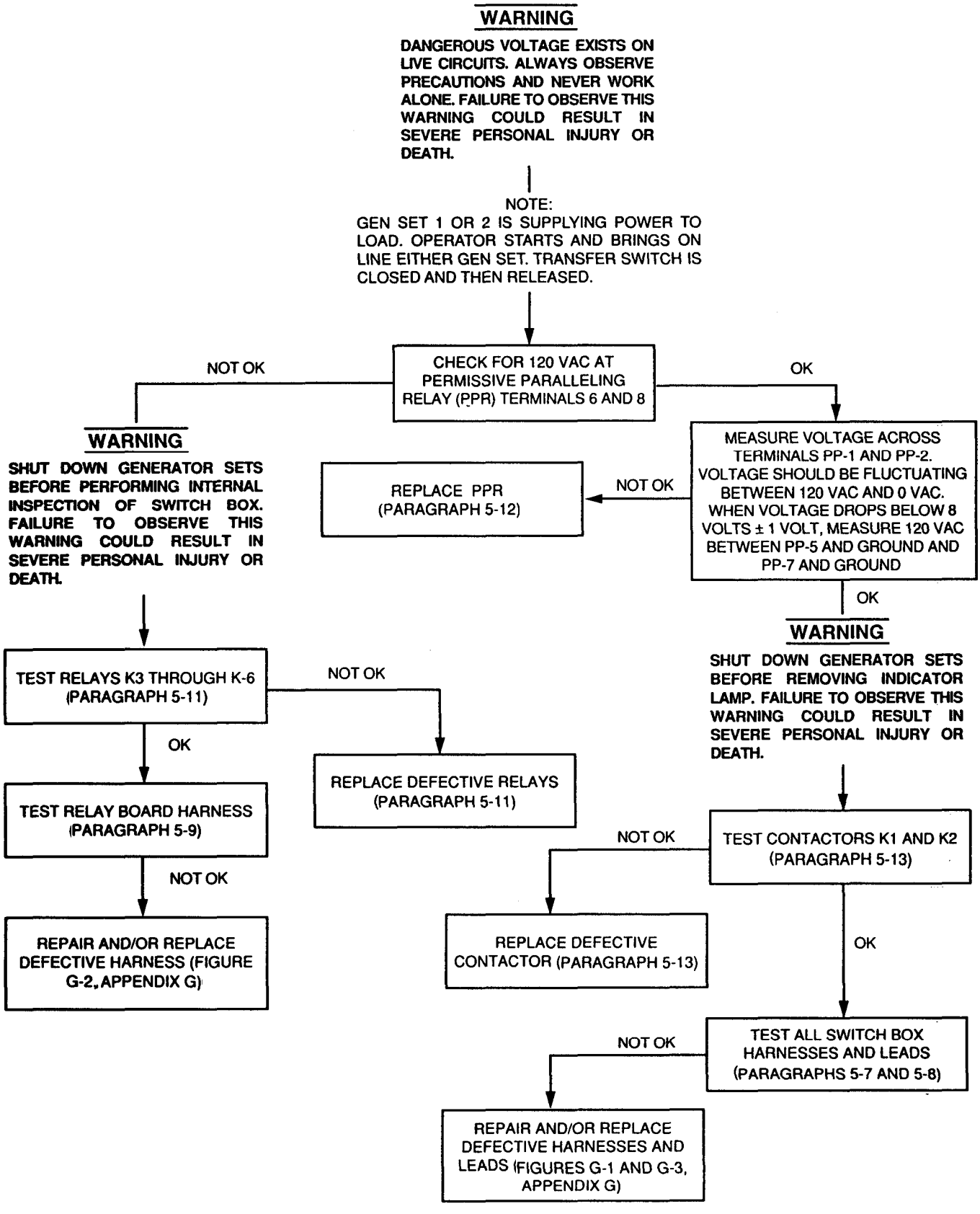

Figure 5-4. All Indicator Lamps Working Property, But Load Will Not Transfer.

Section III. MAINTENANCE PROCEDURES

5-5 GENERAL.

This section covers Direct Support level maintenance procedures for power plant/power unit components that are not covered in the generator set technical manual, engine technical manual, or trailer technical manuals.

5-5.1 **Generator Set Maintenance**. Refer to generator set TM 9-6115-641-24 and engine TM 9-2815-252-24.

5-5.2 **Trailer Chassis Maintenance**. Refer to TM 9-2330-202-14&P for Power Plant AN/MJQ-35 and Power Unit PU-797, TM 9-2330-392-14&P for Power Plant AN/MJQ-35A and Power Unit PU-797A, and TM 9-2330-213-14&P for Power Plant AN/MJQ-36.

5-6 GENERATOR SET MAINTENANCE.

This task covers: a. Removal b. Installation

INITIAL SETUP

Tools

Tool Kit, General Mechanic's
(item 1, appendix B)
Torque Wrench, 0-150 ft-lb
(item 3, appendix B)
Lifting Device, 1750 lbs. lifting capacity
(item 3, appendix B)

Materials/Parts

Nuts, Self-locking
Washers, Lock (item 5, appendix I)

Equipment Conditions

Reference

Both generator sets shut down; paragraph -5.3.3. Trailer handbrakes set, front support leg/landing lowered, and rear leveling-support jack lowered; paragraph 2-3.2.1.

Power cable leads (AN/MJQ-35, AN/MJQ-35A, and AN/MJQ-36) or load cable leads (PU-797 and PU-797A) and ground cable disconnected from generator set load terminals; paragraph 4-12 and TM 9-6115-641-10.

External fuel source disconnected; paragraph 2-7.5.

Personnel Required

Two

REMOVAL

1. Remove four nuts (5, figure 5-5), lock washers (4) and cap screws (1) from generator output plate (2).

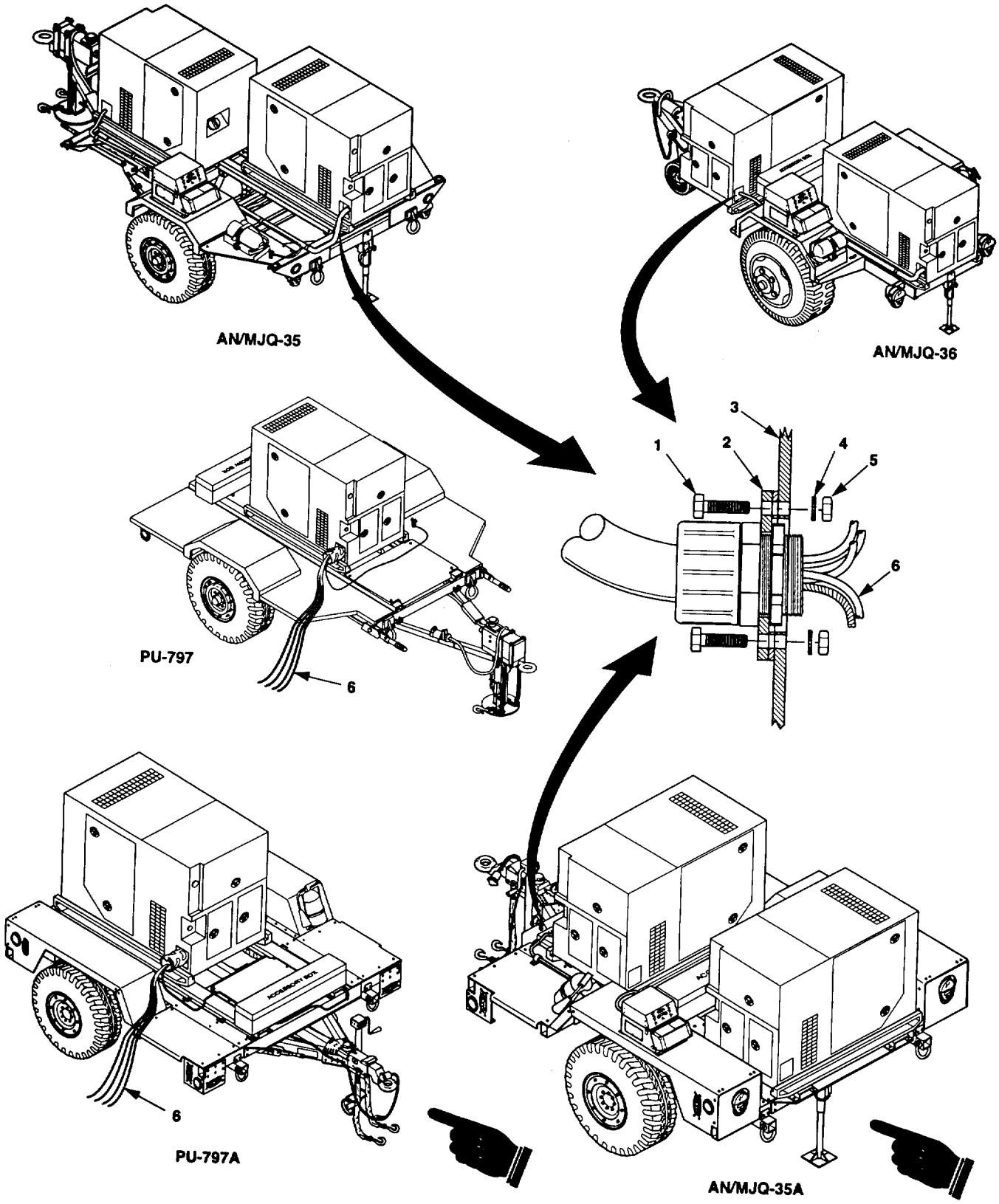

Figure 5-5. Power/Load Cable Removal.

2. For AN/MJQ-35, AN/MJQ-35A and AN/MJQ-36, carefully pull generator output plate (2) away from generator set housing (3). For Power Plants and Power Units, pull until power cable leads and ground cable (6) are free of generator set housing (3). Remove and retain gasket (7).

NOTE

Steps 3 through 6 must be performed if removing AN/MJQ-35 front generator set.

3. Remove four nuts (3, figure 5-6), flat washers (2), and screws (1) from cable clamps (4).

4. Remove three nuts (7), six flat washers (6), and three screws (5) from inboard edge of splash guard (11).

WARNING

Use the aid of an assistant when removing fender, splash guard, and switch box as an assembly. Failure to observe this *WARNING* can cause severe personal injury or death.

5. Remove four nuts (10), eight flat washers (9), and four screws (8) from fender (12).

6. Remove fender, splash guard, and switch box from trailer as an assembly.

NOTE

Hardware holding generator sets on trailers differs between configurations. When removing generator sets, refer to figure 5-7 to determine hardware used.

7. Remove self-locking nuts (1, figure 5-7), flat washers (2), lock washers (4), and cap screws (3).

8. Attach a four-leg sling to the four lifting/tiedown rings at the corners of the generator set skid base. The sling must meet the dimension requirements shown on the generator set lifting and tiedown diagram plate.

WARNING

When lifting generator set, use lifting equipment with minimum lifting capacity of 1750 pounds (793.8 kg). Do not stand or put arms, legs, or any part of body under hoisted load. Do not permit generator set to swing. Failure to observe this *WARNING* can result in severe personal injury or death to personnel or damage to equipment.

9. Using a wrecker, crane, or other lifting device having a lifting capacity of at least 1750 lb (793.8 kg) and sufficient lifting height, lift generator set (6) from trailer.

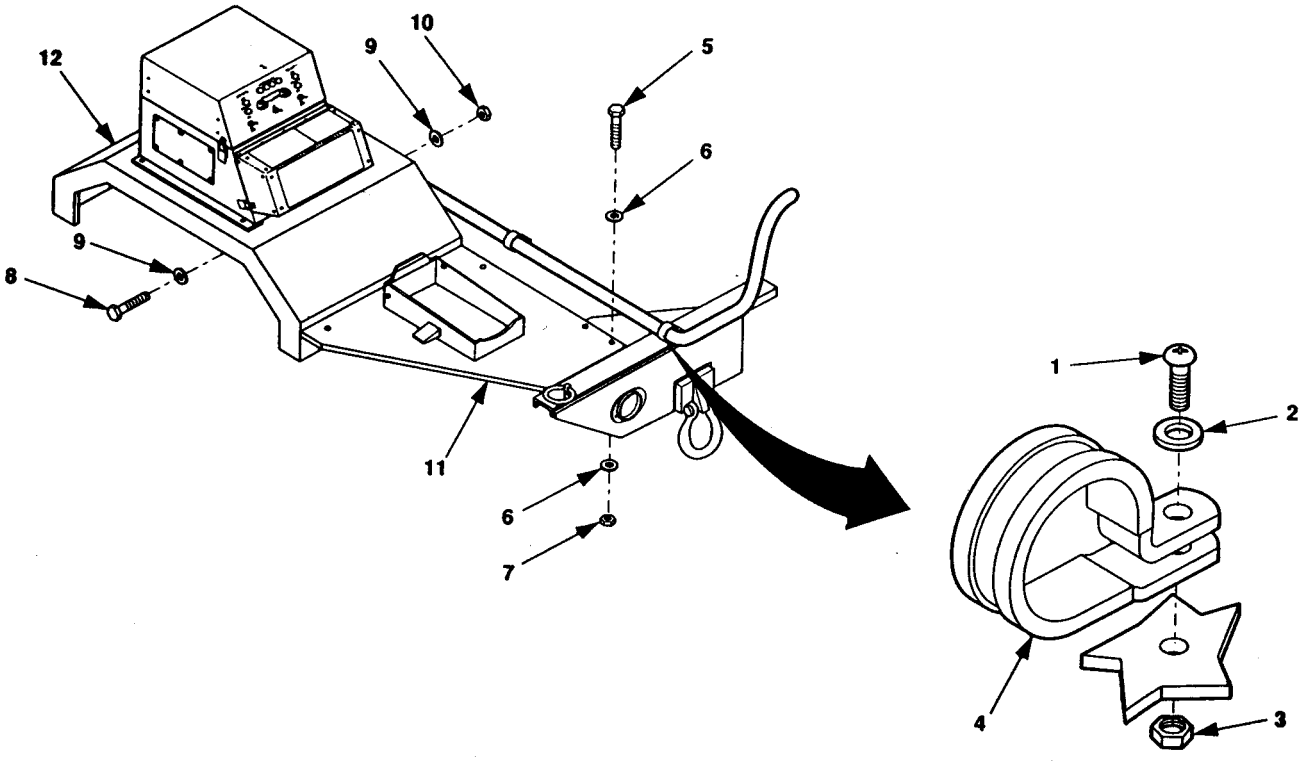

Figure 5-6. AN/MJQ-35 Roadside Fender Assembly Removal.

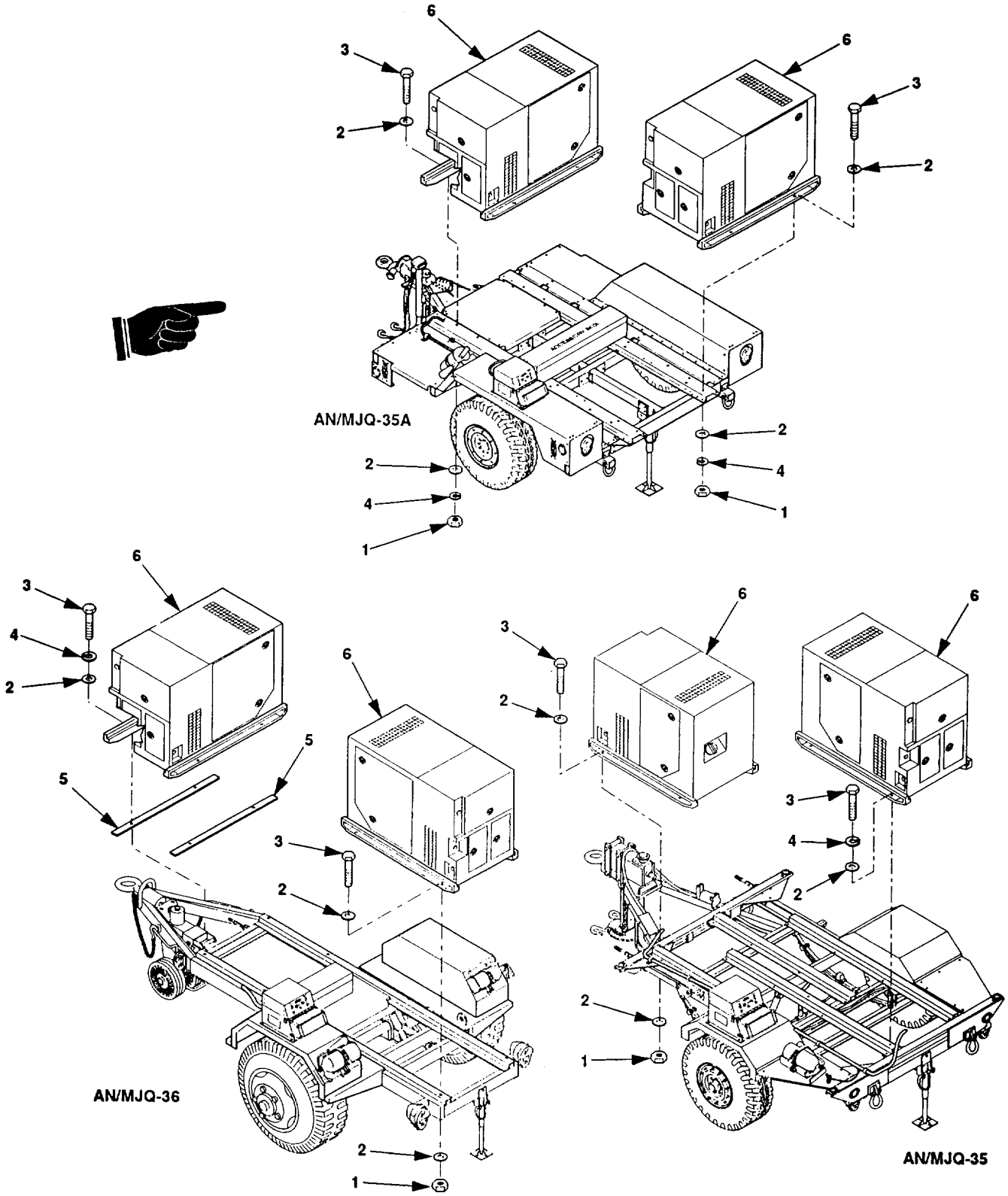

Figure 5-7. Removing Generator Set Mounting Hardware (Sheet 1 of 2).

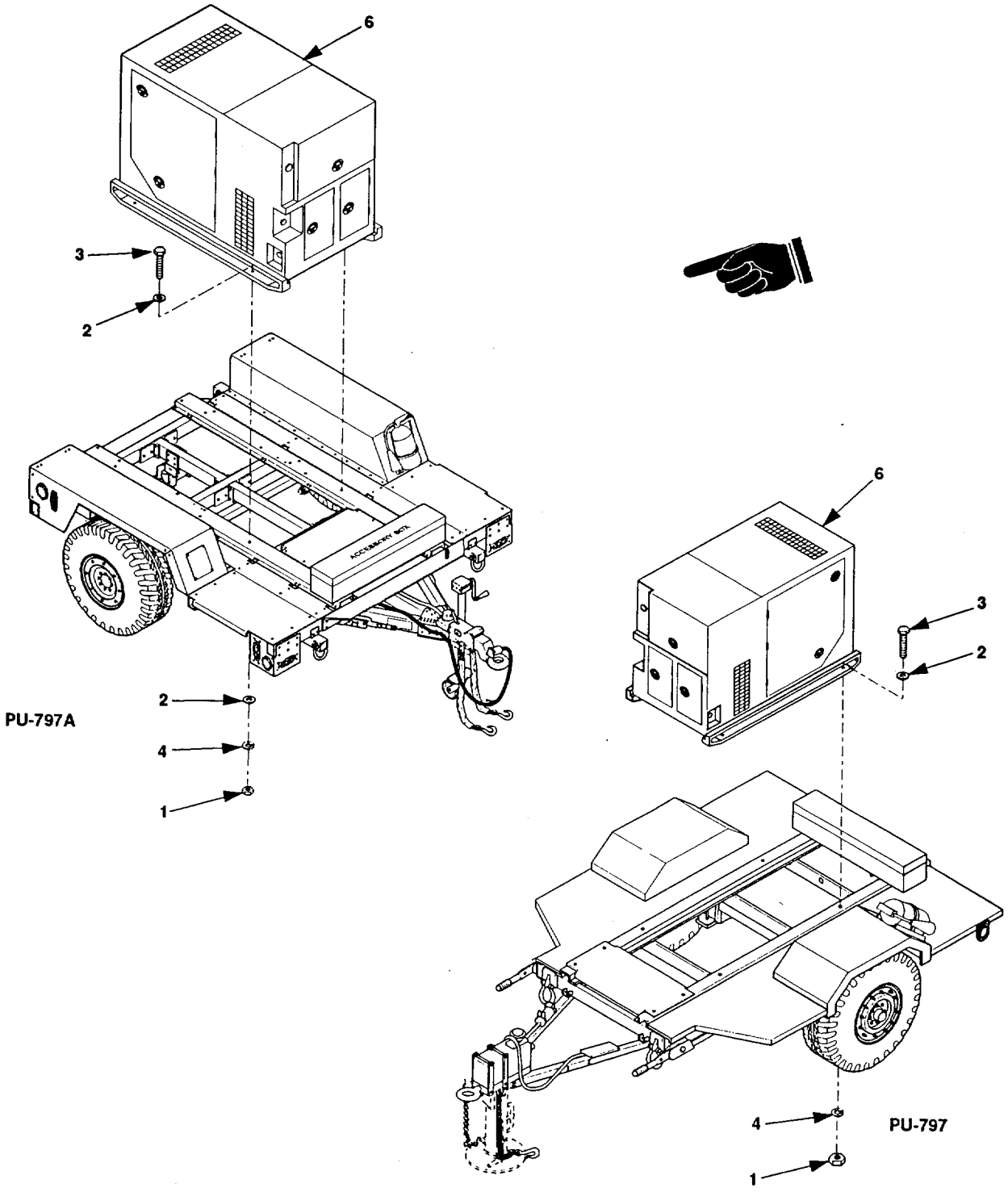

Figure 5-7. Removing Generator Set Mounting Hardware (Sheet 2 of 2).

INSTALLATION

1. Using the same sling as in removal step 8, attach sling to generator set lifting/tiedown rings.

2. Using the same lifting device as in removal step 9, lift generator set (6) and position it on trailer.

NOTE

Hardware holding generator sets on trailers differs between configurations. When installing generator sets, refer to figure 5-7 to determine hardware used. Position lock washers as *noted* in disassembly.

3. Install self-locking nuts (1, figure 5-7), flat washers (2), lock washers (4), and cap screws (3). Torque to 80-88 lb-ft (108.5-119.3 N•n).

4. Position fender, splash guard, and switch box (as an assembly) on trailer chassis.

5. Install four screws (8, figure 5-6), eight flat washers (9), and four self-locking nuts (10) in fender (12).

6. Install three screws (5), six flat washers (6), and three self-locking nuts (7) in inboard edge of splash guard (11).

7. Install cable clamps (4), screws (1), flat washers (2), and self-locking nuts (3).

8. Insert power cable electrical leads and ground cable through generator set access opening from which generator output plate was removed in removal step 1.

9. Position generator output plate (2, figure 5-5, AN/MJQ-35, AN/MJQ-35A and AN/MJQ-36 only) with gasket (7) against generator set housing (3). Secure with four cap screws (1), lock washers (4), and nuts (5).

10. Refer to TM 9-6115-641-10 and connect power cable ends (6) to generator set load terminals as follows:

    (1) Lead marked L1 to L1

    (2) Lead marked L2 to L2

    (3) Lead marked L3 to L3

    (4) Lead marked LO to LO

    (5) Ground cable to GND terminal

NOTE

Maintenance of switch box assembly consists of testing, removal, and installation of switch box wiring and other switch box components. Figure 5-8, Switch Box Components, is provided as an aid in performing the following maintenance procedures.

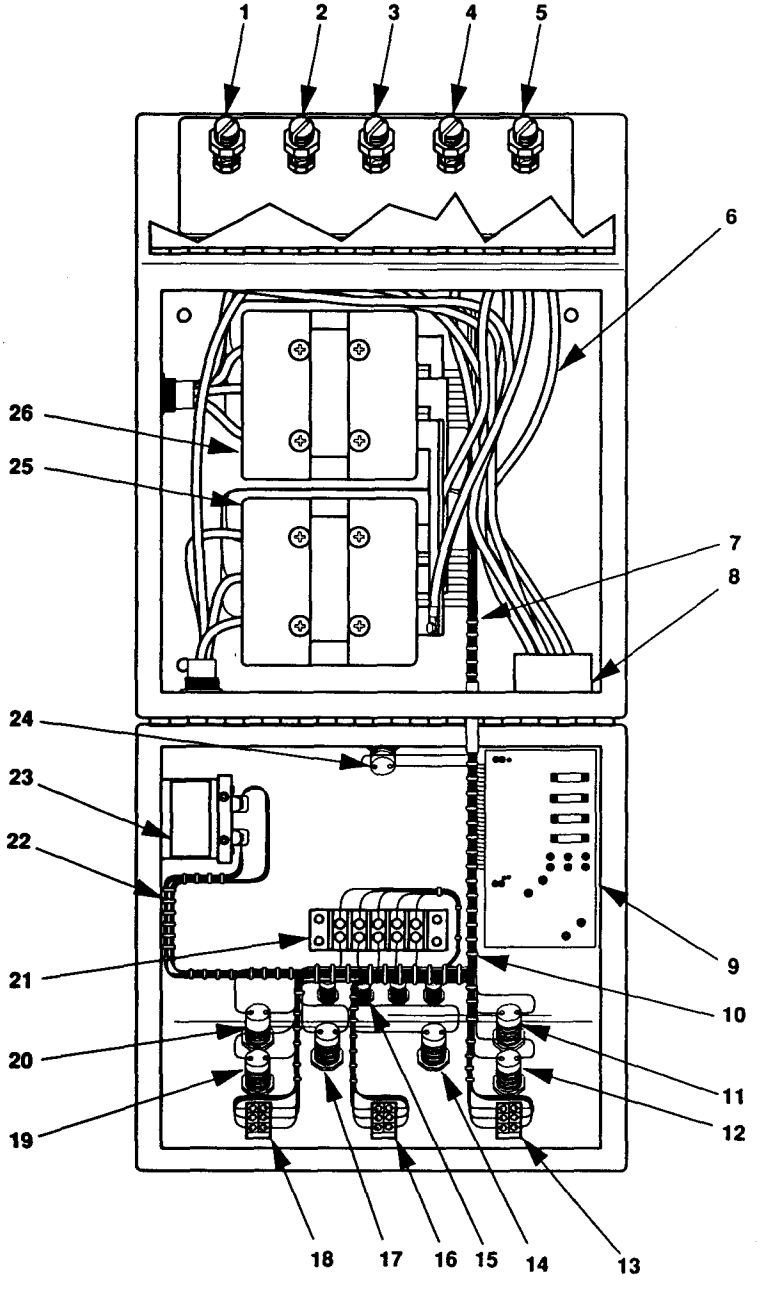

LEGEND

1. GND TERMINAL
2. TERMINAL L0
3. TERMINAL L3
4. TERMINAL L2
5. TERMINAL L1
6. PART OF OUTPUT CONN HARNESS W10
7. SW BOX HARNESS W9
8. OUTPUT CONN
9. RELAY BOARD ASSY
10. SEE 7
11. IND LIGHT HSG XDS2
12. IND LIGHT HSG XDS4
13. SWITCH S2
14. IND LIGHT HSG XDS6
15. HOUSING FOR SPARE LAMP (ONE OF FOUR)
16. SWITCH S10
17. IND LIGHT HSG XDS5
18. SWITCH S1
19. IND LIGHT HSG XDS3
20. IND LIGHT HSG XDS1
21. TERMINAL BOARD TB2
22. SEE 7
23. RELAY PP
24. IND LIGHT HSG XDS7
25. CONTACTOR K1
26. CONTACTOR K2

Figure 5-8. Switch Box Components.

5-7 ELECTRICAL LEADS W3-W8 MAINTENANCE.

This task covers: a. Test
b. Removal
c. Repair
d. Installation

INITIAL SETUP

Tools

Tool Kit, General Mechanic's (item 1, appendix B)
Multimeter (item 3, appendix B)
Crimping Tool, Hydraulic (item 4, appendix B)

Materials/Parts

Lock washers

Equipment Conditions

Reference

Both generator sets shut down; paragraph 2-5.3.3. Trailer handbrakes set, front support leg/landing leg lowered, and rear leveling-support jack lowered; paragraph 2-3.2.1. Switch box cover open.

TEST

1. Check continuity of lead W3 between contactor terminal K1-A1 and switch box load terminal L1.
2. Check continuity of lead W4 between contactor terminal K1-B1 and switch box load terminal L2.
3. Check continuity of lead W5 between contactor terminal K1-C1 and switch box load terminal L3.
4. Check continuity of lead W6 between contactor terminals K1-A1 and K2-A1.
5. Check continuity of lead W7 between contactor terminals K1-B1 and K2-B1.
6. Check continuity of lead W8 between contactor terminals K1-C1 and K2-C1.
7. Repair or replace any lead that does not have continuity (figure G-1, appendix G).

REMOVAL

NOTE

Figure 5-9, Detail A, shows connections at K1 or K2. Detail B shows connections at switch box load terminals.

1. Locate W3-W8 connections to terminals A1, B1, and C1 of contractors (13, figure 5-9 Detail A) and remove four screws (5), lock washers (6), and contactor shield (7).

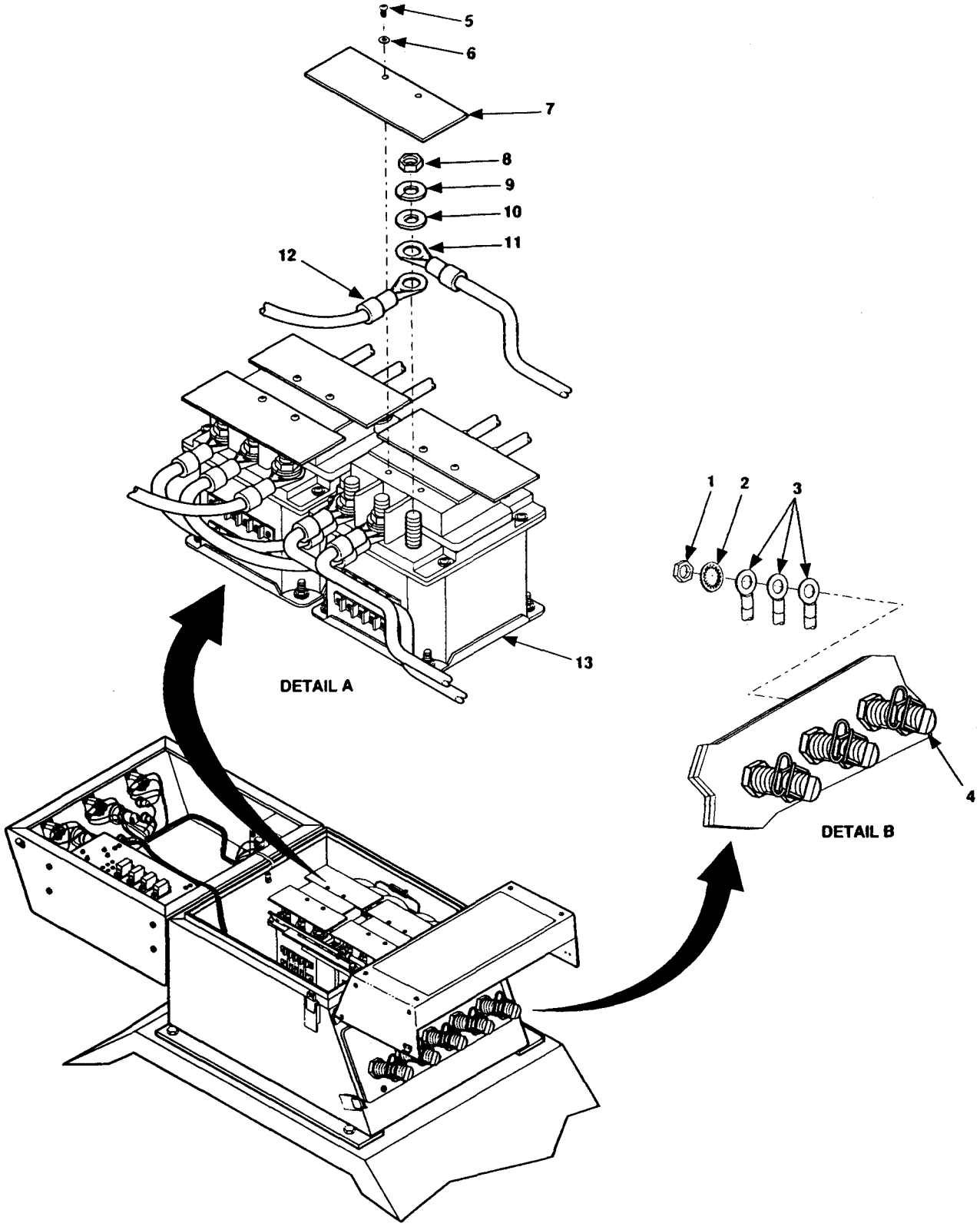

Figure 5-9. Switch Box Lead Connections.

2. Remove nuts (8), lock washers (9), flat washers (10), and leads (11 and 12).

3. Locate W3-W5 comections to switch box load terminals L1, L2, and L3 (4, Detail B).

4. Remove nuts (1), internal tooth washers (2), and leads (3) from load terminal (4).

REPAIR

Refer to figure G1, appendix G.

INSTALLATION

1. Install leads W3, W4, and W5 (3), internal tooth washers (2), and nuts (1) on switch box load terminals and tighten.

2. Install other end of leads W3-W6 (11 and 12), flat washers (10), lock washers (9), and nuts (8) on contractors (13).

3. Install contactor shield (7), lock washer (6), and screw (5).

5-8 SWITCH BOX HARNESS W9 MAINTENANCE.

This task covers: a. Test
b. Removal
c. Repair
d. Installation

INITIAL SETUP

Tools

Tool Kit, General Mechanic's (item 1, appendix B)
Solder Gun (item 3, appendix B)
Crimping Tool, Hand (item 3, appendix B)
Multimeter (item 3, appendix B)

Materials/Parts

Lock washers
Solder
Insulation sleeving

Equipment Conditions

Reference

Both generator sets shut down; paragraph 2-5.3.3. Trailer handbrakes set, front support leg/landing leg lowered, and rear leveling-support jack lowered; paragraph 2-3.2.1. Switch box cover open.

TEST

1. Remove four screws (2, figure 5-10), lock washers (3), and flat washers (4), and invert relay board assembly (1).

NOTE

Disconnect wire being checked at one end to isolate wire for continuity check.

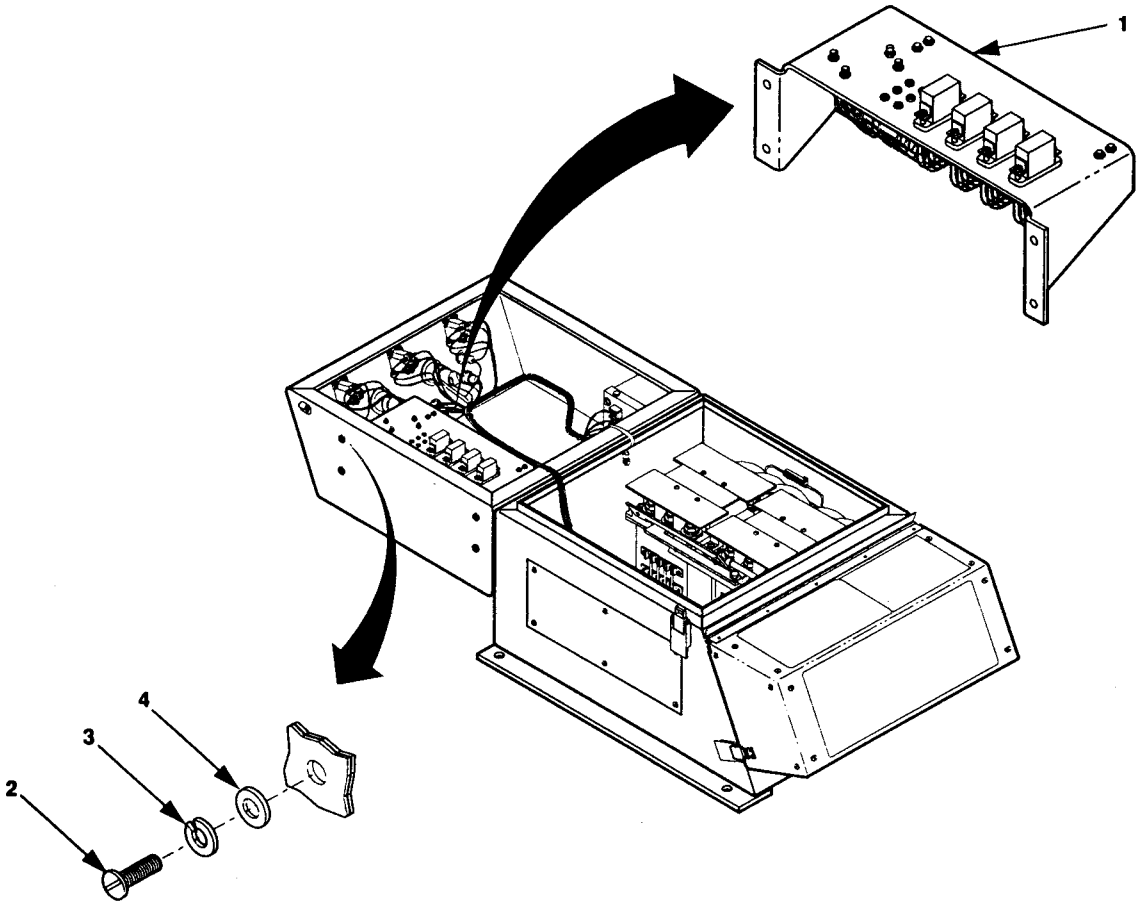

Figure 5-10. Switch Box Relay Board Assembly.

Table 5-1. Switch Box Harness Wire List

WIRE NO.	FROM	TO
W9-1	TB1-17	S10-2
W9-2	TB1-2	PP-4
W9-3	TB1-3	PP-3
W9-4	TB1-4	K2-A2
W9-5	TB1-5	XDS6-2
W9-6	TB1-6	K2-22
W9-7	TB1-7	K1-A2
W9-8	TB1-8	K1-21
W9-9	TB1-9	K1-C2
W9-10	TB1-10	K2-11
W9-11	TB1-10	PP-6
W9-12	TBl-11	PP-8
W9-13	TB1-12	K2-21
W9-14	TB1-13	K1-22
W9-15	TB1-16	S10-5
W9-16	----	----
W9-17	TB2-5	K2-C2
W9-18	----	----
W9-19	TB2-4	K2-Y
W9-20	XDS6-1	R3-1
W9-21	XDS5-2	PP-2
W9-22	XDS5-1	PP-1
W9-23	TB2-2	K1-C2
W9-24	----	------
W9-25	S2-2	S10-4
W9-26	------	------

WIRE NO.	FROM	TO
W9-28	S1-6	PP-7
W9-29	S1-2	S10-1
W9-30	S1-5	K1-12
W9-31	S2-6	PP-5
W9-32	------	------
W9-33	S2-5	K2-12
W9-34	K1-11	PP-8
W9-35	PP-4	N
W9-36	XDS7-2	PP-1
W9-37	XDS7-1	L3
W9-38	K1-22	K2-32
W9-39	K2-32	K1-C2
W9-40	K2-22	K2-C2
W9-41	K1-32	K2-C2
W9-42	K1-33	K2-11
W9-43	K2-Y	N
W9-44	K2-X	S2-3
W9-45	K2-33	K1-ll
W9-46	K1-X	S1-3
W9-47	K1-Y	N
W9-48	K1-Y	TB2-1
W9-49	K2-A1	R3-2
W9-50	PP-2	PP-3
W9-51	TB1-18	TB2-3
W9-52	TB2-3	Ground

2. Measure continuity of switch box harness W9 as listed in table 5-1. Refer to figure 5-8 and wiring diagram (figure FO- 1).

3. If any wire fails continuity check, repair or replace switch box harness.

4. If all wires pass continuity check, install relay board assembly (1), four flat washers (4), screws (7), lock washers (3), and screws (2).

REMOVAL

NOTE

Other leads removed during removal of W9 harness leads must be replaced with any attaching hardware.

1. Remove two screws (1, figure 5-11), lock washers (2), and contractor shields (3) that cover contactor terminals A2, B2, and C2 of contactor K1 and K2, and terminal Al of contactor K2.

2. Refer to table 5 - 1 and wiring diagram (figure FO- 1), tag leads, and remove nut (4), lock washer (5), and flat washer (6) from contractor terminals (9) and remove W9 leads.

3. Tag and remove leads (12) from terminals (13) by removing screws (11).

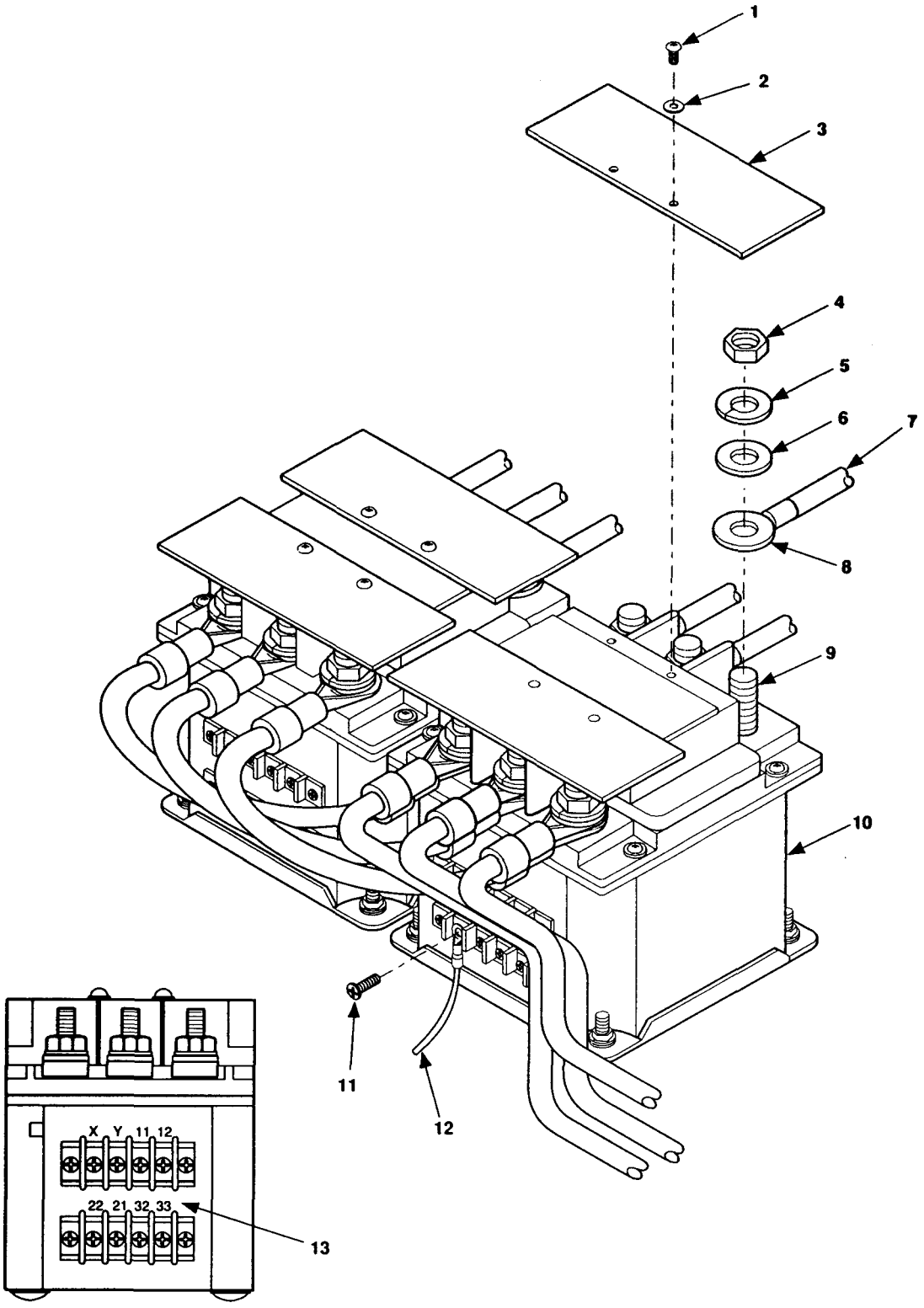

Figure 5-11. Disconnect Switch Box Harness W9 From Contactor.

3. Remove insulation from W9-20 and W9-49 connections to resistor R3 and unsolder harness leads.

4. Remove nut (1, figure 5-12), internal tooth washer (2), and W9 harness lead (3) from load terminals L0 and L3 (4).

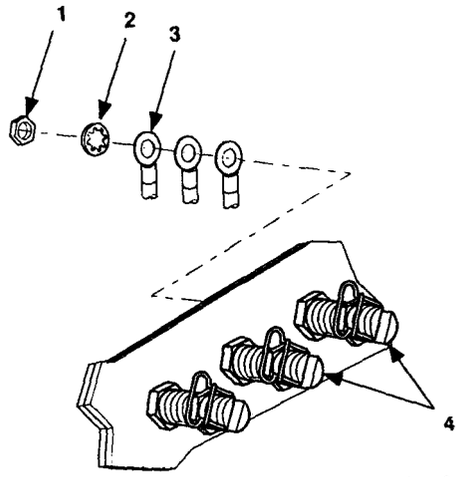

Figure 5-12. Switch Box Load Terminals.

5. Remove four screws (1, figure 5-13), lock washers (2), and flat washers (3), and invert relay board assembly (4).

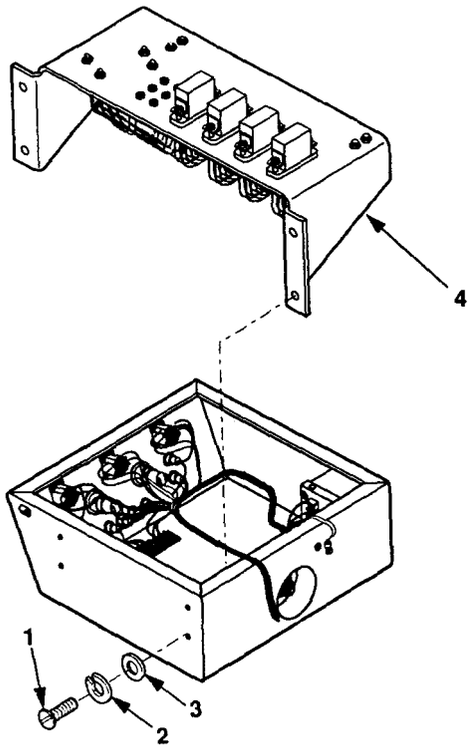

Figure 5-13. Relay Board Assembly Removal.

6. Refer to table 5-1 and tag and disconnect all W9 wires from terminal board TB1 and TB2.

7. Refer to table 5-1 and wiring diagram (figure FO-1), and tag and disconnect all W9 wires from switches S1, S2, and S10; indicator light housings XDS1 through XDS7; and permissive paralleling relay PP.

8. Remove switch box wiring harness W9 from switch box.

REPAIR

Refer to figure G3, appendix G.

INSTALLATION

1. Position harness in switch box.

2. Using figures 5-8 and figure FO-1 as a reference, connect wires to switches S1, S2, and S10; indicator light housings XDS1-XDS7; and permissive paralleling relay PP.

3. Refer to table 5-1 and connect all W9 leads to terminal boards TB-1 and TB-2.

4. Position relay board (4, figure 5-13) and install four flat washers (3), lock washers (2), and screws (1).

5. Install W9 harness leads (3, figure 5-12), internal tooth washer (2), and nut (1) on load terminals L0 and L3 (4).

6. Place insulation sleeving on leads W9-20 and W9-49 and solder leads to resistor R3.

7. Slide sleeving over solder joint and heat shrink.

8. Refer to table 5-1 and install W9 wires (7, figure 5-11), flat washers (6), lock washers (5), and nuts (4) on contactor terminals (9).

9. Refer to table 5-1 and install W9 leads (12) on terminals (13) using screws (11).

10. Install contactor shield (3), two lock washers (2), and screws (1) over contactor terminals A2, B2, and C2.

5-9 RELAY BOARD HARNESS W11 MAINTENANCE

This task covers: a. TEST c. Repair
b. Removal d. Installation

INITIAL SETUP

Tools
General Mechanics Tool Hit (item 1, appendix B)
Solder Gun (item 3, appendix B)
Crimping Tool, Hand (item 3, appendix B)
Multimeter (item 3, appendix B)

Material/Parts
Solder
Lock washers

Equipment Conditions
Reference

Both generator sets shut down; paragraph 25.&3. Trailer handbrakes set, front support leg/landing lowered, and rear leveling-support jack lowered; paragraph 2-3.2. Switch box cover open.

TEST

1. Remove four screws (1, figure 514), lock washers (2), and flat was(3), and invert relay board assembly (4).

2. Refer to wiring diagram (figure FO-1) and table 5-2, and perform continuity check of relay board harness W11.

Table 5-2. Relay Board Harness Wire List

WIRE NO.	FROM	TO	WIRE NO.	FROM	TO
W11-1	XK3-2	TB1-1	W11-19	R1-1	TB1-17
W11-2	XK3-3	TB1-6	W11-20	XK6-3	TB1-12
W11-3	XK3-4	TB1-5	W11-21	XK6-4	TB1-11
W11-4	XK3-5	TB1-3	W11-22	XK6-5	TB1-16
W11-5	XK3-6	TB1-4	W11-23	XK6-6	TB1-13
W11-6	XK3-7	TB1-2	W11-24	XK6-7	TB-15
W11-7	XK5-2	TB1-1	W11-25	R1-2	E6
W11-8	XK5-3	TB1-8	W11-26	R2-2	E3
W11-9	XK5-4	TB-10	W11-27	E5	TB1-1
W11-10	XK5-5	TB1-17	W11-28	E4	TB1-2
W11-11	XK5-6	TB1-6	W11-29	R2-1	TB1-16
W11-12	E-7	E-6	W11-30	E2	TB1-15
W11-13	XK4-2	TB1-14	W11-31	E1	E4
W11-14	XK4-3	TB1-9	W1142	XK5-7	TB1-2
W11-15	XK4-4	TB1-5	W1133	E1	TB1-14
W11-16	XK4-5	TB1-3	W11-34	E8	TB1-18
W11-17	XK4-6	TB1-7	W11-35	XK6-2	TB1-14
W11-18	XK4-7	TB1-15	W11-36	E9	E3

NOTE

Wire being checked must be disconnected at one location to isolate wire for continuity check.

3. If any wire fails continuity check, repair or replace relay board harness.

4. If all wires pass continuity check, install relay board assembly (4), four flat washers (3), lock washers (2), and screws (1).

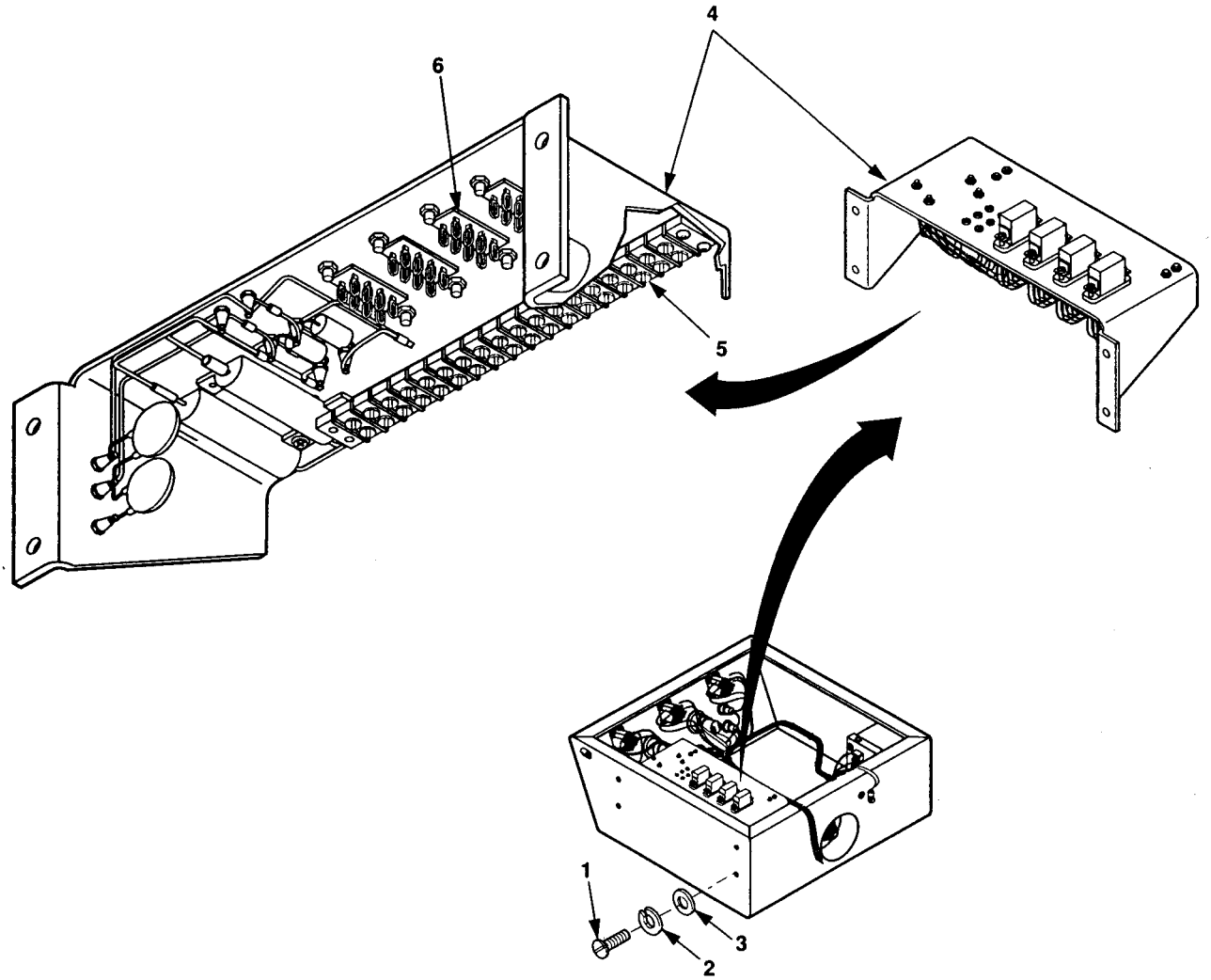

Figure 5-14. Relay Board Harness Assembly W11 Removal.

REMOVAL

1. Remove four screws (1), lock washers (2), flat washers (3), and invert relay board assembly (4).

NOTE

Other leads removed during removal of W11 harness leads must be replaced with any attaching hardware.

2. Refer to relay board harness wire list (table 5-2), and tag and disconnect all W11 leads from terminal board (5) and relay sockets (6).

3. Remove relay board harness W11.

REPAIR

Refer to figure G2, appendix G.

INSTALLATION

1. Position wiring harness W11 on relay board so that wire ends having terminal lugs are near TB1 terminals (5).

2. Refer to table 5-2 and comect all W11 leads.

3. Position relay board assembly (4), and install four flat washers (3), lock washers (2), and screws (1).

5-10 OUTPUT CONNECTOR HARNESS W10 MAINTENANCE.

This task covers: a. Test
b. Removal
c. Repair
d. Installation

INITIAL SETUP

Tools

Tool Kit, General Mechanic's (item 1, appendix B)
Solder Gun (item 3, appendix B)
Crimping Tool, Hydraulic (item 4, appendix B)
Multimeter (item 3, appendix B)

Materials/Parts

Solder
Lock washers

Equipment Conditions

Reference

Both generator sets shut down; paragraph 2-5.3.3. Trailer handbrakes set, front support leg/landing lowered, and rear leveling-support jack lowered; paragraph 2-3.2.1. Switch box cover open.

TEST

1. Check continuity of output connector harness as listed in table 5-3.

Tdble 5-3. Output *Connector Harness Continuity Check*

FROM	TO	CONTINUITY	NO CONTINUITY
L0	L1		X
L0	L2		X
L0	L3		X
L0	GND	X	
L1	L2		X
L1	L3		X
L1	GND		X
L2	L3		X
L2	GND		X
L3	GND		X
J1-A	L1	X	
J1-B	L2	X	
J1-C	L3	X	
J1-N	L0	X	
J1-G	GND	X	

2. If any wire fails continuity check, repair or replace output connector harness.

REMOVAL

1. Remove nuts (8, figure 5-15) and internal tooth washers (9) from switch box load terminals (11).

NOTE

Other leads removed during removal of W11 harness leads must be replaced with any attaching hardware.

2. Tag and remove output comector leads (10) from switch box load terminals (11).

3. Remove four nuts (7) lock washers (6), eight flat washers (2), chain (3) attached to dust cover, four screws (l), and output connectnr (4).

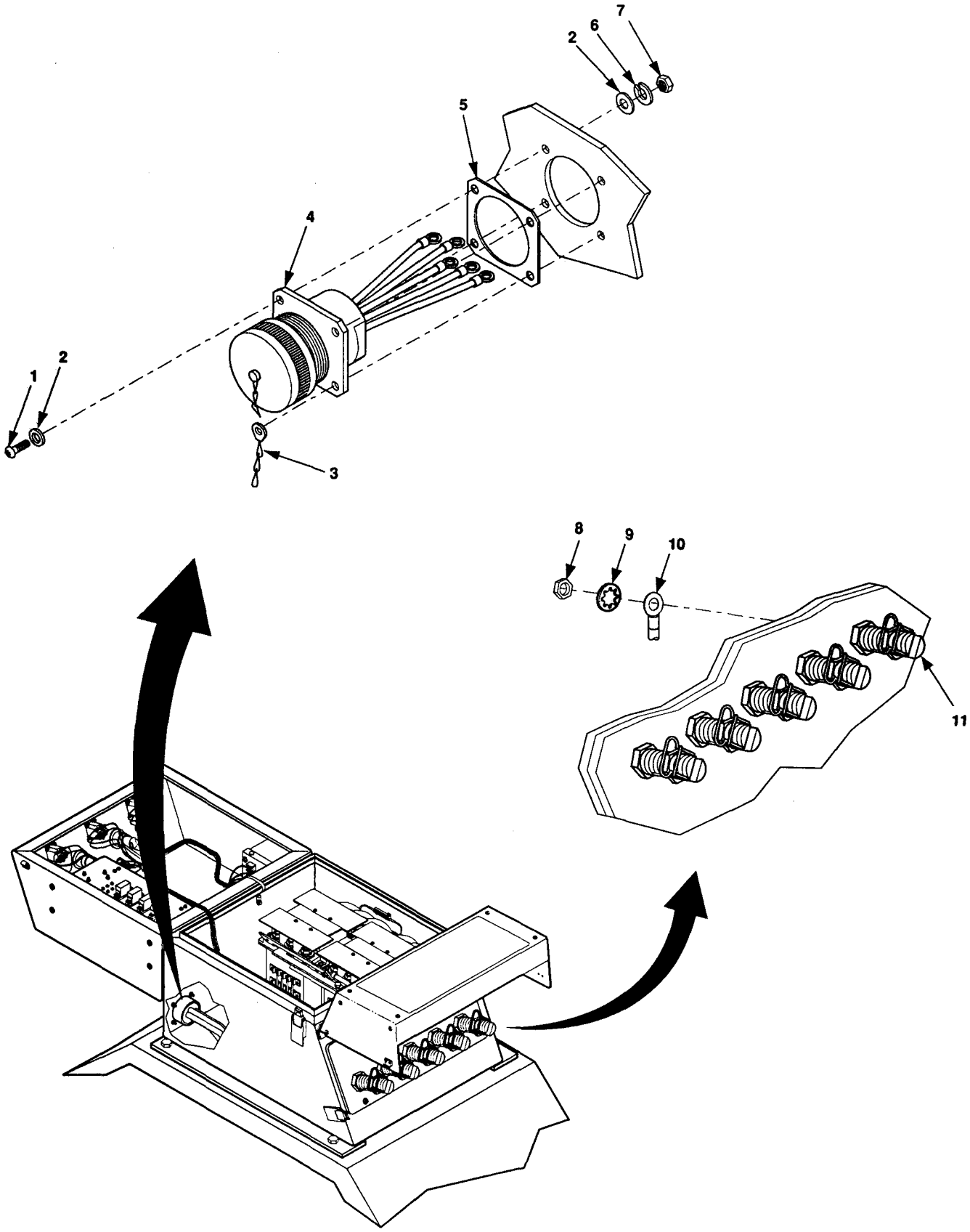

Figure 5-15. Output Connector Harness.

REPAIR

Refer to figure G-4, appendix G.

INSTALLATION

1. Install output connector(4), chain (3) atttached to dust cover, four screws (1), eight flat washers (2), four lock washers (6), and nuts (7).

2. Refer to wiring diagram (figure FO-1) and tags placed on leads during removal, and install leads (10), internal tooth washers (9), and nuts (8) on load terminals (11).

5-11 RELAYS K3-K6 MAINTENANCE.

This task covers: a. Removal
b. Test
c. Installation

INITIAL SETUP

Tools

Tool Kit, General Mechanic's (item 1, appendix B)
Multimeter (item 3, appendix B)
24 VDC Power Source (item 3, appendix B)

Materials/Parts

Lock washers

Equipment Conditions

Reference

Both generator sets shut down; paragraph 2-5.3.3. Trailer handbrakes set, front support leg/landing lowered, and rear leveling-support jack lowered; paragraph 2-3.2.1. Switch box cover open.

REMOVAL

Remove two screws (1, figure 5-16), washers (2), and relays (3) horn relay sockets (4).

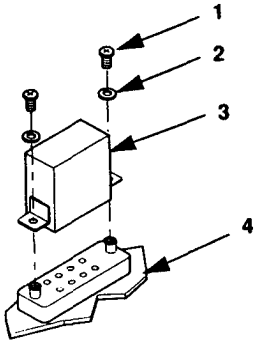

Figure 5-16. *Relay* K3-K6 *Removal.*

TEST

1. Repeat removal step above.

2. Refer to figure 5-17 and check continuity of relay coil between pins X1 and X2.

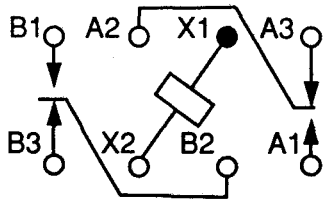

COIL DEENERGIZED

Figure 5-17. Relay K3-K6 *Schematic.*

WARNING

Dangerous voltage exits on live circuits. Always observe precautions and never work alone. Failure to observe this warning could result in severe personal injury or death.

3. Attach 24 VDC power source across pins X1 and X2 of relay and check continuity of relay contacts before and after relay is energized as listed in table 5-4.

Table 5-4. Relay Operation

RELAY STATUS	CONTINUITY BETWEEN PINS	NO CONTINUITY BETWEEN PINS
Power NOT Applied	A2 and A3 B2 and B3	A1 and A2 B1 and B2
Power Applied	A1 and A2 B1 and B2	A2 and A3 B2 and B3

4. If all multimeter indications are correct, perform installation procedures.

5. If any multimeter indication is not as listed in table 5-4 perform installation with new relay.

INSTALLATION

Install relay (3, figure 5-16) in relay socket (4) and secure with two washers (2) and screws (1).

5-12 PERMISSIVE PARALLELING RELAY MAINTENANCE.

This task covers: a. Removal
b. Test
c. Installation

INITIAL SETUP

Tools

Tool Kit, General Mechanic's (item 1, appendix B)
Multimeter (item 3, appendix B)
Power Oscillator, 50-420 Hz (item 3, appendix B)

Materials/Parts

Lock washers

Equiument Conditions

Reference

Both generator sets shut down; paragraph 2-5.3.3. Trailer handbrakes set, front support leg/landing lowered, and rear leveling-support jack lowered; paragraph 2-3.2.1. Switch box cover open.

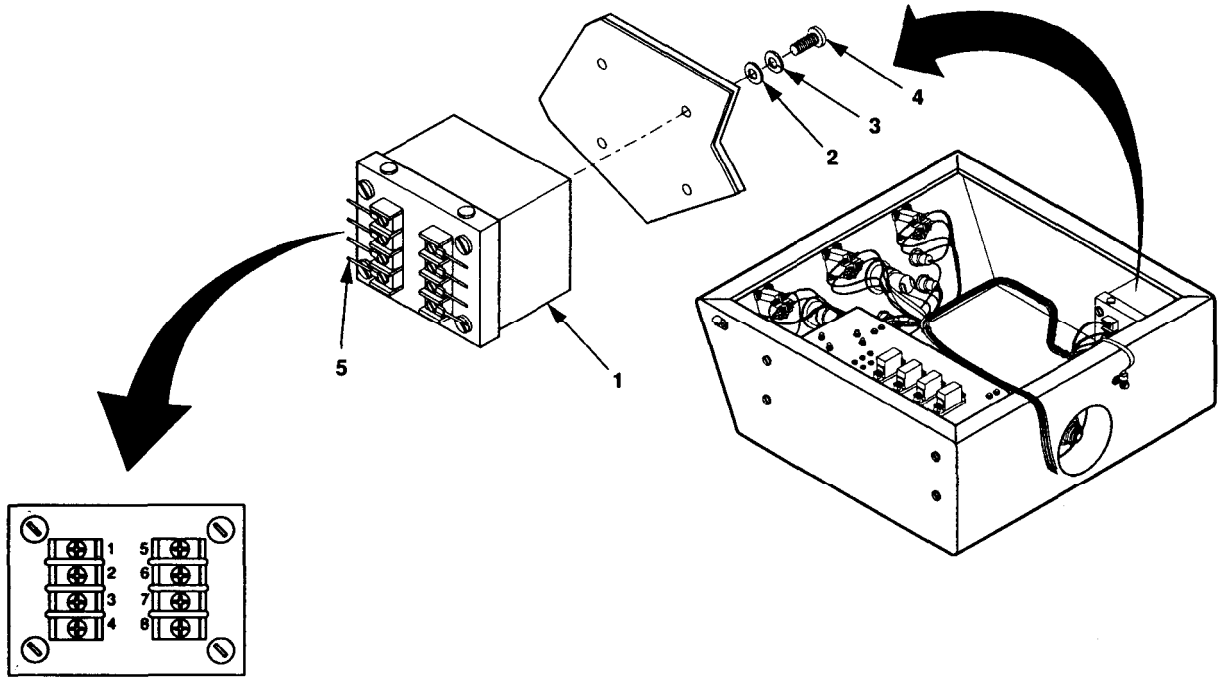

Figure 5-18. Permissive Paralleling Relay.

REMOVAL

Tag and disconnect leads (5, figure 5-18). Remove four screws (4), lock washers (3), flat washers (2), and permissive paralleling relay (1).

TEST

1. Perform removal procedure above and position permissive paralleling relay (1) on work surface. Connect a variable AC voltage, 50-420 Hz, power oscillator across terminals 1 and 2.

2. Connect multimeter across terminals 5 and 6 and check for continuity. If continuity exists, leave multimeter connected for remainder of test. If no continuity exists, replace relay.

3. Connect a variable AC voltage, 50-420 Hz power oscillator, across terminals 1 and 2.

4. Apply 120 volts AC across terminals 3 and 4.

5. Adjust the oscillator output for 60 Hz.

6. Increase the oscillator output to a value of 20 volts. Multimeter should indicate no continuity. Slowly decrease the oscillator output until continuity is observed. Oscillator output voltage should be 8±1 VAC.

7. Increase the oscillator output until multimeter shows no continuity. Oscillator voltage should be no more than 1 volt above previous voltage reading.

8. Perform steps 6. and 7. with multimeter connected across terminals 7 and 8.

9. Perform installation procedure using new relay if it fails to meet the requirements of steps 6. through 8.

10. If relay meets the requirements of steps 6. through 8., perform installation procedures.

INSTALLATION

Position permissive paralleling relay (1) in switch box and install flat washer (2), lock washer (3), and screw (4). Connect leads (5).

5-13 CONTACTORS K1 AND K2 MAINTENANCE.

This task covers: a. Removal
b. Test
c. Installation

INITIAL SETUP

Tools

Tool Kit, General Mechanic's (item 1, appendix B)
Multimeter (item 3, appendix B)

Materials/Parts

Lock washers

Equipment Conditions

Reference

Both generator sets shut down; paragraph 2-5.3.3. Trailer handbrakes set, front support leghnding lowered, and rear leveling-support jack lowered; paragraph 2-3.2.1. Switch box cover open.

REMOVAL

1. Remove four screws (1, figure 5-19), lock washers (2) and terminal shields (3) from contactor (10).

2. Remove nuts (4), lock washers (5), and flat washers (6) horn all contactor terminals (9).

NOTE

Leads W3, W4, and W5 (13, 14, and 15) must be removed along with leads W6, W7, and W8 when contactor K1 is being removed.

3. Tag and remove power cable leads (7) from contactor terminals A2, B2, and C2 (8), and ends of leads W6, W7, and W8 (10, 11, and 12) from contactor terminals Al, Bl, and Cl.

4. Tag and disconnect terminal lugs of W9 wires from contactor (9) terminals (16) X, Y, 11, 12, 21, 22, 32, and 33.

5. Remove four nuts (17), lock washers (18), flat washers (19), and contactor (9).

TEST

1. Check for continuity between contactor terminals X and Y. If no continuity, replace contactor.

WARNING

Dangerous voltage exits on live circuits. Always observe precautions and never work alone. Failure to observe this warning could result in severe personal injury or death.

2. Attach 115 VAC power source across pins x and y of contactor and check continuity of relay contacts before and after contactor is energized as listed in table 5-5.

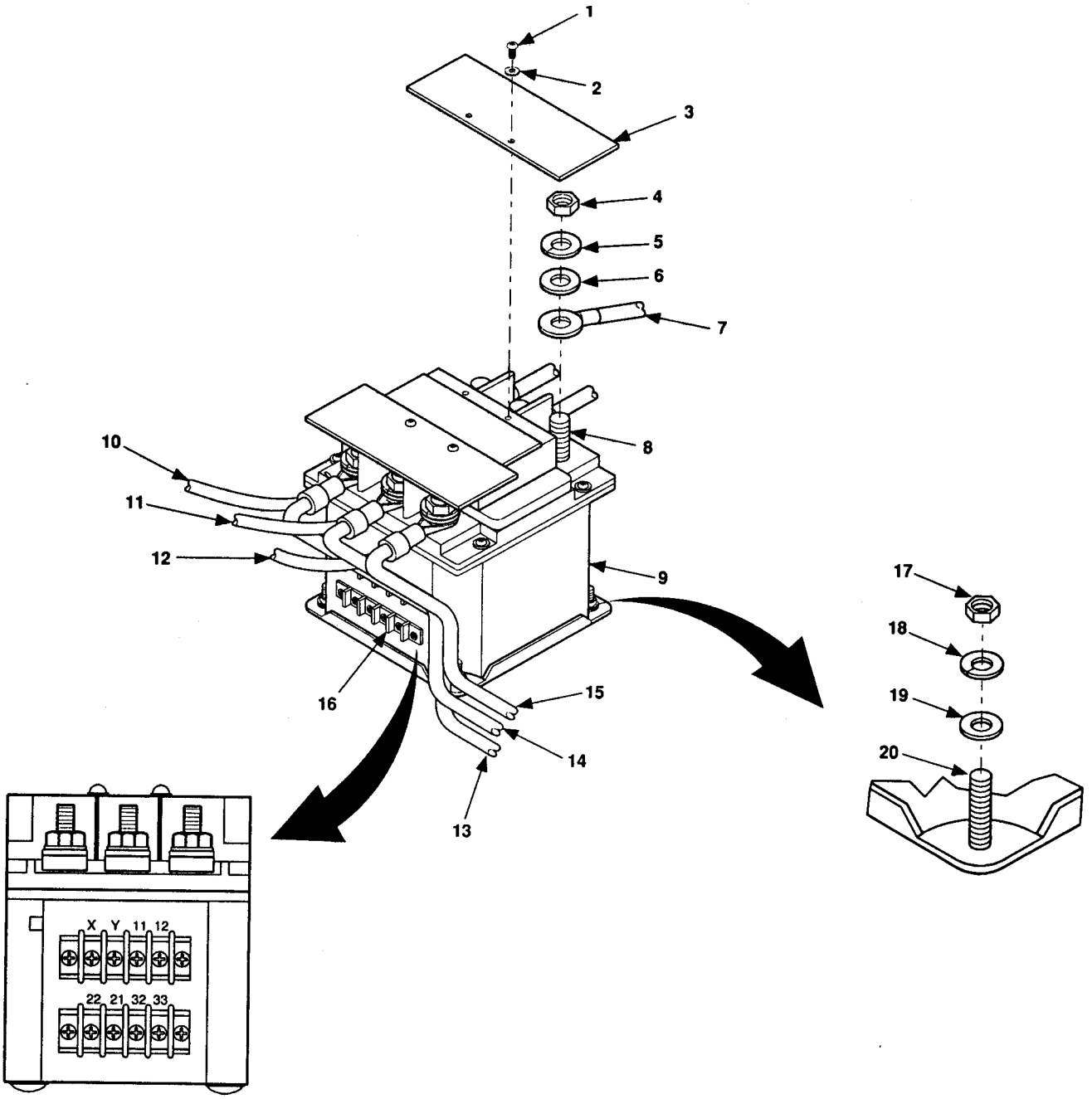

Figure 5-19. Replace Contactor.

Table 5-5. Contactor Operation

CONTACTOR STATUS	CONTINUITY BETWEEN PINS	NO CONTINUITY BETWEEN PINS
Power NOT Applied	32 and 33	21 and 22 11 and 12 A1 and A2 B1 and B2 C1 and C2
Power Applied	21 and 22 11 and 12 A1 and A2 B1 and B2 C1 and C2	32 and 33

3. If all multimeter indications are correct, install contactor terminal shield (3), four flat washers (2), and screws (1).

4. Replace contactor if any multimeter indication is not as listed in table 5-5.

INSTALLATION

1. Position contactor K1 or K2 (9) on studs (20).

2. Install four flat washers (19), lock washers (18), and nuts (17).

3. Refer to wiring diagram (figure FO-1) and tags installed in removal. Connect applicable terminal lugs of W9 wires to contactor terminals (16) X, Y, 11, 12, 21, 22, 32, and 33. Remove tags.

4. If terminal shields (3) of contactor are installed, remove four screws (1), lock washers (2) and terminal shields (3).

5. Remove nuts (4), lock washers (5), and flat washers (6) from contactor terminals (8) A1, B1, C1, A2, B2, and C2.

NOTE

Leads W3, W4, and W5 (13, 14, and 15) must be installed along with leads W6, W7, and W8 when contactor K1 is being installed.

6. Place free ends of jumpers W6, W7, and W8 (10, 11, and 12) on contactor K1 (15) terminals (16) Al, B1, and C1.

7. Install flat washer (6), lock washer (5), and nut (4) on terminals (8) for A1, B1, and C1. Tighten nuts (4).

8. Place power cable leads (7) on contactor terminals (8) A2, B2, and C2. Remove tags.

9. Install flat washers (6), lock washers (5), and nuts (4) on contactor terminals (8) A2, B2, and C2.

10. Install terminal shields (3), two lock washers (2) end screws (1) on contactor (9).

5-14 RESISTORS RI-R3 MAINTENANCE.

This task covers: a. Test
b. Removal
c. Installation

INITIAL SETUP

Tools

Tool Kit, General Mechanic's (item 1, appendix B)
Multimeter (item 3, apendix B)
Soldering Gun (item 3, apendix B)

Materials/Parts

Lock washers
Solder

Equipment Conditions

Reference

Both generator sets shut down; paragraph 2-5.3.3. Trailer handbrakes set, front support leg/landing lowered, and rear leveling-support jack lowered; paragraph 2-3.2.1. Switch box cover open.

TEST

NOTE

If testing R1 or R2, step 1. must be performed.

1. Remove four screws (1, figure 5-20), lock washers (2), and flat washers (3) and invert relay board assembly (4).

2. Measure resistance of R1 (5) or R2 (6) for 246.5-251.5 ohms. If resistance is out of tolerance, replace resistor.

3. Measure resistance of R3 (11) for 2465-2515 ohms. If resistance is out of tolerance, replace resistor.

4. If resistors R1 and R2 are within tolerance, place relay board assembly in position and secure with flat washers (3), lock washers (2), and screws (1).

REMOVAL

NOTE

If removing R1 or R2, step 1, must be performed.

1. Remove four screws (1), lock washers (2), and flat washers (3) and invert relay board assembly (4).

2. Tag and unsolder leads from resistor.

3. Remove two nuts (9), lock washers (8), flat washers (7), screws (10), and resistor (5,6, or 11).

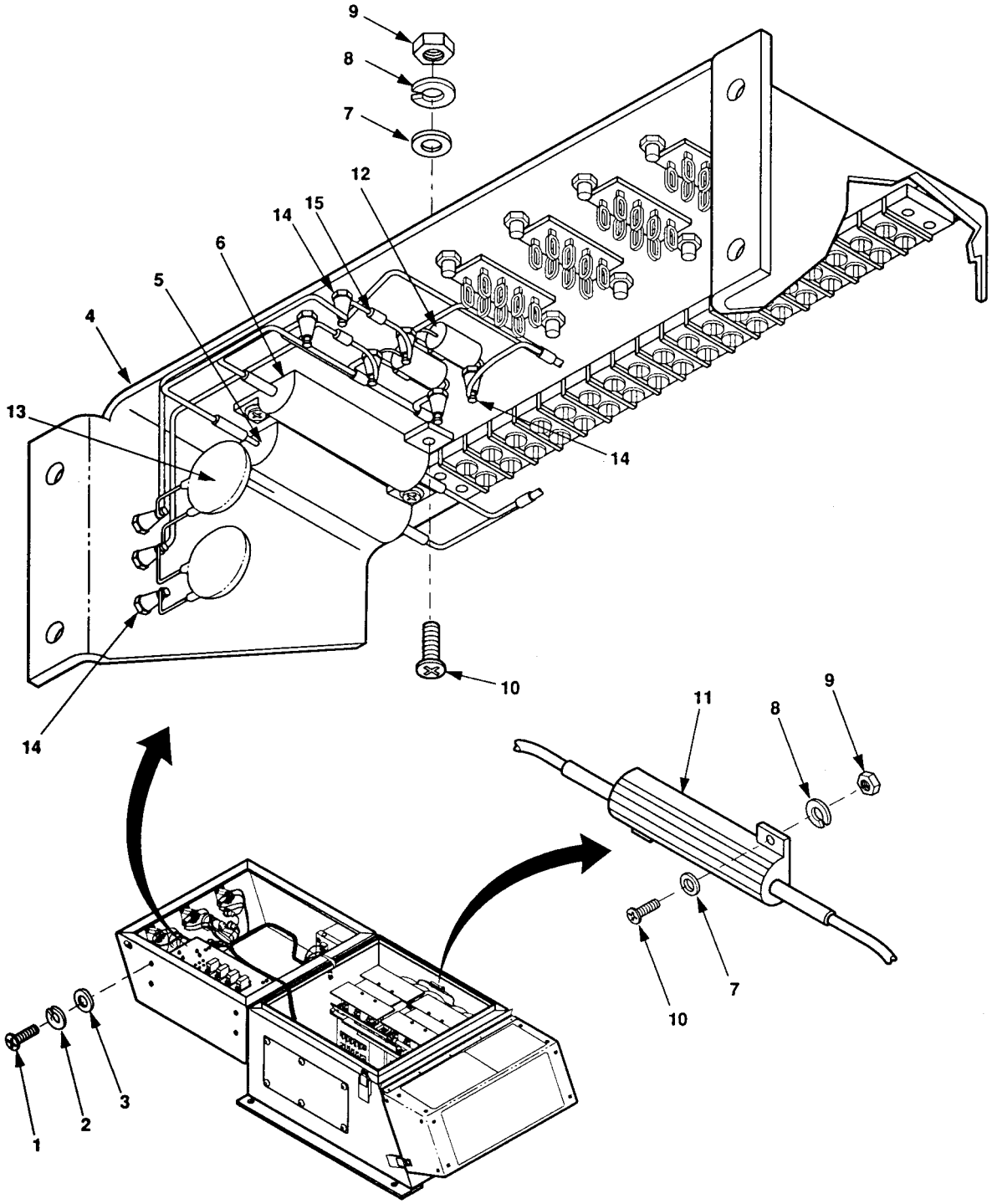

Figure 5-20. Resistors, Capacitors, and Diodes.

INSTALLATION

1. Install resistor (5, 6, or 11), two screws (10), flat washers (7), lock washers (8), and nuts (9).

2. Solder leads to resistor.

3. Position relay board assembly (4)and install four flat washers (3),lock washers (2), md screws (1).

5-15 CAPACITORS C1-C4 MAINTENANCE.

This task covers: a. Test
b. Removal
c. Installation

INITIAL SETUP

Tools

Tool Kit, General Mechanic's (item 1, appendix B)
Multimeter (item 3, apendix B)
Soldering Gun (item 3, apendix B)

Materials/Parts

Solder

Equipment Conditions

Reference

Both generator sets shut down; paragraph 2-5.3.3. Trailer handbrakes set, front support leg/landing lowered, and rear leveling-support jack lowered; paragraph 2-3.2.1. Switch box cover open.

TEST

1. Remove four screws (1, figure 5-20), lock washers (2), and flat washers (3) and invert relay board assembly (4).

2. Discharge capacitors C1 and C2 (12) and C3 and C4 (13) by shorting across terminals.

3. Isolate capacitors C1 and C2 at E5 and E2 respectively. Tag and remove wire W11-34 at TB1-18 to isolate capacitors C3 and C4.

4. Disconnect one end of capacitor and check continuity between terminals, using a multimeter in the 200 kohms range. The meter needle should deflect and return to infinity within a few seconds. (If using a digital meter, the readout should run upscale to infinity).

5. If capacitor fails test, replace it. Refer to removal and installation procedures.

6. If capacitor passes test, place relay board assembly (4) in position and secure with four flat washers (3), lock washers (2), and screws (1).

REMOVAL

1. Remove four screws (1), lock washers (2), and flat washers (3) and invert relay board assembly (4).

2. Unsolder capacitor (12 or 13) leads from stud terminals (14) and remove capacitor.

INSTALLATION

CAUTION

Refer to wiring diagram (figure FO-1) and observe polarity of capacitors C1 and C2 before installing. Failure to observe this caution could result in damage to capacitors.

1. Solder capacitor (12 or 13) leads to terminal studs (14) as applicable.

2. Invert relay board assembly (4) and install four flat washers (3), lock washers (2), and screws (1).

5-16 DIODES CR1-CR4 MAINTENANCE.

This task covers: a. TEST c. Installation
b. Removal

INITIAL SETUP

Tools

Tool Kit, General Mechanic's (item 1, appendix B)
Multimeter (item 3, appendix B)
Soldering Gun (item 3, appendix B)

Materials/Parts

Solder

Equipment Conditions

Reference

Both generator sets shut down; paragraph 2-5.3.3. Trailer handbrakes set, front support leg/landing lowered, and rear leveling-support jack lowered; paragraph 2-3.2.1. Switch box cover open.

TEST

1. Remove four screws (1, figure 5-20), lock washers (2), and flat washers (3) and invert relay board assembly (4).

2. Unsolder one end of diode (15) to be tested.

3. Set multimeter on R x 1 range, and measure the resistance between diode terminals. Reverse multimeter leads and measure again. Resistance should be infinity in one direction and less than 30 ohms in the other.

REMOVAL

1. Remove four screws (1), lock washers (2), and flat washers (3) and invert relay board assembly (4).

2. Unsolder diode (15) from stud terminal (14) and remove diode.

INSTALLATION

1. Refer to wiring diagram (figure FO-1) and solder diode leads to terminal studs (14) as applicable.

2. Invert relay board assembly (4) and install four flat washers (3), lock washers (2), and screws (1).

5-16.1 PU-797A AND AN/MJQ-35A FLOOR AND FENDER MAINTENANCE.

This task covers: a. Removal b. Repair c. Installation

~~INITIAL SETUP~~

Tools

Tool Kit, General Mechanic's (item 1, appendix B)
Rivet Gun (item 8, appendix B)

Materials/Parts

Rivets, (items 6 and 7, appendix I)

Equipment Conditions

Reference

Generator set shut down; paragraph 2-5.3.3.

Trailer handbrakes set, front support leg/landing lowered, and rear leveling-support jacks lowered; paragraph 2-3.2.1.

Generator sets removed as required (AN/MJQ-35A); paragraph 5-6

Switch Box assembly removed (AN/MJQ-35A roadside fender only); paragraph 4-13.

REMOVAL

1. Floors.

NOTE

PU-797A and AN/MJQ-35A trailers have center and side floors or platforms riveted to the trailer. The side floors are in two sections.

Remove rivets (1, figure 5-20.1) and floor sections (2) from trailer chassis (3).

2. Fenders.

   a. If necessary, remove the following.

      (1) Data plate (paragraph 4-22).

      (2) Fire extinguisher and bracket (paragraph 4-20).

(3) Side marker light and reflector (TM 9-2330-392-14&P).

b. Remove rivets (1, figure 5-20.2) and fender (2) from trailer chassis (3).

REPAIR

1. Floors.

Repair of floors consists of welding, straightening, and spot painting as required.

2 Fenders.

Repair of fenders consists of welding, straightening, and spot painting as required, and replacement of rivets (4), fender angle support (5), and tail light bracket (6).

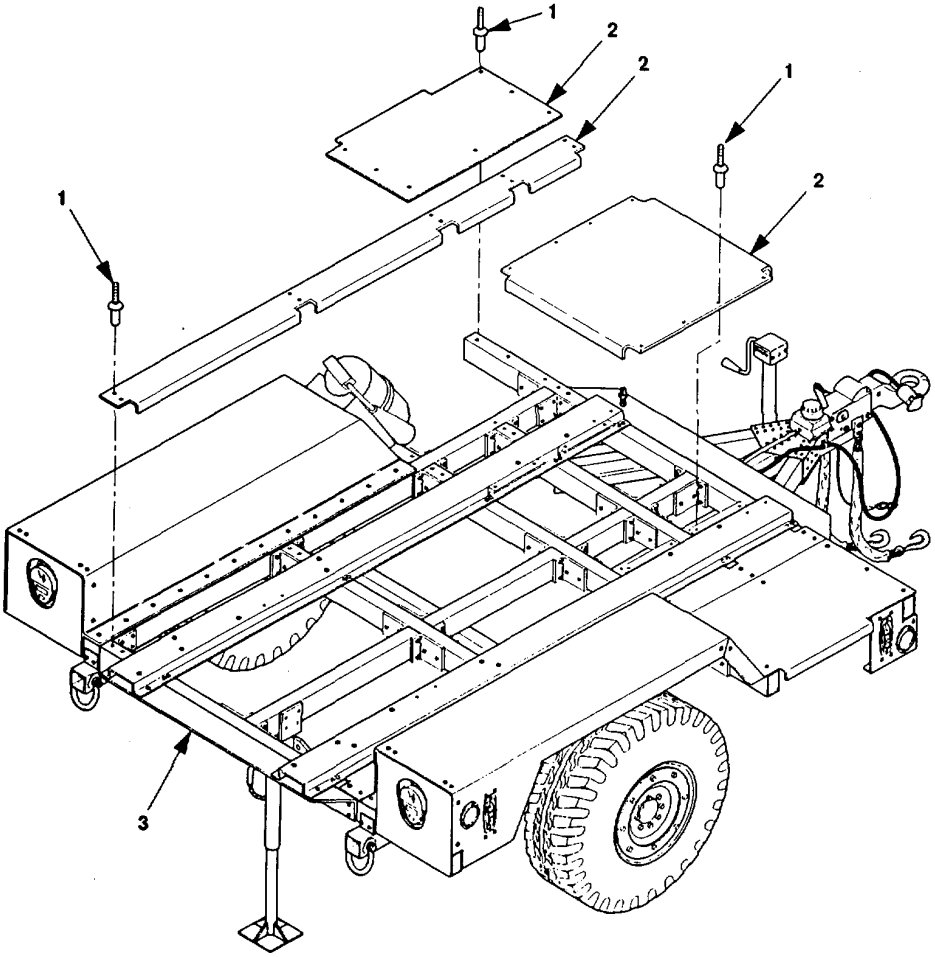

Figure 5-20.1. PU-797A and AN/MJQ-35A Floor Replacement.

INSTALLATION

1. Floors.

Place floor section (2, figure 5-20.1) on trailer chassis (3) and secure with rivets (1).

2. Fenders.

   a. Place fender (2, figure 5-20.2) on trailer chassis (3) and secure with rivets (1).

   b. If removed, install the following.

      (1) Data plate (paragraph 4-22).

      (2) Fire extinguisher and bracket (paragraph 4-20).

      (3) Side marker light and reflector (TM 9-2330-392-14&P).

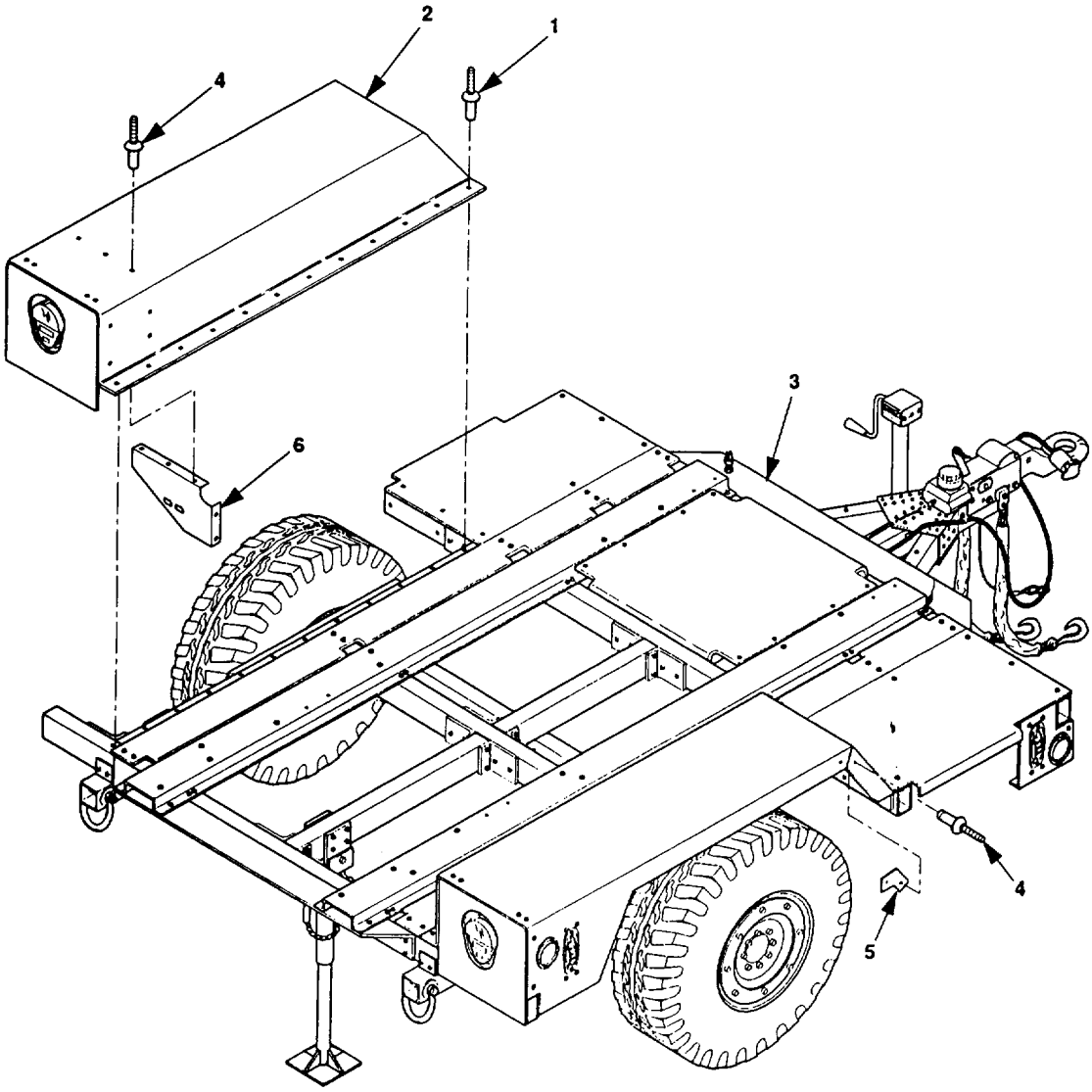

Figure 5-20.2. PU-797A and AN/MJQ-35A Fender Replacement.

5-17 AN/MJQ-35, AN/MJQ-36, AND PU-797 TRAILER FENDER REPAIR .

This task covers: Repair

INITIAL SETUP

Tools

Tool Kit, General Mechanic's (item 1, appendix B)
Body and Fender Repair Tool Kit (item 6, appendix B)
Shop Equipment, Welding, Field (item 7, appendix B)

Equipment Conditions

Reference

AN/MJQ-35 fenders removed; paragraph 4-23. AN/MJQ-36 fenders removed; paragraph 4-26. PU-797 fenders removed; paragraph 4-25.

Materials/Parts

Paint

REPAIR

Repair of the trailer fender consists of welding, straightening, and spot painting as required.

5-18 AN/MJQ-35 GENERATOR MOUNTING RAIL MAINTENANCE.

This task covers: a. Removal b. Repair c. Installation

INITIAL SETUP

Tools

Tool Kit, General Mechanic's (item 1, appendix B)
Tool, Blind Nut (item 2, appendix B)

Materials/Parts

Nuts, Self-locking
Nuts, Blind

Equipment Conditions

Reference

Trailer handbrakes set, front support leg/landing leg lowered, and rear leveling-support jack lowered; paragraph 2-3.2.1.

Appropriate generator set removed; paragraph 5-6. Accessory box removed (AN/MJQ-35 curbside rear generator rail); paragraph 4-19. Roadside splash guard removed (AN/MJQ-35); paragraph 4-23.

REMOVAL

NOTE

Rails may be shimmed; note location and quantity. Mounting hardware quantity may vary depending on mounting rail being removed.

Remove self-locking nuts (3, figure 5-21), flat washers (2), cap screws (1), and mounting rail (4).

REPAIR

NOTE

Blind nuts are located at rear of mounting rails for rear generator.

Repair of mounting rails consists of replacing blind nuts (5). Refer to instructions supplied with blind nut tool.

INSTALLATION

Install mounting rail (4), cap screws (1), flat washers (2), and self-locking nuts (3) on trailer chassis (6).

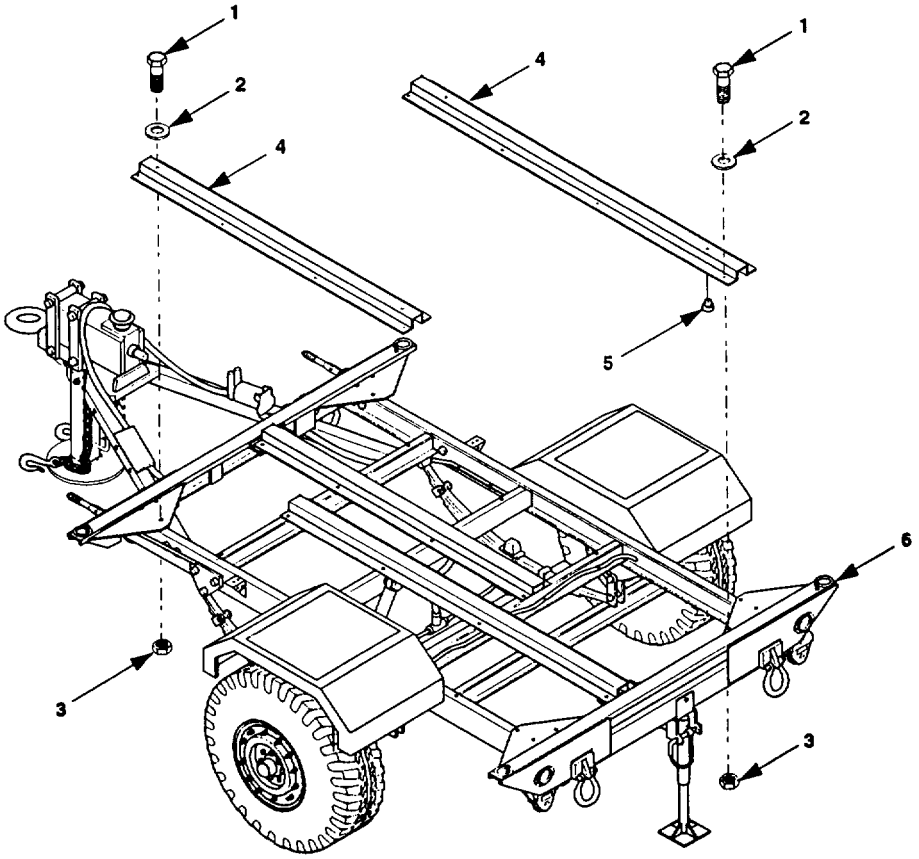

Figure 5-21. Replace AN/MIQ-35 Generator Mounting Rail.

5-19 AN/MJQ-35 GENERATOR MOUNTING RAIL MAINTENANCE

This task covers:
a. Removal
b. Repair
c. Installation

INITIAL SETUP

Tools

Tool Kit, General Mechanic's (item 1, appendix B)
Tool, Blind Nut (item 2, appendix B)

Materials/Parts

Nuts, Self-locking
Nuts, Blind

Equipment Conditions

Reference

Trailer handbrakes set, front support leg/landing leg lowered, and rear leveling-support jack lowered; paragraph 2-3.2.1.
Both generator sets removed paragraph 5-6.
Accessory box removed; paragraph 4-19.
Fenders and platform removed; paragraph 4-25.

REMOVAL

NOTE

Rails may be shimed; note location and quantity. Mounting hardware quantity may vary depending on mounting rail being removed. Longer bolts are used at front end of mounting rails.

Remove self-locking nuts (1, figure 5-22), flat washers (2), cap screws (3) and mounting rail (4).

REPAIR

NOTE

Blind nuts are located at front end of both mounting rails.

Repair of mounting rails consists of replacing blind nuts (5). Refer to instructions supplied with blind nut tool.

INSTALLATION

Position mounting rail (4) on trailer and loosely install cap screws (3), flat washers (2), self-locking nuts (1), then tighten.

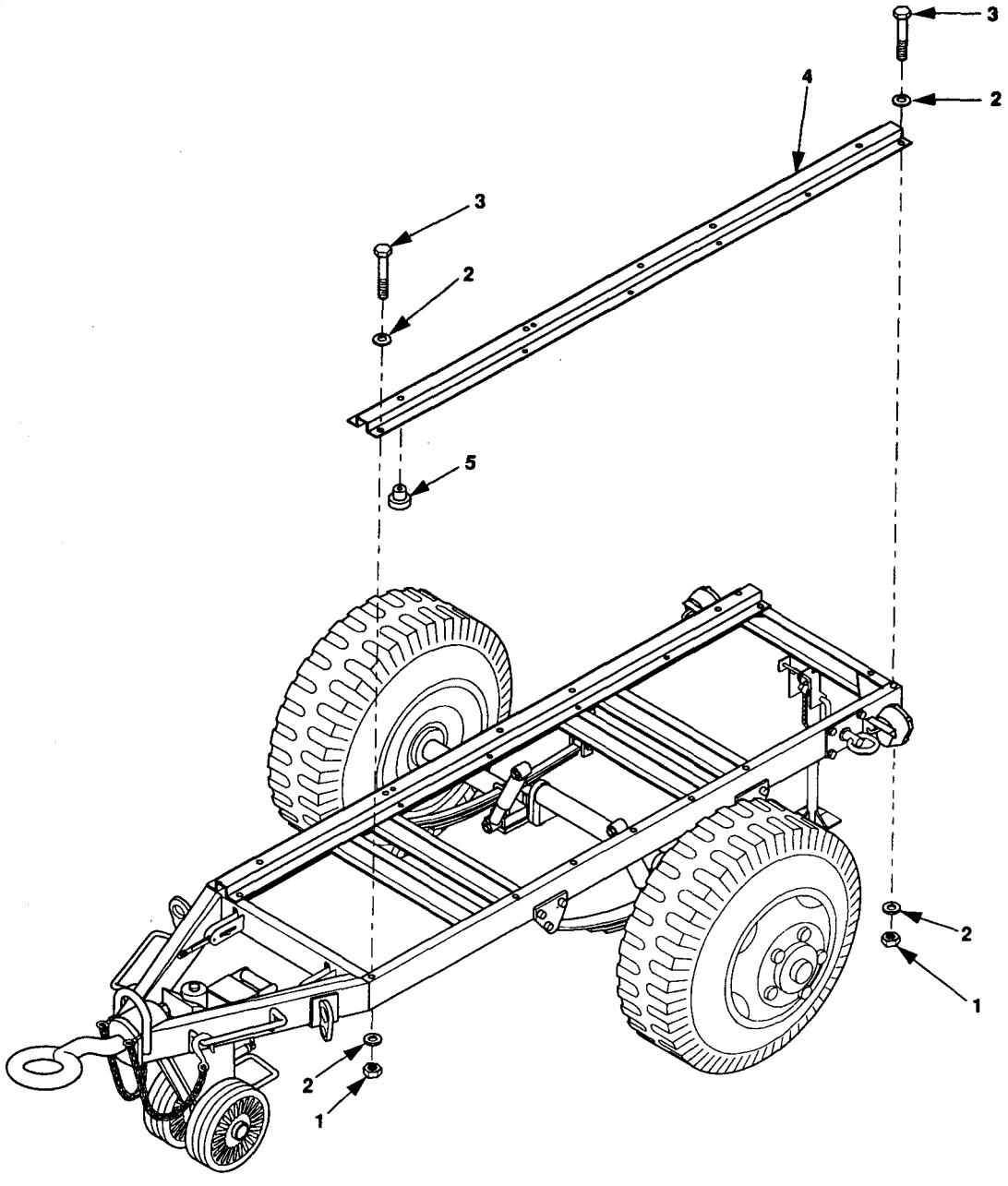

Figure 5-22. Replace AN/WJQ-36 Generator Mounting Rail.

5-20 PU-797 GENERATOR MOUNTING RAIL MAINTENANCE.

This task covers: a. Removal b. Installation

INITIAL SETUP

Tools

Tool Kit, General Mechanic's (item 1, appendix B)

Materials/Parts

Nuts, Self-locking

Equipment Conditions

Reference

Trailer handbrakes set, front support leg/landing leg lowered, and rear leveling-support jack lowered; paragraph 2-3.2.1.

Generator set removed; paragraph 5-6.
Accessory box removed; paragraph 4-19.
Front platform removed; paragraph 4-24.

REMOVAL

Remove self-locking nuts (4, figure 5-23), flat washera (2), cap screws (1), and mounting rail (3).

INSTALLATION

Install mounting rail (3), cap screws (1), flat washers (2), and self-locking nuts (4).

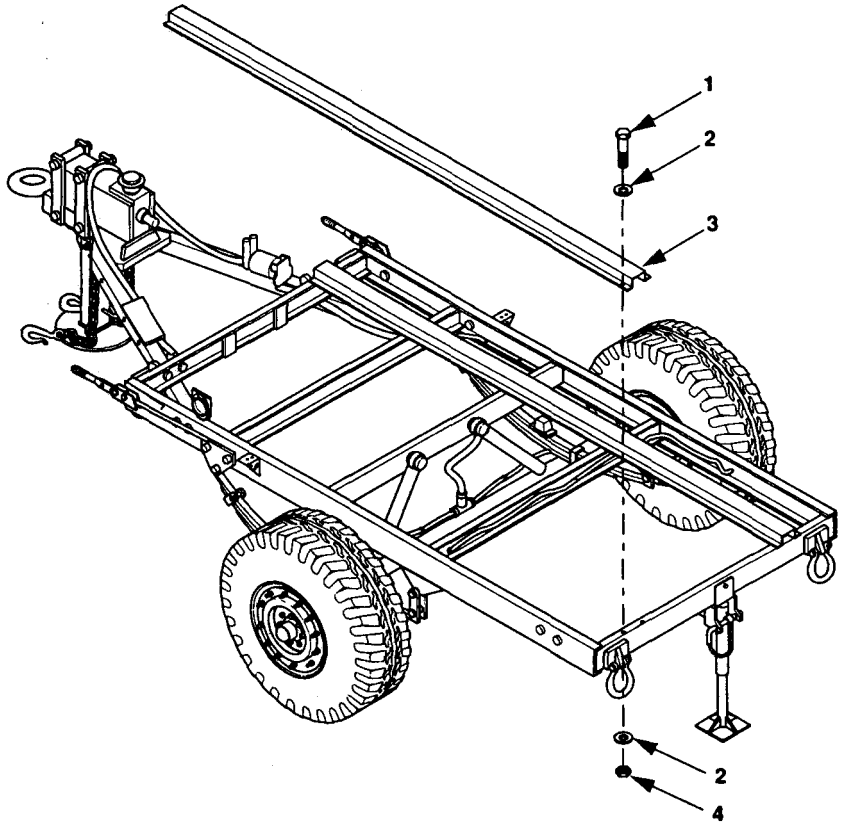

Figure 5-23. Replace PU-797 Generator Mounting Rail.

5-21 AN/MJQ-35 TRAILER LIFTING BRACKET MAINTENANCE.

This task covers: a. Removal b. Installation

INITIAL SETUP

Tools
Tool Kit, General Mechanic's (item 1, appendix)
Jack Stands (item 2, appendix B)

Materials/Parts

Nuts, Self-locking

Equipment Conditions

Reference

Trailer handbrakes set, front support leg/landing leg lowered, and rear leveling-support jack lowered paragraph 2-3.2.1.

Front generator set removed (if front lifting bracket is being removed); paragraph 5-6.
Rear generator set removed (if rear lifting bracket is being removed); paragraph 5-6.

Equipment Conditions - continued

Rear mounting rails removed (if rear lifting bracket is being replaced); paragraph 5-10.
Accessory box removed (if front lifting bracket is being replaced), paragraph 4-19.
Front mounting rails removed (if front lifting bracket is being replaced), para 5-10.

Personnel Required

Two

REMOVAL

1. REMOVE FRONT LIFTING BRACKET.

NOTE

If replacing front lifting bracket, proceed to step a. If removing front lifting bracket, proceed to step b.

a. Remove lifting rings (paragraph 4-21).

WARNING

Rear of trailer must be supported with jack stands to prevent trailer from tipping. Failure to observe this warning could result in severe personal injury or death.

b. Separate the power cable from front lifting bracket (2) by removing nut (20, figure 5-24 flat washer (19), and screw (18) from cable clamp (21).

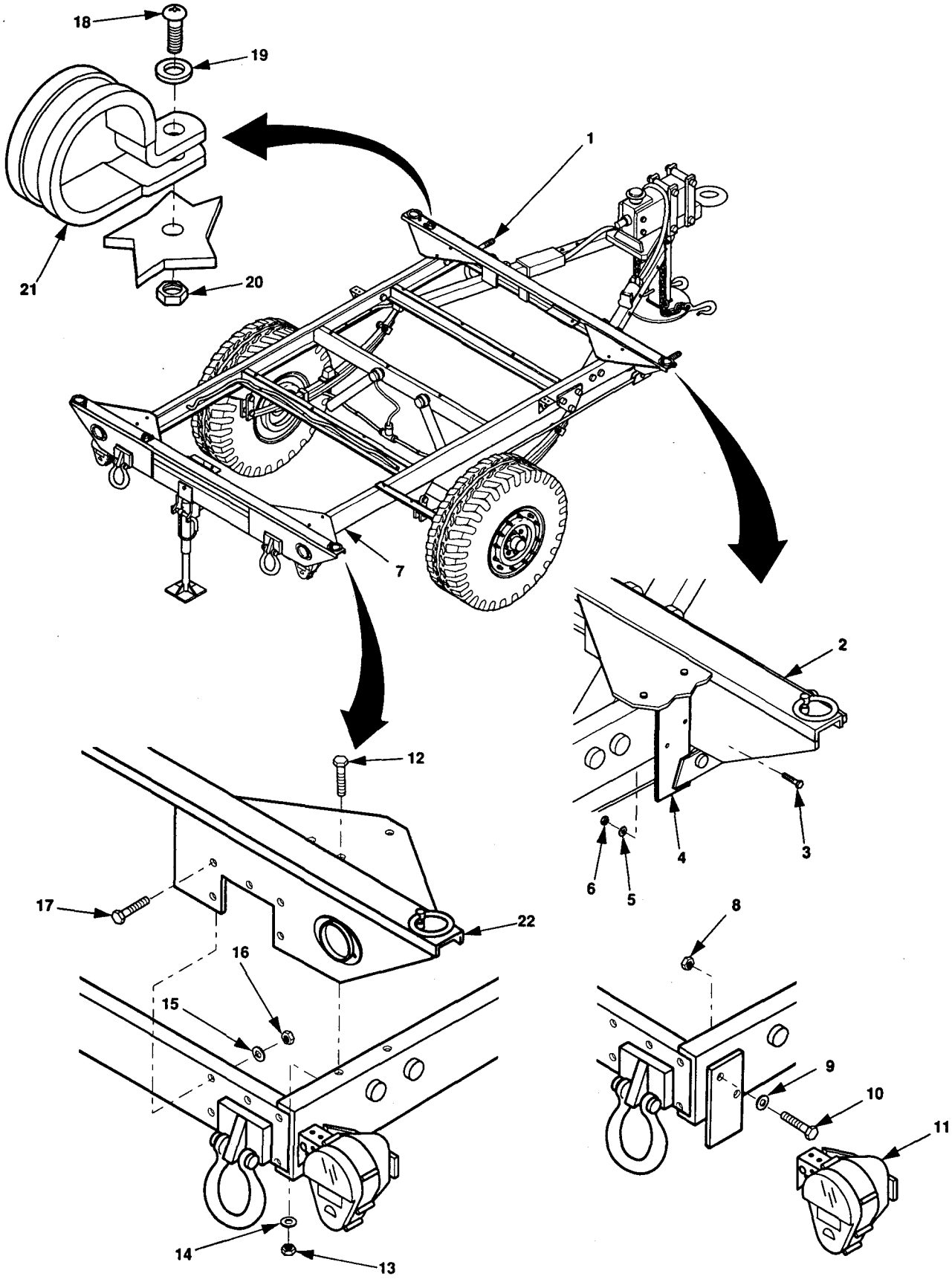

Figure 5-24. AN/MJQ-35 Trailer Lifting Bracket.

WARNING

Chock wheels to prevent trailer from rolling. Failure to observe this warning could result in severe personal injury or death.

c. Release handbrakes (1).

d. Separate brake relocating brackets (4) from frame by removing two self-locking nuts (6), flat washers (5), and cap screws (3).

e. Remove ten self-locking nuts (16), flat washers (15), and cap screws (17) from front lifting bracket (2).

f. Remove three self-locking nuts (13), flat washers (14), and cap screws (12) that attach front lifting bracket (2) to top of frame.

g. Remove front lifting bracket (2).

2. REMOVE REAR LIFTING BRACKET.

NOTE

If replacing rear lifting bracket, proceed to step a. If removing rear lifting bracket, proceed to step b.

a. Remove lifting rings (paragraph 4-21) and reflectors (paragraph 4-22).

b. Separate the tail light bracket (11) from trailer chassis by removing two self-locking nuts (8), flat washers (9), and screws (10).

c. Separate the power cable from rear lifting bracket (22) by removing nut (20, figure 5-24), flat washer (19), and screw (18) from cable clamp (21).

d. Remove ten self-locking nuts (16), flat washers (15), and cap screws (17) from rear lifting bracket (22).

NOTE

Two sets of attaching hardware used on roadside and curbside top of bracket are removed when splash guard is removed.

d. Remove screw (12), flat washer (14), and self-locking nut (13) from inboard top hole of rear lifting bracket (22).

e. Remove rear lifting bracket (22).

INSTALLATION

1. INSTALL FRONT LIFIING BRACKET.

a. Position front lifting bracket (2) on trailer chassis (7).

b. Loosely install ten cap screws (17), flat washers (15), and self-locking nuts (16) in front lifting bracket (2).

c. Loosely install three cap screws (12), flat washers (14), and self-locking nuts (13) to attach front lifting bracket (2) to top of curbside front corner of trailer chassis (7).

d. Install mounting rails (paragraph 5-18).

NOTE

Loosely installed screws (12 and 17) will aid in alignment of holes in handbrake bracket.

e. Position brake relocating brackets (4), with attached handbrake lever (1), and loosely install four cap screws (3), flat washers (5), and self-locking nuts (6).

f. Tighten all self-locking nuts installed in steps b. through e.

g. Install front generator set (paragraph 5-6).

h. If front lifting bracket is a replacement, install lifting rings (paragraph 4-21).

i. Position power cable clamp (21) and install screw (18), flat washer (19), and nut (20).

j. Set trailer handbrakes and remove wheel chocks.

k. Remove jack stands.

2. INSTALL REAR LIFTING BRACKET.

a. Position rear lifting bracket (22) on trailer chassis (7).

b. Loosely install ten cap screws (17), flat washers (15), and self-locking nuts (16) in rar lifting bracket (22).

NOTE

Two sets of attaching hardware used on roadside and curbside top of bracket are installed when splash guard is installed.

c. Loosely install cap screw (10), flat washer (14), and self-locking nut (13) to attach rear lifting bracket (22) to top of trailer chassis (7).

NOTE

Loosely installed screws (12 and 17) will aid in alignment of holes in handbrake bracket.

d. Install tail light bracket (11), two screws (10), flat washers (9), and self-locking nuts (8).

e. Tighten all self-locking nuts installed in steps b. and c.

f. Install rear generator set (paragraph 5-6).

g. If rear lifting bracket is a replacement, install lifting rings (paragraph 4-21) and reflectors (paragraph 4-22).

h. Position power cable clamp (21) and install screw (18), flat washer (19), and nut (20).

5-22 PU-797A AND AN/MJQ-35A GENERATOR MOUNTING RAIL MAINTENANCE.

This task covers: a. Removal b. Repair c. Installation

~~INITIAL SETUP~~

Tools	Equipment Conditions
Tool Kit, General Mechanic's (item 1, appendix B) Rivet Gun (item 8, appendix B)	Reference Trailer handbrakes set, front support leg/landing leg lowered, and rear leveling-support jack lowered; paragraph 2-3.2.1. Accessory box removed; paragraph 4-19. Generator set removed; paragraph 5-6. Center floor removed; paragraph 5-16.1.
Materials/Parts	
Rivets (items 6, 8, 9, and 10, appendix I)	

REMOVAL

~~Remove riv~~ets (1 and 2, figure 5-25) and mounting rail (3) from trailer chassis (4).

REPAIR

~~Repair of~~ generator mounting rails consists of replacing rivets (5) and doubler plates (6 and 7), and rivets (8) and angle supports (9 and 10) as required.

INSTALLATION

Place mounting rail (3) on trailer chassis (4) and secure with rivets (1 and 2).

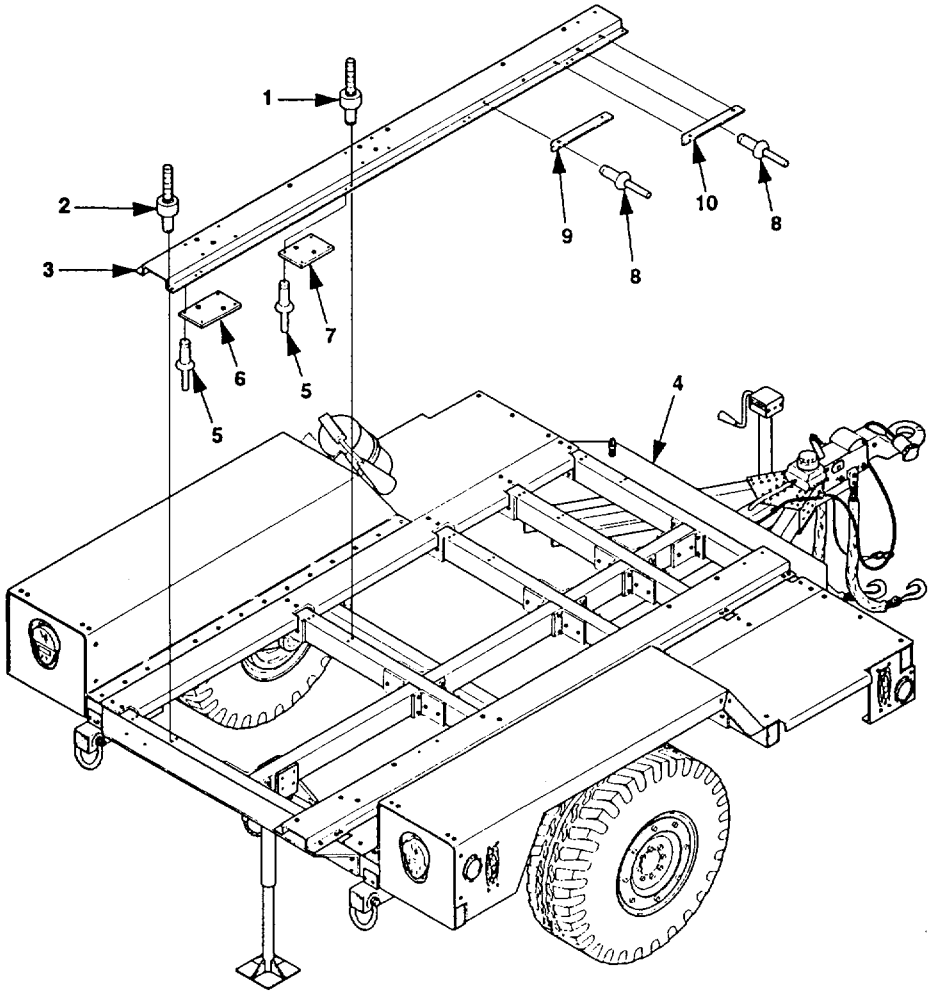

Figure 5-25. PU-797A and AN/MJQ-35A Generator Mounting Rail Replacement.

5-23 HIGH MOBILITY TRAILER REAR LEVELING-SUPPORT JACK MAINTENANCE.

This task covers: a. Removal b. Repair c. Installation

INITIAL SETUP

Tools

Tool Kit, General Mechanic's (item 1, appendix B)
Jack Stand (item 2, appendix B)

Materials/Parts

Pin, Cotter
Pin, Spring
Fitting, Lubrication (if needed)

Materials/Parts - continued

Grease, GAA (item 2, Appendix E)
Rivets (item 11, appendix I)

Equipment Conditions

Reference

Trailer handbrakes set and front support leg/landing leg lowered; paragraph 2-3.2.1.
Both generator sets shut down; paragraph 2-5.3.3

REMOVAL

WARNING

Before removing trailer leveling-support jack, support rear of trailer with jack stands. Failure to observe this warning can cause severe personal injury or death.

1. Support rear of trailer with jack stands.
2. Turn leg base (1, figure 5-26) to take weight off leg prop.
3. Remove either one of two cotter pins (2 or 3) from pivot shaft (4) and discard cotter pin.
4. Hold leg base (1) steady and remove pivot shaft (4) with remaining cotter pin in place.
5. Lift leg base (1) slightly to take weight off retaining pin (5) and remove retaining pin. Move leg base (1) and attached parts out of bracket (7).
6. Remove three rivets (6) and bracket (7) from trailer chassis (8).

REPAIR

Refer to paragraph 4-27.

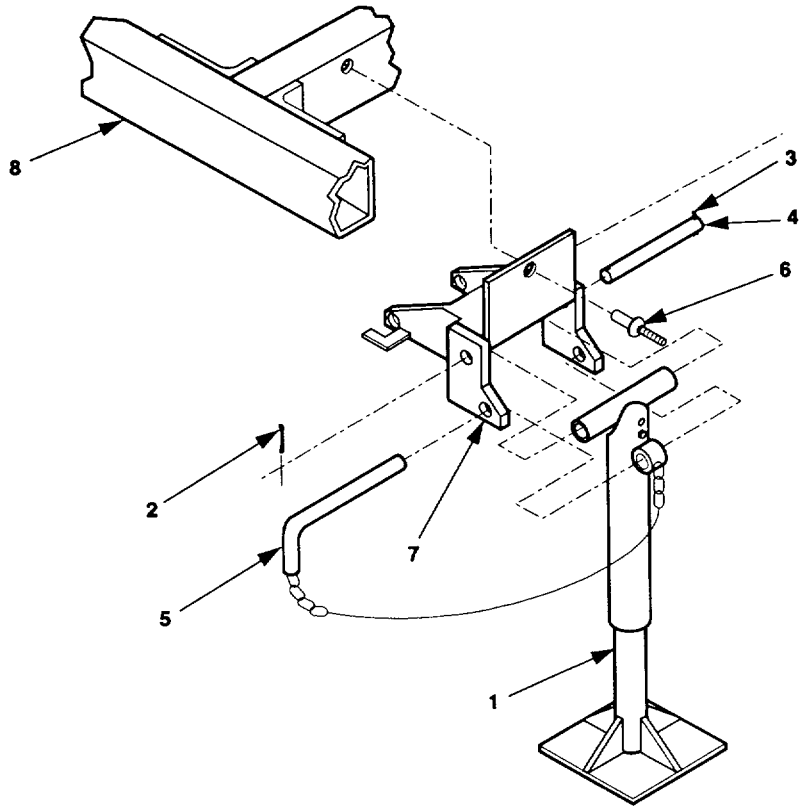

Figure 5-26. Rear Leveling-Support Jack Replacement, High Mobility Trailer.

INSTALLATION

1. Install bracket (7) on trailer chassis (8), with three rivets (6).
2. Position leg base (1) and attached parts in bracket (7) and install retaining pin (5).
3. Position leg base (1) and install pivot shaft (4).
4. Install new cotter pin (2 or 3) in pivot shaft (4).
5. Lube rear leveling-support jack.

APPENDIX A

REFERENCES

A-1 SCOPE.

This appendix lists all forms, regulations, pamphlets, specifications, standards, technical manuals, lubrication orders, and field manuals referenced in this manual.

A-2 FORMS.

Recommended Changes to Publications and Blank Forms . . . . . DA Form 2028

Recommended Changes to Equipment Technical Publications . . . . . DA Form 2028-2

Depreservation Guide for Vehicles and Equipment . . . . . DA Form 2258

Equipment Inspection and Maintenance Worksheet . . . . . DA Form 2404

Packaging Improvement Report . . . . . DD Form 6

Product Quality Deficiency Report . . . . . SF 368

A-3 ARMY REGULATIONS.

Dictionary of United States Army Terms . . . . . AR 310-25

A-4 DEPARTMENT OF THE ARMY PAMPHLETS.

The Army Maintenance Management System (TAMMS) . . . . . DA PAM 738-750

A-5 MILITARY SPECIFICATIONS.

Preservation, Methods of MIL-P-116

Barner Materials, Transparent, Flexible, Heat Sealable MIL-B-22191

Generator Sets, Mobile Electric Power; Packaging of MIL-G-28554

A-6 FEDERAL SPECIFICATIONS.

Plywood, Flat Panel NN-P-530

Paperboard, Wrapping and Cushioning PPP-P-291

Boxes, Wood, Cleated Plywood PPP-B-601

Tape, Packaging, Paper (for Carton Sealing) PPP-T-76

Strapping, Steel, and Seals QQ-S-781

A-7 MILITARY STANDARDS.

Abbreviations for Use on Drawings, and in Specifications, Standards and Technical Documents MIL-STD-12

Marking for Shipment and Storage MILSTD-129

Standard Requirements for Soldered Electrical and Electronic Assemblies MIL-STD-2000

A-8 TECHNICAL MANUALS.

Operator's, Organizational, Direct Support and General Support Maintenance Manual (Including Repair Parts and Special Tools Lists),
Trailer: Cargo 3/4-Ton, 2-Wheel,
M101 (NSN 2330-00-738-9509)
M101A1 (NSN 2330-00-898-6779)
M101A2 (NSN 2330-01-1014697)
Chassis: Trailer 3/4-Ton, 2-Wheel,
M116 (NSN 2330-00-542-5987)
M116A1 (NSN 2330-00-898-6780)
M116A2 (NSN 2330-01-101-8434) ..... TM 9-2330-202-14&P

Operator's, Organizational, Direct Support and General Support Maintenance Manual (Including Repair Parts and Special Tools List),
Chassis Trailer: 1 1/2-Ton, 2-wheel,
M103A1 (NSN 2330-00-835-8629),
M103A2 (NSN 2330-00-049-8050),
M103A3 (NSN 2330-00-141-8052),
M103A3C (NSN 2330-00-542-2181),
M103A4 (NSN 2330-00-141-8051)
Trailer, Cargo: 1 1/2-ton, 2-wheel,
M105A1 (NSN 2330-00-835-8631),
M105A2 (NSN 2330-00-141-8050),
M105A2C (NSN 2330-00-542-5689)
Trailer, Tank, Water: 1 1/2-ton, 2-wheel, 400-gallon,
M107A1 (NSN 2330-00-835-8633),
M107A2 (NSN 2330-00-141-8049),
M107A2C (NSN 2330-00-542-5688)
Trailer, Van, Shop: Folding Sides, 1 1/2-ton, 2-wheel,
M448 (NSN 2330-00-631-5692) ..... TM 9-2330-213-14&P

Operator's, Organizational, Direct Support and General Support Maintenance Manual (Including Repair Parts and Special Tools List),
Trailer, Cargo: 2000 Pounds, 2-wheel, M1101 (NSN 2330-01-387-5443)
Trailer, Cargo: 2800 Pounds, 2-wheel, M1102 (NSN 2330-01-387-5426)
Trailer, Chassis: 3072 Pounds, 2-wheel, (NSN 2330-01-387-5424) TM 9-2330-392-14&P

Organizational, Direct Support, and General Support Maintenance. Care, Maintenance and Repair of Pneumatic Tires and Inner Tubes ..... TM 9-2610-200-24

Unit, Direct Support and General Support Maintenance Instructions, Diesel Engine, Model No.: DN2M, 2 Cylinder .93 Liter ..... TM 9-2815-252-24

Operator's Manual, Generator Set, Skid Mounted, Tactical Quiet, 5 kW, 60/400 Hz
MEP-802A (60 Hz) 6115-01-274-7387
MEP-812A (400 Hz) 6115-01-274-7391 ..... TM 9-6115-641-10

Unit, Direct Support and General Support Maintenance Manual, Generator Set,
Skid Mounted, Tactical Quiet, 5 kW, 60/400 Hz
MEP-802A (60 Hz) 6115-01-274-7387
MEP-812A (400 Hz) 6115-01-274-7391 ..... TM 9-6115-641-24

Repair Parts and Special Tools List: Generator Set, Tactical Quiet,
5 kW, 60/400 Hz ..... TM 9-6115-641-24P
Repair Parts and Special Tools List: Diesel Engine, Model No. DN2M,
2 Cylinder .93 Liter ..... TM 9-2815-252-24P

Procedures for Destruction of Equipment to Prevent Enemy Use
(Mobility Equipment Command) ..... TM 750-244-3

A-9 LUBRICATION ORDERS.

Lubrication Order: Generator Set, Skid Mounted, Tactical Quiet, 5 kW,
MEP-802A (60 Hz), MEP-812A (400 Hz) ..... LO 9-6115-641-12

Lubrication Order: Diesel Engine, Model No.: DN2M, 2 Cylinder .93 Liter LO 9-2815-252-12

A-10 FIELD MANUALS.

Electrical Power Generation in the Field ..... FM 20-31

First Aid ..... FM 21-11

APPENDIX B

MAINTENANCE ALLOCATION CHART

Section I. INTRODUCTION

B-1 GENERAL.

B-1.1 This section provides a general explanation of all maintenance and repair functions authorized at various maintenance levels.

B-1.2 The Maintenance Allocation Chart (MAC) in section II designates overall authority and responsibility for the performance of maintenance functions on the identified end item or component. The application of the maintenance functions to the end item or component will be consistent with the capacities and capabilities of the designated maintenance levels.

B-1.3 Section III lists the tools and test equipment (both special tools and common tool sets) required for each maintenance fimction as referenced from section II.

B-1.4 Section IV contains supplemental instructions and explanatory notes for a particular maintenance fimction.

B-2 MAINTENANCE FUNCITONS.

Maintenance functions will be limited to and defined as follows:

B-2.1 Inspect To determine the serviceability of an item by comparing its physical, mechanical, and/or electrical characteristics with established standards through examination (e.g., by sight, sound, or feel).

B-2.2 Test. To verify serviceability by measuring the mechanical, pneumatic, hydraulic, or electrical characteristics of an item and comparing those characteristics with prescribed standards.

B-2.3 Service. Operations required periodically to keep an item in proper operating condition, i.e., to clean (includes decontaminate, when required), to preserve, to drain, to paint, or to replenish fuel, lubricants, chemical fluids, or gases.

B-24 Adjust. To maintain or regulate, within prescribed limits, by bringing into proper or exact position, or by setting the operating characteristics to specified parameters.

B-2.5 Aline. To adjust specified variable elements of an item to bring about optimum or desired performance.

B-2.6 Calibrate. To determine and cause corrections to be made or to be adjusted on instruments or test, measuring, and diagnostic equipments used in precision measurement. Consists of comparisons of two instruments, one of which is a certified standard of known accuracy, to detect and adjust any discrepancy in the accuracy of the instrument being compared.

B-2.7 Remove/Install. To remove and install the same item when required to perform service or other maintenance functions. Install may be the act of placing, seating, or fixing into position a spare, repair part, or module (component or assembly) in a manner to allow the proper functioning of an equipment or system.

B-2.8 Replace. To remove an unserviceable item and install a serviceable counterpart in its place. "Replace" is authorized by the MAC and is shown as the 3d position code of the SMR code.

B-2.9 Repair. The application of maintenance services[1], including fault location/troubleshooting[2], removal/installation, and disassembly/assembly[3] procedures, and maintenance actions[4] to identify troubles and restore serviceability to an item by correcting specific damage, fault, malfunction, or failure in a part, subassembly, module (component or assembly), end item, or system.

B-2.10 Overhaul. That maintenance. effort (service/action) prescribed to restore an item to a completely serviceable/operational condition as required by maintenance standards in appropriate technical publication (i.e., DMWR). Overhaul does not normally return an item to like new condition.

B-2.11 Rebuild. Consists of those services/actions necessary for the restoration of unserviceable equipment to a like new condition in accordance with original manufacturing standards. Rebuild is the highest degree of materiel maintenance applied to Army equipment. The rebuild operation includes the act of returning to zero those age measurement (hour/miles, etc.) considered in classifying Army equipment/components.

B-3 EXPLANATION OF COLUMNS IN THE MAC, SECTION II.

B-3.1 Column 1, Group Number. Column 1 lists functional group code numbers, the purpose of which is to identifi maintenance significant components, assemblies, subassemblies, and modules with the next higher assembly. End item group number shall be "00."

B-3.2 Column 2, Component/Assembly. Column 2 contains the names of components, assemblies, subassemblies, and modules for which maintenance is authorized.

B-3.3 Column 3, Maintenance Function. Column 3 lists the functions to be performed on the item listed in Column 2. (For detailed explanation of these functions, see paragraph B-2.)

B-3.4 Column 4, Maintenance Level. Column 4 specifies, by the listing of a work time figure in the appropriate subcolumn(s), the level of maintenance authorized to perform the function listed in Column 3. This figure represents the active time required to perform that maintenance function at the indicated level of maintenance. If the number or complexity of the tasks within the listed maintenance function vary at different maintenance levels, appropriate work time figures will be shown for each level. The work time figure represents the average time required to restore an item (assembly, subassembly, component, module, end item, or system) to a serviceable condition under typical field operating conditions. This time includes preparation time (including any necessary disassembly/assembly time), troubleshooting/fault

---

[1]*Services - inspect, test, service, adjust, aline, calibrate, and/or replace.*

[2]*Fault locate/troubleshoot - The process of investigating and detecting the cause of equipment malfunctioning; the act of isolating a fault within a system or unit under test (UUT).*

[3]*Disassemble/assemble - encompasses the step-by-step taking apart (or breakdown) of a spare/functional group coded item to the level of its least componency identified as maintenance significant (i.e., assigned an SMR code) for the level of maintenance under consideration.*

[4]*Actions - welding, grinding, riveting, straightening, facing, remachinery, and/or resurfacing.*

location time, and quality assurance/quality control time in addition to the time required to perform the specific tasks identified for the maintenance functions authorized in the maintenance allocation chart. The symbol designations for the various maintenance levels are as follows:

C ..... Operator or crew

O ..... Unit Maintenance

F ..... Direct Support Maintenance

H ..... General Support Maintenance

L ..... Specialized Repair Activity (SRA)[5]

D ..... Depot maintenance

B-3.5 Column 5, Tools and Equipment. Column 5 specifies, by code, those common tool sets (not individual tools) and special tools, TMDE, and support equipment required to perform the designated function.

B-3.6 Column 6. Remarks. This column shall, when applicable, contain a letter code, in alphabetic order, which shall be keyed to the remarks contained in Section IV.

B-4 EXPLANATION OF COLUMNS IN TOOL AND TEST EQUIPMENT REQUIREMENTS, SECTION III.

B-4.1 Column 1, Reference Code. The tool and test equipment reference code correlates with a code used in the MAC, Section II, Column 5.

B-4.2 Column 2, Maintenance Level. The lowest level of maintenance authorized to use the tool or test equipment.

B-4.3 Column 3, Nomenclature. Name or identification of the tool or test equipment.

B-4.4 Column 4, National Stock Number. The National stock number of the tool or test equipment.

B-4.5 Column 5, Tool Number. The manufacturer's part number.

B-5 EXPLANATION OF COLUMNS IN REMARKS, SECTION IV.

B-5.1 Column 1. Reference Code. The code recorded in Column 6, Section II.

B-5.2 Column 2, Remarks. This column lists information pertinent to the maintenance function being performed as indicated in the MAC, Section II.

[5]This maintenance level is not included in Section II, column (4) of the Maintenance Allocation Chart. To identify functions to this category of maintenance, enter a work time figure in the "H" column of Section II, column (4), and use an associated reference code in the the Remarks column (6). Key the code to Section IV, Remarks, and explain the SRA complete repair application there. The explanatory remark(s) shall reference the specific Repair Parts and Special Tools List (RPSTL) TM which contains additional SRA criteria and the authorized spare parts.

Section II. MAINTENANCE ALLOCATION CHART FOR POWER UNITS AND POWER PLANTS

(1) GROUP NUMBER	(2) COMPONENT ASSEMBLY	(3) MAINTENANCE FUNCTION	(4) MAINTENANCE LEVEL UNIT C	UNIT O	DIRECT SUPPORT F	GENERAL SUPPORT H	DEPOT D	(5) TOOLS AND EQUIPMENT	(6) REMARKS
00	POWER PLANT/ POWER UNIT	INSPECT	0.2						A.B.C
			0.1						A.D
0100	GENERATOR SET	INSPECT	0.2	0.5					A
		TEST		1.0	1.0				F.G
		SERVICE	0.3	0.3					E.F.G
		ADJUST		0.3					F.G
		REPAIR		1.5	1.5				E.F.G
		REMOVE/INSTALL			1.5			1.3	
		REPLACE			1.5			1.3	J
0200	ELECTRICAL SYSTEM								B.C
0201	POWER CABLES	INSPECT		0.1					A
		TEST		0.3				1.2	
		REMOVE/INSTALL		0.5				1	
		REPAIR			1.1			1.3.4	K
		REPLACE		0.5				1	J
0202	SWITCH BOX ASSEMBLY	INSPECT	0.1	0.1					A
		REMOVE/INSTALL		0.5				1	
		REPAIR		0.3				1.5	
		REPLACE		0.5				1	J
020201	RELAY BOARD ASSEMBLY	TEST		1.0				1.3	
		REPAIR		1.0				1.3	
02020101	RELAYS	TEST		0.2				1.3	
		REMOVE/INSTALL		0.1				1	
		REPLACE		0.1				1	J
020202	RELAY, PERMISSIVE PARALLELING	TEST		1.0				1.3	
		REMOVE/INSTALL		0.5				1	
		REPLACE		0.5				1	J
020203	LIGHTS/LAMPS	TEST		0.2				1.2	
		REMOVE/INSTALL		0.2				1	
		REPAIR		0.3				1, 2	
		REPLACE		0.2				1	J
020204	SWITCHES	TEST		0.2				1.2	
		REMOVE/INSTALL		0.2				1	
		REPLACE		0.2				1	J
020205	LEADS/HARNESSES	TEST			0.3			1.3	
		REMOVE/INSTALL			0.4			1	
		REPAIR			0.9			1.3.4	
		REPLACE			0.4			1	J

Section II. MAINTENANCE ALLOCATION CHART FOR POWER UNITS AND POWER PLANTS (continued)

(1) GROUP NUMBER	(2) COMPONENT ASSEMBLY	(3) MAINTENANCE FUNCTION	(4) MAINTENANCE LEVEL UNIT C	UNIT O	DIRECT SUPPORT F	GENERAL SUPPORT H	DEPOT D	(5) TOOLS AND EQUIPMENT	(6) REMARKS
020206	TERMINAL. LOAD	INSPECT	0.1	0.1					A
		REMOVE/INSTALL		0.5				1	
		REPAIR		0.2				1	
		REPLACE		0.5				1	J
020207	CONTACTOR	TEST		0.2				1,3	
		REMOVE/INSTALL		0.5				1	
		REPLACE		0.5				1	J
020208	RESISTORS	TEST		0.2				1,3	
		REPLACE		0.4				1	
0300	ACCESSORIES	INSPECT	0.1						A,B,C,D, L, M
0301	BOX., ACCESSORY	INSPECT	0.1						A
		REMOVE/INSTALL		0.2				1	
		REPAIR		0.5				1.5	
		REPLACE		0.2				1	J
0302	FIRE EXTINGUISHER/ BRACKET	INSPECT	0.1	0.1					A
		REMOVE/INSTALL		0.2				1	
		REPLACE		0.2				1	J
0400	TRAILER ASSEMBLY	INSPECT	0.2	0.2					A,H,I,N
0401	FENDERS	REMOVE/INSTALL		1.5				1	D
				3.0				1	B.C
					2.0			1,8	L
					4.0			1,8	M
		REPAIR			2.0			1,6,7	D.L
					4.0			1,6, 7	B.C.M
		REPLACE		1.5				1	DJ.L
				3.0				1	B.CJ.M
					2.0			1,8	J.L
					4.0			1, 8	J.M
0402	TRAILER LEVELLING-SUPPORT JACK	INSPECT	0.1	A					
		SERVICE		0.2				1	A
		REMOVE/INSTALL		0.3				1	B.C.D
					0.5			1, 8	LM
		REPAIR		0.8				1	
		REPLACE		0.3				1	J
					0.5			1,8	J

Section III. TOOL AND TEST EQUIPMENT REQUIREMENTS FOR POWER UNITS AND POWER PLANTS

(1) TOOL OR TEST EQUIPMENT REF CODE	(2) MAINTENANCE LEVEL	(3) NOMENCLATURE STOCK NUMBER	(4) NATIONAL/NATO NUMBER	(5) TOOL
1	O, F	TOOL KIT. GENERAL MECHANIC'S	5180-00-177-7033	SC 5180-90-CL-N26
2	O	SHOP EQUIPMENT. AUTOMOTIVE MAINTENANCE AND REPAIR: ORGANIZATIONAL MAINTENANCE COMMON #1, LESS POWER	4910-00-754-0654	SC 4910-95-CL-A74
3	F	SHOP EQUIPMENT. ELECTRICAL REPAIR, SEMITRAILER MOUNTED:	4940-00-294-9517	SC 4940-95-CL-B05
4	F	CRIMPING TOOL. HYDRAULIC, WIRE SIZE 8 THRU 4/0	5130-00-762-9100	
5	O	RIVETER, BLIND HEAD	5120-00-148-5847	
6	F	TOOL KIT. BODY AND FENDER REPAIR	5180-00-357-7731	SC 5180-90-CL-N62
7	F	SHOP EQUIPMENT. WELDING. FIELD	3470.0G357-7268	SC 3470-95-CL-A08
8	F	RIVET GUN. PNEUMATIC		

Section IV. REMARKS

(1) REFERENCE CODE	(2) REMARKS
A	Preventive Maintenance Checks and Service (PMCS).
B	AN/MJQ35 only.
C	AN/MJQ-36 only.
D	PU-797 only.
E	Refer to TM 9-61 15641-10 for generator set operator maintenance.
F	Refer to TM 9-61 15641-24 for generator set unit and higher level maintenance.
G	Refer to TM 9-2815-252-24 for engine maintenance.
H	Refer to TM 9-2330-202-14&P for 1 ton trailer maintenance.
I	Refer to TM 9-2330-213-14&P for 1 1/2 ton trailer maintenance.
J	Replace Is the same as Removal and Installation.
K	Refer to Appendix G for repair.
L	PU-797A only.
M	AN/MJQ-35A only.
N	Refer to TM 9-6115392-14&P for high mobility trailer maintenance.

APPENDIX C
COMPONENTS OF END ITEM (COEI)
AND BASIC ISSUE ITEMS (BII) USTS

Section I. INTRODUCTION

C-1 SCOPE.

This appendix lists components of the end items and basic issue items for the power plant/power unit to help you inventory the items for safe and efficient operation of the equipment.

C-2 GENERAL.

The Components of End Item and Basic Issue Items (BII) Lists are divided into the following sections:

C-2.1 **Section II, Components of End Item**. This listing is for information purposes only, and is not authority to requisition replacements. These items are part of the power plant/power unit, but they are to be removed and separately packaged for transportation or shipment. As part of the end item, these items must be with the end item whenever it is issued or transferred between property accounts. Illustrations are furnished to help you find and identify the items.

C-2.2 **Section III, Basic Issue Items.** These essential items are required to place the power plant/power unit in operation, operate it, and to do emergency repairs. Although shipped separately packaged, BII must be with the power plant/power unit during operation and when it is transferred between property accounts. Listing these items is your authority to request/requisition them for replacement based on authorization of the end item by the TOE/MTOE. Illustrations are furnished to help you find and identify the items.

C-3 EXPLANATION OF COLUMNS.

C-3.1 **Column (1).** Column (1), Illus Number, gives you the number of the item illustrated.

C.3.2 **Column (2).** Column (2), National Stock Number, identifies the stock number of the item to be used for requisitioning purposes.

C-3.3 **Column (3).** Column (3), Description and Usable On Code, identifies the Federal item name (in all capital letters) followed by a minimum description when needed. The last line below the description is the CAGEC (commercial and Government entity code) (in parenthesis) and the part number. If the item you need is not the same for different models of the equipment, a Usable On Code will appear on the right side of the description column on the same line as the part number. These codes are identified below:

CODE	USED ON	CODE	USED ON
EVQ	AN/MJQ-35	EVR	PU-797
FMF	AN/MJQ-35A	FMK	PU-797A
ESP	AN/MJQ-36		

C-3.4 **Column (4).** Column (4), U/I (unit of issue), indicates how the item is issued for the National Stock Number shown in column two.

C-3.5 **Column (5).** Column (5), Qty Reqd, indicates the quantity required.

SECTION II. COMPONENTS OF END ITEM

(1) Illus Number	(2) National Stock Number	(3) Description CAGEC and Part Number	Usable On Code	(4) U/I	(5) Qty Reqd
		This section is not applicable to the power plants and power units.			

SECTION III. BASIC ISSUE ITEMS

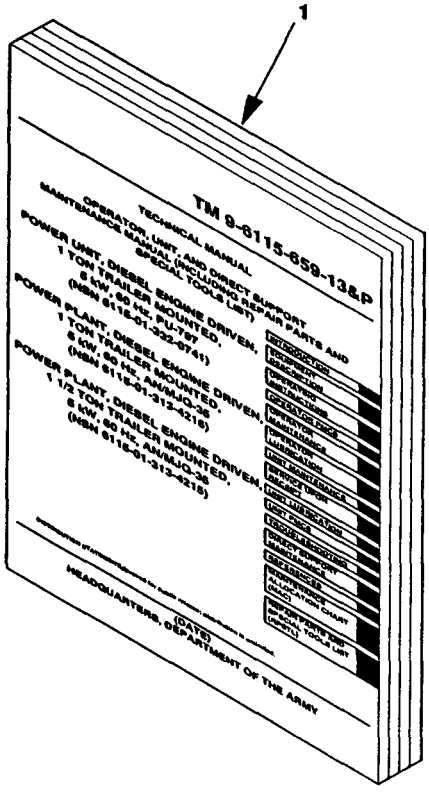

(1) Illus Number	(2) National Stock Number	(3) Description CAGEC and Part Number	Usable On Code	(4) U/I	(5) Qty Reqd
1		Manual, Technical, TM 9-6115-659-13&P		EA	1

APPENDIX D
ADDITIONAL AUTHORIZATION LIST

Section I. INTRODUCTION

D-1 SCOPE.

This appendix lists additional items you are authorized for the support of the power plant/power unit.

D-2 GENERAL.

This list identifies items that do not have to accompany the power plant/power unit and that do not have to be turned in with it. These items are all authorized to you by CTA, MTOE, TDA, or JTA.

D-3 EXPLANATION OF LISTING.

National stock numbers, descriptions, and quantities are provided to help you identify and request the additional items you require to support this equipment. The items are listed in alphabetical sequence by item name. If the item you require differs between serial numbers of the same model, effective serial numbers are shown in the last line of the description. If item required differs for different models of this equipment, the model is shown under the "Usable on" heading in the description column. These codes are identified as:

CODE	USED ON	CODE	USED ON
EVQ	AN/MJQ-35	EVR	PU-797
FMF	AN/MJQ-35A	FMK	PU-797A
ESP	AN/MJQ-36		

SECTION II. ADDITIONAL AUTHORIZED ITEMS LIST

(1) National Stock Number	(2) Description CAGEC and Part Number	Usable On Code	(3) U/I	(4) Qty Recm
5120-00-494-1911	WRENCH, PLIER, CURVED JAW (81348) GGG-W-00649, TYPE 1, CLASS 2, STYLE B		EA	2
7240-00-222-3088	CAN, GASOLINE, MILITARY (80372) 42-D-1280		EA	1
7240-00-177-6154	SPOUT, CAN, FLEXIBLE (81349) MIL-S-1285		EA	1

APPENDIX E
EXPENDABLE AND DURABLE ITEMS LIST

Section I. INTRODUCTION

E-1 SCOPE.

This appendix lists expendable and durable items that you will need to operate and maintain the AN/MJQ-35, AN/MJQ-35A, and AN/MJQ-36 Power Plants, and PU-797 and PU-797A Power Units. This listing is for information only and is not authority to requisition the listed items. These items are authorized to you by CTA 50-790, Expendable/Durable Items (except medical, class V repair parts, and heraldic items), or CTA 8-100, Army Medical Department Expendable/Durable Items.

E-2 EXPLANATION OF COLUMNS.

E-2.1 **Column 1 Item Number**. This number is assigned to the entry in the listing and is referenced in the narrative instructions to identify the item (e.g. "Use dry cleaning solvent A-A-711, item 1, Appendix E").

E-2.2 **Column 2. Level**. This column identifies the lowest level of maintenance that requires the item.

E-2.3 **Column 3. National Stock Number.** This is the national stock number assigned to the item, which you can use to requisition it.

E-2.4 **Column 4. Item Name, Description, Commercial and Government Entity Code (CAGEC), and Part Number**. This provides the other information you need to identify the item.

E-2.5 **Column 5. Unit of Measure.** This code shows the physical measurement or count of an item, such as gallon, dozen, gross, etc.

SECTION II.EXPENDABLE AND DURABLE ITEMS LIST

(1)		(2)	(4)	(5)
Item Number	Level	Stock Number	Description	U/M
1	O	6850-01-331-3349	DRY CLEANING SOLVENT, TYPE III, 5 GALLONS: (81349) P-D-680	G1
2	O	6850-01-331-3350	DRY CLEANING SOLVENT, TYPE III, 55 GALLONS: (81349) P-D-680	G1
3	O	9150-00-190-0904	GREASE, AUTOMOTIVE/ARTILLERY GAA (81349) MIL-G-10924	LB
4	O	9150-00-189-6727	OIL, LUBRICATION OE/HDO-10 (81349) MIL-D-2104	QT
5	O,F		SOLDER, SN60PB40 (81348)	S1
6	O,F	8040-00-664-4318	ADHESIVE, 9995460 (18876)	PT

APPENDIX F
UNIT AND DIRECT SUPPORT MAINTENANCE
REPAIR PARTS AND SPECIAL TOOLS LIST

Section I. INTRODUCTION

F-1 SCOPE.

This RPSTL lists and authorizes spares and repair parts; special tools; special test, measurement, and diagnostic equipment (TMDE); and other special support equipment required for performance of unit and direct support maintenance of the AN/MJQ-35, AN/MJQ-35A and AN/MJQ-36. Power Plants, and PU-797 and PU-797A Power Units. It authorizes the requisitioning, issue, and disposition of spares, repair parts and special tools as indicated by the source, maintenance and recoverability (SMR) codes.

F-2 GENERAL.

In addition to Section I, Introduction, the Repair Parts and Special Tools List is divided into the following sections:

F-2.1 **Section II. Repair Parts List**. A list of spares and repair parts authorized by this RPSTL for use in the performance of maintenance. The list also includes parts which must be removed for replacement of the authorized parts. Parts lists are composed of functional groups in ascending alphanumeric sequence, with the parts in each group listed in ascending figure and item number sequence. Bulk materials are listed by item name FIG BULK at the end of the section. Repair parts kits or sets are listed separately in their own functional group within Section II.

F-2.2 **Section III Special Tools List**. A list of special tools, special TMDE, and other special support equipment authorized by this RPSTL (as indicated by Basis of Issue (BOI) information in DESCRIPTION AND USABLE ON CODE (UOC) column) for the performance of maintenance. (There are no special tools for the Power Plants/Power Units.)

F-2.3 **Section IV. Cross-reference Indexes**. A list, in National item identification number (NIIN) sequence, of all National stock numbered items appearing in the listings, followed by a list in alphanumeric sequence of all part numbers appearing in the listing. National stock numbers and part numbers are cross-referenced to each illustration figure and item number appearance. The figure and item number index lists figure and item number in alphanumeric sequence and cross-references NSN, CAGEC and part number.

F-3 EXPLANATION OF COLUMNS (SECTIONS II and III).

F-3.1 **ITEM NO. (Column (1)).** Indicates the number used to identify items called out in the illustration.

F-3.2 SMR CODE (Columm (2)). The Source, Maintenance, and Recoverability (SMR) code is a 5-position code containing supply/requisitioning information, maintenance category authorization criteria, and disposition instruction, as shown in the following breakout:

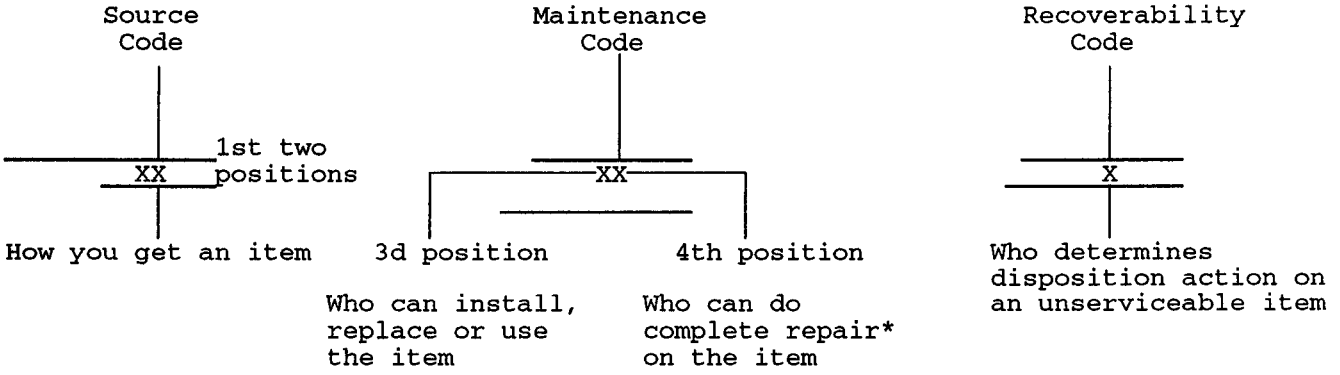

*Complete Repair: Maintenance capacity, capability, and authority to perform all corrective maintenance tasks of the "Repair" function in a use/user environment in order to restore serviceability to a failed item.

F-3.2.1 Source Code. The source code tells you how to get an item needed for maintenance, repair, or overhaul of an end item/equipment. Explanations of source codes follows:

Code	Explanation
PA PB PC** PD PE PF PG	Stocked items; use the applicable NSN to request/requisition items with these codes. They are authorized to the maintenance level indicated by the code entered in the 3d position of the SMR code. **NOTE: Items coded PC are subject to deterioration.
KD KF KB	Items with these codes are not to be requested/requisitioned individually. They are part of a kit which is authorized to the maintenance level indicated in the 3d position of the SMR code. The complete kit must be requisitioned and applied.
MO- (Made at Unit/ AVUM Level) MF- (Made at DS/ AVUM Level) MH- (Made at GS Level) ML- (Made at Specialized Repair Act (SRA)) MD- (Made at Depot)	Items with these codes are not to be requested/requisitioned individually. They must be made from bulk material which is identified by the part number in the DESCRIPTION AND USABLE ON CODE Bulk Material group of the repair parts list in the (UOC) column and listed in the Bulk Material group of the repair parts list in this RPSTL. If the item is authorized to you by the 3d position code of the SMR code, but the source code indicates it is made at a higher level, order the item from the higher level of maintenance.

Code		*Explanation*
AO-	(Assembled by Unit AVUM Level)	Items with these codes are not to be requested/ requisitioned individually. The parts that make up the assembled item must be requisitioned or fabricated and assembled at the level of maintenance indicated by the source code. If the 3d position code of the SMR code authorizes you to replace the item, but the source code indicates the item is assembled at a higher level, order the item from the higher level of maintenance.
AF-	(Assembled by DS AVUM Level)	
AH-	(Assembled by GS Level)	
AL-	(Assembled by SRA)	
AD-	(Assembled by Depot)	

XA - Do not requisition an "XA"-coded item. Order its next higher assembly. (Also, refer to the NOTE below.)
XB - If an "XB" item is not available from salvage, order it using the CAGEC and part number given.
XC - Installation drawing, diagram, instruction sheet, field service drawing, that is identified by manufacturer's part number.
XD - Item is not stocked. Order an "XD"-coded item through normal supply channels using the CAGEC and part number given, if no NSN is available.

NOTE: Cannibalization or controlled exchange, when authorized, maybe used as a source of supply for items with the above source codes, except for those source coded "X" or those aircraft support items restricted by requirements of AR 700-42.

F-3.2.2 Maintenance Code. Maintenance codes tells you the level(s) of maintenance authorized to USE and REPAIR support items. The maintenance codes are entered in the third and fourth positions of the SMR Code as follows:

F-3.2.2.1 The maintenance code entered in the third position tells you the lowest maintenance level authorized to remove, replace, and use an item. The maintenance code entered in the third position will indicate authorization to one of the following levels of maintenance.

Code	Application/Explanation
C	-Crew or operator maintenance done within unit or aviation unit maintenance.
O	-Unit or aviation unit level can remove, replace, and use the item.
F	-Direct support or aviation intermediate level can remove, replace, and use the item.
H	-General support level can remove, replace, and use the item.
L	-Specialized repair activity can remove, replace, and use the item.
D	-Depot level can remove, replace, and use the item.

F-3.2.2.2 The maintenance code entered in the fourth position tells whether or not the item is to be repaired and identifies the lowest maintenance level with the capability to do complete repair (i.e., perform all authorized repair functions.) (NOTE: Some limited repair may be done on the item at a lower level of maintenance, if authorized by the Maintenance Allocation Chart (MAC) and SMR codes.) This position will contain one of the following maintenance codes.

Code	*Application/Explanation*
O	-Unit or (aviation unit) is the lowest level that can do complete repair of the item.
F	-Direct support or aviation intermediate is the lowest level that can do complete repair of the item.
H	-General support is the lowest level that can do complete repair of the item.
L	-Specialized repair activity (none designated for power planta/power units) is the lowest level that can do complete repair of the item.
D	-Depot is the lowest level that can do complete repair of the item.
z	-Nonreparable. No repair is authorized,
B	-No repair is authorized. (No parts or special tools are authorized for the maintenance of a "B" coded item). However, the item may be reconditioned by adjusting, lubricating, etc., at the user level.

F-3.2.3 Recoverability Code. Recoverability codes are assigned to items to indicate the disposition action on unserviceable items. The recoverability code is entered in the fifth position of the SMR Code as follows:

Recoverability Codes	Application/Explanation
z	-Nonreparable item. When unserviceable, condemn and dispose of the item at the level of maintenance shown in 3d position of SMR Code.
o	-Reparable item. When uneconomically reparable, condemn and dispose of the item at unit or aviation unit level.
F	-Reparable item. When uneconomically reparable condemn and dispose of the item at the direct support or aviation intermediate level.
H	-Reparable item. When uneconomically reparable, condemn and dispose of the item at the general support level.
D	-Reparable item. When beyond lower level repair capability, return to depot. Condemnation and disposal of item not authorized below depot level.
L	-Reparable item. Condemnation and disposal not authorized below specialized repair activity (SRA).
A	-Item requires special handling or condemnation procedures because of specific reasons (e.g., precious metal content, high dollar value, critical material, or hazardous material). Refer to appropriate manuals/directives for specific instructions.

F-3.3 CAGEC (Column (3)). The Commercial and Government Entity Code (CAGEC) is used to identifiy the manufacturer, distributor, or Government agency, etc., that supplies the item.

F-3.4 PART NUMBER (Column (4)). Indicates the primary number used by the manufacturer (individual, company, firm, corporation, or Government activity), which controls the design and characteristics of the item by means of its engineering drawings, specifications, standards, and inspection requirements to identify an item or range of items.

NOTE: When you use a NSN to requisition an item, the item you receive may have a different part number from the part ordered.

F-3.5 DESCRIPTION AND USABLE ON CODE (UOC) (Column (5)1. This column includes the following information:

a. The Federal item name and, when required, a minimum description to identify the item.

b. Items that are included in kits and sets are listed below the name of the kit or set.

c. Spare/repair parts that make up an assembled item are listed immediately following the assembled item line entry.

d. Part numbers for bulk materials are referenced in this column in the line entry for the item to be manufactured/fabricated.

e. When the item is not used with all serial numbers of the same model, the effective serial numbers are shown on the last line(s) of the description (before UOC).

f. The usable on code, when applicable.

g. The statement "END OF FIGURE" appears just below the last item description in Column 5 for a given figure in both Section II and Section III.

F-3.6 QTY (Column (6)). The QTY (quantity per figure column) indicates the quantity of the item used in the breakout shown on the illustration figure, which is prepared for a functional group, subfunctional group, or an assembly. A "V" appearing in this column in lieu of a quantity indicates that the quantity is variable and the quantity may vary horn application to application.

F-4 EXPLANATION OF COLUMNS (SECTION IV).

F-4.1 National Stock Number (NSN) Index.

F-4.1.1 STOCK NUMBER column. This column lists the NSN by National item identification number (NIIN) sequence. The NIIN consists of the last nine digits of the NSN (i.e., 5305-01-674-1467). When using this column to locate an item, ignore the first 4 digits of the NSN. However, the complete NSN should be used when ordering items by stock number.

F-4.1.2 FIG. column. This column lists the number of the figure where the item is identified/located. The figures are in numerical order in Section II and Section III.

F-4.1.3 ITEM column. The item number identifies the item associated with the figure listed in the adjacent FIG. column. This item is also identified by the NSN listed on the same line.

F-4.2 **Part Number Index**. Part numbers in this index are listed by part number in ascending alphanumeric sequence (i.e., vertical arrangement of letter and number combination which places the first letter or digit of each group in order A through Z, followed by the numbers 0 through 9 and each following letter or digit in like order).

F-4.2.1 **CAGEC column**. The Commercial and Government Entity Code (CAGEC) is used to identify the manufacturer, distributor, or Government agency, etc., that supplies the item.

F-4.2.2 **PART NUMBER column**. Indicates the primary number used by the manufacturer (individual, firm, corporation, or Government activity), which controls the design and characteristics of the item by means of its engineering drawings, specifications, standards, and inspection requirements to identify an item or range of items.

F-4.2.3 **STOCK NUMBER column**. This column lists the NSN for the associated part number and manufacturer identified in the PART NUMBER and CAGEC columns to the left.

F-4.2.4 **FIG. column**. This column lists the number of the figure where the item is identified/located in Section II and III.

F-4.2.5 **ITEM column**. The item number is that number assigned to the item as it appears in the figure referenced in the adjacent figure number column.

F-4.3 Figure and Item Number Index.

F-4.3.1 **FIG. Column**. The column lists the number of the figure where the item is identified/located in Section II and III.

F-4.3.2 **ITEM Column**. The item number is that number assigned to the item as it appears in the figure referenced in the adjacent figure number column.

F-4.3.3 **STOCK NUMBER Column**. This column lists the NSN for the item.

F-4.3.4 **CAGEC Column**. The Commercial and Government Entity Code (CAGEC) is used to identify the manufacturer, distributor, or Government agency, etc., that supplies the item.

F-4.3.5 **PART NUMBER Column**. Indicates the primary number used by the manufacturer (individual, firm, corporation, or Government activity), which controls the design and characteristics of the item by means of its engineering drawings, specifications, standards, and inspection requirements to identify an item or range of items.

F-5 SPECIAL INFORMATION.

F-5.1 **Usable on Code**. The usable on code appears in the lower left corner of the Description Column heading. Usable on codes are shown as "UOC ..." in the Description Column (justified left) on the first line below the last line of the applicable item description/nomenclature. Uncoded items are applicable to all models. Identification of the usable on codes used in this manual are:

CODE	USED ON	CODE	USED ON
EVQ	AN/MJQ-35	EVR	PU-797
FMF	AN/MJQ-35A	FMK	PU-797A
ESP	AN/MJQ-36		

F-5.2 Fabrication Instructions. Bulk materials required to manufacture items are listed in the Bulk Material Functional Group of this RPSTL. Part numbers for bulk materials are also referenced in the description column of the line item entrv for the item to be manufactured/fabricated. Detailed fabrication instru~tions for the items source coded t0 be manufactured or fabricated are found in Appendix G.

F-5.3 Index Numbers. Items which have the word BULK in the figure column will have an index number shown in the item number column. This index number is used as a cross-reference between the National Stock Number/Part Number Index and the bulk material list in Section II.

F-6 HOW to LOCATE REPAIR PARTS.

F-6.1 When National Stock Number or Part Number is Not Known.

F-6.1.1 First. Using the table of contents, determine the assembly group to which the item belongs. This is necessary since figures are prepared for assembly groups and subassembly groups, and listings are divided into the same groups.

F-6.1.3 Second. Find the figure covering the assembly group or subassembly group to which the item belongs.

F-6.1.3 Third. Identify the item on the figure and use the Figure and Item Number Index to find the NSN.

F-6.2 When National Stock Number or Part Number is Known.

F-6.2.1 First. Using the National Stock Number or the Part Number Index, find the pertinent National Stock Number or Part Number. The NSN index is in National Item Identification Number (NIIN) sequence (see F-4. 1.1). The part numbers in the Part Number index are listed in ascending alphanumeric sequence (see F-4.2). Both indexes cross-reference you to the illustration/figure and item number of the item you are looking for.

F-6.2.2 Second. Turn to the figure and item number, verify that the item is the one you're looking for, then locate the item number in the repair parts list for the figure.

F-7 ABBREVIATIONS.

The glossary at the back of this manual contains a list of abbreviations that are used in this manual and not listed in MIL-STD-12D.

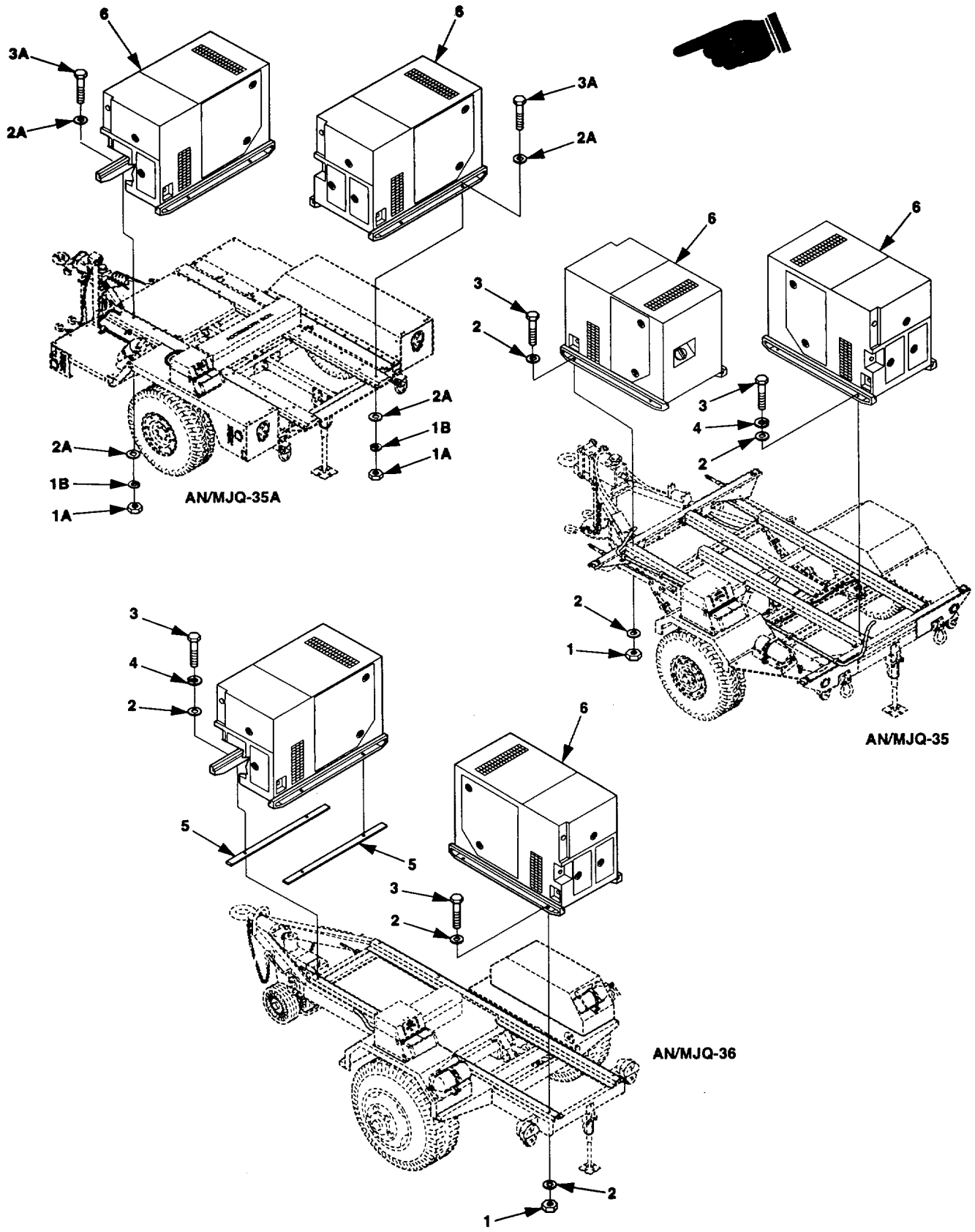

Figure F- 1. Generator Set, Installation.

SECTION II

(1) ITEM NO	(2) SMR CODE	(3) CAGEC	(4) PART NUMBER	(5) DESCRIPTION AND USABLE ON CODES (UOC)	(6) QTY
				GROUP 01 GENERATOR SET	
				FIG. 1 GENERATOR SET INSTALLATION	
1	PAFZZ	96906	MS51922-33	NUT,SELF-LOCKING ..... UOC:ESP,EVQ	6
1A	PAFZZ	96906	MS51971-5	NUT,PLAIN,HEXAGON ..... UOC:FMF	4
1B	PAFZZ	96906	MS35338-143	WASHER,LOCK..... UOC:FMF	4
2	PAFZZ	96906	MS51412-9	WASHER,FLAT..... UOC:ESP,EVQ	14
2A	PAFZZ	96906	MS 15795-817	WASHER,FLAT..... UOC:FMF	8
3	PAFZZ	80294	B1821BH050C175N	SCREW,CAP,HEXAGON ..... UOC:ESP,EVQ	8
3A	PAFZZ	96906	MS35307-414	SCREW,CAP,HEXAGON ..... UOC:FMF	4
4	PAFZZ	96906	MS51415-9	WASHER,LOCK..... UOC:ESP,EVQ	2
5	XDFZZ	97403	13229E9635	PLATE,SUPPORT ..... UOC:ESP	2
6	PDFHH	30554	MEP 802A	GENERATOR SET,DIESEL..... UOC:ESP,EVQ,FMF	2

END OF FIGURE

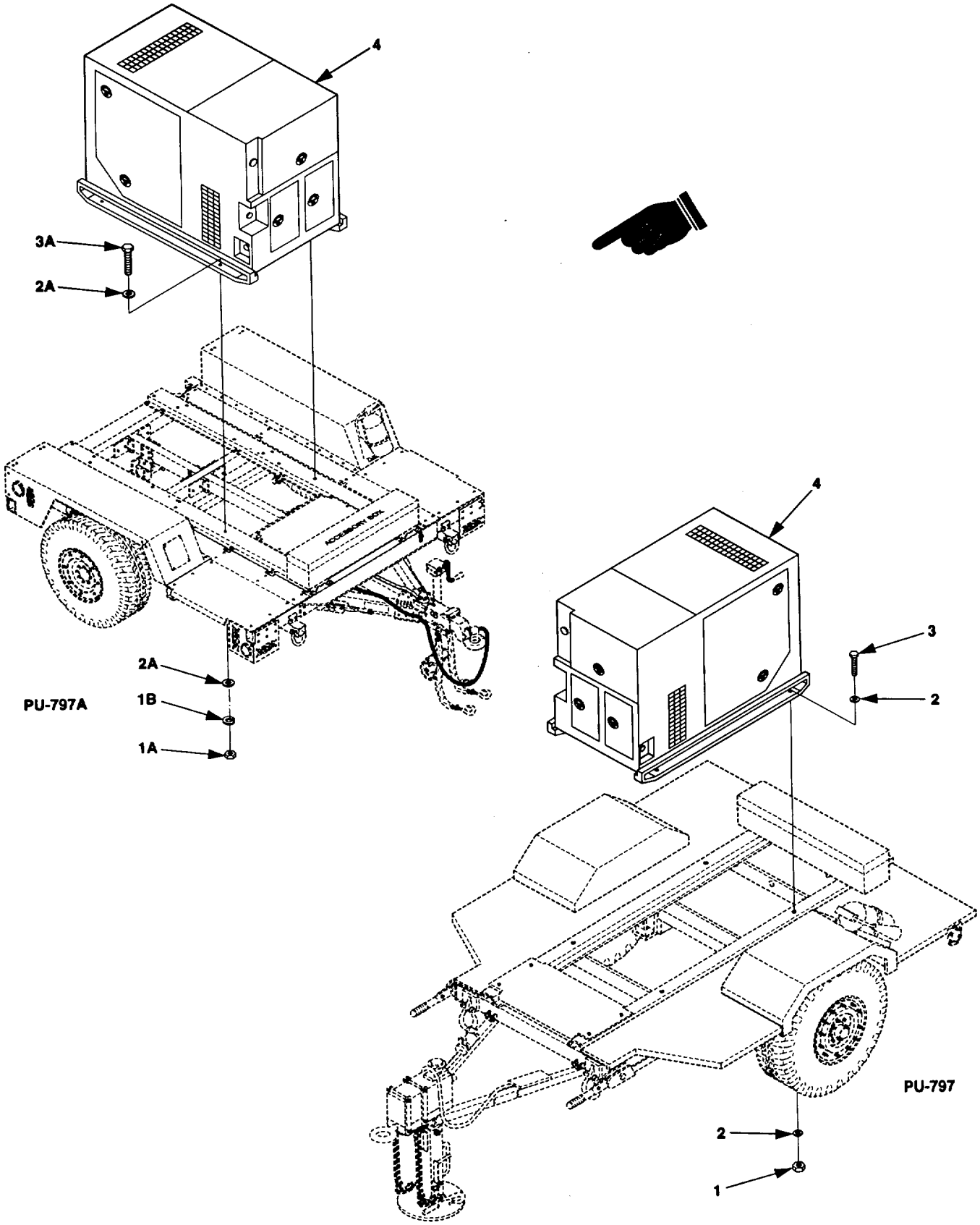

Figure F-2. Generator Set, Power Unit.

SECTION II

(1) ITEM NO	(2) SMR CODE	(3) CAGEC	(4) PART NUMBER	(5) DESCRIPTION AND USABLE ON CODES (UOC)	(6) QTY
				GROUP 01 GENERATOR SET	
				FIG. 2 GENERATOR SET, POWER UNIT	
1	PAFZZ	96906	MS51922-33	NUT,SELF-LOCKING,HE ..... UOC:EVR	4
1A	PAFZZ	96906	MS51971-5	NUT,PLAIN,HEX HEAD ..... UOC:FMK	4
1B	PAFZZ	96906	MS35338-143	WASHER,LOCK..... UOC:FMK	4
2	PAFZZ	96906	MS51412-9	WASHER,FLAT..... UOC:EVR	8
2A	PAFZZ	96906	MS15795-817	WASHER,FLAT..... UOC:FMK	8
3	PAFZZ	80204	B1821BH050C138N	SCREW,CAP,HEXAGON H..... UOC:EVR	4
3	PAFZZ	96906	MS35307-414	SCREW,CAP,HEXHEAD ..... UOC:FMK	4
4	PDFHH	30554	MEP 802A	GENERATOR SET, DIESE..... UOC:EVR,FMK	1

END OF FIGURE

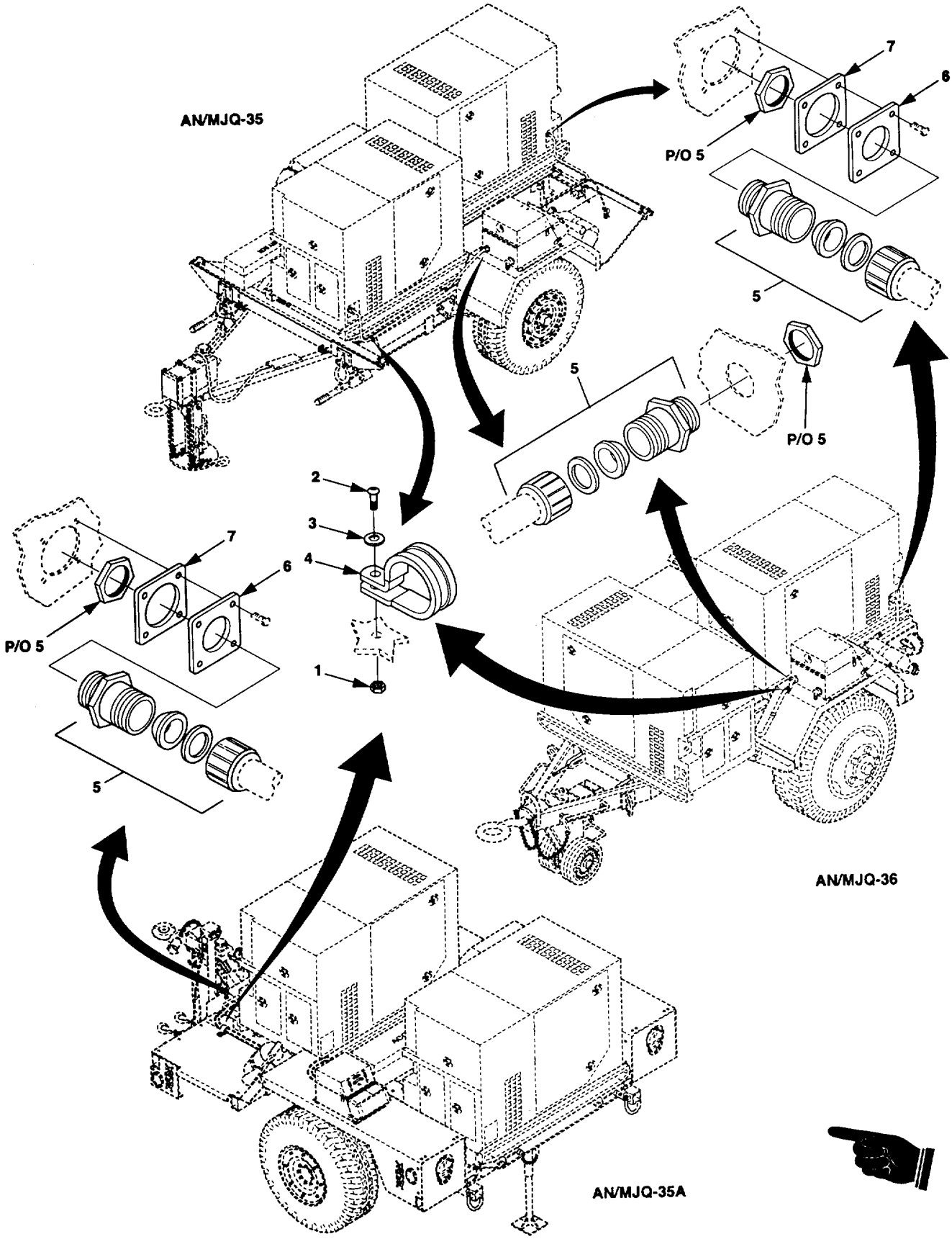

Figure F-3. Power Cables.

SECTION II

(1) ITEM NO	(2) SMR CODE	(3) CAGEC	(4) PART NUMBER	(5) DESCRIPTION AND USABLE ON CODES (UOC)	(6) QTY
				GROUP 02 ELECTRICAL SYSTEM	
				FIG. 3. POWER CABLES	
1	PAOZZ	96906	MS35650-302	.NUT,PLAIN,HEXAGON ..... UOC:ESP,EVQ	4
1	PAOZZ	96906	MS35650-302	.NUT,PLAIN,HEXAGON ..... UOC:FMF	2
2	PAOZZ	96906	MS35207-267	.SCREW,MACHINE ..... UOC:ESP,EVQ	4
2	PAOZZ	96906	MS35207-267	.SCREW,MACHINE ..... UOC:FMF	2
3	PAOZZ	96906	MS51412-2	.WASHER,FLAT..... UOC:ESP,EVQ	4
3	PAOZZ	96906	MS51412-2	.WASHER,FLAT..... UOC:FMF	2
4	PAOZZ	96906	MS21919WCG21	.CLAMP,LOOP..... UOC:ESP,EVQ	4
4	PAOZZ	96906	MS21919WCG21	.CLAMP,LOOP..... UOC:FMF	2
5	PAOZZ	97403	13218E5149-8	.TUBE,STUFFING..... UOC:ESP,EVQ,FMF	4
6	XDOZZ	97403	13229E5827	.PLATE,GEN OUTPUT ..... UOC:ESP,EVQ,FMF	2
7	PAOZZ	97403	M3BE510	.GASKET,RUBBER..... UOC:ESP,EVQ,FMF	2

END OF FIGURE

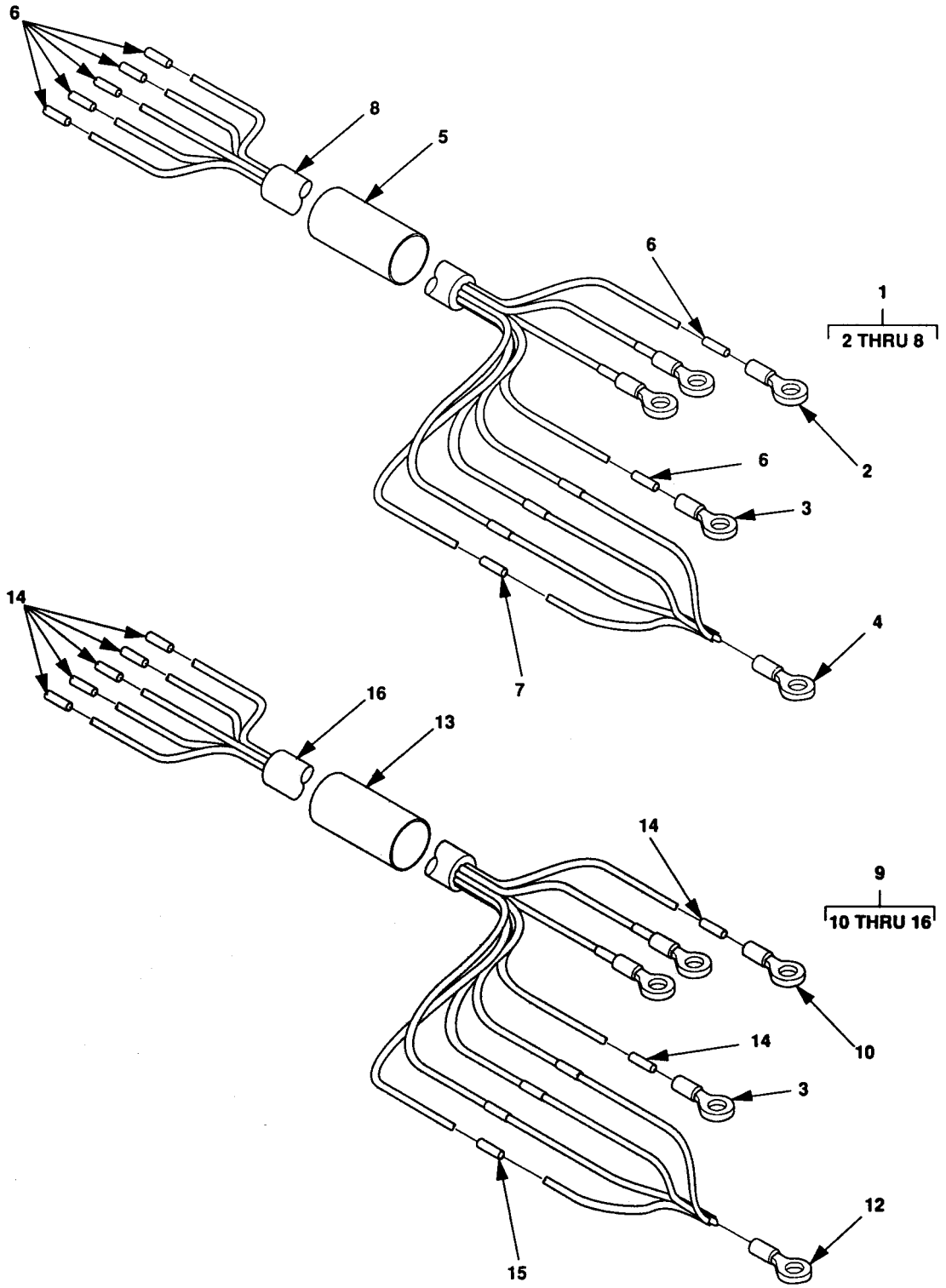

Figure F-4. Cable Assembly

SECTION II

(1) ITEM NO	(2) SMR CODE	(3) CAGEC	(4) PART NUMBER	(5) DESCRIPTION AND USABLE ON CODES (UOC)	(6) QTY
				GROUP 02 ELECTRICAL SYSTEM	
				FIG. 4 CABLE ASSEMBLY	
1	AFOFF	97403	13229E5836-1	CABLE ASSEMBLY FRONT CABLE..... UOC:EVQ	1
1A	AFOFF	97403	13229E5836-3	CABLE ASSEMBLY FRONT CABLE..... UOC:ESP	1
1B	AFOFF	97403	13229E5836-5	CABLE ASSEMBLY FRONT CABLE..... UOC:FMF	1
2	PAFZZ	96906	MS25036-125	TERMINAL,LUG..... UOC:ESP,EVQ,FMF	3
3	PAFZZ	96906	MS20659-145	TERMINAL, LUG..... UOC:ESP,EVQ,FMF	1
4	PAFZZ	96906	MS20659-143	TERMINAL, LUG..... UOC:ESP,EVQ,FMF	1
5	MFFZZ	81349	M23053/5-111-0	INSULATION SLEEVING,3IN.REQUIRED..... UOC:ESP,EVQ,FMF	1
6	MFFZZ	81349	M23053/5-107-9	INSULATION SLEEVING,MAKE AS REQUIRED..... UOC:ESP,EVQ,FMF	9
7	MFFZZ	81349	M23053/5-105-9	INSULATION SLEEVING,MAKE AS REQUIRED..... UOC:ESP,EVQ,FMF	4
8	MFFZZ	81349	CO-04HDF(4/4-4/11 R)1290	CABLE,POWER,64.0 IN.REQUIRED ..... UOC:FMF	1
8	MFFZZ	81349	CO-04HDF(4/4-4/11 R)1290	CABLE,POWER,126.5 IN.REQUIRED ..... UOC:EVQ	1
8	MFFZZ	81349	CO-04HDF(4/4-4/11R)1290	CABLE,POWER,83.5 IN.REQUIRED ..... UOC:ESP	1
9	AFOFF	97403	13229E5836-2	CABLE ASSEMBLY REAR CABLE..... UOC:EVQ	1
9A	AFOFF	97403	13229E5836-4	CABLE ASSEMBLY REAR CABLE..... UOC:ESP	1
9B	AFOFF	97403	13229E5836-6	CABLE ASSEMBLY REAR CABLE..... UOC:FMF	1
10	PAFZZ	96906	MS25036-125	TERMINAL,LUG..... UOC:ESP,EVQ,FMF	3
11	PAFZZ	96906	MS20659-145	TERMINAL,LUG..... UOC:ESP,EVQ,FMF	1
12	PAFZZ	96906	MS20659-143	TERMINAL,LUG..... UOC:ESP,EVQ,FMF	1
13	MFFZZ	81349	M23053/5-111-0	INSULATION SLEEVING,3 IN REQUIRED..... UOC:ESP,EVQ,FMF	1

SECTION II

(1) ITEM NO	(2) SMR CODE	(3) CAGEC	(4) PART NUMBER	(5) DESCRIPTION AND USABLE ON CODES (UOC)	(6) QTY
14	MFFZZ	81349	M23053/5-107-9	INSULATION SLEEVING,MAKE AS REQUIRED ..... UOC:ESP,EVQ,FMF	9
15	MFFZZ	81349	M23053/5-105-9	INSULATION SLEEVING,MAKE AS REQUIRED..... UOC:ESP,EVQ,FMF	4
16	MFFZZ	81349	CO-04HDF(4/4-4/11R)1290	CABLE,POWER,106.0 IN.REQUIRED ..... UOC:EVQ	1
16A	MFFZZ	81349	CO-04HDF(4/ -4/11R)1290	.. CABLE,POWER,111.0 IN.REQUIRED ..... UOC:ESP	1
16B	MFFZZ	81349	CO-04HDF(4/-4/11R)1290	.. CABLE,POWER,20.0 IN.REQUIRED ..... UOC:FMF	1

END OF FIGURE

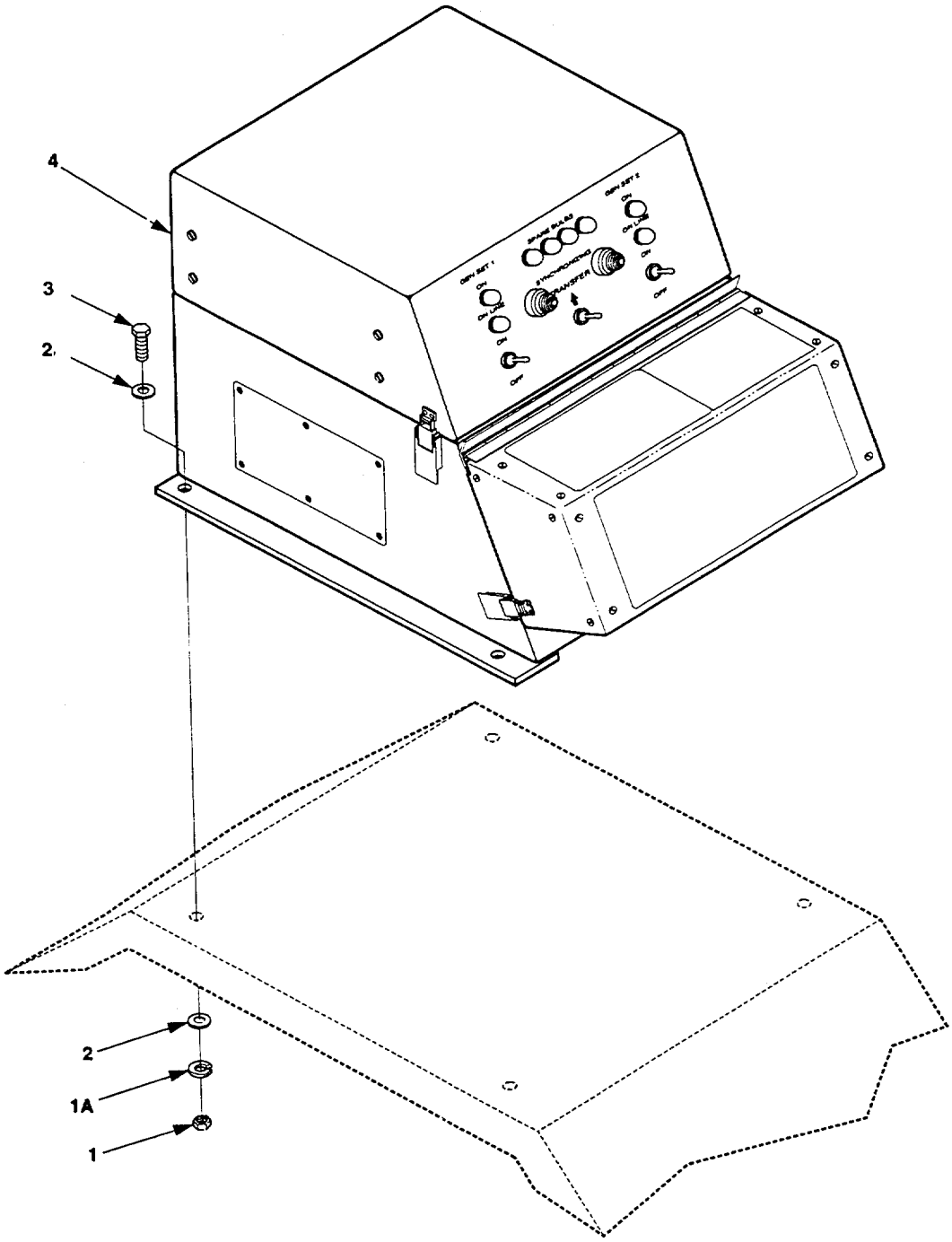

Figure F-5. Switch Box Installation.

SECTION II

(1) ITEM NO	(2) SMR CODE	(3) CAGEC	(4) PART NUMBER	(5) DESCRIPTION AND USABLE ON CODES (UOC)	(6) QTY
				GROUP 02 ELECTRICAL SYSTEM	
				FIG. 5 SWITCH BOX INSTALLATION	
1	PAOZZ	96906	MS51922-17	.NUT,SELF-LOCKING,HE ..... UOC:ESP,EVQ	4
1	PAOZZ	96906	MS35650-3314	.NUT,PLAIN,HEXAGON ..... UOC:FMF	4
1A	PAOZZ	96906	MS35338-140	.WASHER,LOCK..... UOC:FMF	4
2	PAOZZ	96906	MS51412-7	.WASHER,FLAT..... UOC:ESP,EVQ,	4
2	PAOZZ	96906	MS15795-812	.WASHER,FLAT..... UOC:FMF	8
3	PAOZZ	80204	B1821BH038C150N	.SCREW,CAP,HEXAGON H..... UOC:ESP,EVQ	4
3	PAOZZ	96906	MS35308-334	.SCREW,CAP,HEXAGON H..... UOC:FMF	4
4	XDFFF	97403	13229E5820-3	.SWITCHBOX ASSEMBLY ..... UOC:ESP,EVQ,FMF	1

END OF FIGURE

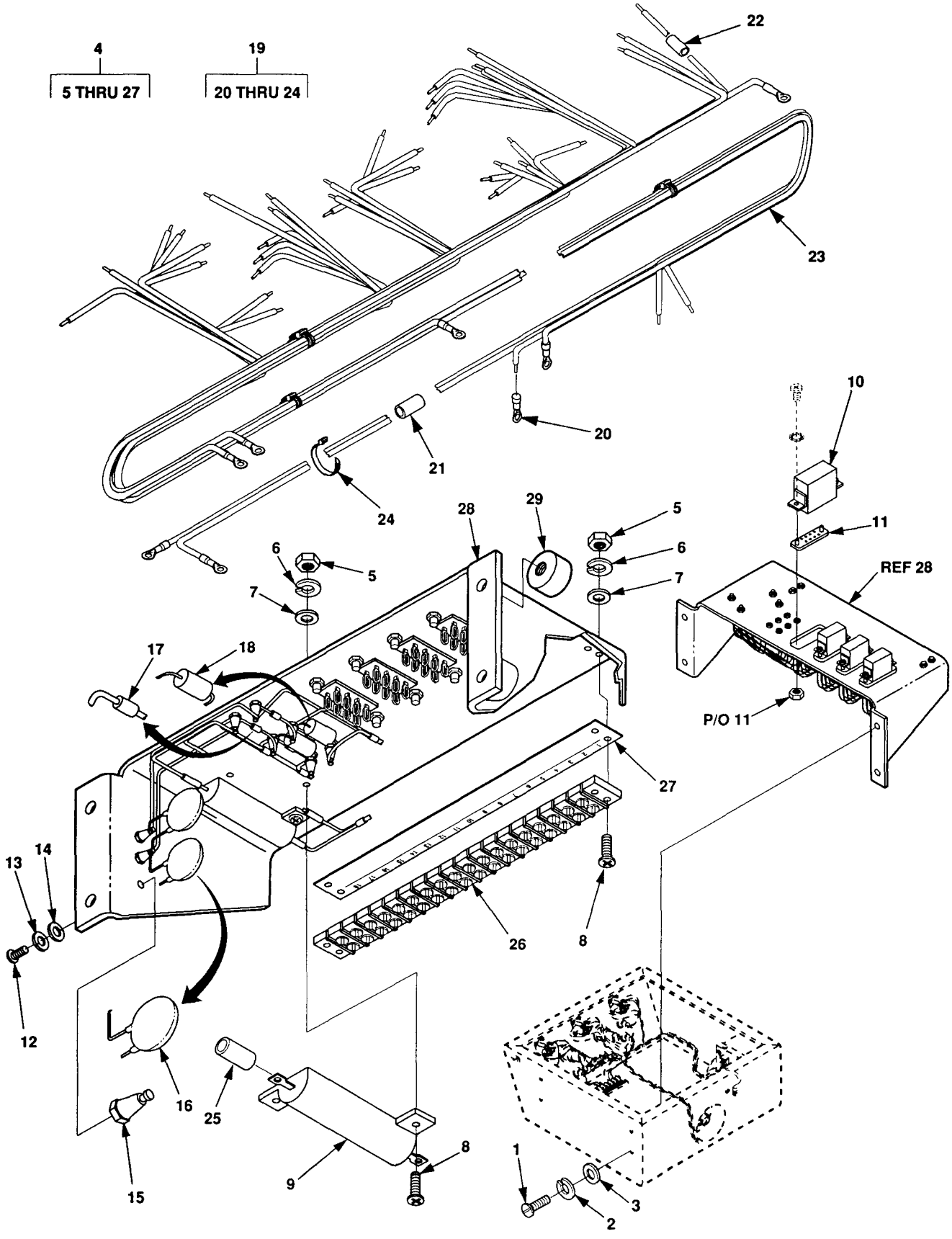

Figure F-6. Relay Board Harness Assembly (Sheet 1 of 2)

WIRE LIST					
WIRE NO.	TERMINATION		TERMINATION		WIRE ITEM NO.
	FROM	ITEM NO.	TO	TERMINAL ITEM NO.	
1	XK3-2		TB1-1	20	23
2	XK3-3		TB1-6	20	23
3	XK3-4		TB1-5	20	23
4	XK3-5		TB1-3	20	23
5	XK3-6		TB1-4	20	23
6	XK3-7		TB1-2	20	23
7	XK5-2		TB1-1	20	23
8	XK5-3		TB1-8	20	23
9	XK5-4		TB1-10	20	23
10	XK5-5		TB1-17	20	23
11	XK5-6		TB1-6	20	23
12	E-7		E-6	-	23
13	XK4-2		TB1-14	20	23
14	XK4-3		TB1-9	20	23
15	XK4-4		TB1-5	20	23
16	XK4-5		TB1-3	20	23
17	XK4-6		TB1-7	20	23
18	XK4-7		TB1-15	20	23
19	R1-1		TB1-17	20	23
20	XK6-3		TB1-12	20	23
21	XK6-4		TB1-11	20	23
22	XK6-5		TB1-16	20	23
23	XK6-6		TB1-13	20	23
24	XK6-7		TB1-15	20	23
25	R1-2		E6	-	23
26	R2-2		E3	-	23
27	E5		TB1-1	20	23
28	E4		TB1-1	20	23
29	R2-1		TB1-16	20	23
30	E3		TB1-15	20	23
31	E-1		E4	-	23
32	XK5-7		TB1-2	20	23
33	E-1		TB1-14	20	23
34	E8		TB1-8	20	23
35	XK6-2		TB1-14	20	23
36	E9		E3		23

F-6. Wire Parts List (Sheet 2 of 2)

SECTION II

(1) ITEM NO	(2) SMR CODE	(3) CAGEC	(4) PART NUMBER	(5) DESCRIPTION AND USABLE ON CODES (UOC)	(6) QTY
				GROUP 02 ELECTRICAL SYSTEM	
				FIG. 6 RELAY BOARD HARNESS ASSY	
1	PAFZZ	96906	MS51957-46	..SCREW,MACHINE UOC:ESP,EVQ,FMF	4
2	PAFZZ	96906	MS35338-137	..WASHER,LOCK UOC:ESP,EVQ,FMF	6
3	PAFZZ	96906	MS15795-841	..WASHER,FLAT UOC:ESP,EVQ,FMF	4
4	XDFFF	97403	13229E5830	..RELAY BOARD ASSEMBL UOC:ESP,EVQ,FMF	1
5	PAFZZ	96906	MS35649-244	..NUT,PLAIN,HEXAGON UOC:ESP,EVQ,FMF	6
6	PAFZZ	96906	MS35338-135	..WASHER,LOCK UOC:ESP,EVQ,FMF	6
7	PAFZZ	88044	AN960-C4	..WASHER,FLAT UOC:ESP,EVQ,FMF	6
8	PAFZ	96906	MS51957-18	..SCREW,MACHINE UOC:ESP,EVQ,FMF	6
9	PAFZZ	81349	RER75F2490P	..RESISTOR,FIXED WIRE UOC:ESP,EVQ,FMF	2
10	PAOZZ	81349	M5757/23-003	..RELAY,ELECTROMAGNET UOC:ESP,EVQ,FMF	4
11	PAFZZ	97403	13222E9686	..SOCKET,PLUG-IN ELEC UOC:ESP,EVQ,FMF	4
12	PAFZZ	96906	MS51957-27	..SCREW,MACHINE UOC:ESP,EVQ;FMF	9
13	PAFZZ	96906	MS35338-136	..WASHER,LOCK UOC:ESP,EVQ,FMF	9
14	PAFZZ	96906	MS51412-1	..WASHER,FLAT UOC:ESP,EVQ,FMF	9
15	PAFZZ	81349	M551551-99G03	..TERMINAL,STUD UOC:ESP,EVQ,FMF	9
16	PAFZZ	60705	565C10OGAP10	..CAPACITOR UOC:ESP,EVQ,FMF	2
17	PAFZZ	81349	JANTX1N5619	..SEMICONDUCTOR DEVIC UOC:ESP,EVQ,FMF	4
18	PAFZZ	81349	M39006/22-0631	..CAPACITOR,FIXED,ELE UOC:ESP,EVQ,FMF	2
19	XDFFF	97403	13229E5829	..HARNESS ASSEMBLY UOC:ESP,EVQ,FMF	1
20	PAOZZ	96906	MS25036-102	..TERMINAL,LUG UOC:ESP,EVQ,FMF	31
21	MFFZZ	81349	M23053/5-107-4	..INSULATION SLEEVING,1.5 IN.REQUIRED UOC:ESP,EVQ,FMF	1
22	MFFZZ	81349	M23053/5-105-4	..INSULATION SLEEVING,1.5 IN.REQUIRED UOC:ESP,EVQ,FMF	70

SECTION II

(1) ITEM NO	(2) SMR CODE	(3) CAGEC	(4) PART NUMBER	(5) DESCRIPTION AND USABLE ON CODES (UOC)	(6) QTY
23	MFFZZ	81349	M22759/16-20-9	...WIRE,ELECTRICAL,MAKE AS REQUIRED..... UOC:ESP,EVQ,FMF	1
24	PAFZZ	96906	MS3367-4-9	...STRAP,TIEDOWN,ELECT ..... UOC:ESP,EVQ,FMF	V
25	MFFZZ	81349	M23053/5-104-0	...INSULATION SLEEVING,MAKE AS REQUIRED..... UOC:ESP,EVQ,FMF	1
26	XDFZZ	81349	37TB18B	...TERMINAL BOARD ..... UOC:ESP,EVQ,FMF	1
27	PAFZZ	96906	MSA37TB18	..MARKER STRIP,TERMIN ..... UOC:ESP,EVQ,FMF	1
28	XDFFF	97403	13229E5823	...BRACKET ..... UOC:ESP,EVQ,FMF	1
29	PAFZZ	81349	M45938/1-13C	...NUT,PLAIN,CLINCH ..... UOC:ESP,EVQ,FMF	4

END OF FIGURE

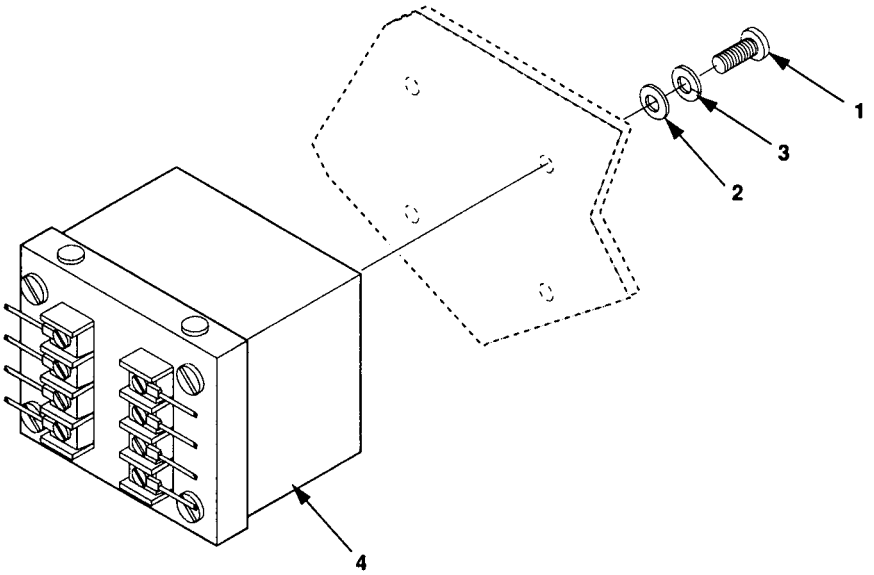

Figure F-7. Permissive Paralleling Relay

SECTION II

(1) ITEM NO	(2) SMR CODE	(3) CAGEC	(4) PART NUMBER	(5) DESCRIPTION AND USABLE ON CODES (UOC)	(6) QTY
				GROUP 02 ELECTRICAL SYSTEM	
				FIG. 7 PERMISSIVE PARALLELING RELAY	
1	PAFZZ	96906	MS51957-46	..SCREW,MACHINE ..... UOC:ESP,EVQ,FMF	4
2	PAFZZ	96906	MS15795-841	..WASHER,FLAT..... UOC:ESP,EVQ,FMF	4
3	PAFZZ	96906	MS35338-137	..WASHER,LOCK..... UOC:ESP,EVQ,FMF	4
4	PAFZZ	60177	11500	..RELAY,PERMISSIVE PR..... UOC:ESP,EVQ,FMF	1

END OF FIGURE

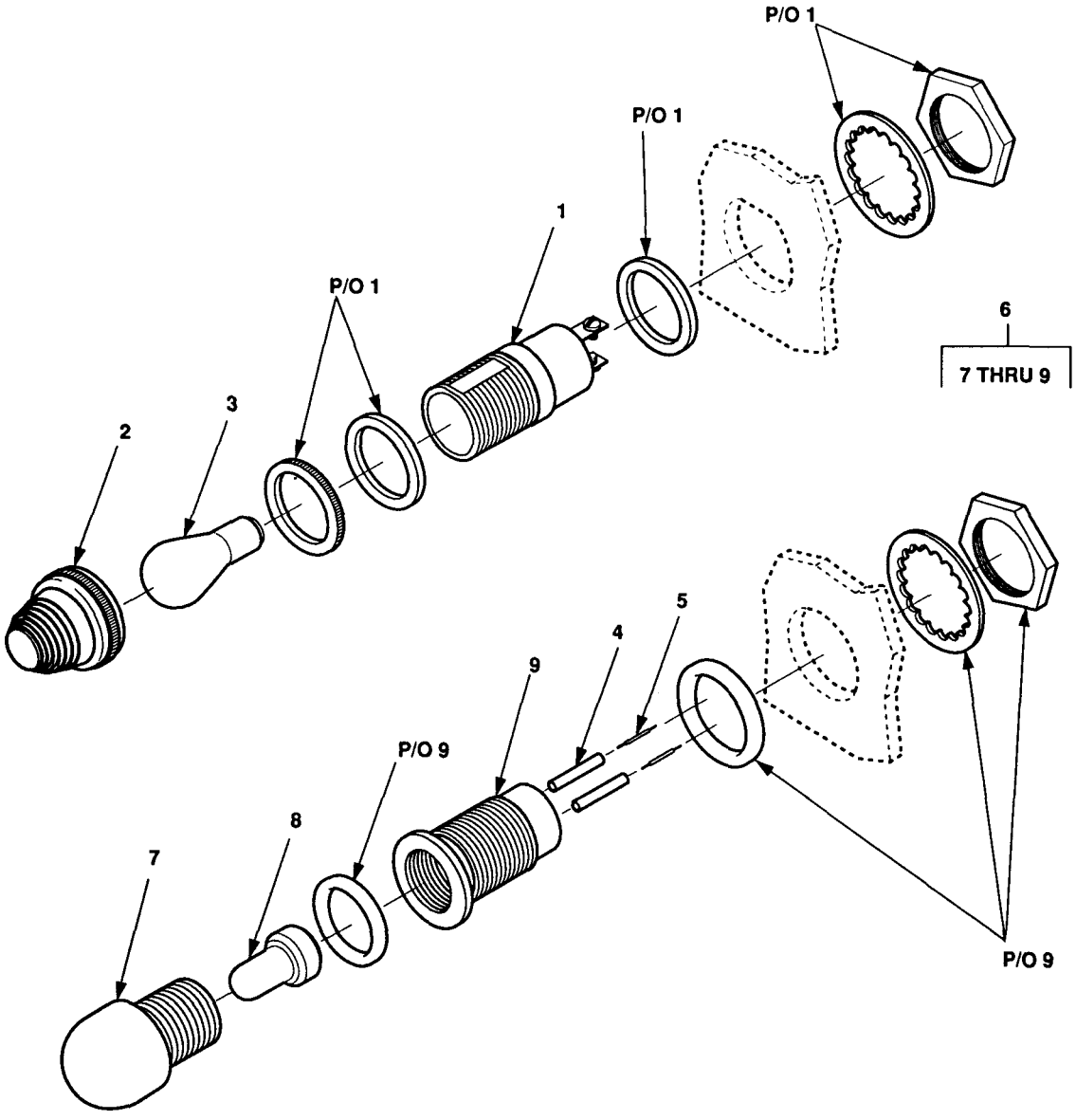

Figure F-8. Indicator Lights

SECTION II

(1) ITEM NO	(2) SMR CODE	(3) CAGEC	(4) PART NUMBER	(5) DESCRIPTION AND USABLE ON CODES (UOC)	(6) QTY
				GROUP 02 ELECTRICAL SYSTEM	
				FIG. 8 INDICATOR LIGHTS	
1	PAOZZ	81349	LH80/1	..LIGHT,INDICATOR..... UOC:ESP,EVQ,FMF	3
2	PAOZZ	81349	LC21CD3	..LENS,LIGHT ..... UOC:ESP,EVQ,FMF	3
3	PAOZZ	81348	W-L-101/130	..LAMP,INCANDESCENT ..... UOC:ESP,EVQ,FMF	3
4	MOOZZ	81349	M23053/5-107-9	..INSULATION SLEEVING,MAKE AS REQUIRED ..... UOC:ESP,EVQ,FMF	1
5	MOOZZ	81349	M22759/16-20-9	..WIRE,ELECTRICAL,MAKE AS REQUIRED..... UOC:ESP,EVQ,FMF	1
6	PAOOZ	97403	13214E1391	..LIGHT,INDICATOR..... UOC:ESP,EVQ,FMF	4
7	PAOZZ	83330	181-0931-001	..LENS,CLEAR..... UOC:ESP,EVQ,FMF	1
8	PAOZZ	58224	G9B	..LAMP..... UOC:ESP,EVQ,FMF	1
9	PAOZZ	72619	181-8836-09-553	..LIGHT,INDICATOR..... UOC:ESP,EVQ,FMF	1

END OF FIGURE

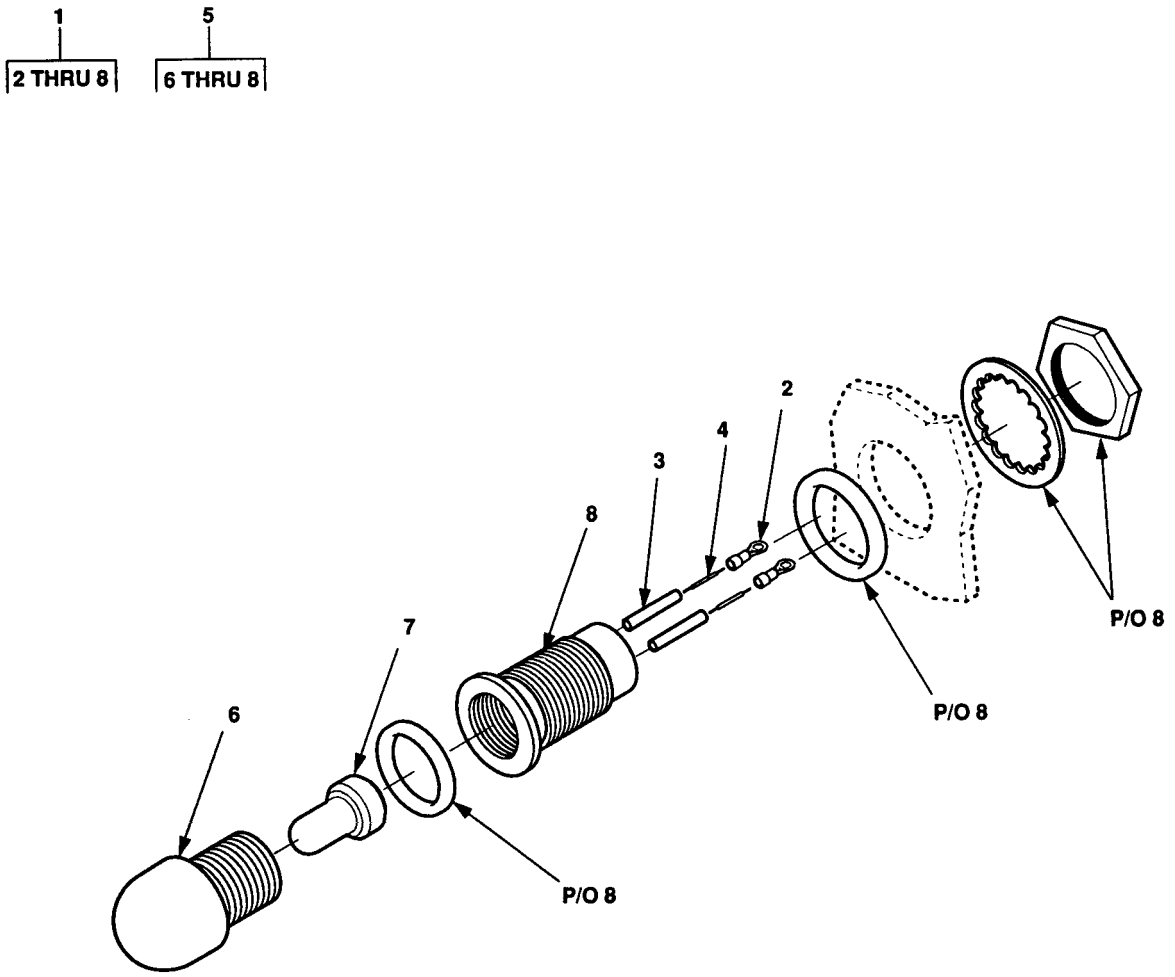

Figure F-9. Light Assembly

SECTION II

(1) ITEM NO	(2) SMR CODE	(3) CAGEC	(4) PART NUMBER	(5) DESCRIPTION AND USABLE ON CODES (UOC)	(6) QTY
				GROUP 02 ELECTRICAL SYSTEM	
				FIG. 9 LIGHT ASSEMBLY	
1	AOOOO	97403	13229E5764-2	..LIGHT AND WIRE UOC: ESP, EVQ, FMF	4
2	PAOZZ	96906	MS25036-101	...TERMINAL, LUG UOC: ESP, EVQ, FMF	2
3	MOOZZ	81349	M23053/5-104-9	...INSULATION SLEEVING, 1 INCH REQUIRED UOC: ESP, EVQ, FMF	2
4	MOOZZ	81349	M5086/2-18-9	...WIRE, ELECTRICAL, 8 INCHES REQUIRED UOC: ESP, EVQ, FMF	2
5	PAOOO	97403	13214E1391	...LIGHT, INDICATOR UOC: ESP, EVQ, FMF	1
6	PAOZZ	83330	181-0931-001	....LENS, CLEAR UOC: ESP, EVQ, FMF	1
7	PAOZZ	58224	G9B	....LAMP UOC: ESP, EVQ, FMF	1
8	PAOZZ	72619	181-8836-09-553	....LIGHT, INDICATOR UOC: ESP, EVQ, FMF	1

END OF FIGURE

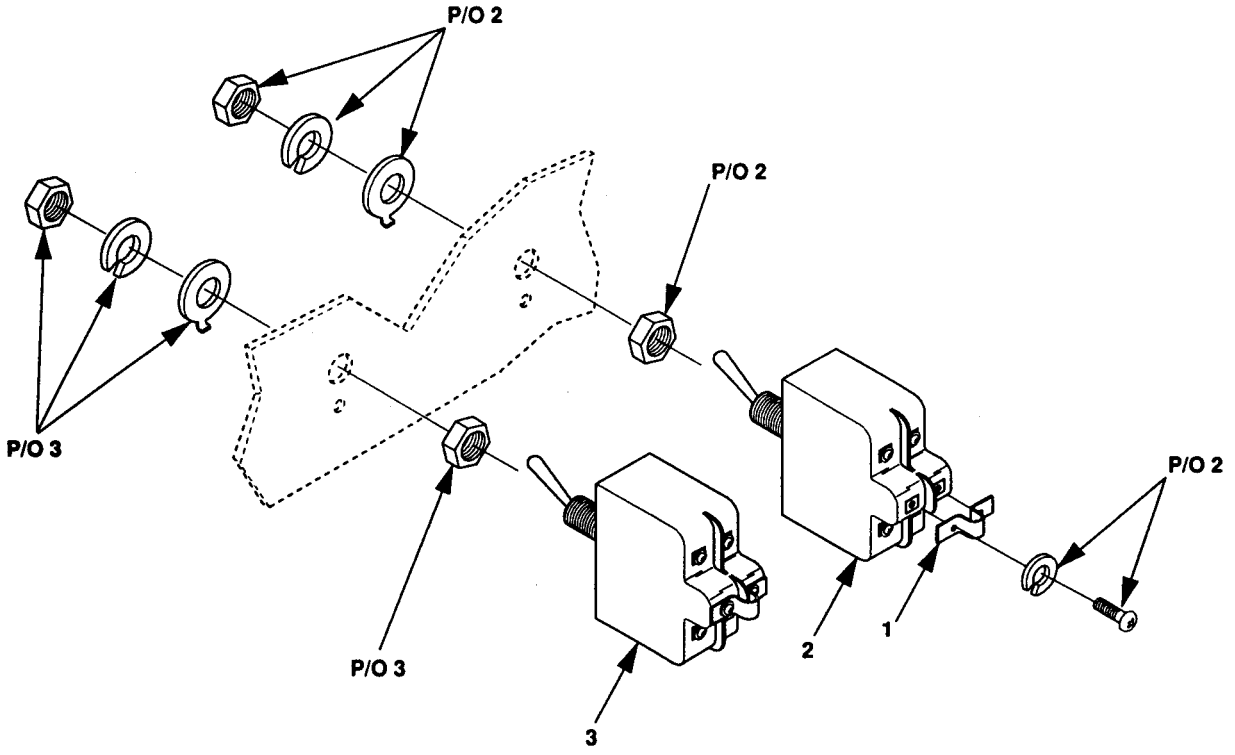

Figure F-10. Switches

SECTION II

(1) ITEM NO	(2) SMR CODE	(3) CAGEC	(4) PART NUMBER	(5) DESCRIPTION AND USABLE ON CODES (UOC)	(6) QTY
				GROUP 02 ELECTRICAL SYSTEM	
				FIG.10 SWITCHES	
1	PAOZZ	81349	TBJA	..BUS, CONDUCTOR UOC: ESP, EVQ, FMF	2
2	PAOZZ	96906	MS27407-3	..SWITCH, TOGGLE ON LINE SWITCH UOC: ESP, EVQ, FMF	2
3	PAOZZ	96906	MS24524-30	..SWITCH, TOGGLE TRANSFER SWITCH UOC: ESP, EVQ, FMF	1
				END OF FIGURE	

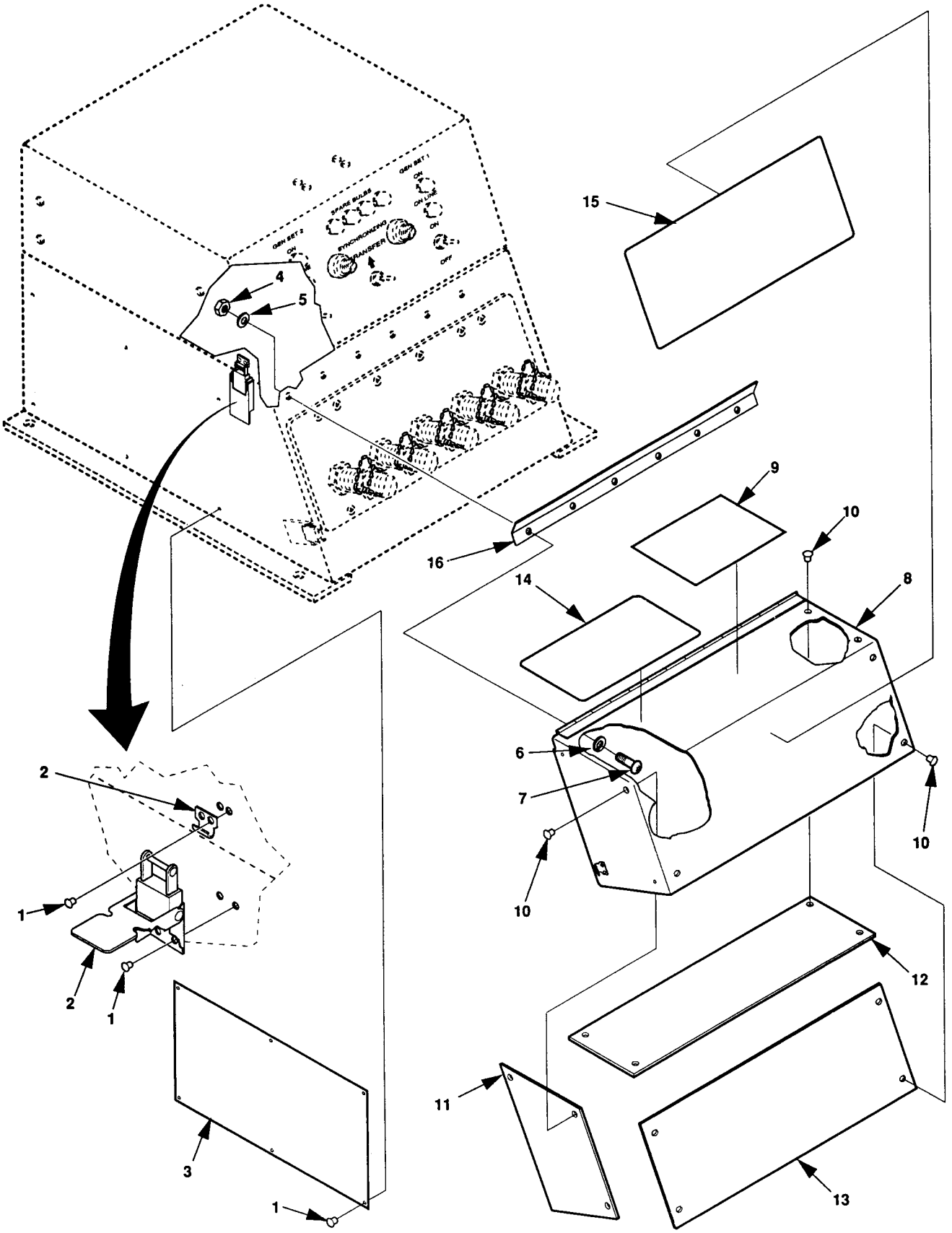

Figure F-11. Load Terminal Cover

SECTION II

(1) ITEM NO	(2) SMR CODE	(3) CAGEC	(4) PART NUMBER	(5) DESCRIPTION AND USABLE ON CODES (UOC)	(6) QTY
				GROUP 021 ELECTRICAL SYSTEM	
				FIG. 11 LOAD TERMINAL COVER	
1	PAOZZ	96906	MS20600AD4W3	..RIVET, BLIND UOC: ESP, EVQ, FMF	22
2	PAOZZ	96906	MS18015-1	..CATCH, CLAMPING UOC: ESP, EVQ, FMF	4
3	MDOZZ	97409	13229E5819-3	..PLATE, IDENTIFICATIO SCHEMATIC UOC: ESP, EVQ, FMF	1
4	PAOZZ	96906	MS35649-284	..NUT, PLAIN, HEXAGON UOC: ESP, EVQ, FMF	6
5	PAFZZ	96906	MS35338-137	..WASHER, LOCK UOC: ESP, EVQ, FMF	6
6	PAOZZ	96906	MS15795-841	..WASHER, FLAT UOC: ESP, EVQ, FMF	6
7	PAOZZ	96906	MS51957-46	..SCREW, MACHINE UOC: ESP, EVQ, FMF	6
8	XDOFF	97403	13229E5649-1	..COVER, LOAD TERMINAL UOC: ESP, EVQ, FMF	1
9	MDOZZ	97403	13229E5728-1	...MARKER, WARNING UOC: ESP, EVQ, FMF	1
10	PAOZZ	96906	MS20600AD3W3	...RIVET, BLIND UOC: ESP, EVQ, FMF	18
11	MFFZZ	81349	M24768/2-S-7	...SHEET, PLASTIC, 4.5X6.5 IN. REQUIRED UOC: ESP, EVQ, FMF	2
12	MFFZZ	81349	M24768/2-S-7	...SHEET, PLASTIC, 5X13.5 IN. REQUIRED UOC: ESP, EVQ, FMF	1
13	MFFZZ	81349	M24768/2-S-7	...SHEET, PLASTIC, 4.75 X 13.5 INCHES REQUIRED UOC: ESP, EVQ, FMF	1
14	MDOZZ	97403	13229E5654-1	...PLATE, IDENTIFICATIO POWER PLANT OPERATING PROCEDURES UOC: ESP, EVQ, FMF	1
15	MDOZZ	97403	13229E5654-2	...PLATE, IDENTIFICATIO LOAD TRANSFER PROCEDURES UOC: ESP, EVQ, FMF	1
16	XDOZZ	97403	13229E9630	...STOP, TERMINAL COVER UOC: ESP, EVQ, FMF	1

END OF FIGURE

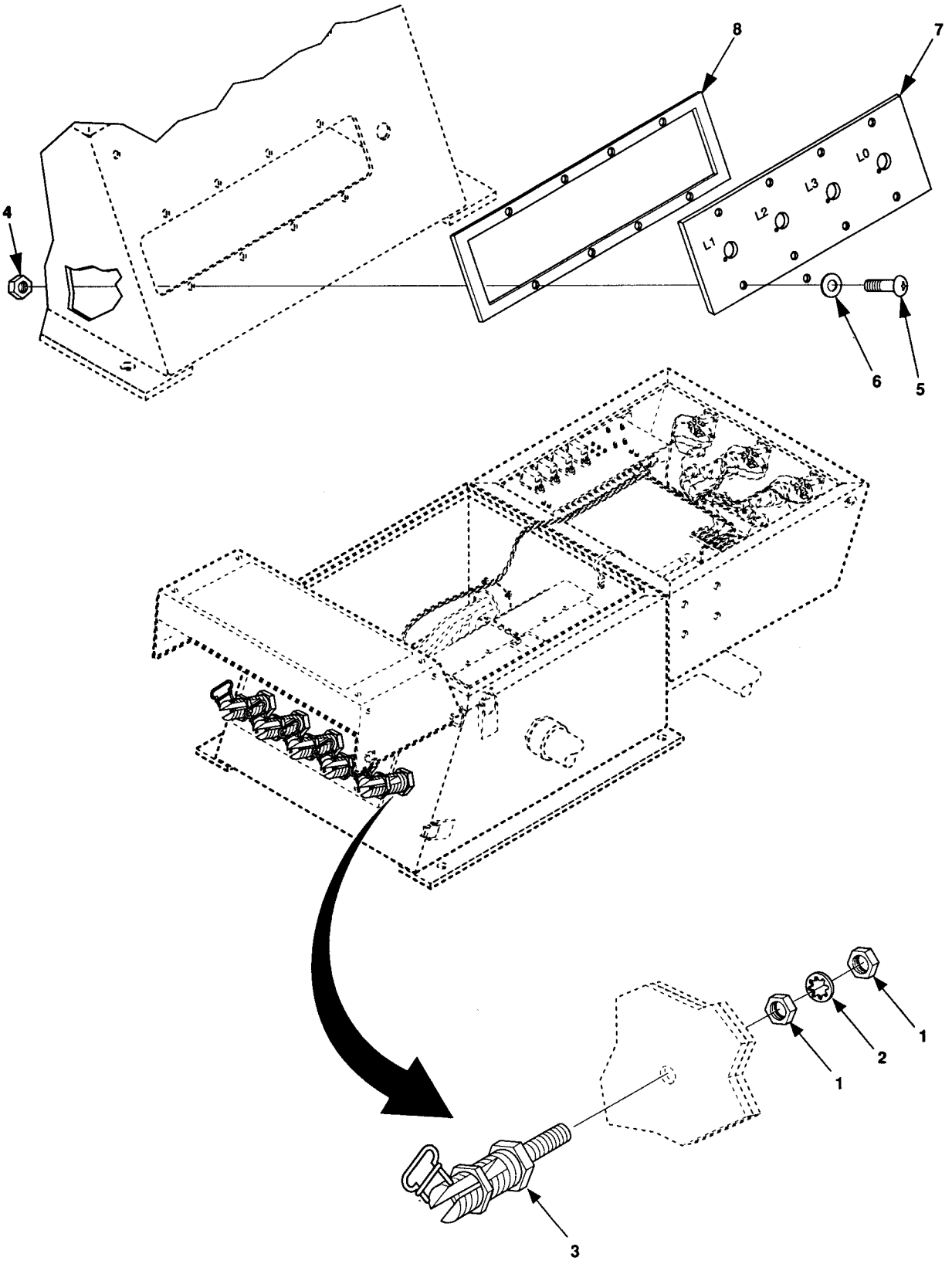

Figure F-12. *Load Terminal*

SECTION II

(1) ITEM NO	(2) SMR CODE	(3) CAGEC	(4) PART NUMBER	(5) DESCRIPTION AND USABLE ON CODES (UOC)	(6) QTY
				GROUP 02 ELECTRICAL SYSTEM	
				FIG. 12 LOAD TERMINAL	
1	PAOZZ	96906	MS35691-35	..NUT, PLAIN, HEXAGON UOC: ESP, EVQ, FMF	10
2	PAOZZ	96906	MS35333-113	..WASHER, LOCK UOC: ESP, EVQ, FMF	5
3	PAOOO	96906	MS39347-4	..TERMINAL, LOAD UOC: ESP, EVQ, FMF	5
4	PAOZZ	96906	MS51858-5	..NUT, PLAIN, HEXAGON UOC: ESP, EVQ, FMF	8
5	PAOZZ	96906	MS18212-65	..SCREW, MACHINE UOC: ESP, EVQ, FMF	8
6	PAOZZ	96906	MS51859-5	..WASHER, FLAT UOC: ESP, EVQ, FMF	8
7	XDOZZ	97403	13229E5833	..PANEL, LOAD TERMINAL UOC: ESP, EVQ, FMF	1
8	XDOZZ	97403	13229E9631	..GASKET, LOAD TERMINA UOC: ESP, EVQ, FMF	1

END OF FIGURE

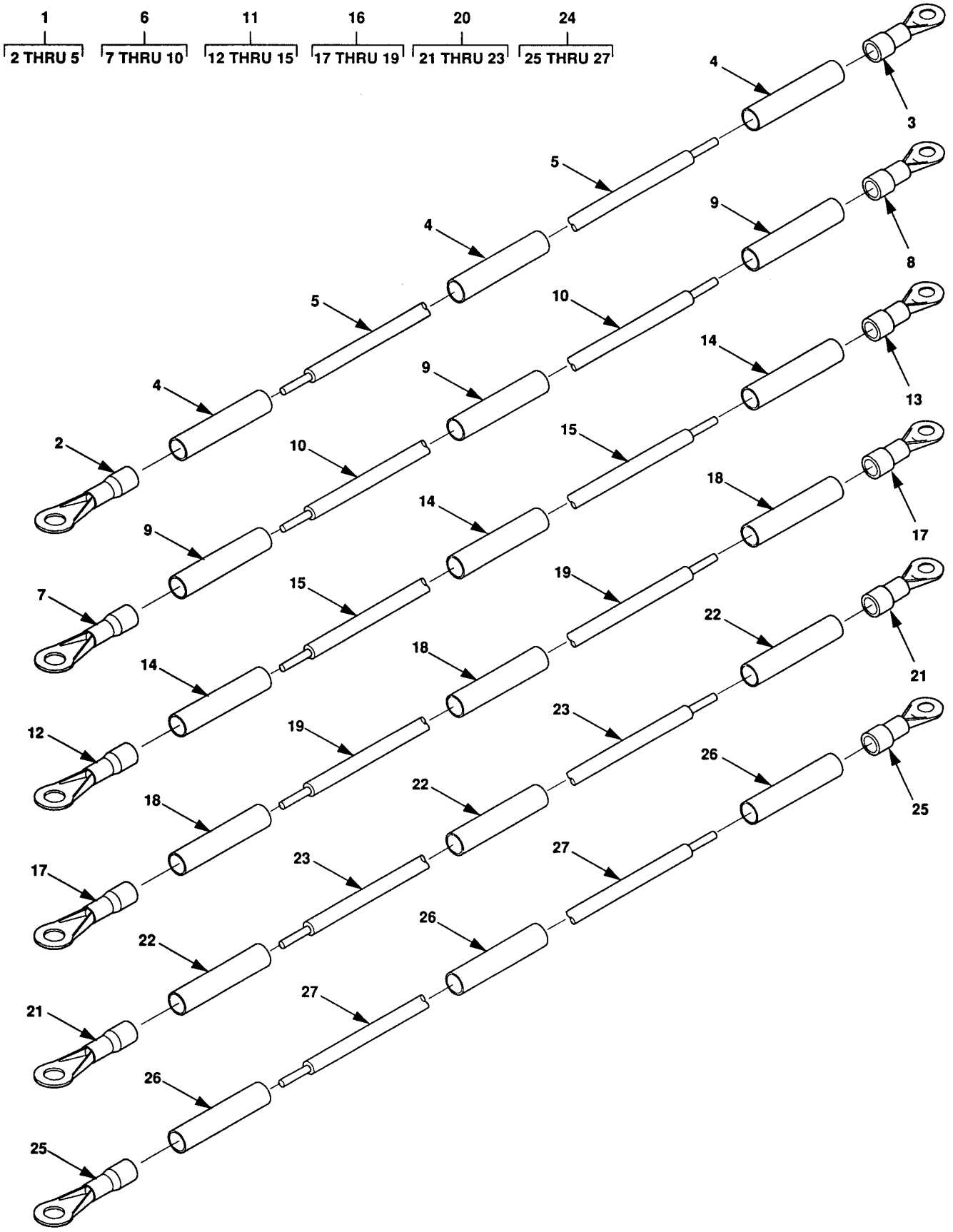

Figure F-13. Electrical Leads

SECTION II

(1) ITEM NO	(2) SMR CODE	(3) CAGEC	(4) PART NUMBER	(5) DESCRIPTION AND USABLE ON CODES (UOC)	(6) QTY
				GROUP 02 ELECTRICAL SYSTEM	
				FIG. 12 LOAD TERMINAL	
1	PAOZZ	96906	MS35691-35	..NUT, PLAIN, HEXAGON UOC: ESP, EVQ, FMF	10
2	PAOZZ	96906	MS35333-113	..WASHER, LOCK UOC: ESP, EVQ, FMF	5
3	PAOOO	96906	MS39347-4	..TERMINAL, LOAD UOC: ESP, EVQ, FMF	5
4	PAOZZ	96906	MS51858-5	..NUT, PLAIN, HEXAGON UOC: ESP, EVQ, FMF	8
5	PAOZZ	96906	MS18212-65	..SCREW, MACHINE UOC: ESP, EVQ, FMF	8
6	PAOZZ	96906	MS51859-5	..WASHER, FLAT UOC: ESP, EVQ, FMF	8
7	XDOZZ	97403	13229E5833	..PANEL, LOAD TERMINAL UOC: ESP, EVQ, FMF	1
8	XDOZZ	97403	13229E9631	..GASKET, LOAD TERMINA UOC: ESP, EVQ, FMF	1

END OF FIGURE

(1) ITEM NO	(2) SMR CODE	(3) CAGEC	(4) PART NUMBER	(5) DESCRIPTION AND USABLE ON CODES (UOC)	(6) QTY
				REQUIRED UOC:ESP,EVQ	
19	MFFZZ	19099	13229E5828-4-2	WIRE,ELECTRICAL MAKE FROM P/N M5086/2-4-9 (81349),12 INCHES REQUIRED UOC:ESP,EVQ	1
20	AFFFF	97403	13229E5828-5	LEAD,ELECTRICAL UOC:ESP,EVQ	1
21	PAFZZ	96906	MS20659-145	TERMINAL,LUG UOC:ESP,EVQ	2
22	MFFZZ	19099	13229E5828-5-4	INSULATION SLEEVING MAKE FROM P/N M23053/5-108-4 (81349), 2.5 IN. REQUIRED UOC:ESP,EVQ	3
23	MFFZZ	19099	13229E5828-5-2	WIRE,ELECTRICAL MAKE FROM P/N M5086/2-4-9 (81349),12 INCHES REQUIRED UOC:ESP,EVQ	1
24	AFFFF	97403	13229E5828-6	LEAD,ELECTRICAL UOC:ESP,EVQ	1
26	PAFZZ	96906	MS20659-145	TERMINAL,LUG UOC:ESP,EVQ	2
26	MFFZZ	19099	13229E5828-6-4	INSULATION SLEEVING MAKE FROM P/N M23053/5-108-4 (81349), 2.5 IN. REQUIRED UOC:ESP,EVQ	3
27	MFFZZ	19099	13229E5828-6-2	WIRE,ELECTRICAL MAKE FROM P/N M5086/2-4-9 (81349),12 INCHES REQUIRED UOC:ESP,EVQ	1

END OF FIGURE

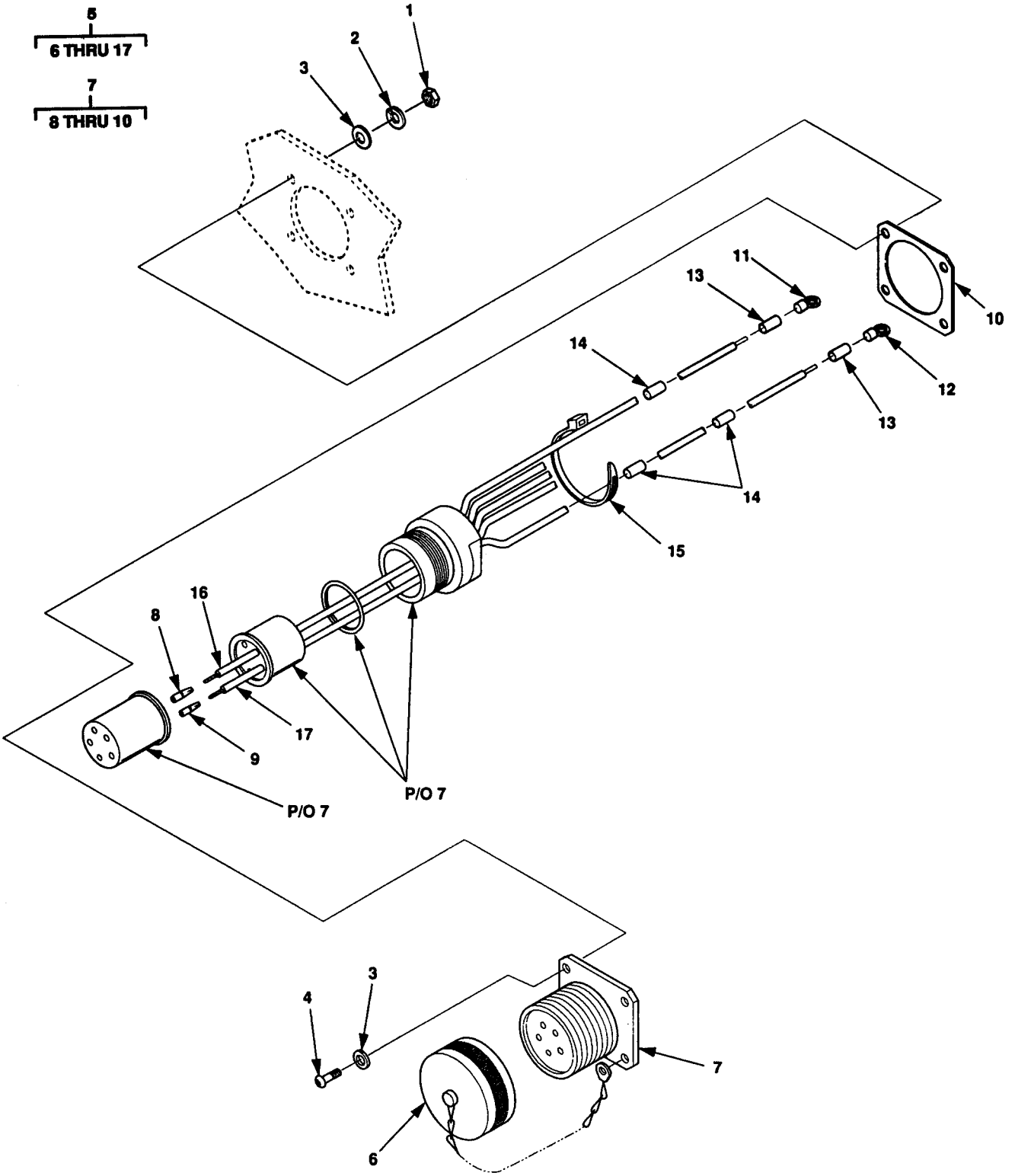

Figure F-14. Output Connector Harness Assembly

SECTION II

(1) ITEM NO	(2) SMR CODE	(3) CAGEC	(4) PART NUMBER	(5) DESCRIPTION AND USABLE ON CODES (UOC)	(6) QTY
20	AFFFF	97403	13229E5828-5	LEAD, ELECTRICAL UOC: ESP, EVQ, FMF	1
21	PAFZZ	96906	MS20659-145	TERMINAL, LUG UOC: ESP, EVQ, FMF	2
22	MFFZZ	81349	M23053/5-108-4	INSULATION SLEEVING, 2.5 IN. REQUIRED UOC: ESP, EVQ, FMF	3
23	MFFZZ	81349	M5086/2-4-9	WIRE, ELECTRICAL, 12 INCHES REQUIRED UOC: ESP, EVQ, FMF	1
24	AFFFF	97403	13229E5828-6	LEAD, ELECTRICAL UOC: ESP, EVQ, FMF	1
25	PAFZZ	96906	MS20659-145	TERMINAL, LUG UOC: ESP, EVQ, FMF	2
26	MFFZZ	81349	M23053/5-108-4	INSULATION SLEEVING, 2.5 IN. REQUIRED UOC: ESP, EVQ, FMF	3
27	MFFZZ	81349	M5086/2-4-9	WIRE, ELECTRICAL, 12 INCHES REQUIRED UOC: ESP, EVQ, FMF	1

END OF FIGURE

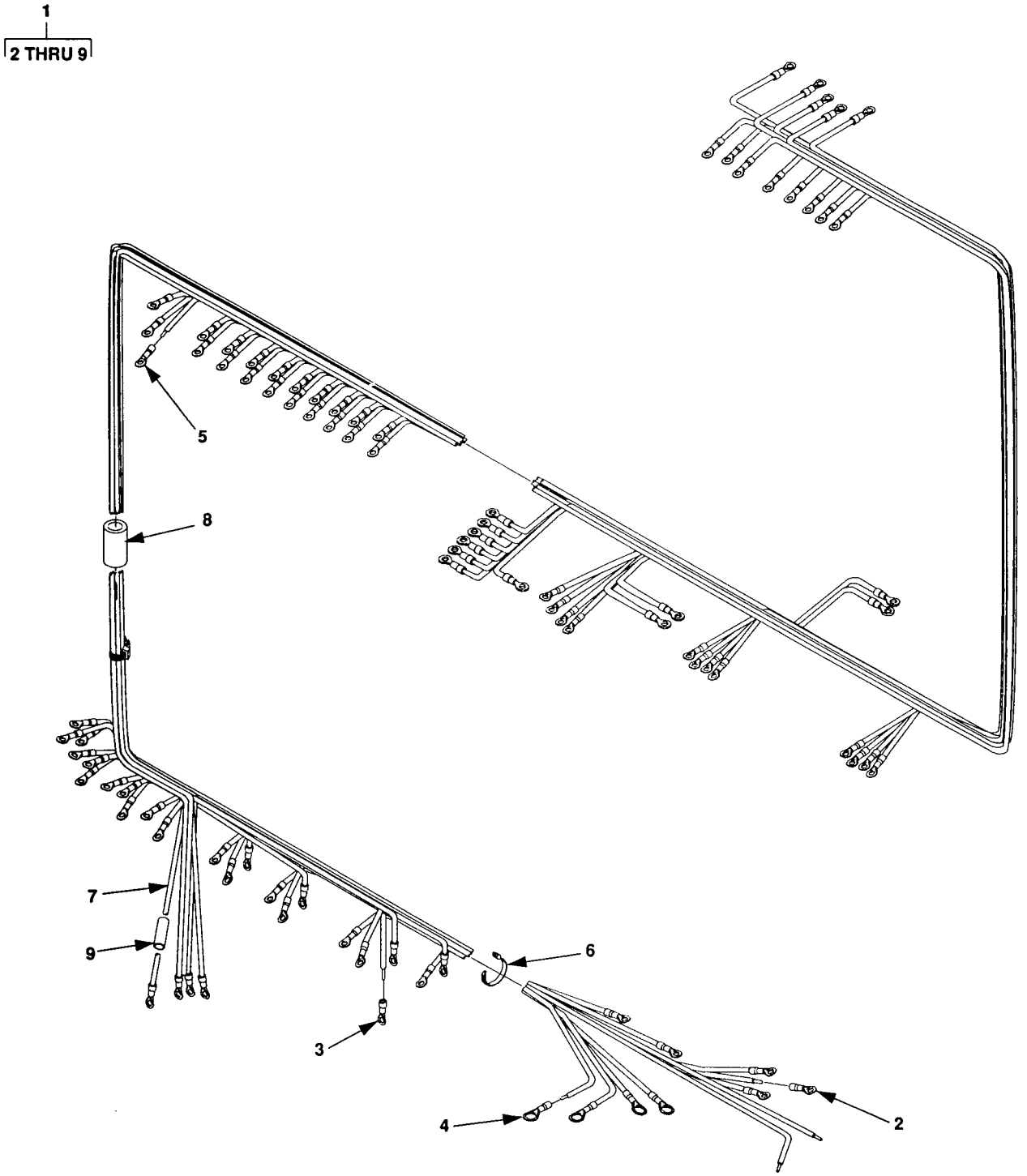

Figure F-15. Switch Box Harness Assembly (Sheef 1 of 2)

WIRE LIST					
WIRE NO.	TERMINATION		TERMINATION		WIRE ITEM NO.
	FROM	ITEM NO.	TO	TERMINAL ITEM NO.	
1	TB1-17	3	S10-2	3	7
2	TB1-2	3	PP-4	3	7
3	TB1-3	3	PP-3	3	7
4	TB1-4	3	K2–A2	2	7
5	TB1-5	3	XDS6-2	-	7
6	TB1-6	3	K2-22	3	7
7	TB1-7	3	K1-A2	2	7
8	TB1-8	3	K1-21	3	7
9	TB1-9	3	K1-C2	2	7
10	TB1-10	3	K2-11	3	7
11	TB1-10	3	PP-6	3	7
12	TB1-11	3	PP-8	3	7
13	TB1-12	3	K2-21	3	7
14	TB1-13	3	K1-22	3	7
15	TB1-16	3	S10-5	3	7
16	-	-	-	-	-
17	TB2-5	-	K2–C2	2	7
18	-	-	-	-	-
19	TB2-4	3	K2-Y	3	7
20	XDS6-1	-	R3-1	-	-
21	XDS5-2	-	PP-3	3	7
22	XDS5-1	-	PP-1	3	7
23	TB2-2	3	K1–C2	2	7
24	-	-	-	-	-
25	S2-2	3	S10-4	3	7
26	-	-	-	-	-
27	-	-	-	-	-
28	S1-6	3	PP-7	3	7
29	S1-2	3	S10-1	3	7
30	S1-5	3	K1-12	3	7
31	S2-6	3	PP-5	3	7
32	-	-	-	-	-
33	S2-5	3	K2-12	3	7
34	K1-11	3	PP-8	3	7
35	PP-4	3	N	4	7
36	XDS7-2	-	PP-1	3	7
37	XDS7-1	-	L3	4	7
38	K1-22	3	K2-32	3	7
39	K2-32	3	K1–C2	2	7
40	K2-22	3	K2–C2	2	7
41	K1-32	3	K2–C2	2	7
42	K1-33	3	K2-11	3	7
43	K2-Y	3	N	4	7
44	K2-X	3	S2-3	3	7
45	K2-33	3	K1-11	3	7
46	K1-X	3	S1-3	3	7
47	K1-Y	3	N	4	7
48	K1-Y	3	TB2-1	3	7
49	K2-A1	2	R3-2	-	7
50	PP-2	3	PP-3	3	7
51	TB1-18	3	TB2-3	3	7
52	G	5	TB2-3	3	7

Figure F-15. Switch Box Harness Assembly (Sheet 2 of 2)

SECTION II

(1) ITEM NO	(2) SMR CODE	(3) CAGEC	(4) PART NUMBER	(5) DESCRIPTION AND USABLE ON CODES (UOC)	(6) QTY
				GROUP 02 ELECTRICAL SYSTEM	
				FIG. 15 SWITCH BOX HARNESS ASSY	
1	XDFFF	97403	13229E5831	..HARN ASSY, SWITCHBOX UOC: ESP, EVQ, FMF	1
2	PAOZZ	96906	MS25036-110	...TERMINAL, LUG UOC: ESP, EVQ, FMF	9
3	PAOZZ	96906	MS25036-107	...TERMINAL, LUG UOC: ESP, EVQ, FMF	70
4	PAOZZ	96906	MS25036-155	...TERMINAL, LUG UOC: ESP, EVQ, FMF	4
5	PAOZZ	96906	MS25036-108	...TERMINAL, LUG UOC: ESP, EVQ, FMF	1
6	PAOZZ	96906	MS3367-4-9	...STRAP, TIEDOWN, ELECT UOC: ESP, EVQ, FMF	V
7	MFFZZ	81349	M22759/16-16-9	...WIRE, ELECTRICAL, MAKE AS REQUIRED UOC: ESP, EVQ, FMF	1
8	MFFZZ	81349	M23053/5-107-4	...INSULATION SLEEVING, 1.5 IN. REQUIRED UOC: ESP, EVQ, FMF	1
9	MFFZZ	81349	M23053/5-105-4	...INSULATION SLEEVING, MAKE AS REQUIRED UOC: ESP, EVQ, FMF	10
				END OF FIGURE	

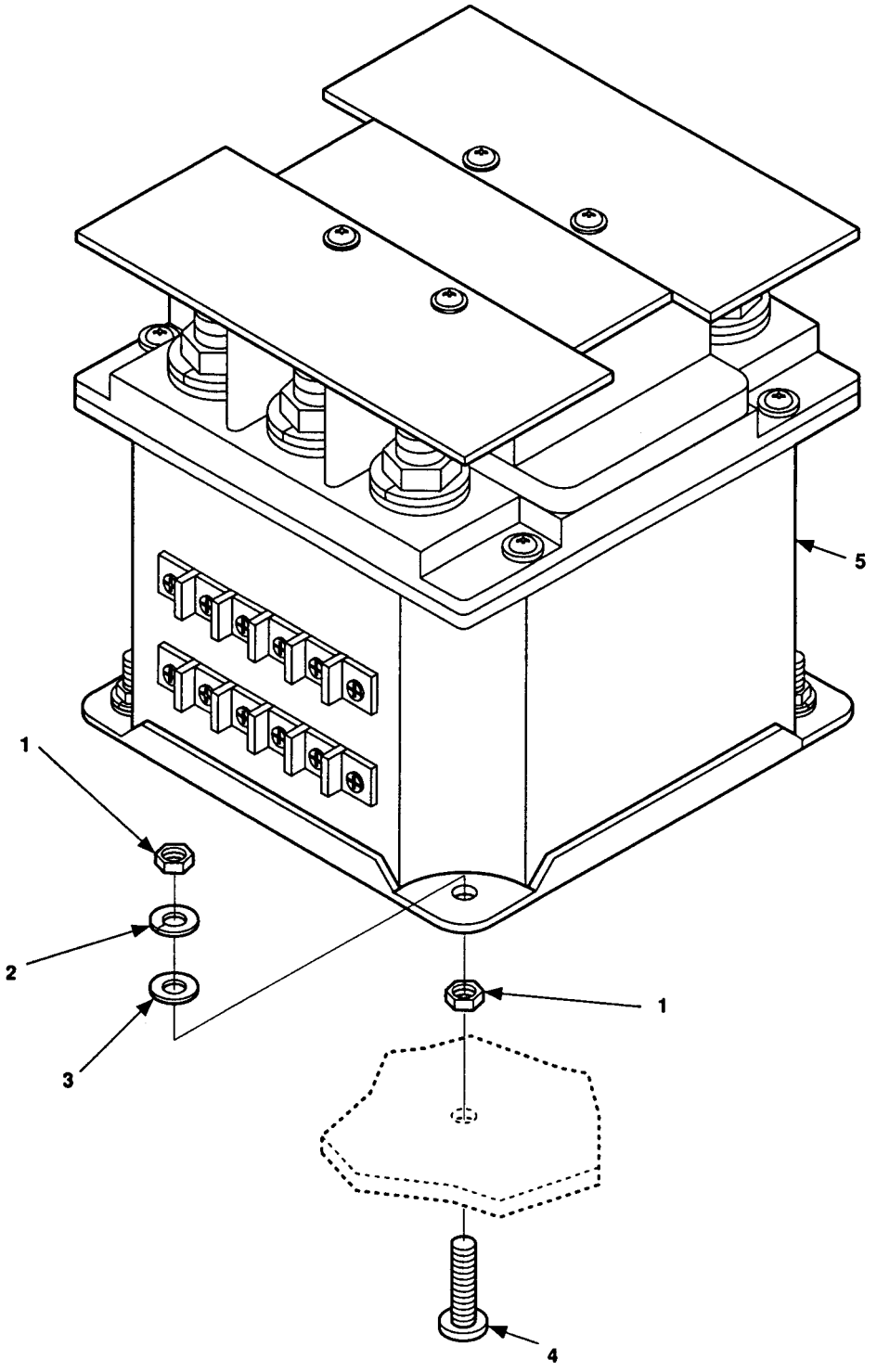

Figure F-16. Contactor

SECTION II

(1) ITEM NO	(2) SMR CODE	(3) CAGEC	(4) PART NUMBER	(5) DESCRIPTION AND USABLE ON CODES (UOC)	(6) QTY
				GROUP 02 ELECTRICAL SYSTEM	
				FIG. 16 CONTACTOR	
1	PAFZZ	96906	MS35650-304	..NUT, PLAIN, HEXAGON UOC: ESP, EVQ, FMF	16
2	PAFZZ	96906	MS35338-138	..WASHER, LOCK UOC: ESP, EVQ, FMF	8
3	PAFZZ	96906	MS15795-848	..WASHER, FLAT UOC: ESP, EVQ, FMF	8
4	PAFZZ	96906	MS51958-67	..SCREW, MACHINE UOC: ESP, EVQ, FMF	8
5	PAFZZ	7E656	JCG-6026	..CONTACTOR UOC: ESP, EVQ, FMF	2
				END OF FIGURE	

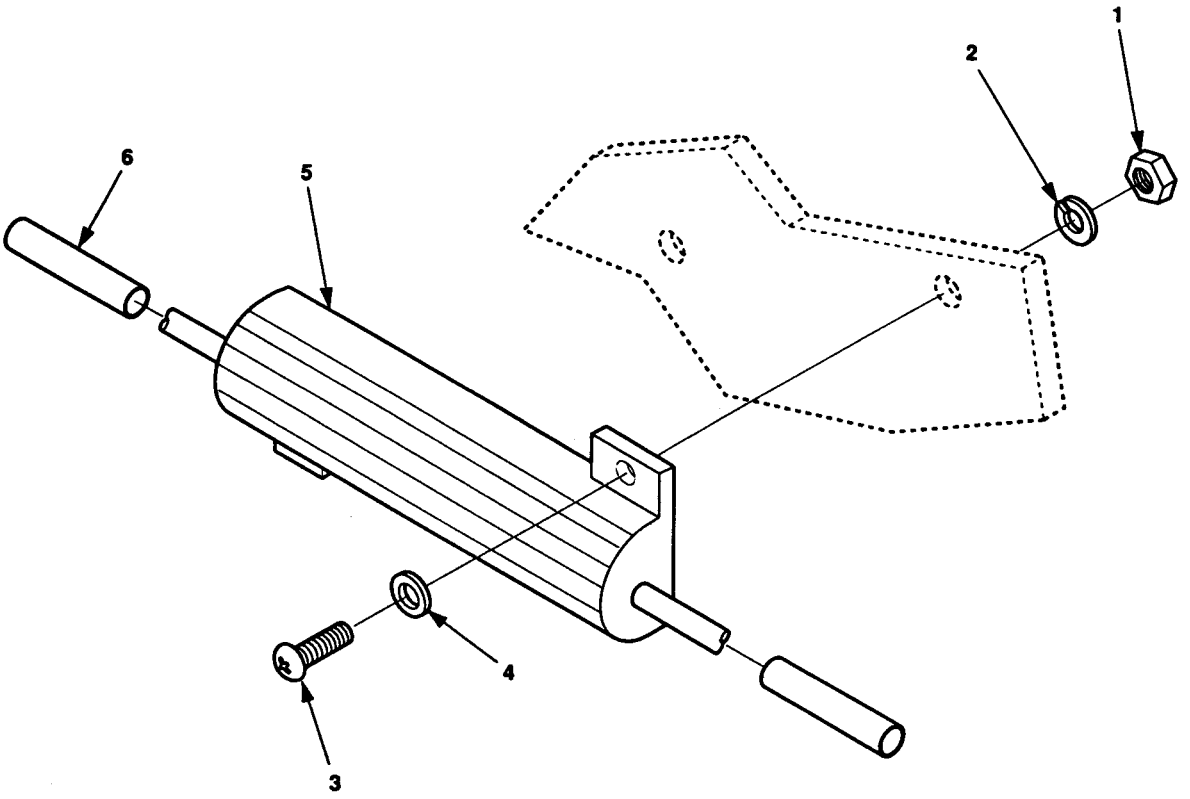

Figure F-17. Resistor R3

SECTION II

(1) ITEM NO	(2) SMR CODE	(3) CAGEC	(4) PART NUMBER	(5) DESCRIPTION AND USABLE ON CODES (UOC)	(6) QTY
				GROUP 02 ELECTRICAL SYSTEM	
				FIG. 17 RESISTOR R3	
1	PAFZZ	96906	MS35649-244	..NUT, PLAIN, HEXAGON UOC: ESP, EVQ, FMF	2
2	PAFZZ	96906	MS35338-135	..WASHER, LOCK UOC: ESP, EVQ, FMF	2
3	PAFZZ	96906	MS51957-16	..SCREW, MACHINE UOC: ESP, EVQ, FMF	2
4	PAFZZ	88044	AN960-C4	..WASHER, FLAT UOC: ESP, EVQ, FMF	2
5	PAFZZ	81349	RER75F2491R	..RESISTOR UOC: ESP, EVQ, FMF	1
6	MFFZZ	81349	M23053/5-105-0	..INSULATION SLEEVING, .75 IN. REQUIRED UOC: ESP, EVQ, FMF	2
				END OF FIGURE	

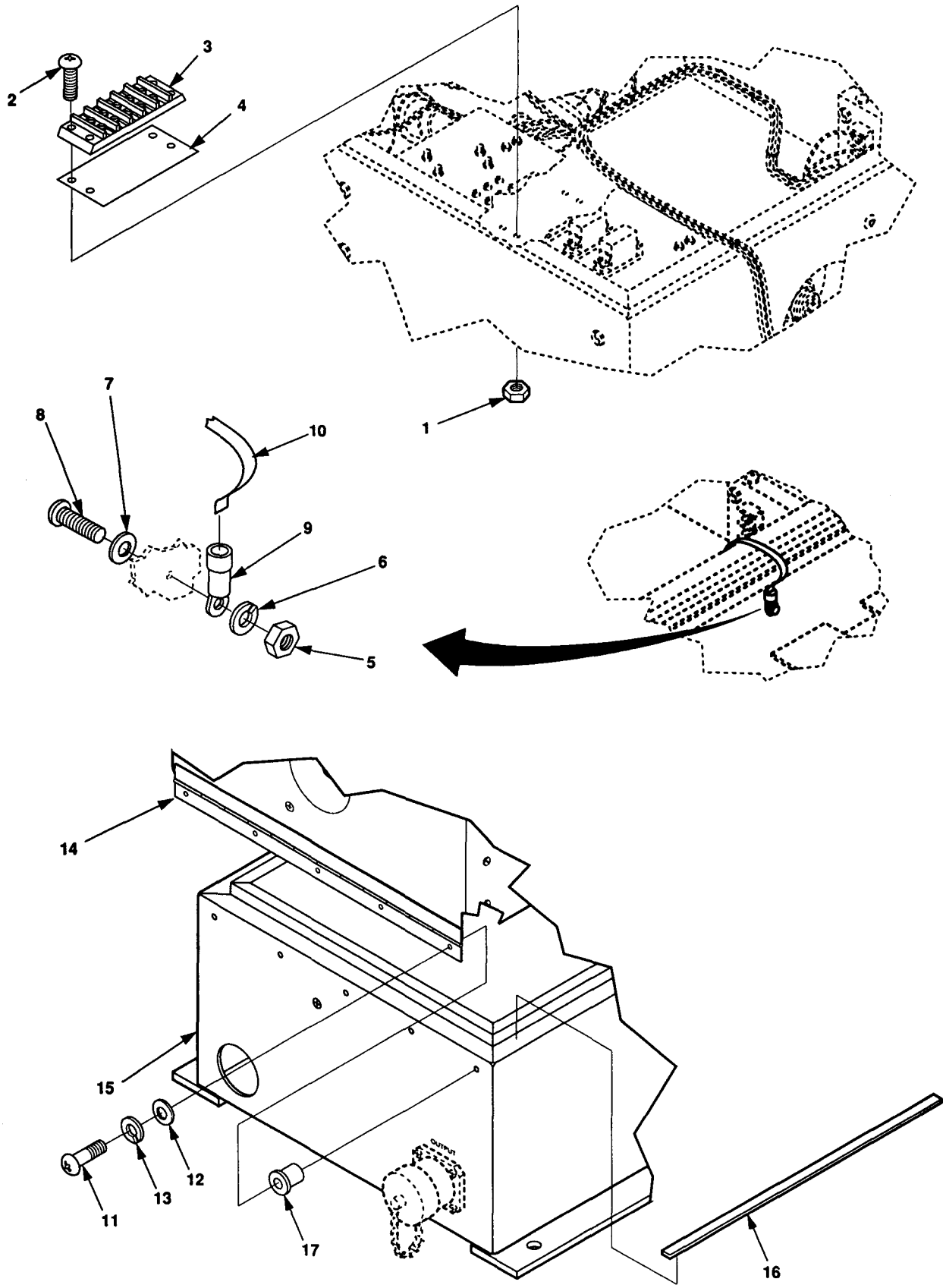

Figure F-18. Switch Box Assembly

SECTION II

(1) ITEM NO	(2) SMR CODE	(3) CAGEC	(4) PART NUMBER	(5) DESCRIPTION AND USABLE ON CODES (UOC)	(6) QTY
				GROUP 02 ELECTRICAL SYSTEM	
				FIG. 18 SWITCH BOX ASSEMBLY	
1	PAOZZ	96906	MS35649-264	..NUT, PLAIN, HEXAGON UOC: ESP, EVQ, FMF	4
2	PAOZZ	96906	MS51957-31	..SCREW, MACHINE UOC: ESP, EVQ, FMF	4
3	PAOZZ	81349	37TB5	..TERMINAL BOARD UOC: ESP, EVQ, FMF	1
4	PAOZZ	81349	MSA37TB5	..MARKER STRIP, TERMIN UOC: ESP, EVQ, FMF	1
5	PAOZZ	96906	MS35650-304	..NUT, PLAIN, HEXAGON UOC: ESP, EVQ, FMF	2
6	PAOZZ	96906	MS35338-138	..WASHER, LOCK UOC: ESP, EVQ, FMF	2
7	PAOZZ	96906	MS15795-848	..WASHER, FLAT UOC: ESP, EVQ, FMF	2
8	PAOZZ	96906	MS51958-64	..SCREW, MACHINE UOC: ESP, EVQ, FMF	2
9	PAOZZ	96906	MS25036-119	..TERMINAL, LUG UOC: ESP, EVQ, FMF	2
10	MOOZZ	81348	QQB575F30T0437	..BRAID, WIRE, 8 INCHES REQUIRED UOC: ESP, EVQ, FMF	1
11	PAFZZ	96906	MS51957-46	..SCREW, MACHINE UOC: ESP, EVQ, FMF	5
12	PAFZZ	96906	MS15795-841	..WASHER, FLAT UOC: ESP, EVQ, FMF	5
13	PAFZZ	96906	MS35338-137	..WASHER, LOCK UOC: ESP, EVQ, FMF	5
14	XDFZZ	97403	13229E5822	..COVER, SWITCHBOX UOC: ESP, EVQ, FMF	1
15	XDFFF	97403	13229E5821	..ENCLOSURE, SWITCHBOX UOC: ESP, EVQ, FMF	1
16	MOOZZ	81346	2B2B2C1F2	..STRIP, RUBBER, 14 INCHES REQUIRED UOC: ESP, EVQ, FMF	4
17	PAFZZ	96906	MS27130-CR93	..NUT, PLAIN, BLIND RIV 5 UOC: ESP, EVQ, FMF	

END OF FIGURE

SECTION II

(1) ITEM NO	(2) SMR CODE	(3) CAGEC	(4) PART NUMBER	(5) DESCRIPTION AND USABLE ON CODES (UOC)	(6) QTY
				GROUP 03 ACCESSORIES	
				FIG. 19 ACCESSORIES	
1	PAOZZ	97403	13211E7541	ADAPTER, CONTAINER	1
2	PAOZZ	97403	13211E7542	PIPE, METALLIC	1
3	PAOZZ	97403	13211E7543	PIPE, METALLIC	1
4	PAOZZ	97403	13211E7544	WASHER, RECESSED	1
5	PAOZZ	97403	13211E7546	GASKET	1
6	PAOZZ	88044	AN816-5-4	ADAPTER, STRAIGHT, PI	1
7	PAOZZ	00141	4328	SCREW, SHOULDER	2
8	XAOZZ	97403	13200E6363	CLAMP, STRAINER	1
9	PAOZZ	96906	MS35335-60	WASHER, LOCK	2
10	XAOZZ	97403	13211E7547	WASHER, FLAT	1
11	XAOZZ	97403	13200E6361	WASHER, FLAT	1
12	XAOZZ	97403	13211E7548	HEAD	1
13	PAOZZ	97403	13226E7741	SLIDE HAMMER, GROUND	1
14	PAOZZ	80244	GGG-H-86,TY10,CL	HAMMER, HAND	1
15	PAOOZ	15277	FSO216B122-1	ROD, GROUND WITH ATTACHMENTS	1
16	PAOZZ	56681	HLP1053A21-4	ROD, GROUND	3
17	PAOZZ	OBKK8	GRC 58	COUPLING, GROUND ROD	3
18	PAOZZ	73616	GRB58	DRIVE HEAD	1
19	PAOZZ	04655	70-801074	CLAMP, ELECTRICAL	1
20	PAOZZ	01667	CBA-70	TERMINAL, LUG	1
21	MOOZZ	81348	QQW343CO6B1B	WIRE, ELECTRICAL, 6 FT REQUIRED	2
22	PAOZZ	96906	MS25036-122	TERMINAL, LUG UOC: ESP, EVQ, EVR	1
23	PAOZZ	30554	72-2029-1	WRENCH, BOX	1

END OF FIGURE

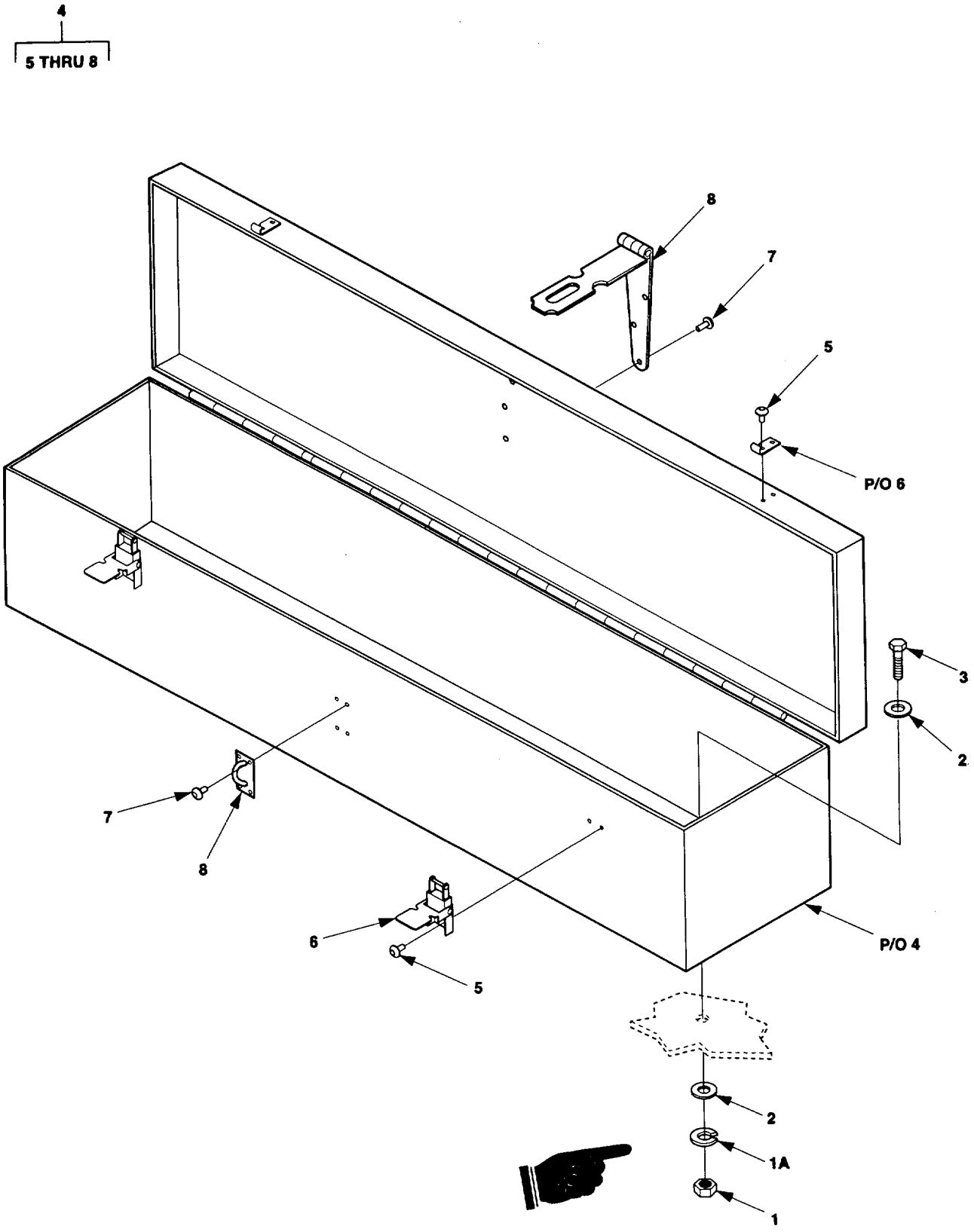

Figure F-20. Accessory Box.

SECTION II

(1) ITEM NO	(2) SMR CODE	(3) CAGEC	(4) PART NUMBER	(5) DESCRIPTION AND USABLE ON CODES (UOC)	(6) QTY
				GROUP 03 ACCESSORIES	
				FIG. 20 ACCESSORY BOX	
1	PAOZZ	96906	MS51922-9	NUT, SELF-LOCKING, HE UOC: EVQ	3
1	PAOZZ	96906	MS51922-9	NUT, SELF-LOCKING, HE UOC: ESP, EVR	4
1	PAOZZ	96906	MS35650-3314	NUT, PLAIN, HEXAGAN UOC: FMF, FMK	4
1A	PAOZZ	96906	MS35338-140	WASHER, LOCK UOC: FMF, FMK	4
2	PAOZZ	96906	MS51412-25	WASHER, FLAT UOC: EVQ	3
2	PAOZZ	96906	MS51412-25	WASHER, FLAT UOC: ESP	8
2	PAOZZ	96906	MS51412-25	WASHER, FLAT UOC: EVR	4
2	PAOZZ	96906	MS15795-812	WASHER, FLAT UOC: FMF, FMK	8
3	PAOZZ	80204	B1821BH031C075N	BOLT, MACHINE UOC: EVQ	4
3	PAOZZ	80204	B1821BH031C100N	BOLT, MACHINE UOC: ESP, EVR	4
3	PAOZZ	96906	MS35308-334	SCREW, CAP, HEX HEAD UOC: FMF, FMK	2
3	PAOZZ	96906	MS35308-338	SCREW, CAP, HEX HEAD UOC: FMF, FMK	2
4	XDOFF	97403	13229E7946	BOX, ACCESSORY	1
5	PAFZZ	96906	MS20613-4P5	RIVET, SOLID	8
6	PAFZZ	96906	MS18015-1	CATCH, CLAMPING	2
7	PAFZZ	96906	MS20427-4C6	RIVET, SOLID	8
8	PAFZZ	96906	MS27969-4	HASP, HINGED	1

END OF FIGURE

(1) ITEM NO	(2) SMR CODE	(3) CAGEC	(4) PART NUMBER	(5) DESCRIPTION AND USABLE ON CODES (UOC)	(6) QTY
				GROUP 03 ACCESSORIES	
				FIG. 20 ACCESSORY BOX	
1	PAOZZ	96906	MS51922-9	NUT,SELF-LOCKING,HE UOC:EVQ	3
1	PAOZZ	96906	MS51922-9	NUT,SELF-LOCKING,HE UOC:ESP,EVR	4
2	PAOZZ	96906	MS51412-25	WASHER,FLAT UOC:EVQ	3
2	PAOZZ	96906	MS51412-25	WASHER,FLAT UOC:ESP	8
2	PAOZZ	96906	MS51412-25	WASHER,FLAT UOC:EVR	4
3	PAOZZ	80204	B1821BH031C075N	BOLT,MACHINE UOC:EVQ	4
3	PAOZZ	80204	B1821BH031C100N	BOLT,MACHINE UOC:ESP,EVR	4
4	XDOFF	97403	13229E7946	BOX,ACCESSORY	1
5	PAFZZ	96906	MS20613-4P5	RIVET,SOLID	8
6	PAFZZ	96906	MS18015-1	CATCH,CLAMPING	2
7	PAFZZ	96906	MS20427-4C6	RIVET,SOLID	8
8	PAFZZ	96906	MS27969-4	HASP,HINGED UOC:EVQ	1

END OF FIGURE

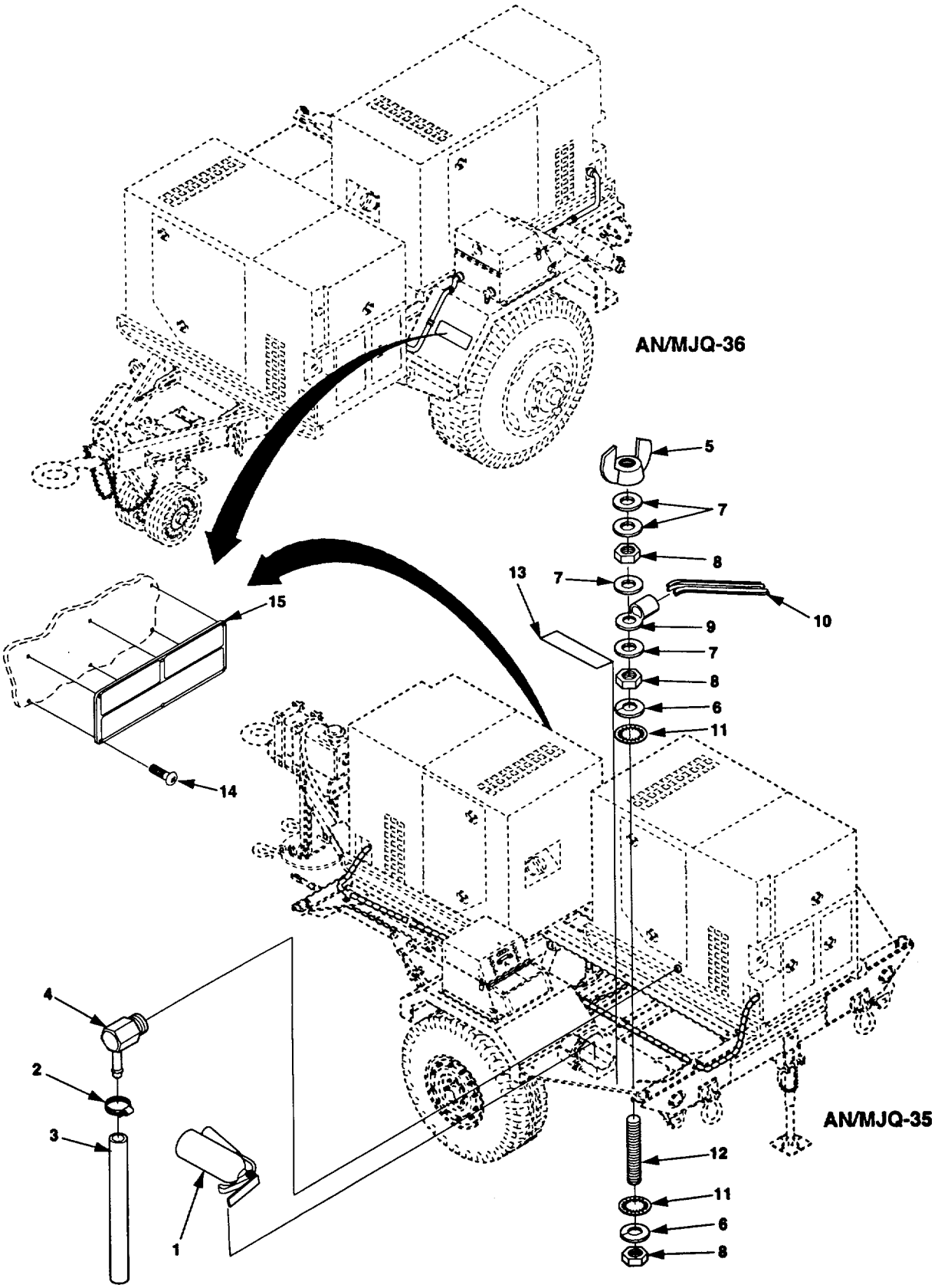

Figure F-21. Power Plant Fire Extinguisher, Oil Drain and Ground Wire. (Sheet 1 of 2)

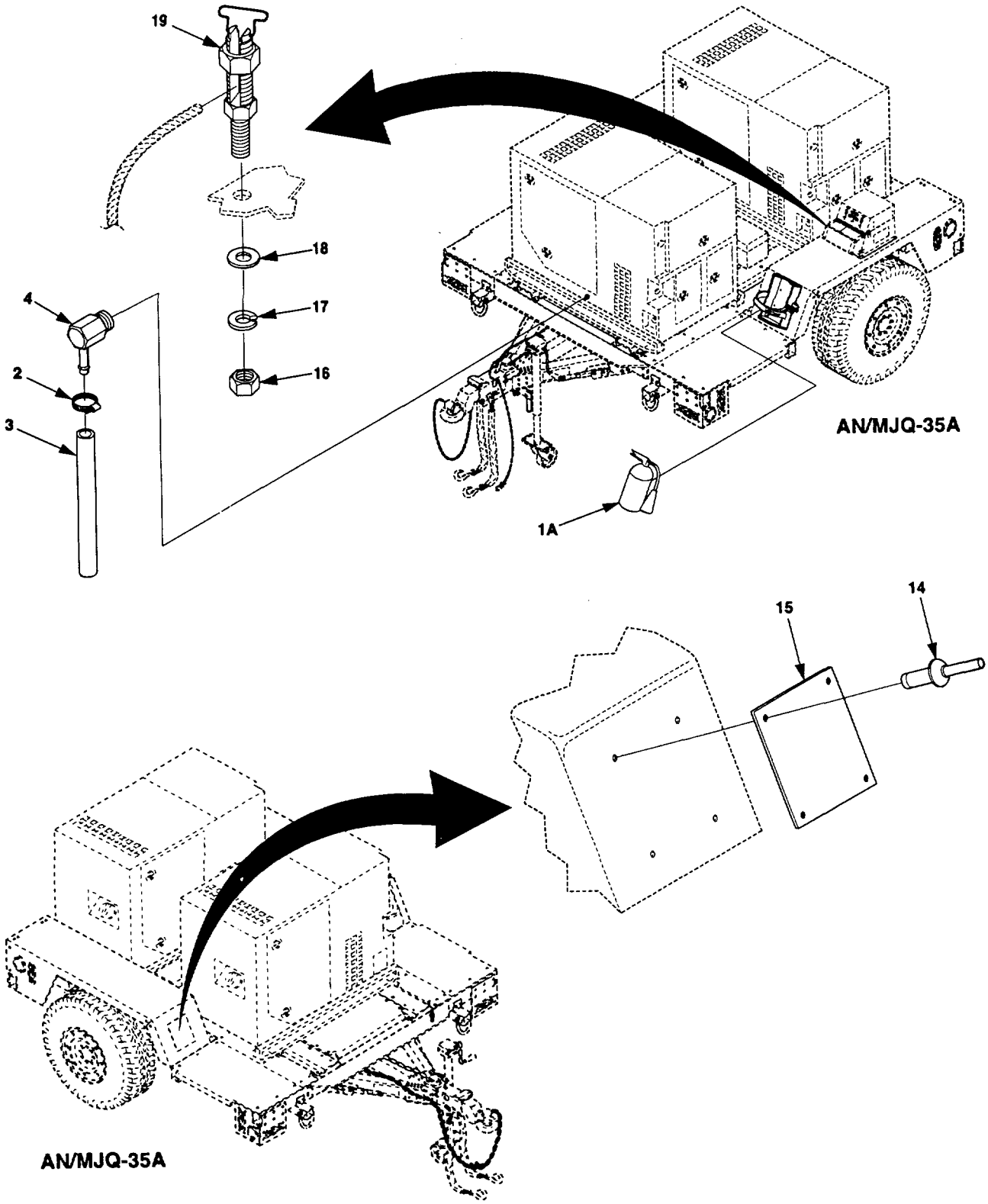

Figure F-21. Power Plant Fire Extinguisher, Oil Drain and Ground Wire. (Sheet 2 of 2)

SECTION II

(1) ITEM NO	(2) SMR CODE	(3) CAGEC	(4) PART NUMBER	(5) DESCRIPTION AND USABLE ON CODES (UOC)	(6) QTY
				GROUP 03 ACCESSORIES	
				FIG. 21 POWER PLANT, FIRE EXTINGUISHER, OIL DRAIN AND GROUND WIRE	
1	PAOZZ	58536	A-A-1106	.EXTINGUISHER,FIRE ..... UOC:ESP,EVQ	2
1A	PAOZZ	58536	A-A-1106	.EXTINGUISHER,FIRE ..... UOC:FMF	1
2	PAOZZ	96906	MS35842-11	.CLAMP,HOSE..... UOC:ESP,EVQ,FMF	1
3	MOOZZ	81349	M6000E00200	.HOSE,NONMETALLIC,20 INCHES REQUIRED..... UOC:ESP,EVQ,FMF	1
4	PAOZZ	96906	MS24519-7	.ELBOW, PIPE TO HOSE..... UOC:ESP,EVQ,FMF	1
5	PAOZZ	96906	MS35425-75	.NUT, PLAIN, WING ..... UOC:ESP,EVQ	1
6	PAOZZ	96906	MS35338-103	.WASHER, LOCK..... UOC:ESP,EVQ	2
7	PAOZZ	88044	AN961-616T	.WASHER, FLAT..... UOC:ESP,EVQ	4
8	PAOZZ	96906	NS16203-27	.NUT, PLAIN, HEXAGON ..... UOC:ESP,EVQ	3
9	PAOZZ	96906	MS25036-122	.TERMINAL, LUG..... UOC:ESP,EVQ	1
10	PAOZZ	81348	QQW343C06B1B.	WIRE, ELECTRICAL,MAKE AS REQUIRED ..... UOC:ESP,EVQ,FMF	1
11	PAOZZ	96906	MS35333-110	.WASHER, LOCK..... UOC:ESP,EVQ	2
12	PAOZZ	97403	13214E1223	.STUD, CONTINUOUS THR..... UOC:ESP,EVQ	1
13	MDOZZ	97403	13205E4918	.PLATE, IDENTIFICATION ..... UOC:ESP,EVQ	1
14	PAOZZ	81349	M24243/1-B403	.RIVET, BLIND ..... UOC:ESP,EVQ	6
14	PAOZZ	07707	AD45ABS	.RIVET, BLIND ..... UOC:FMF	4
15	MDOZZ	30554	13230E6561	.PLATE, IDENTIFICATION/SHIPPING DATA ..... UOC:FMF	1
15	MDOZZ	97403	13229E5666-1	.PLATE, IDENTIFICATION/TRANSPORTATION DATA UOC:EVQ	1
15	MDOZZ	97403	13229E5666-2	.PLATE, IDENTIFICATION/TRANSPORTATION DATA UOC:ESP	1
16	PAOZZ	96906	MS35691-3	.NUT, PLAIN, HEXAGON ..... UOC:FMF	1
17	PAOZZ	96906	MS35338-158	.WASHER, LOCK..... UOC:FMF	1

SECTION II

(1) ITEM NO	(2) SMR CODE	(3) CAGEC	(4) PART NUMBER	(5) DESCRIPTION AND USABLE ON CODES (UOC)	(6) QTY
18	PAOZZ	96906	MS15795-810	WASHER, FLAT..... UOC:FMF	1
19	PAOZZ	96906	MS39347-2	TERMINAL POST, SERVICE AND GROUND..... UOC:FMF	1

END OF FIGURE

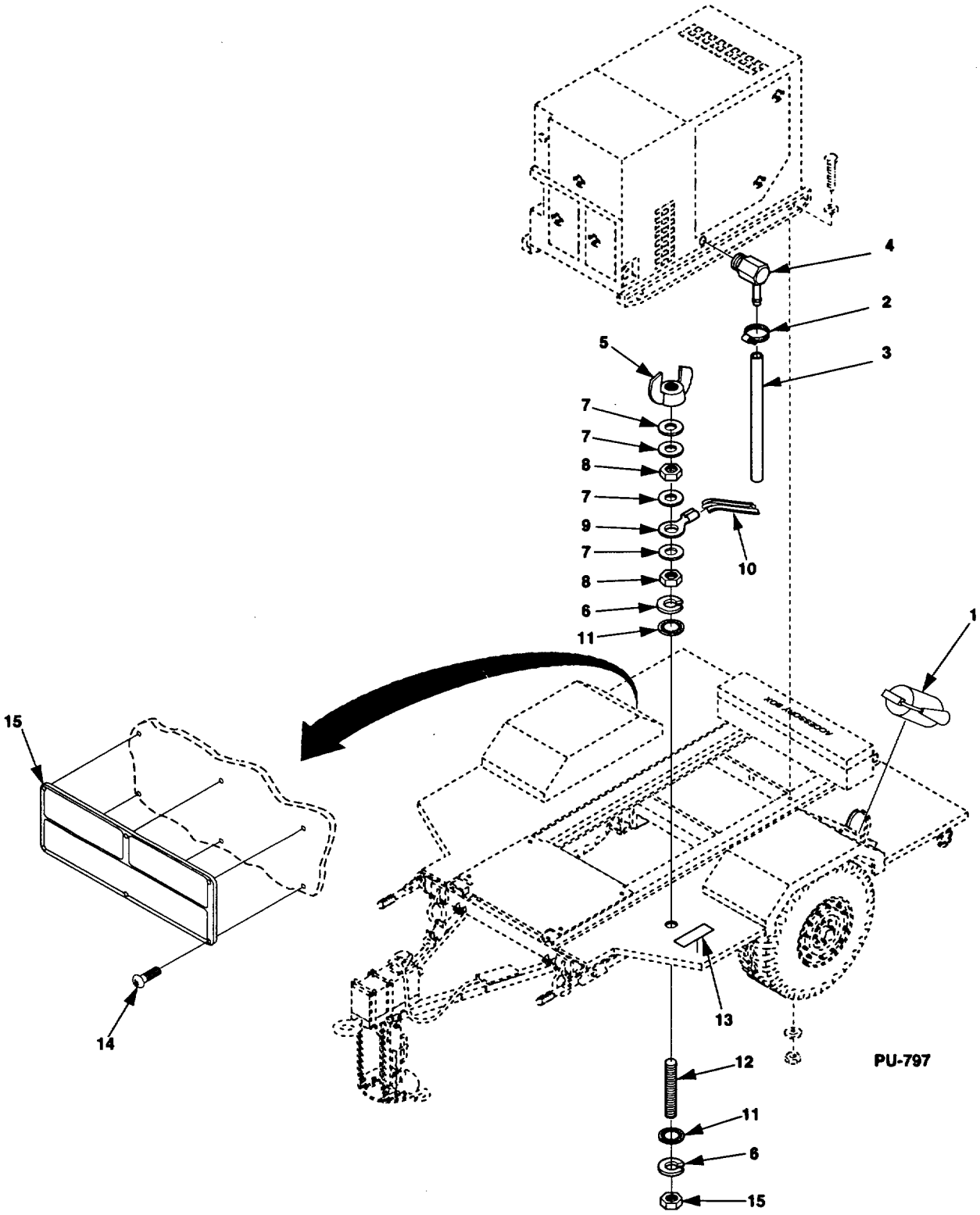

Figure F-22. Power Unit Fire Extinguisher, Oil Drain and Ground Wire (Sheet 1 of 2).

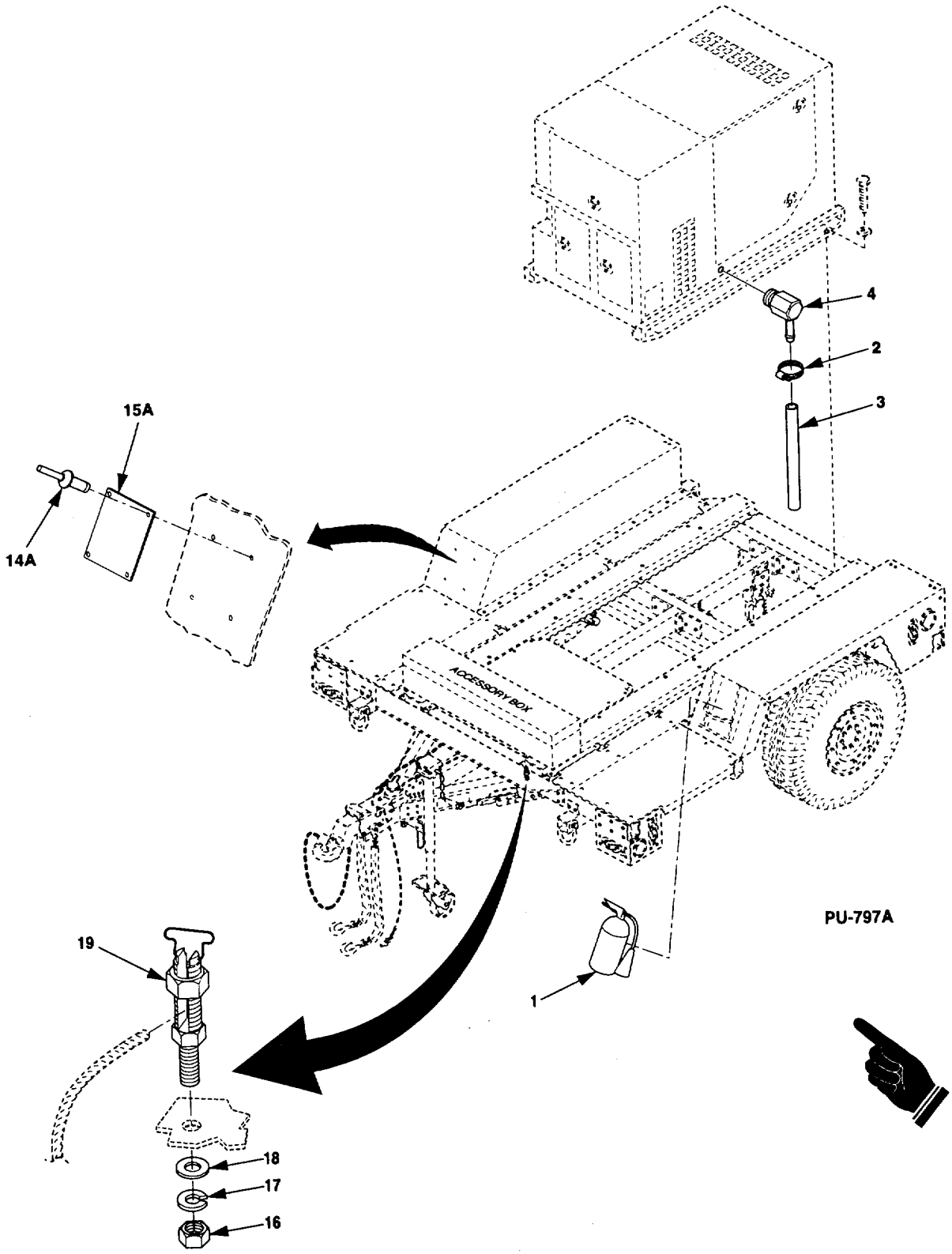

Figure F-22. Power Unit Fire Extinguisher, Oil Drain and Ground Wire (Sheet 2 of 2).

SECTION II

(1) ITEM NO	(2) SMR CODE	(3) CAGEC	(4) PART NUMBER	(5) DESCRIPTION AND USABLE ON CODES (UOC)	(6) QTY
				GROUP 03 ACCESSORIES	
				FIG. 22 POWER UNIT, FIRE EXTINGUISHER, OIL DRAIN AND GROUND WIRE	
1	PAOZZ	58536	A-A-1106	.EXTINGUISHER,FIRE ..... UOC:EVR,FMK	1
2	PAOZZ	96906	MS35842-11	.CLAMP,HOSE..... UOC:EVR,FMK	1
3	MOOZZ	81349	M6000E00200	.HOSE,NONMETALLIC,20 INCHES REQUIRED..... UOC:EVR,FMK	1
4	PAOZZ	96906	MS24519-7	.ELBOW, PIPE TO HOSE..... UOC:EVR,FMK	1
5	PAOZZ	96906	MS35425-75	.NUT, PLAIN, WING ..... UOC:EVR	1
6	PAOZZ	96906	MS35338-103	.WASHER, LOCK..... UOC: EVR	2
7	PAOZZ	88044	AN961-616T	.WASHER, FLAT..... UOC:EVR	4
8	PAOZZ	96906	NS16203-27	.NUT, PLAIN, HEXAGON ..... UOC:EVR	3
9	PAOZZ	96906	MS25036-122	.TERMINAL, LUG..... UOC:EVR	1
10	MOOZZ	81348	QQW343C06B1B	.WIRE, ELECTRICAL,MAKE AS REQUIRED..... UOC:EVR,FMK	1
11	PAOZZ	96906	MS35333-110	.WASHER, LOCK..... UOC:EVR	2
12	PAOZZ	97403	13214E1223	.STUD, CONTINUOUS THR..... UOC: EVR	1
13	MDOZZ	97403	13205E4918	.PLATE, IDENTIFICATION ..... UOC:EVR	1
14	PAOZZ	81349	M24243/1-B403	.RIVET, BLIND ..... UOC: EVR	6
14A	PAOZZ	07707	AD45ABS	.RIVET, BLIND ..... UOC:FMK	4
15	MDOZZ	97403	13229E5666-13	.PLATE, IDENTIFICATION/TRANSPORTATION DATA UOC:EVR	1
15A	MDOZZ	30554	13230E6521	.PLATE, IDENTIFICATION/SHIPPING DATA ..... UOC:FMK	1
16	PAOZZ	96906	MS35691-3	.NUT, PLAIN, HEXAGON ..... UOC:FMK	1
17	PAOZZ	96906	MS35338-158	.WASHER, LOCK..... UOC:FMK	1
18	PAOZZ	96906	MS15795-810	.WASHER, FLAT..... UOC:FMK	1
19	PAOZZ	96906	MS39347-2	.TERMINAL POST, SERVICE AND GROUND..... UOC:FMK	1

END OF FIGURE

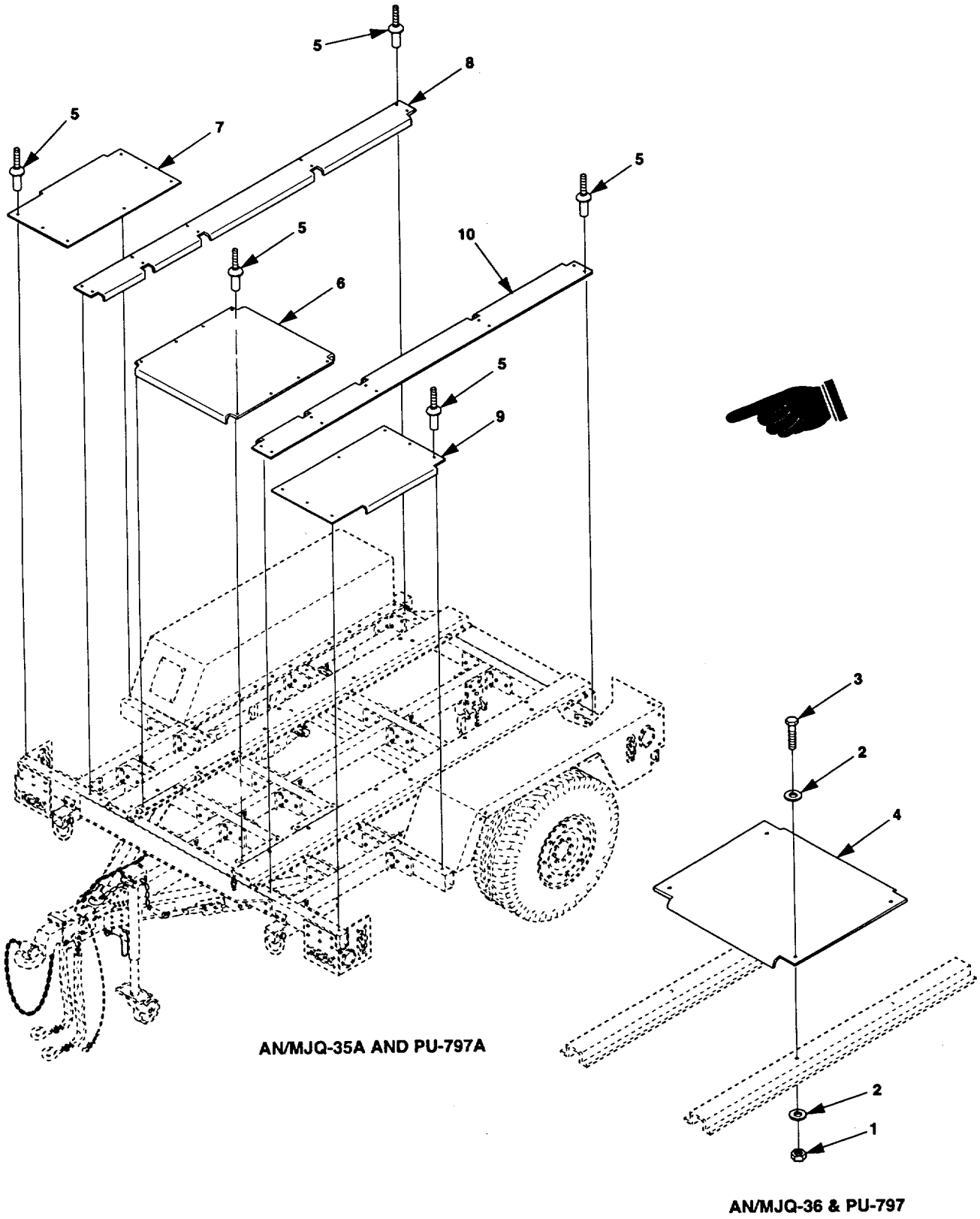

Figure F-23. Platforms.

SECTION II

(1) ITEM NO	(2) SMR CODE	(3) CAGEC	(4) PART NUMBER	(5) DESCRIPTION AND USABLE ON CODES (UOC)	(6) QTY
				GROUP 03 ACCESSORIES	
				FIG. 23 PLATFORMS	
1	PAOZZ	96906	MS51922-17	NUT,SELF-LOCKING,HE ..... UOC:ESP,EVR	4
2	PAOZZ	96906	MS51412-7	WASHER,FLAT..... UOC:ESP,EVR	8
3	PAOZZ	80204	B1821BH038C100N	SCREW,CAP,HEXAGON H..... UOC:ESP,EVR	4
4	XDOZZ	97403	13229E9621-1	PLATFORM..... UOC:ESP,EVR	1
5	PAFZZ	17446	MGLP-R8-10	RIVET,STEEL SHANK..... UOC:FMF,FMK	42
6	XDFZZ	30554	13230E6568	FLOOR,CENTER ..... UOC:FMF,FMK	1
7	XDFZZ	30554	13230E6567-1	FLOOR,SIDE,RH ..... UOC:FMF,FMK	1
8	XDFZZ	30554	13230E6564-1	FLOOR,SIDE,INNER,RH ..... UOC:FMF,FMK	1
9	XDFZZ	30554	13230E6567-2	FLOOR,SIDE,LH..... UOC:FMF,FMK	1
10	XDFZZ	30554	13230E6564-2	FLOOR,SIDE,INNER,LH..... UOC:FMF,FMK	1

END OF FIGURE

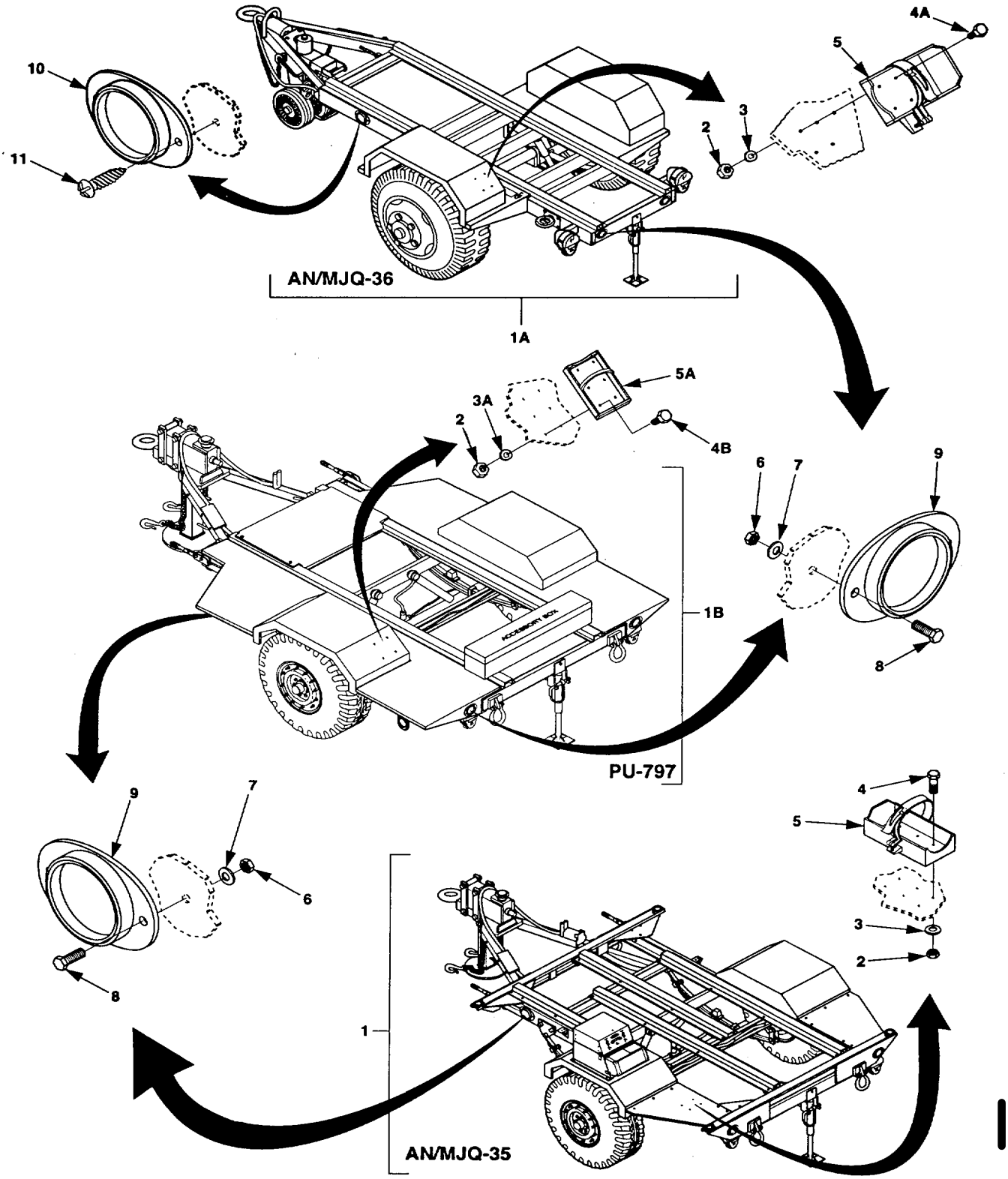

Figure F-24. Power Plant/Power Unit trailer Assembly (Sheet 1 of 2).

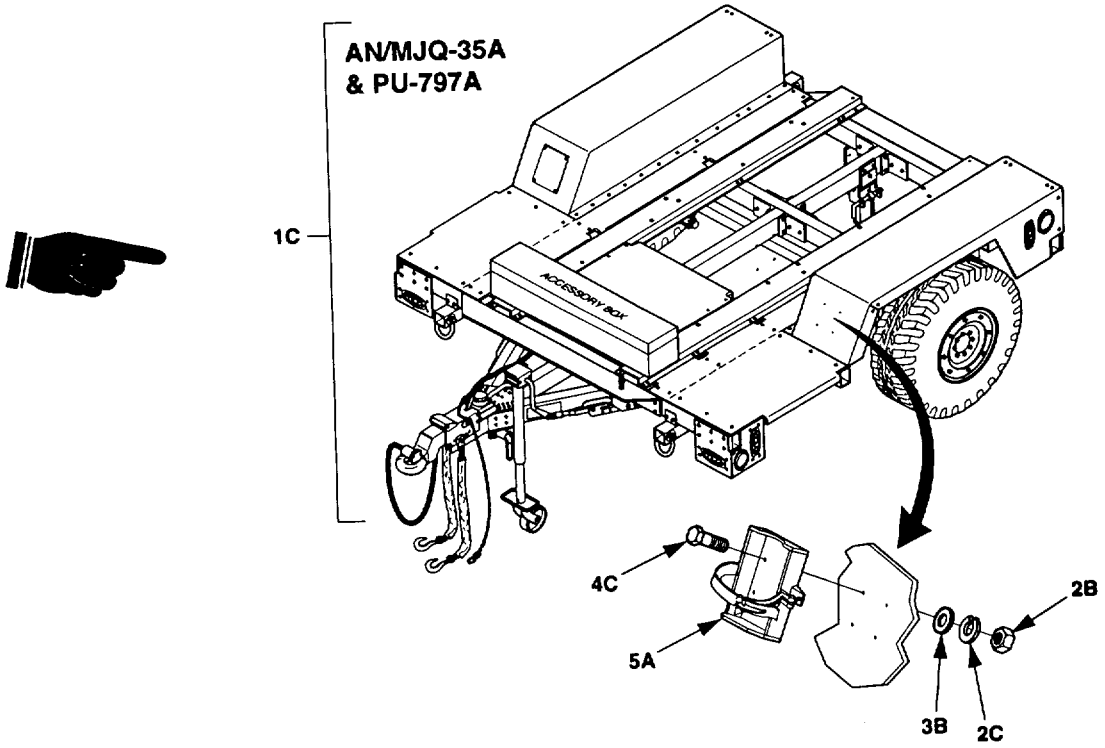

Figure F-24. Power Plant/Power Unit Trailer Assembly (Sheet 2 of 2).

SECTION II

(1) ITEM NO	(2) SMR CODE	(3) CAGEC	(4) PART NUMBER	(5) DESCRIPTION AND USABLE ON CODES (UOC)	(6) QTY
				GROUP 04 TRAILER ASSEMBLY	
				FIG.24 POWER PLANT/POWER UNIT TRAILER ASSEMBLY	
1	XCFFF	19099	13229E5650-TLR	TRAILER ASSEMBLY..... UOC:EVQ	1
1A	PBFFF	97403	13229E5825	TRAILER ASSEMBLY..... UOC:ESP	1
1B	PBFFF	97403	13229E5749-1	TRAILER ASSEMBLY..... UOC:EVR	1
1C	PBFFF	30554	13230E6565	TRAILER ASSEMBLY..... UOC:FMF,FMK	1
2	PAOZZ	96906	MS51922-17	.NUT,SELF-LOCKING,HE ..... UOC:ESP,EVQ	8
2A	PAOZZ	96906	MS51922-17	.NUT,SELF-LOCKING,HE ..... UOC:EVR	4
2B	PAOZZ	96906	MS35650-3384	.NUT,PLAIN,HEXAGON ..... UOC:FMF,FMK	4
2C	PAOZZ	96906	MS35338-141	.WASHER,LOCK..... UOC:FMF,FMK	4
3	PAOZZ	96906	MS51412-7	.WASHER,FLAT..... UOC:ESP,EVQ	8
3A	PAOZZ	96906	MS51412-27	.WASHER,FLAT..... UOC:EVR	4
3B	PAOZZ	96906	MS15795-813	.WASHER,FLAT..... UOC:FMF,FMK	8
4	PAOZZ	96906	B1821BH038C075N	SCREW,CAP,HEXAGON H..... UOC:EVQ	8
4A	PAOZZ	96906	B1821BH038C100N	SCREW,CAP,HEXAGON H..... UOC:ESP	8
4B	PAOZZ	96906	B1821BH038C075N	SCREW,CAP,HEXAGON H..... UOC:EVR	4
4C	PAOZZ	96906	MS35308-360	.SCREW,CAP,HEXAGON H..... UOC:FMF,FMK	4
5	PAOZZ	97403	13214E1235	.BRACKET,FIRE EXTING..... UOC:ESP,EVQ	2
5A	PAOZZ	97403	13214E1235	.BRACKET,FIRE EXTING..... UOC:EVR,FMF,FMK	1
6	PAOZZ	96906	MS51922-1	.NUT,SELF-LOCKING,HE ..... UOC:EVQ,EVR	12
6A	PAOZZ	96906	MS51922-1	.NUT,SELF-LOCKING,HE ..... UOC:ESP	8
7	PAOZZ	96906	MS51412-23	.WASHER,FLAT..... UOC:EVQ	12
7	PAOZZ	96906	MS51412-4	.WASHER,FLAT..... UOC:ESP	8
7	PAOZZ	96906	MS51412-4	.WASHER,FLAT..... UOC:EVR	12
8	PAOZZ	80204	B1821BH025C088N	.SCREW,CAP,HEXAGON H..... UOC:EVQ,EVR	12

SECTION II

(1) ITEM NO	(2) SMR CODE	(3) CAGEC	(4) PART NUMBER	(5) DESCRIPTION AND USABLE ON CODES (UOC)	(6) QTY
8A	PAOZZ	80204	B1821BH025C075N	.SCREW,CAP,HEXAGON H..... UOC:ESP	8
9	PAOZZ	96906	MS35387-1	.REFLECTOR,INDICATIN RED..... UOC:ESP,EVQ,EVR	4
10	PAOZZ	96906	MS35387-2	.REFLECTOR,INDICATIN AMBER..... UOC:ESP,EVQ,EVR	2
11	PAOZZ	96906	MS51861-37	.SCREW,TAPPING ..... UOC:ESP	4

END OF FIGURE

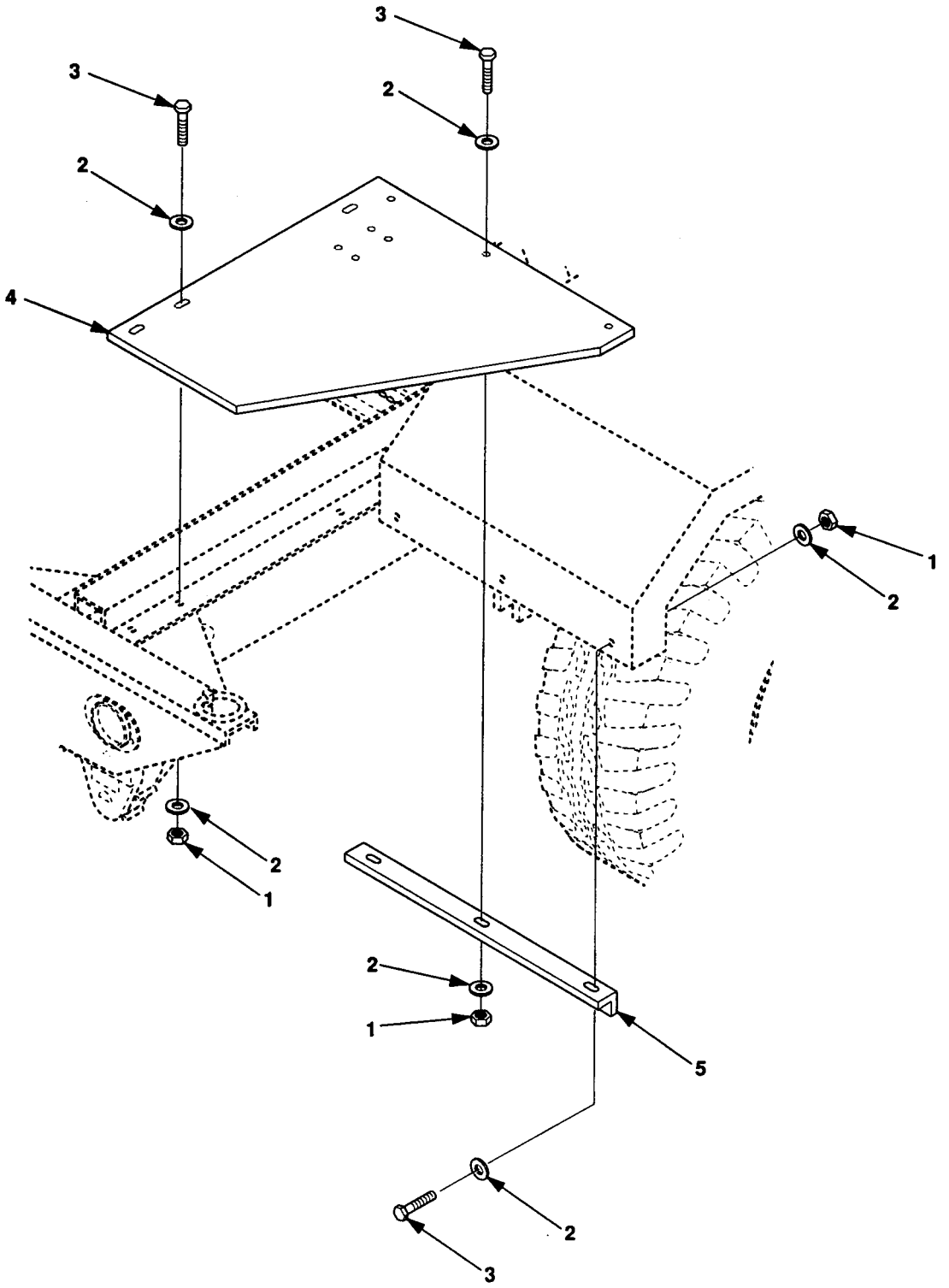

Figure F-25. Splash Guard

(1) ITEM NO	(2) SMR CODE	(3) CAGEC	(4) PART NUMBER	(5) DESCRIPTION AND USABLE ON CODES (UOC)	(6) QTY
				GROUP 04 TRAILER ASSEMBLY	
				FIG. 25 SPLASH GUARD	
1	PAOZZ	96906	MS51922-17	NUT,SELF-LOCKING,HE UOC:EVQ	18
2	PAOZZ	96906	MS51922-17	WASHER,FLAT UOC:EVQ	36
3	PAOZZ	80204	B1821BH038C150N	SCREW,CAP,HEXAGON H UOC:EVQ	18
4	XDOZZ	97403	13229E5812	GUARD,SPLASH UOC:EVQ	2
5	XDOZZ	97403	13229E5803	BRACKET,SPLASH GUAR UOC:EVQ	2
				END OF FIGURE	

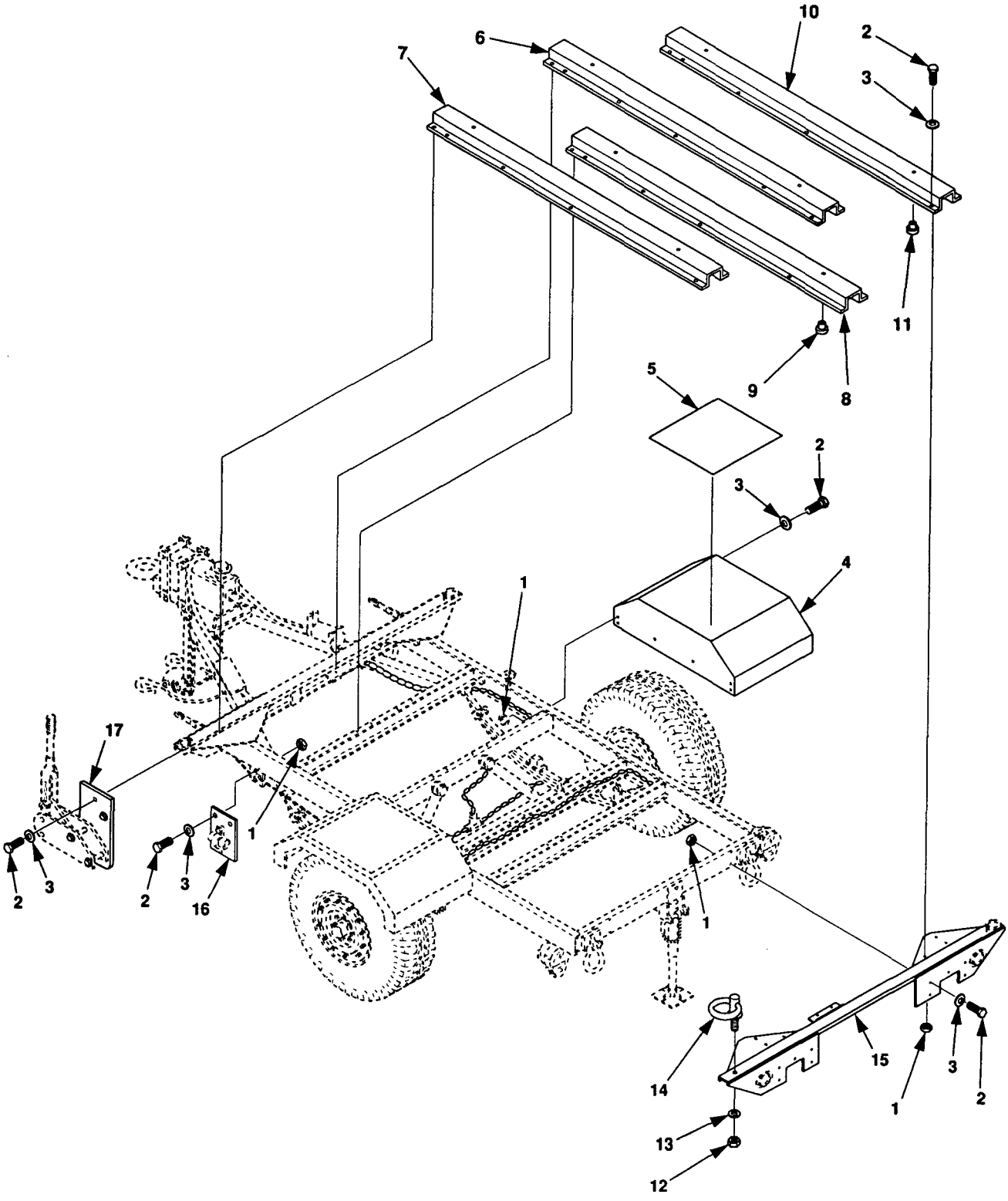

Figure F-26. Fenders, Rails, Lifting Rings and Brackets, One Ton Trailer, AN/MJQ-35

(1) ITEM NO	(2) SMR CODE	(3) CAGEC	(4) PART NUMBER	(5) DESCRIPTION AND USABLE ON CODES (UOC)	(6) QTY
				GROUP 04 TRAILER ASSEMBLY	
				FIG. 26 FENDERS, RAILS, LIFTING RING AND BRACKETS, ONE TON TRAILER, AN/MJQ-35	
1	PAFZZ	96906	MS51922-17	NUT,SELF-LOCKING,HE UOC:EVQ	74
2	PAFZZ	80204	B1821BH038C150N	SCREW,CAP,HEXAGON H UOC:EVQ	74
3	PAFZZ	96906	MS51412-7	WASHER,FLAT UOC:EVQ	74
4	XDFFF	97403	13229E9622	FENDER UOC:EVQ	2
5	MOOZZ	19099	13229E9622-3	DECK COVERING MAKE FROM P/N 22806-000-00 (88900),AS REQUIRED UOC:EVQ	1
6	XDFZZ	97403	13229E9625	RAIL,MOUNTING REAR GENERATOR, ROADSIDE UOC:EVQ	1
7	XDFFF	97403	13229E9623	RAIL,MOUNTING FORWARD GENERATOR, ROADSIDE UOC:EVQ	1
8	PAFZZ	96906	MS27130-CR68	NUT,BLIND RIVET UOC:EVQ	1
9	XDFZZ	97403	13229E9626	RAIL,MOUNTING REAR GENERATOR, CURBSIDE UOC:EVQ	1
10	XDFFF	97403	13229E9624	RAIL,MOUNTING FORWARD GENERATOR, CURBSIDE UOC:EVQ	1
11	PAFZZ	96906	MS27130-CR68	NUT,BLIND RIVET UOC:EVQ	1
12	PAOZZ	96906	MS51968-23	NUT,PLAIN,HEXAGON UOC:EVQ	4
13	PAOZZ	96906	MS51412-13A	WASHER,FLAT UOC:EVQ	4
14	PAOZZ	97403	13229E9629-3	RING,LIFTING UOC:EVQ	4
15	XDFZZ	97403	13229E9627	BRACKET,LIFTING UOC:EVQ	2
16	XDOZZ	97403	13229E2308	PLATE,RELOCATING UOC:EVQ	2
17	XDOZZ	97403	13229E9628	BRACKET,BRAKE RELOC UOC:EVQ	2
				END OF FIGURE	

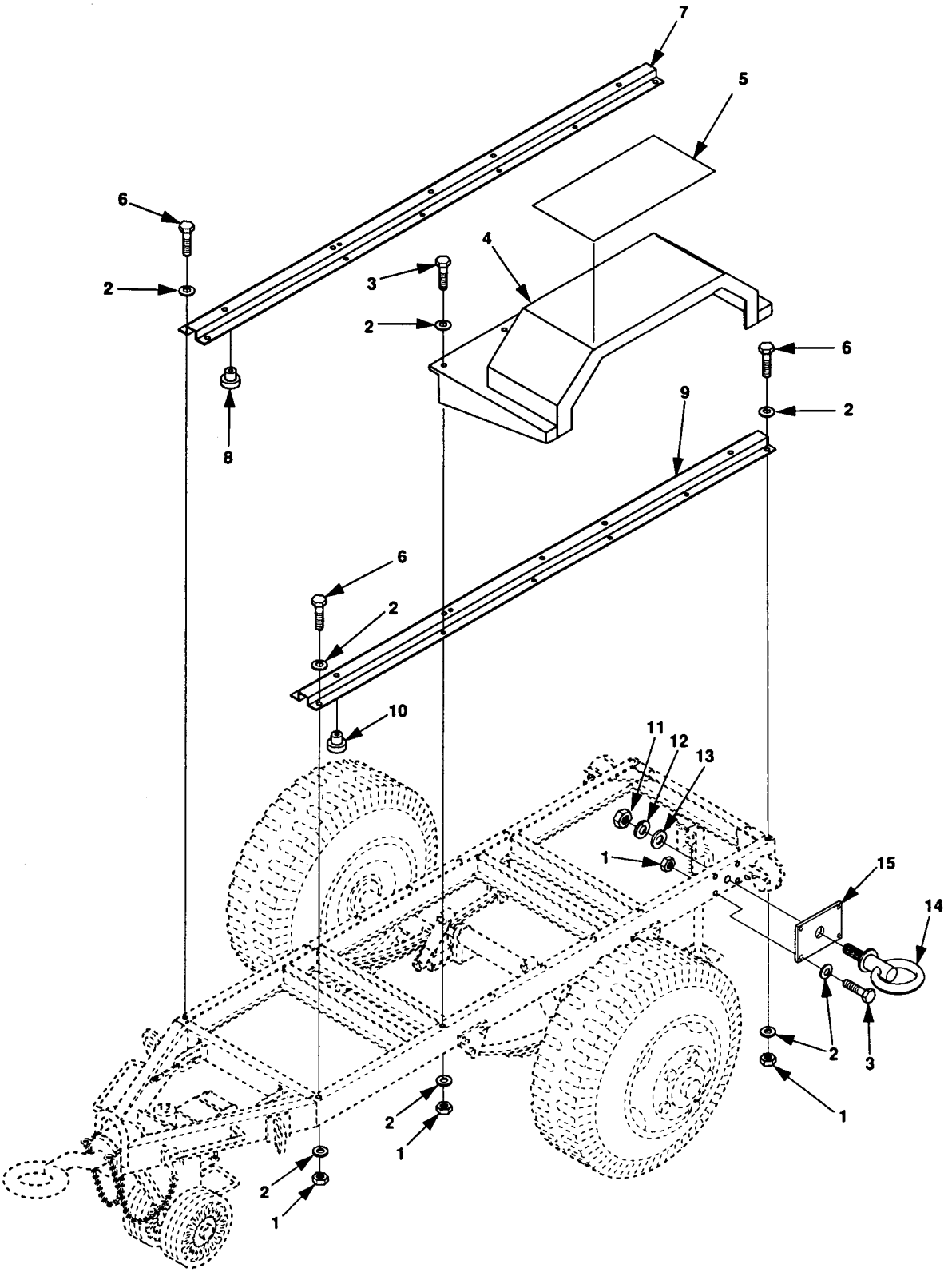

Figure F-27. 1 1/2 Ton Trailer, AN MJQ-36 Fender

(1) ITEM NO	(2) SMR CODE	(3) CAGEC	(4) PART NUMBER	(5) DESCRIPTION AND USABLE ON CODES (UOC)	(6) QTY
				GROUP 04 TRAILER ASSEMBLY	
				FIG.27 1 1/2 TON TRAILER, AN/MJQ-36 FENDER	
1	PAFZZ	96906	MS51922-17	NUT,SELF-LOCKING,HE UOC:ESP	42
2	PAFZZ	96906	MS51412-7	WASHER,FLAT UOC:ESP	76
3	PAFZZ	80204	B1821BH038C125N	SCREW,CAP,HEXAGON H UOC:ESP	38
4	XDFFF	97403	13229E5817	FENDER UOC:ESP	2
5	MOOZZ	19099	13229E5817-6	DECK COVERING MAKE FROM P/N 22806-000-00 (88900),AS REQUIRED UOC:ESP	1
6	PAFZZ	80204	B1821BH038C600N	SCREW,CAP,HEXAGON H UOC:ESP	4
7	XDFFF	97403	13229E5677	RAIL,MOUNTING CURBSIDE UOC:ESP	1
8	PAFZZ	96906	MS27130-CR68	NUT,BLIND RIVET UOC:ESP	1
9	XDFFF	97403	13229E5748	RAIL,MOUNTING ROADSIDE UOC:ESP	1
10	PAFZZ	96906	MS27130-CR68	NUT,BLIND RIVET UOC:ESP	1
11	PAOZZ	96906	MS51968-23	NUT,PLAIN,HEXAGON UOC:ESP	2
12	PAOZZ	96906	MS51415-11	WASHER,LOCK UOC:ESP	2
13	PAOZZ	96906	MS51412-13	WASHER,FLAT UOC:ESP	2
14	PAOZZ	97403	13229E9629-4	RING,LIFTING UOC:ESP	2
15	XDOZZ	97403	13229E5818	BRACKET,TIEDOWN UOC:ESP	2

END OF FIGURE

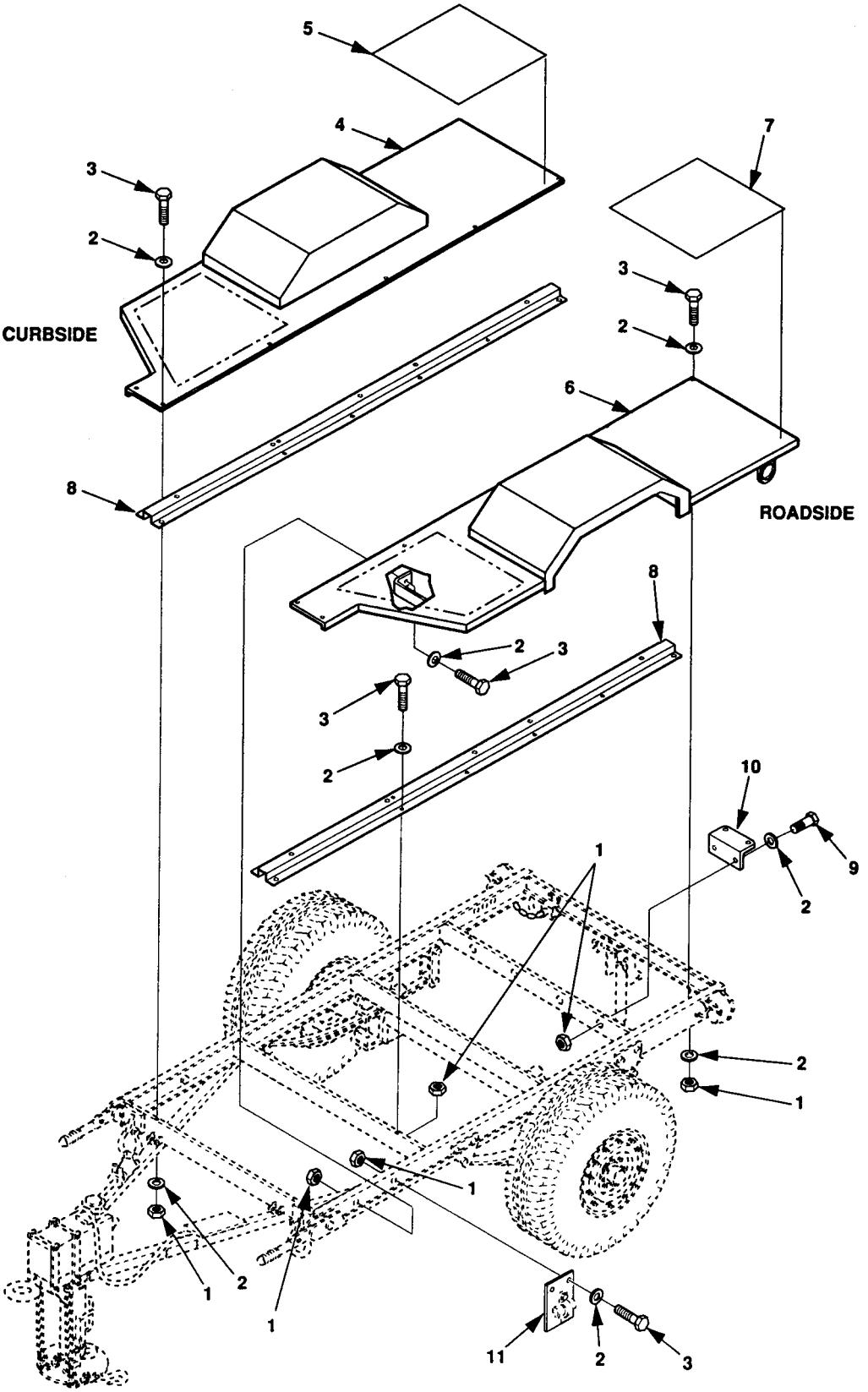

Figure F-28. Fenders, One Ton Trailer, PU-797

SECTION II

(1) ITEM NO	(2) SMR CODE	(3) CAGEC	(4) PART NUMBER	(5) DESCRIPTION AND USABLE ON CODES (UOC)	(6) QTY
				GROUP 04 TRAILER ASSEMBLY	
				FIG.28 FENDERS, ONE TON TRAILER, PU-797	
1	PAFZZ	96906	MS51922-17	.NUT,SELF-LOCKING,HE ..... UOC:EVR	60
2	PAFZZ	96906	MS51412-27	.WASHER,FLAT..... UOC:EVR	104
3	PAFZZ	80204	B1821BH038C150N	SCREW,CAP,HEXAGON H..... UOC:EVR	56
4	XDFFF	97403	13229E9619-1	.FENDER,CURBSIDE..... UOC:EVR	1
5	MOOZZ	88900	22806-000-00	.DECK COVERING MAKE, AS REQUIRED..... UOC:EVR	1
6	XDFFF	97403	13229E9620-1	.FENDER,ROADSIDE..... UOC:EVR	1
7	MOOZZ	88900	22806-000-00	.DECK COVERING MAKE, AS REQUIRED..... UOC:EVR	1
8	XDFZZ	97403	13229E5743-1	.RAIL,MOUNTING..... UOC:EVR	2
9	PAFZZ	80204	B1821BH038C225N	.SCREW,CAP,HEXAGON H..... UOC:EVR	4
10	XDFZZ	97403	13229E5758	.BRACKET,RAIL MOUNTI..... UOC:EVR	2
11	XDOZZ	97403	13229E2308	.PLATE,RELOCATING ..... UOC:EVR	2

END OF FIGURE

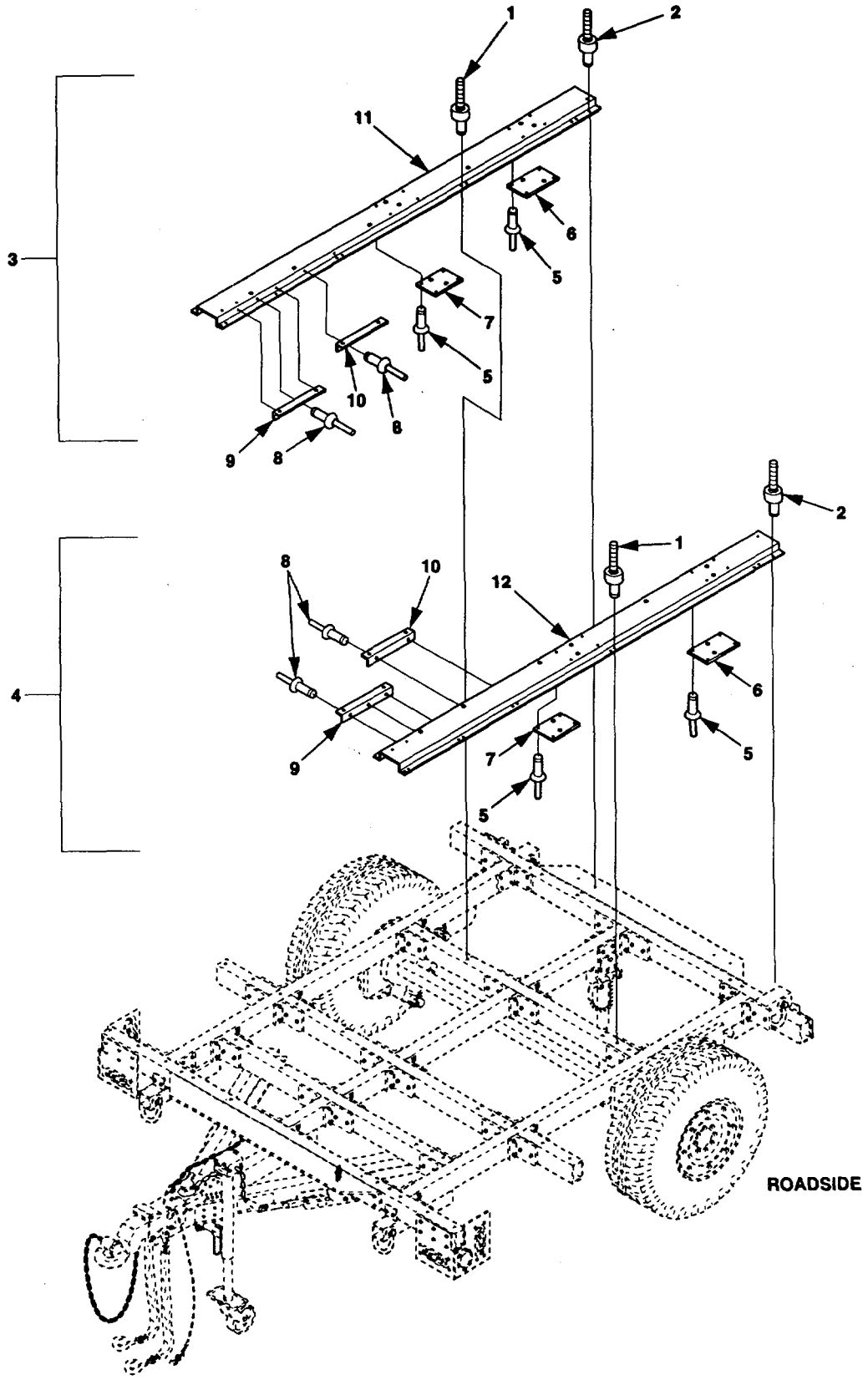

Figure F-29. High Mobility Trailer, Mounting Rails and Fenders, (AN/MJQ-35A and PU-797A). (Sheet 1 of 2)

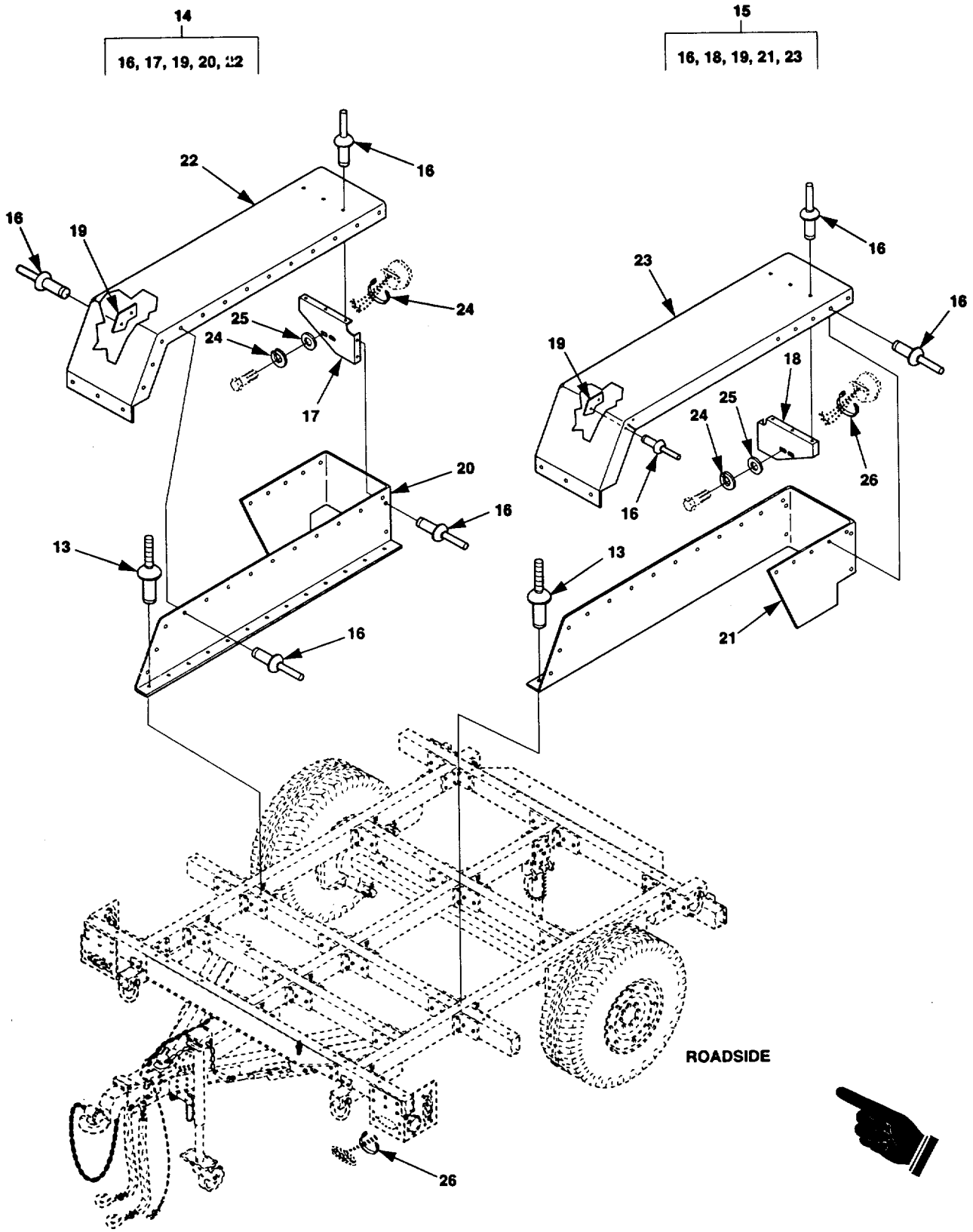

Figure F-29. High Mobility Trailer, Mounting Rails and Fenders, (AN/MJQ-35A and PU-797A). (Sheet 2. of 2)

SECTION II

(1) ITEM NO	(2) SMR CODE	(3) CAGEC	(4) PART NUMBER	(5) DESCRIPTION AND USABLE ON CODES (UOC)	(6) QTY
				GROUP 04 TRAILER ASSEMBLY	
				FIG. 29 HMT, MOUNTING RAILS AND FENDERS, AN/MJQ-35A,PU-797A	
1	PAFZZ	9K475	BOM-R8-8	.RIVET,BLIND UOC:FMF,FMK	40
2	PAFZZ	9K475	BOM-R8-10	.RIVET, BLIND UOC:FMF,FMK	4
3	XDFFF	30554	13230E6569-1	.RAIL ASSY,MTG,RH UOC: FMF,FMK	1
4	XDFFF	30554	13230E6569-2	.RAIL ASSY,MTG,LH UOC:FMF,FMK	1
5	PAFZZ	17446	MGL100-R6-9	..RIVET,BLIND UOC:FMF,FMK	16
6	XDFZZ	30554	13230E6527	..PLATE,DOUBLER,MTG R UOC:FMF,FMK	2
7	XDFZZ	30554	13230E6576	..PLATE,DOUBLER,MTG R UOC:FMF,FMK	2
8	PAFZZ	17446	MGLP-R8-10	..RIVET,BLIND UOC:FMF,FMK	10
9	XDFZZ	30554	13230E6577	..ANGLE,SUPPORT,MTG R UOC:FMF,FMK	2
10	XDFZZ	30554	13230E6526	..ANGLE,SUPPORT,MTG R UOC:FMF,FMK	2
11	XDFZZ	30554	13230E6578-1	..RAIL,MOUNTING GEN,R-H UOC:FMF,FMK	1
12	XDFZZ	30554	13230E6578-2	..RAIL,MOUNTING GEN,L-H UOC:FMF,FMK	1
13	PAFZZ	17446	MGLP-R8-6	.RIVET,STEEL SHANK UOC:FMF,FMK	38
14	XDFFF	30554	13230E6571-1	.FENDER,ASSEMBLY,RH UOC:FMF,FMK	1
15	XDFFF	30554	13230E6571-2	.FENDER,ASSEMBLY,LH UOC:FMF,FMK	1
16	PAFZZ	17446	MGLP-R8-6	..RIVET,STEEL SHANK UOC:FMF,FMK	58
17	XDFZZ	30554	13230E6582-1	..BRACKET,INSIDE FEND UOC:FMF,FMK	1
18	XDFZZ	30554	13230E6582-2	..BRACKET,INSIDE FEND UOC:FMF,FMK	1
19	XDFZZ	30554	13230E6579	..ANGLE,SUPPORT,FENDE UOC:FMF,FMK	2

SECTION II

(1) ITEM NO	(2) SMR CODE	(3) CAGEC	(4) PART NUMBER	(5) DESCRIPTION AND USABLE ON CODES (UOC)	(6) QTY
20	XDFZZ	30554	13230E6583-1	..FENDER,SIDE,TRAILER..... UOC:FMF,FMK	1
21	XDFZZ	30554	13230E6583-2	..FENDER,SIDE,TRAILER..... UOC:FMF,FMK	1
22	XDFZZ	30554	13230E6580-1	..FENDER,TOP,TRAILER..... UOC:FMF,FMK	1
23	XDFZZ	30554	13230E6580-2	..FENDER,TOP,TRAILER..... UOC:FMF,FMK	1
24	PAOZZ	96906	MS35338-141	.WASHER,LOCK..... UOC:FMF,FMK	4
25	PAOZZ	96906	MS15795-813	.WASHER,FLAT..... UOC:FMF,FMK	4
26	PAOZZ	96906	MS3367-1-0	.STRAP,TIEDOWN,ELECT ..... UOC:FMF,FMK	4

END OF FIGURE

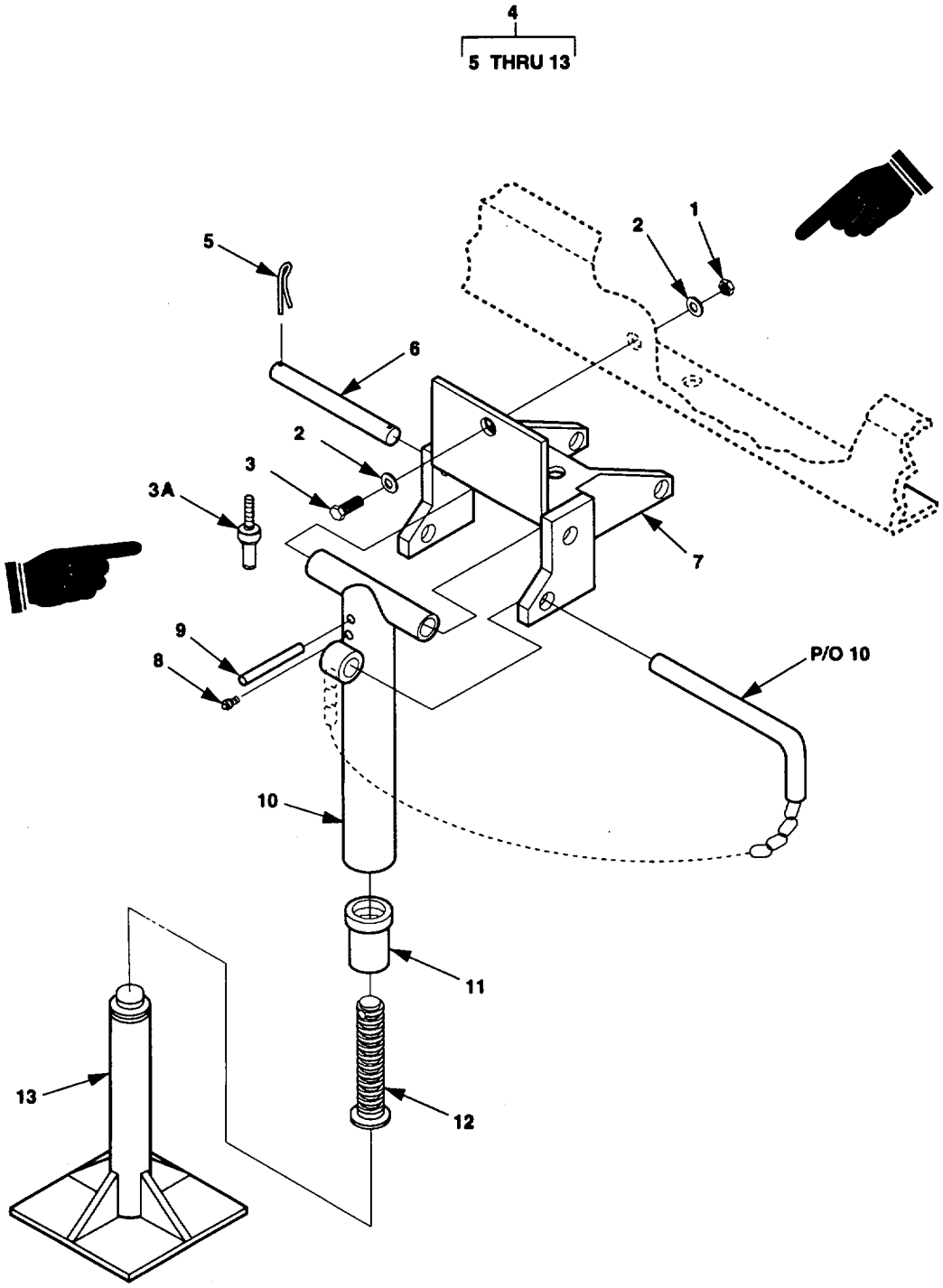

Figure F-30. Jack Leveling-Support Assembly.

SECTION II

(1) ITEM NO	(2) SMR CODE	(3) CAGEC	(4) PART NUMBER	(5) DESCRIPTION AND USABLE ON CODES (UOC)	(6) QTY
				GROUP 04 TRAILER ASSEMBLY	
				FIG. 30 JACK LEVELING-SUPPORT ASSEMBLY	
1	PAOZZ	96906	MS51922-17	.NUT,SELF-LOCKING,HE ..... UOC:EVP,EVQ,EVR	3
2	PAOZZ	96906	MS51412-7	.WASHER,FLAT..... UOC:ESP,EVQ	6
2	PAOZZ	96906	MS51412-27	.WASHER,FLAT..... UOC:EVR	6
3	PAOZZ	80208	B1821GH038C150N	SCREW,CAP,HEXAGON H..... UOC:EVQ,EVR	3
3	PAOZZ	80204	B1821BH038C125N	SCREW,CAP,HEXAGON H..... UOC:ESP	3
3A	PAFZZ	17446	BOM-R12-8	.RIVET BLIND ..... UOC:FMF,FMK	3
4	PAOOO	97403	13214E1206-1	.JACK,LEVELING-SUPPO..... UOC:EVP,EVQ,EVR	1
4	PAFFF	30554	13214E1206-2	.JACK,LEVELING-SUPPO..... UOC:FMF,FMK	1
5	PAOZZ	96906	MS24665-353	..PIN,COTTER	2
6	PBOZZ	97403	13214E1209	..PIN,STRAIGHT,HEADLE.....	1
7	XAOZZ	97403	13214E1207	..BRACKET	1
8	PAOZZ	96906	MS15006-1	..FITTING,LUBRICATION	1
9	PAOZZ	96906	MS16562-66	..PIN,SPRING.....	1
10	XAOZZ	97403	13214E1208-1	..CHAIN,PIN RETAINING	1
11	XAOZZ	97403	13214E1211	..NUT,SLEEVE.....	1
12	XAOZZ	97403	13214E1210	..SCREW.....	1
13	PBOZZ	97403	13214E1212-1	..SUPPORT BASE,LEG	1

END OF FIGURE

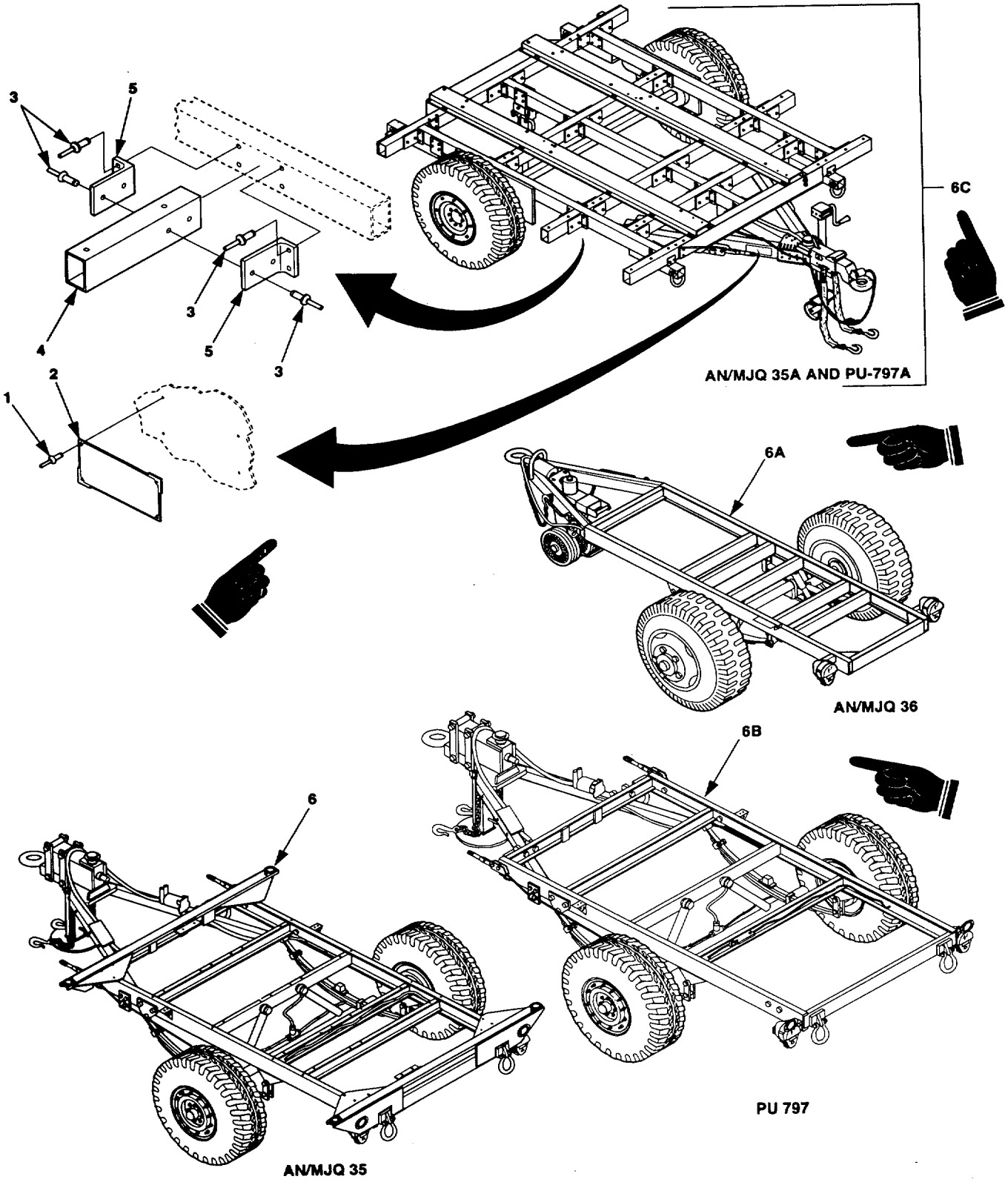

Figure F-31. Power Plant/Power Unit Trailer Chassis Assembly.

SECTION II

(1) ITEM NO	(2) SMR CODE	(3) CAGEC	(4) PART NUMBER	(5) DESCRIPTION AND USABLE ON CODES (UOC)	(6) QTY
				GROUP 04 TRAILER ASSEMBLY	
				FIG.31 POWER PLANT/POWER UNIT TRAILER CHASSIS ASSEMBLY	
1	PAOZZ	07707	AD45ABS	.RIVET,BLIND ..... UOC:FMF,FMK	4
2	MDOZZ	30554	13230E6572	.PLATE,IDENTIFICATION CHASSIS VARIANT ..... UOC:FMF,FMK	1
3	PAFZZ	17446	BOM-R8-8	.RIVET,BLIND ..... UOC:FMF,FMK	16
4	XDFZZ	30554	13230E6514	.STRUCTURAL SECTION ..... UOC:FMF,FMK	2
5	XDFZZ	30554	13230E6524	.CLIP,FRAME,CORNER ..... UOC:FMF,FMK	4
6	XAFFF	97403	13229E5664	.CHASSIS ASSEMBLY ..... UOC:EVQ	1
6A	XAFFF	97403	13229E5824	.CHASSIS ASSEMBLY ..... UOC:ESP	1
6B	XAFZZ	97403	13229E5746-1	.CHASSIS ASSEMBLY ..... UOC:EVR	1
6C	XAFFF	19207	12450001	.CHASSIS,TRAILER-HMT ..... UOC:FMF,FMK	1

END OF FIGURE

SECTION II

(1) ITEM NO	(2) SMR CODE	(3) CAGEC	(4) PART NUMBER	(5) DESCRIPTION AND USABLE ON CODES (UOC)	(6) QTY
				GROUP 05 BULK MATERIAL	
				FIG. BULK	
1	PAFZZ	81349	CO-04HDE(4/4-4/12R)1290	CABLE,POWER UOC:ESP,EVQ,FMF	V
2	PAOZZ	88900	22806-000-00	DECK COVERING,LIGHT UOC:ESP,EVR,EVQ	V
3	PAOZZ	96906	MS35822-9A	HINGE,BUTT UOC:ESP,EVQ,FMF	V
4	PAOZZ	96906	MS35823-6D	HINGE,BUTT	V
5	PAOZZ	81349	M6000E00200	HOSE,NONMETALLIC	V
6	PAFZZ	813349	M23053/5-111-0	INSULATION SLEEVING UOC:ESP,EVQ,FMF	V
7	PAFZZ	81349	M23053/5-107-9	INSULATION SLEEVING UOC:ESP,EVQ,FMF	V
8	PAFZZ	81349	M23053/5-104-0	INSULATION SLEEVING UOC:ESP,EVQ,FMF	V
9	PAFZZ	81349	M23053/5-108-0	INSULATION SLEEVING UOC:ESP,EVQ,FMF	V
10	PAFZZ	81349	M23053/5-105-9	INSULATION SLEEVING UOC:ESP,EVQ,FMF	V
11	PAFZZ	81349	M23053/5-105-4	INSULATION SLEEVING UOC:ESP,EVQ,FMF	V
12	PAFZZ	81349	M23053/5-107-4	INSULATION SLEEVING UOC:ESP,EVQ,FMF	V
13	PAOZZ	81349	M23053/5-104-9	INSULATION SLEEVING UOC:ESP,EVQ,FMF	V
14	PAFZZ	81349	M23053/5-108-4	INSULATION SLEEVING UOC:ESP,EVQ,FMF	V
15	PAFZZ	81349	M23053/5-105-0	INSULATION SLEEVING UOC:ESP,EVQ,FMF	V
16	PAOZZ	81349	M24768/2-S-7	SHEET,PLASTIC UOC:ESP,EVQ,FMF	V
17	PAOZZ	81346	2B2B2C1F2	STRIP,RUBBER UOC:ESP,EVQ,FMF	V
18	PAFZZ	81348	QQB575F30T0437	WIRE,BRAID UOC:ESP,EVQ,FMF	V
19	PAFZZ	81349	M22759/16-20-9	WIRE,ELECTRICAL UOC:ESP,EVQ,FMF	V
20	PAFZZ	81349	M5086/2-4-9	WIRE,ELECTRICAL UOC:ESP,EVQ,FMF	V
21	PAFZZ	81349	M5086/2-6-9	WIRE,ELECTRICAL UOC:ESP,EVQ,FMF	V
22	PAFZZ	81349	M22759/16-16-9	WIRE,ELECTRICAL UOC:ESP,EVQ,FMF	V
23	PAOZZ	81348	QQW343C06B1B	WIRE,ELECTRICAL	V
24	PAOZZ	81349	M5086/2-18-9	WIRE,ELECTRICAL UOC:ESP,EVQ,FMF	V

END OF FIGURE

Section III

Special Tools List
(Not Applicable)

SECTION IV

CROSS- REFERENCE-INDEXES
NATIONAL STOCK NUMBER INDEX

STOCK NUMBER	FIG.	ITEM
5999-00-014-0952	14	9
5940-00-021-3321	21	19
	22	19
5306-00-021-3912	5	3
	0	3
5306-00-021-4065	20	3
5310-00-022-8847	21	11
	2	11
5310-00-042-4229	12	2
5310-00-044-6477	20	2
	20	2
	20	2
5310-00-052-1972	21	14
	22	14
	31	1
5970-00-052-3297	BULK	12
	6	21
	5	8
5970-00-052-4877	BULK	11
	6	22
5305-00-054-5650	17	3
5305-00-054-5652	6	8
5305-00-054-6651	6	12
5305-00-054-6655	18	2
5305-00-054-6671	6	1
	7	1
	11	7
	18	11
5305-00-059-3660	18	8
5305-00-059-3663	14	4
	16	4
5340-00-066-1235	19	1
5305-00-068-0508	24	8
5305-00-068-0510	23	3
	24	4A
5305-00-068-0511	27	3
	30	3
5305-00-071-2068	2	3
5305-00-071-2070	1	3
5305-00-071-2505	24	8
5975-00-074-2072	14	15
5970-00-082-3942	BULK	10
		7
		15
5310-00-087-4652	5	1
	23	1
	24	2
	24	2A
	25	1
	26	1
	27	1
	28	1
5310-00-087-4652	30	1
5310-00-088-1251	24	6
5970-00-088-2975	BULK	13
	9	3
5940-00-113-8190	19	22
	21	9
	22	9
5940-00-114-1310	18	9
5935-00-114-8061	14	6
5940-00-115-2676	4	4
5940-00-115-2676	4	12
	14	12
5940-00-115-4996	4	3
	4	11
	13	2
	13	17
	13	12
	13	17
	13	21
	13	26
	14	11
5310-00-138-4315	12	6
5320-00-140-1479	29	2
5940-00-143-4780	15	5
5940-00-143-4793	15	2
4730-00-172-0049	30	8
5310-00-184-8971	21	6
	22	6
4710-00-185-6948	19	3
5999-00-186-3912	19	19
5310-00-187-2413	21	7
	22	7
9905-00-202-3639	24	10
4210-00-202-7858	21	1
	21	1A
	22	1
9905-00-205-2795	24	9
5310-00-209-1239	19	9
4210-00-223-4857	24	5
	24	5A
5310-00-225-5328	6	3
	7	2
	11	6
	18	12
5310-00-225-6993	1	1
	2	1
5306-00-226-4825	20	3
5306-00-226-4827	20	3
5307-00-227-1741	21	12
	22	12
5340-00-234-8422	20	8
5310-00-245-3612	24	2B

SECTION IV

CROSS- REFERENCE-INDEXES
NATIONAL STOCK NUMBER INDEX

STOCK NUMBER	FIG.	ITEM
5310-00-252-8748	5	1
	20	1
4210-00-270-4512	21	1
	22	1
5940-00-271-9504	19	20
4730-00-277-5115	19	6
5940-00-283-5280	15	3
5330-00-402-5125	19	5
5305-00-432-4172	24	11
5945-00-435-1833	6	10
5320-00-483-0558	29	1
	31	3
5305-00-543-4372	24	4B
5940-00-557-4338	4	2
	4	10
	13	3
	13	8
	13	13
6145-00-578-6594	BULK	21
	14	17
6145-00-578-6595	BULK	20
	13	5
	13	10
	13	15
	13	23
	13	27
6145-00-578-6602	BULK	24
	9	4
5320-00-582-3305	11	1
5310-00-582-5677	21	18
	22	18
5310-00-584-7995	21	8
	22	8
4710-00-597-8731	19	2
5310-00-614-3506	1	2A
	2	2A
5310-00-625-5756	5	2
	20	2
5305-00-638-8920	28	9
5940-00-660-3633	15	4
5305-00-680-4262	24	4C
5305-00-725-2317	5	3
	25	3
	26	3
	28	3
	30	3
5975-00-727-5153	6	24
	15	6
5305-00-727-6804	1	3A
	2	3A
	16	1
	18	5

STOCK NUMBER	FIG.	ITEM
5970-00-740-2971	BULK	7
	4	6
	4	14
	8	4
6210-00-753-2289	8	1
5320-00-753-3830	20	5
5310-00-763-8901	26	12
	27	11
5310-00-768-0321	1	1A
	2	1A
5975-00-794-2523	19	17
5310-00-802-4701	24	3B
	29	25
5970-00-812-1356	BULK	6
	4	5
	4	13
5970-00-812-2967	BULK	9
5970-00-812-2969	BULK	8
	6	25
5940-00-813-0698	6	20
	9	2
5315-00-838-4584	30	9
5315-00-839-5822	30	5
5305-00-841-2681	19	7
5975-00-878-3791	19	15
5310-00-883-9417	21	17
	22	17
6210-00-900-9423	8	6
5310-00-900-9423	9	5
5320-00-904-4136	21	14
	22	14
4730-00-908-3194	21	2
	22	2
5975-00-924-9927	19	18
5310-00-929-6395	6	13
5310-00-933-8118	6	6
	17	2
5310-00-933-8119	6	2
	7	3
	11	5
	18	13
5310-00-933-8120	14	2
	16	2
	18	6
5310-00-934-9748	6	5
	17	1
5310-00-934-9751	3	1
5310-00-934-9759	11	4
5310-00-934-9761	18	1
5310-00-934-9765	14	1

SECTION IV

CROSS- REFERENCE-INDEXES
NATIONAL STOCK NUMBER INDEX

STOCK NUMBER	FIG.	ITEM	STOCK NUMBER	FIG.	ITEM
5970-00-954-1622	BULK	15			
	17	6			
5310-00-974-6623	5	1A			
	20	1B			
5340-00-975-2126	11	2			
	20	6			
5940-00-983-6046	18	3			
5310-00-984-3806	20	1			
	20	1			
5975-00-984-6582	29	26			
5310-00-984-7042	24	2C			
	29	24			
5310-00-989-0908	21	16			
	22	16			
5310-00-989-5945	12	1			
5305-00-993-1851	3	2			
5310-01-012-7400	12	4			
5120-01-013-1676	19	13			
5120-01-019-9564	19	23			
6145-01-042-4621	BULK	19			
	8	5			
5935-01-042-7579	6	11			
6145-01-044-8799	BULK	22			
	15	7			
5340-01-053-7127	BULK	3			
5310-01-078-5996	21	5			
	22	5			
5999-01-091-3187	14	8			
5310-01-141-6672	6	7			
	17	4			
5315-01-162-0143	30	6			
2590-01-167-8596	30	13			
5310-01-180-7157	11	B			
	2	1B			
5310-01-216-7390	1	4			
6210-01-230-1851	8	9			
	9	8			
5340-01-242-4554	3	4			
5310-01-257-7590	5	2			
	23	2			
	24	3			
	25	2			
	26	2			
	27	2			
	30	2			
5310-01-266-4641	1	2			
	2	2			
3115-01-274-7387	1	6			
	2	4			
5310-01-303-4701	6	14			

SECTION IV

CROSS-REFERENCE INDEXES
PART NUMBER INDEX

CAGEC	PART NUMBER	STOCK NUMBER	FIG.	ITEM
58536	A-A-1106	4210-00-202-7858	21	1
			21	1A
			22	1
07707	AD45ABS	5320-00-052-1972	21	14
			22	14A
88044	AN816-5-4	4730-00-277-5115	19	6
88044	AN960-C4	5310-01-141-6672	6	7
			17	4
88044	AN961-616T	5310-00-181-2413	21	7
			22	7
17446	BOM-R12-8		30	3A
9K475	BOM-R8-10	5320-01-140-1470	29	2
9k475	BOM-R8-8	5320-00-483-0558	29	1
			31	3
80204	B1821BH025C075N	5305-00-068-0508	24	8A
80204	B1821BH025C088N	5305-00-071-2505	24	8
80204	B1821BH025C075N	5306-00-226-4825	20	3
80204	B1821BH031C100N	5306-00-226-4827	20	3
80204	B1821BH038C075N	5305-00-543-4372	24	4B
80204	B1821BH038C100N	5305-00-068-0510	23	3
			24	4A
80204	B1821BH038C125N	5305-00-068-0511	27	3
			30	3
80204	B1821BH038C150N	5305-00-725-2317	5	3
			25	3
			26	2
			28	3
			30	3
80204	B1821BHO38C225N	5305-00-638-8920	28	9
80204	B1821 BH038C600N		27	6
80204	B1821BH050C138N	5305-00-071-2068	2	3
80204	B1821BH050C175N	5305-00-071-2070	1	3
01667	CBA-70	5940-00-271-9504	19	20
81349	CO-04HDE(4/4-4/1			
	2R1290		BULK	1
			4	8
			4	8
			4	8
			4	16
			4	16A
			4	16B
15277	FS0216B122-1	5975-00-878-3791	19	15
80244	GGG-H-86,TY10CL1		19	14
73616	GRB58	5975-00-924-9927	19	18
OBKK8	GRC 58		19	17
58224	G9B		8	8
			9	7
56681	HLP1053A		19	16
81349	JANTX1 N5619		6	17
7E656	JCG-6026		16	5
81349	LC21CN3		8	2
81349	LH80/1	6210-00-753-2289	8	1

SECTION IV

CROSS-REFERENCE INDEXES
PART NUMBER INDEX

CAGEC	PART NUMBER	STOCK NUMBER	FIG.	ITEM
30554	MEP 802A	6115-01-274-7387	1	6
17446	MGLP-R8-10		23	5
			29	8
17446	MGLP-R8-6		29	13
			29	16
17446	MGL100-R6-9		29	5
81349	MSA37TB18		6	27
81349	MSA37TB5		18	4
96906	MS15006-1	4730-00-172-0049	30	8
96906	MS15567-2	6240-01-355-4422	8	3
96906	MS15795-810	5310-00-582-5677	21	18
			22	18
96906	MS15795-812	5310-00-625-5756	5	2
			20	2
96906	MS15795-813	5310-00-802-4701	24	3B
			29	25
96906	MS 15795-817	5310-00-614-3506	1	2A
			2	2A
96906	MS 15795-841	5310-00-225-5328	6	3
			7	2
			11	6
			18	12
96906	MS 15795-848		14	3
			16	3
			18	7
96906	MS 16203-27	5310-00-584-7995	21	8
			22	8
96906	MS16562-66	5315-00-838-4584	30	9
96906	MS18015-1	5340-00-975-2126	11	2
			20	6
96906	MS18212-65		12	5
96906	MS20427-4C6		20	7
96906	MS20600AD3W3		11	10
96906	MS20600AD4W3	5320-00-582-3305	11	1
96906	MS20613-4P5	5320-00-753-3830	20	5
96906	MS20659-143	5940-00-115-2676	4	4
			4	12
			14	12
96906	MS20659-145	5940-00-115-4996	4	3
			4	11
			13	2
			13	7
			13	12
			13	17
			13	21
			13	26
			14	11
96906	MS21919WCG21	5340-01-242-4554	3	4
96906	MS24519-7		21	4
			22	4
96906	MS24524-30		10	3
96906	MS24665-353	5315-00-839-5822	30	5

CROSS-REFERENCE INDEXES
PART NUMBER INDEX

CAGEC	PART NUMBER	STOCK NUMBER	FIG.	ITEM
96906	MS25036-101	5940-00-813-0698	6	20
			9	2
96906	MS25036-106	5940-00-283-5280	15	3
96906	MS25036-108	5940-00-143-4780	15	5
96906	MS25036-110	5940-00-143-4793	15	2
96906	MS25036-119	5940-00-114-1310	18	9
96906	MS25036-122	5940-00-113-8190	19	22
			21	9
			22	9
96906	MS25036-125	5940-00-557-4338	4	2
			4	10
			13	3
			13	8
			13	13
96906	MS25036-1 55	5940-00-660-3633	15	4
96906	MS27130-CR68		26	8
			26	11
			27	8
			27	10
96906	MS27130-CR93		18	17
96906	MS27407-3		10	2
96906	MS27969-4	5340-00-234-8422	20	8
96906	MS3367-1-0	5975-00-984-6582	29	26
96906	MS3367-1-9	5975-00-074-2072	14	15
96906	MS3367-4-9	5975-00-727-5153	6	24
			15	6
96906	MS35207-267	5305-00-993-1851	3	2
96906	MS35307-414	5305-00-727-6804	1	3A
			2	3A
96906	MS35308-334	5306-00-021-3912	5	3
			20	3
96906	MS35308-338	5306-00-021-4065	20	3
96906	MS35308-360	5305-00-680-4262	24	4C
96906	MS35333-110	5310-00-022-8847	21	11
			22	11
96906	MS35333-113	5310-00-042-4229	12	2
96906	MS35335-60	5310-00-209-1239	19	9
96906	MS35338-103	5310-00-184-8971	21	6
			22	6
96906	MS35338-135	5310-00-933-8118	6	6
			17	2
96906	MS35338-136	5310-00-929-6395	6	13
96906	MS35338-137	5310-00-933-8119	6	2
			7	3
			11	5
			18	13
96906	MS35338-	-00-933-8120	14	2
			16	2
			18	6
96906	MS35338-140	5310-00-974-6623	5	1A
			20	1

CROSS-REFERENCE INDEXES
PART NUMBER INDEX

CAGEC	PART NUMBER	STOCK NUMBER	FIG.	ITEM
96906	MS35338-141	5310-00-984-7042	24	2C
			29	24
96906	MS35338-143	5310-01-180-7157	1	1B
			2	1B
96906	M5335338-158	5310-00-883-9417	21	17
			22	17
96906	MS353S7-1	9905-00-205-2795	24	9
96906	MS35387-2	9905-00-202-3639	24	10
96906	MS35425-75	5310-01-078-5996	21	5
			22	5
96906	M535649-244	5310-00-934-9748	6	5
			17	1
96906	MS35649-264	5310-00-934-9761	18	1
96906	MS35649-284	5310-00-934-9759	11	4
96906	MS35650-302	5310-00-934-9751	3	1
96906	MS35650-304	5310-00-934-9765	14	1
			16	1
			18	5
96906	MS35650-	5310-00-252-8748	5	1
			20	1
96906	MS35650-3384	5310-00-245-3612	24	2B
96906	MS35691-3	5310-00-989-0908	21	16
			22	16
96906	M535691 -35	5310-00-989-5945	12	1
96906	MS35822-9A	5340-01-054-4934	BULK	3
96906	PM535823-6D	5340-01-053-7127	BULK	4
96906	MS35842-11	4730-00-908-3194	21	2
			22	2
			12	3
96906	MS39347-2	5940-00-021-3321	21	19
			22	19
96906	MS39347-4		12	3
96906	MS51412-1	5310-01-303-4701	6	14
96906	MS51412-13			
96906	MS51412-13		27	13
96906	MS51412-13A		26	13
96906	MS51412-2		3	3
96906	MS51412-23		24	7
96906	MS51412-25	5310-00-044-6477	20	2
			20	2
			20	2
96906	MS51412-27		24	3A
			28	2A
			30	2
96906	MS51412-4		24	7A
			24	7B
96906	MS51412-7	5310-01-257-7590	5	2
			23	2
			24	3
			25	2
			26	3
			27	2
			30	2

CROSS-REFERENCE INDEXES
PART NUMBER INDEX

CAGEC	PART NUMBER	STOCK NUMBER	FIG.	ITEM
96906	MS51412-9	5310-01-266-4641	1	2
			2	2
96906	MS51415-11		27	12
96906	MS51415-9	5310-01-216-7390	1	4
96906	MS51858-5	5310-01-012-7400	12	4
96906	MS51859-5	5310-00-138-4315	12	6
96906	MS51861-37	5305-00-432-4172	24	11
96906	MS51922-1	5310-00-088-1251	24	6
			24	6A
96906	MS51922-17	5310-00-087-4652	5	1
			23	1
			24	2
			24	2A
			25	1
			26	1
			27	1
			28	1
			30	1
96906	MS51922-33	5310-00-225-6993	1	1
			2	1
96906	MS51922-9	5310-00-984-3806	20	1
			20	1
96906	MS51957-16	5305-00-054-5650	17	3
96906	MS51957-18	5305-00-054-5652	6	8
96906	MS51957-27	5305-00-054-6651	6	12
96906	MS51957-31	5305-00-054-6655	18	2
96906	MS51957-46	5305-00-054-6671	6	1
			7	1
			11	7
			18	11
96906	MS51958-64	5305-00-059-3660	18	8
96906	MS51958-67	5305-00-059-3663	14	4
			16	4
96906	MS51968-23	5310-00-763-8901	26	12
			27	11
96906	MS51971-5	5310-00-768-0321	1	1A
			2	1A
96906	MS90555C32413S		14	7
96906	MS90563-3C	5935-00-114-8061	14	6
81349	M22759/16-16-9	6145-01-044-8799	BULK	22
			15	7
81349	M22759/16-20-9	6145-01-042-4621	BULK	19
			6	23
			8	5
81349	M23053/5-104-0	5970-00-812-2969	BULK	8
			6	25
81349	M23053/5-104-9	5970-00-088-2975	BULK	13
			9	3
81349	M23053/5-105-0	5970-00-954-1622	BULK	15
			17	6

CROSS-REFERENCE INDEXES
PART NUMBER INDEX

CAGEC	PART NUMBER	STOCK NUMBER	FIG.	ITEM
81349	M23053/5-105-4	5970-00-052-4877	BULK	11
			6	22
			15	9
81349	M23053/5-105-9	5970-00-082-3942	BULK	10
			4	7
			4	15
81349	M23053/5-107-	970-00-052-3297	BULK	12
			6	2
			15	8
81349	M23053/5-107-9	5970-00-740-2971	BULK	7
			4	6
			4	14
			8	4
81349	M23053/5-108-0	5970-00-812-2967	BULK	9
			14	13
81349	M23053/5-108-4		BULK	14
			13	4
			13	9
			13	14
			13	18
			13	22
			13	26
			14	14
81349	M23053/5-111-0	5970-00-812-1356	BULK	6
			4	5
			4	13
81349	M24243/1-B403	5320-00-904-4136	21	14
			22	14
81349	M24768/2-S-7		BULK	16
			11	11
			11	12
			11	13
97403	M3BE510		3	7
81349	M39006/22-0631		6	18
81349	M39029/49-329	5999-00-014-0952	14	9
81349	M39029/49-331	5999-01-091-3187	14	8
81349	M45938/1-13C		6	29
81349	M5086/2-18-9	6145-00-578-6602	BULK	24
			9	4
81349	M5086/2-4-9	6145-00-578-6595	BULK	20
			13	5
			13	10
			13	15
			13	19
			13	23
			13	27
			14	16
81349	M5086/2-6-9	6145-00-578-6594	BULK	21
			14	17
81349	M55155/1 99G03		6	15
81349	M5757/23-003	5945-00-435-1833	6	10

CROSS-REFERENCE INDEXES
PART NUMBER INDEX

CAGEC	PART NUMBER	STOCK NUMBER	FIG.	ITEM
8134	M6000E00200		BULK	5
			21	3
			22	3
81348	QQB575F30T0437		BULK	18
			18	10
81348	QQW343C06B1 B		BULK	23
			19	21
			21	10
			22	10
81349	RER75F2490P		6	9
81349	RER75F2491P		17	5
81349	TBJA		10	1
59501	10-33675-36		14	10
60177	11500		7	4
19207	12450001		31	6C
97403	13200E6361		19	11
97403	13200E6363		19	8
97403	13205E4918		21	13
			22	13
97403	13211E7541	5340-00-066-1235	19	1
97403	13211E7542	4710-00-597-8731	19	2
97403	13211E7543	4710-00-185-6948	19	3
97403	13211E7544		19	4
97403	13211E7546	5330-00-402-5125	19	5
97403	13211E7547		19	10
97403	13211E7548		19	12
97403	13214E1206-1		30	4
30554	13214E1206-2		30	4A
97403	13214E1207		30	7
97403	13214E1208-1		30	10
97403	13214E1209	5315-01-162-0143	30	6
97403	13214E1210		30	12
97403	13214E1211		30	11
97403	13214E1212-1	2590-01-167-8596	30	13
97403	13214E1212-2		30	4
97403	13214E1223	5307-00-227-1741	21	12
			22	12
97403	13214E1235	4210-00-2234857	24	5
			24	5A
97403	13214E1391	6210-00-900-9423	8	6
			9	5
97403	13218E5149-8		3	5
97403	13222E9686	5935-01-042-7579	6	11
97403	13226E7741	5120-01-013-1676	19	13
97403	13229E2308		26	16
			28	11
97403	13229E5649-1		11	8
19099	13229E5650-TLR		24	1
97403	13229E5654-1		11	14
97403	13229E5654-2		11	15
97403	13229E5664		31	6

CROSS-REFERENCE INDEXES
PART NUMBER INDEX

CAGEC	PART NUMBER	STOCK NUMBER	FIG.	ITEM
97403	13229E5666-1		21	15
97403	13229E5666-13		22	15
97403	13229E5666-2		21	15
97403	13229E5677		27	7
97403	13229E5728-1		11	9
97403	13229E5743-1		28	8
97403	13229E5746-1		31	6B
97403	13229E5748		27	9
97403	13229E5749-1		24	1B
97403	13229E5758		28	10
97403	13229E5764-2		9	1
97403	13229E5803		25	5
97403	13229E5812		25	4
97403	13229E5817		27	4
19099	1 3229E5817-6		27	5
97403	13229E5818		27	15
97403	13229E5819-3		11	3
97403	513229E5820-3		5	4
97403	13229E5821		18	15
97403	1322E5822		18	14
97403	13229E5823		6	28
97403	13229E5824		31	6A
97403	13229E5825		24	1A
97403	13229E5827		3	6
97403	13229E5828-1		13	1
97403	13229E5828-2		13	6
97403	13229E5828-3		13	11
97403	13229E5828-4		13	16
97403	1 3229E5828-5		13	20
97403	13229E5828-6		13	24
97403	13229E5829		6	19
97403	13229E5830		6	4
97403	13229E5831		15	1
97403	1 3229E5832-1		14	5
97403	13229E5833		12	7
97403	13229E5836-1		4	1
97403	13229E5836-2		4	9
97403	13229E5836-3		4	1A
97403	13229E5836-4		4	9A
97403	13229E5836-5		4	1B
97403	13229E5836-6		4	9B
97403	13229E7946		20	4
97403	13229E9619-1		28	4
97403	13229E9620-1		28	6
97403	13229E9621-1		23	4
97403	13229E9622		26	4
19099	13229E9622-3		26	5
97403	13229E9623		26	7
97403	13229E9624		26	10
97403	13229E9625		26	6
97403	13229E9626		26	9

CROSS-REFERENCE INDEXES
PART NUMBER INDEX

CAGEC	PART NUMBER	STOCK NUMBER	FIG.	ITEM
97403	13229E9627		26	15
97403	13229E9628		26	17
97403	13229E9629-3		26	14
97403	13229E9629-4		27	14
97403	13229E9630		11	16
97403	13229E9631		12	8
97403	13229E9635		1	5
30554	13230E6514		31	4
30554	13230E6521		22	15A
30554	13230E6524		31	5
30554	13230E6526		29	10
30554	13230E6527		29	6
30554	13230E6561		21	15
30554	13230E6564-1		23	8
30554	13230E6564-2		23	10
30554	13230E6565		24	1C
30554	13230E6567-1		23	7
30554	13230E6567-2		23	9
30554	13230E6569-1		29	3
30554	13230E6569-2		29	4
30554	13230E6571-1		29	14
30554	13230E6571-2		29	15
30554	13230E6572		31	2
30554	13230E6576		29	7
30554	13230E6577		29	9
30554	13230E6578-1		29	11
30554	13230E6578-2		29	12
30554	13230E6579		29	19
30554	13230E6580-1		29	22
30554	13230E6580-2		29	23
30554	13230E6582-1		29	17
30554	13230E6582-2		29	18
30554	13230E6583-1		29	20
30554	13230E6583-2		29	21
72619	181-0931-001		8	7
			9	6
72619	181-8836-09-553	6210-01-230-1851	8	9
			9	8
81346	2B2B2C1F2		BULK	17
			18	16
88900	22806-000-00		BULK	2
			28	5
			28	7
81349	37TB18B		6	26
81349	37TB5	5940-00-983-6046	18	3
00141	4328	5305-00-841-2681	19	7
60705	565C10GAP10		6	16
04655	70-801074	5999-00-186-3912	19	19
30554	72-2029-1	5120-01-019-9564	19	23

SECTION IV

CROSS-REFERENCE INDEXES
FIGURE AND ITEM NUMBER INDEX

FIG.	ITEM	STOCK NUMBER	CAGEC	PART NUMBER
BULK	1		81349	CO-04HDE(4/4-4/12R)1290
BULK	2		88900	22806-000-00
BULK	3	5340-01-054-4934	96906	MS35822-9A
BULK	4		96906	MS35823-6D
BULK	5		81349	M6000E00200
BULK	6	5970-00-812-1356	81349	M23053/5-111-0
BULK	7	5970-00-740-2971	81349	M23053/5-107-9
BULK	8	5970-00-812-2969	81349	M23053/5-104-0
BULK	9	5970-00-812-2967	81349	M23053/5-108-0
BULK	10	5970-00-082-3942	81349	M23053/5-105-9
BULK	11	5970-00-052-4877	81349	M23053/5-105-4
BULK	12	5970-00-052-3297	81349	M23053/5-107-4
BULK	13	5970-00-088-2975	81349	M23053/5-104-9
BULK	14		81349	M23053/5-108-4
BULK	15	5970-00-954-1622	81349	M23053/5-105-0
BULK	16		81349	M24768/2-S-7
BULK	17		81346	2B2B2C1F2
BULK	18		81348	QQB575F30T0437
BULK	19	6145-01-042-4621	81349	M22759/16-20-9
BULK	20	6145-00-578-6595	81349	M5086/2-4-9
BULK	21	6145-00-578-6594	81349	M5086/2-6-9
BULK	22	6145-01-044-8799	81349	M22759/16-16-9
BULK	23		81348	QQW343CO6B1 B
BULK	24	6145-00-578-6602	81349	M5086/2-18-9
1	1	5310-00-225-6993	96906	MS51922-33
1	1A	5310-00-768-0321	96906	MS51971-5
1	1B	5310-01-180-7157	96906	MS35338-143
1	2	5310-01-266-4641	96906	MS51412-9
1	2A	5310-00-614-3506	96906	MS 15795-817
1	3	5305-00-071-2070	80204	B1821BH050C175N
1	3A	5305-00-727-6804	96906	MS35307-414
1	4	5310-01-216-7390	96906	MS51415-9
1	5		97403	13229E9635
1	6	6115-01-274-7387	30554	MEP 802A
2	1	5310-00-225-6993	96906	MS51922-33
2	1A	5310-00-768-0321	96906	MS51971-5
2	1B	5310-01-180-7157	96906	MS35338-143
2	2	5310-01-266-4641	96906	MS51412-9
2	2A	5310-00-614-3506	96906	MS15795-817
2	3	5305-00-071-2068	96906	B1821BH050C138N
2	3A	5305-00-727-6804	96906	MS35307-414
2	4	6115-01-274-7387	30554	MEP 802A
3	1	5310-00-934-9751	96906	MS35650-302
3	2	5305-00-993-1851	96906	MS35207-267
3	3		96906	MS51412-2
3	4	5340-01-242-4554	96906	MS21919WCG21
3	5		97403	13218E5149-8
3	6		97403	13229E5827
3	7		97403	M3BE510
4	1		97403	13229E5836-1
4	1A		97403	13229E5836-3
4	1B		97403	13229E5836-5

CROSS-REFERENCE INDEXES
FIGURE AND ITEM NUMBER INDEX

FIG.	ITEM	STOCK NUMBER	CAGEC	PART NUMBER
4	2	5940-00-557-4338	96906	MS25036-125
4	3	5940-00-115-4996	96906	MS20659-145
4	4	5940-00-115-2676	96906	MS20659-143
4	5	5970-00-812-1356	81349	M23053/5-111-0
4	6	5970-00-740-2971	81349	M23053/5-107-9
4	7	5970-00-082-3942	81349	M23053/5-105-9
4	8		81349	CO-04HDE(414-4/12R)1290
4	8		81349	CO-04HDE(4/4-4/12R) 1290
4	8		81349	CO-04HDE(4/4-4/12R) 1290
4	9		97403	13229E5836-2
4	9A		97403	13229E5836-4
4	9B		97403	13229E5836-6
4	10	5940-00-557-4338	96906	MS25036-125
4	11	5940-00-115-4996	96906	MS20659-145
4	12	5940-00-115-2676	96906	MS20659-143
4	13	5940-00-812-1356	81349	M23053/5-111-0
4	14	5970-00-740-2971	81349	M23053/5-107-9
4	15	5970-00-082-3942	81349	M23053/5-105-9
4	16		81349	CO-04HDE(4/4-4/12R) 1290
4	16A		81349	CO-04HDE(4/4-4/12R) 1290
4	16B		81349	CO-04HD E(4/44/12R)1290
5	1	5310-00-087-4652	96906	MS51922-17
5	1	5310-00-252-8748	96906	MS35650-3314
5	1A	5310-00-974-6623	96906	MS35338-140
5	2	5310-01-257-7590	96906	MS51412-7
5	2	5310-00-625-5756	96906	MS15795-812
5	3	5305-00-725-2317	96906	B1821BH038C150N
5	3	5306-00-021-3912	96906	MS35308-334
5	4		97403	13229E5820-3
6	1	5305-00-054-6671	96906	MS51957-46
6	2	5310-00-933-8119	96906	MS35338-137
6	3	5310-00225-5328	96906	MS15795-841
6	4		97403	13229E5830
6	5	5310-00-934-9748	96906	MS35649-244
6	6	5310-00-933-8118	96906	MS35338-135
6	7	5310-01-141-6672	88044	AN960-C4
6	8	5305-00-054-5652	96906	MS51957-18
6	9		81349	RER75F2490P
6	10	5945-00-435-1833	81349	M5757/23-003
6	11	5935-01-042-7579	97403	13222E9686
6	12	5305-00-054-6651	96906	MS51957-27
6	13	5310-00-929-6395	96906	MS35338-136
6	14	5310-01-303-4701	96906	MS51412-1
6	15		81349	M55155/199G03
6	16		60705	565C10GAP10
6	17		81349	JANTX1 N5619
6	18		81349	M39006/22-0631
6	19		97403	13229E5829
6	20	5940-00-813-0698	96906	MS25036-101
6	21	5970-00-052-3297	81349	M23053/5-107-4
6	22	5970-00-052-4877	81349	M23053/5-105-4
6	23	6145-01-042-4621	81349	M22759/16-20-9

CROSS-REFERENCE INDEXES
FIGURE AND ITEM NUMBER INDEX

FIG.	ITEM	STOCK NUMBER	CAGEC	PART NUMBER
6	24	5975-00-727-5153	96906	MS3367-4-9
6	25	5970-00-812-2969	81349	M23053/5-104-0
6	26		81349	37TB 18B
6	27		96906	MSA37TB18
6	28		97403	13229E5823
6	29		81349	M45938/1-13C
7	1	5305-00-054-6671	96906	MS51957-46
7	2	5310-00-225-5328	96906	MS15795-841
7	3	5310-00-933-8119	96906	MS35338-137
7	4		60177	11500
8	1	6210-00-753-2289	81349	LH80/1
8	2		81349	LC21CD3
8	3		81349	W-L-101/130
8	4	5970-00-740-2971	81349	M23053/5-107-9
8	5	6145-01-042-4621	81349	M22759/16-20-9
8	6	6210-00-900-9423	97403	13214E1391
8	7		83330	181-0931-001
8	8		58224	G9B
8	9	6210-01-230-1851	72619	181-8836-09-553
9	1		97403	13229E5764-2
9	2	5940-00-813-0698	96906	MS25036-101
9	3	5970-00-088-2975	81349	M23053/5-104-9
9	4	6145-00-578-6602	81349	M5086/2-18-9
9	5	6210-00-900-9423	97403	13214E1391
9	6		83330	181-0931-001
9	7		58224	G9B
9	8	6210-01-230-1851	72619	181-8836-09-553
10	1		81349	TBJA
10	2		96906	MS27407-3
10	3		96906	MS24524-30
11	1	5320-00-582-3305	96906	MS20600AD4W3
11	2	5340-00-975-2126	96906	MS18015-1
11	3		97403	13229E5819-3
11	4	5310-00-934-9759	96906	MS35649-284
11	5	5310-00-933-8119	96906	MS35338-137
11	6	5310-00-225-5328	96906	MS 15795-841
11	7	5305-00-054-6671	96906	MS51957-46
11	8		97403	13229E5649-1
11	9		97403	13229E5728-1
11	10		96906	MS20600AD3W3
11	11		81349	M24768/2-S-7
11	12		81349	M24768/2-S-7
11	13		81349	M24768/2-S-7
11	14		97403	13229E5654-1
11	15		97403	13229E5654-2
11	16		97403	13229E9630
12	1	5310-00-989-5945	96906	MS35691-35
12	2	5310-00-042-4229	96906	MS35333-113
12	3		96906	MS39347-4
12	4	5310-01-012-7400	96906	MS51858-5
12	5		96906	MS18212-65
12	6	5310-00-1384315	96906	MS51859-5

CROSS-REFERENCE INDEXES
FIGURE AND ITEM NUMBER INDEX

FIG.	ITEM	STOCK NUMBER	CAGEC	PART NUMBER
12	7		97403	13229E5833
12	8		97403	13229E9631
13	1		97403	13229E5828-1
13	2	5940-00-1154996	96906	MS20659-145
13	3	5940-00-557-4338	96906	MS25036-125
13	4		81349	M23053/5-108-4
13	5	6145-00-578-6595	81349	M5086/24-9
13	6		97403	13229E5828-2
13	7	5940-00-115-4996	96906	MS20659-145
13	8	5940-00-557-4338	96906	MS25036-125
13	9		81349	M23053/5-108-4
13	10	6145-00-578-6595	81349	M5086/24-9
13	11		97403	13229E5828-3
13	12	5940-00-115-4996	96906	MS20659-145
13’	13	5940-00-557-4338	96906	MS25036-1 25
13	14		81349	M23053/5-108-4
13	15	6145-00-578-6595	81349	M5086/2-4-93-2
13	16		97403	13229E5828-4
13	17	5940-00-1154996	96906	MS20659-145
13	18		81349	M23053/5-108-4
13	19	6145-00-578-6595	81349	M5086/2-4-9
13	20		97403	13229E5828-5
13	21	5940-00-115-4996	96906	MS20659-145
13	22		81349	M23053/5-108-4
13	23	6145-00-578-6595	81349	M5086/24-9
13	24		97403	13229E5828-6
13	25	5940-00-115-4996	96906	MS20659-145
13	26		81349	M23053/5-108-4
13	27	6145-00-578-6595	81349	M5086/2-4-9
14	1	5310-00-934-9765	96906	MS35650-304
14	2	5310-00-933-8120	96906	MS35338-138
14	3		96906	MS15795-848
14	4	5305-00-059-3663	96906	MS51958-67
14	5		97403	13229E5832-1
14	6	5935-00-1148061	96906	MS90563-3C
14	7		96906	MS90555C32413S
14	8	5999-01-091-3187	81349	M39029/49-331
14	9	5999-00-014-0952	81349	M39029/49-329
14	10		59501	10-33675-36
14	11	5940-00-115-4996	96906	MS20659-145
14	12	5940-00-115-2676	96906	MS20659-143
14	13		81349	M23053/5-108-0
14	14		81349	M23053/5-108-4
14	15	5975-00-074-2072	96906	MS3367-1-9
14	16	6145-00-578-6595	81349	M5086/24-9
14	17	6145-00-578-6594	81349	M5086/2-6-9
15	1		97403	13229E5831
15	2	5940-00-1434793	96906	MS25036-110
15	3	5940-00-283-5280	96906	MS25036-107
15	4	5940-00-660-3633	96906	MS25036-1 55
15	5	5940-00-143-4780	96906	MS25036-108
15	6	5975-00-727-5153	96906	MS3367-4-9

CROSS-REFERENCE INDEXES
FIGURE AND ITEM NUMBER INDEX

FIG.	ITEM	STOCK NUMBER	CAGEC	PART NUMBER
15	7	6145-01-044-8799	81349	M22759/16-16-9
15	8	5970-00-052-3297	81349	M23053/5-107-4
15	9	5970-00-052-4877	81349	M23053/5-105-4
16	1	5310-00-934-9765	96906	MS35650-304
16	2	5310-00-933-8120	96906	MS35338-138
16	3		96906	MS 15795-848
16	4	5305-00-059-3663	96906	MS51958-67
16	5		7E656	JCG-6026
17	1	5310-00-934-9748	96906	MS35649-244
17	2	5310-00-933-8118	96906	MS35338-135
17	3	5305-00-054-5650	96906	MS51957-16
17	4	5310-01-141-6672	88044	AN960-C4
17	5		81349	RER75F2491R
17	6	5970-00-954-1622	81349	M23053/5-105-0
18	1	5310-00-934-9761	96906	MS35649-264
18	2	5305-00-054-6655	96906	MS51957-31
18	3	5940-00-983-6046	81349	37TB5
18	4		81349	MSA37TB5
18	5	5310-00-934-9765	96906	MS35650-304
18	6	5310-00-933-8120	96906	MS35338-138
18	7		96906	MS 15795-848
18	8	5305-00-059-3660	96906	MS51958-64
18	9	5940-00-114-1310	96906	MS25036-119
18	10		81348	QQB575F30T0437
18	11	5305-00-054-6671	96906	MS51 957-46
18	12	5310-00-225-5328	96906	MS15795-841
18	13	5310-00-933-8119	96906	MS35338-1 37
18	14		97403	13229E5822
18	15		97403	13229E5821
18	16		81346	2B2B2C1F2
18	17		96906	MS27130-CR93
19	1	5340-00-066-1235	97403	13211E7541
19	2	4710-00-597-8731	97403	13211 E7542
19	3	4710-00-185-6948	97403	13211E7543
19	4		97403	13211E7544
19	5	5330-00-402-5125	97403	13211E7546
19	6	4730-00-277-5115	88044	AN816-5-4
19	7	5305-00-841-2681	00141	4328
19	8		97401	13200E6363
19	9	5310-00-209-1239	96906	MS35335-60
19	10		97403	13211E7547
19	11		97403	13200E6361
19	12		97403	13211E7548
19	13	5120-01-013-1676	97403	13226E7741
19	14		80244	GGG-H-46,TY1 OCL1
19	15	5975-00-878-3791	15277	FS0216B122-1
19	16		56681	HLP1053A
19	17		OBKK8	GRC 58
19	18	5975-00-924-9927	73616	GRB58
19	19	5999-00-186-3912	04655	70-801074
19	20	5940-00-271-9504	01667	CBA-70
19	21		81348	QQW343C06B1B

CROSS-REFERENCE INDEXES
FIGURE AND ITEM NUMBER INDEX

FIG.	ITEM	STOCK NUMBER	CAGEC	PART NUMBER
19	22	5940-00-1138190	96906	MS26036-122
19	23	5120-01-019-9564	30554	72-2029-1
20	1	5310-00-9843806	96906	MS51922-9
20	1			
20	1	5310-00-252-8748	96906	MS35650-3314
20	1A	5310-00-974-6623	96906	MS35338-140
20	2	5310-00-044-6477	96906	MS51412-25
20	2			
20	2			
20	2	5310-00-625-5756	96906	MS15795-812
20	3	5306-00-226-4825	80204	B1821BH031C075N
20	3	5306-00-226-4827	80204	B1821BH031 C1OON
20	3	5306-00-021-3912	96906	MS35308-334
20	3	5306-00-021-4065	96906	MS35308-338
20	4		97403	13229E7946
20	5	5320-00-753-3830	96906	MS20613-4P5
20	6	5340-00-975-2126	96906	MS18015-1
20	7		96906	MS20427-4C6
20	8	5340-00-234-8422	96906	MS27969-4
21	1	4210-00-202-7858	58536	A-A-1106
21	1A			
21	2	4730-00-908-3194	96906	MS35842-11
21	3		81349	M6000E00200
21	4		96906	MS24519-7
21	5	5310-01-078-5996	96906	MS35425-75
21	6	5310-00-184-8971	96906	MS35338-103
21	7	5310-00-187-2413	88044	AN961-616T
21	8	5310-00-584-7995	96906	MS16203-27
21	9	5940-00-113-8190	96906	MS25036-122
21	10		81348	QQW343C06B 1B4
21	11	5310-00-0228847	96906	MS35333-110
21	12	5307-00-227-1741	97403	13214E1223
21	13		97403	13205E4918
21	14	5320-00-904-4136	81349	M24243/1 B403
21	14	5320-00-052-1972	07707	AD45ABS
21	15		30554	13230E6561
21	15		97403	13229E5666-1
21	15		97403	13229E5666-2
21	16	5310-00-989-0908	96906	MS35691-3
21	17	5310-00-883-9417	96906	MS35338-158
21	18	5310-00-582-5677	96906	MS15795-810
21	19	5940-00-021-3321	96906	MS39347-2
22	1	4210-00-202-7858	58536	A-A-1106
22	2	4730-00-908-3194	96906	MS35842-11
22	3		81349	M6000E00200
22	4		96906	MS24519-7
22	5	5310-01-078-5996	96906	MS35425-75
22	6	5310-00-184-8971	96906	MS35338-103
22	7	5310-00-187-2413	88044	AN961-616T
22	8	5310-00-584-7995	96906	MS 16203-27
22	9	5940-00-113-8190	96906	MS25036-122
22	10		81348	QQW343C06B1B

CROSS-REFERENCE INDEXES
FIGURE AND ITEM NUMBER INDEX

FIG.	ITEM	STOCK NUMBER	CAGEC	PART NUMBER
22	11	5310-00-022-8847	96906	MS35333-110
22	12	5307-00-227-1741	97403	13214E1223
22	13		97403	13205E4918
22	14	5320-00-904-4136	81349	M24243/1B403
22	14A	5320-00-052-1972	07707	AD45ABS
22	15A		30554	13230E6521
22	15		97403	13229E5666-13
22	16	5310-00-989-0908	96906	MS35691-3
22	17	5310-00-883-9417	96906	MS35338-158
22	18	5310-00-582-5677	96906	MS15795-810
22	19	5940-00-021-3321	96906	MS39347-2
23	1	5310-00-087-4652	96906	MS51922-17
23	2	5310-01-257-7590	96906	MS51412-7
23	3	5305-00-068-0510	80204	B1821BH038C100N
23	4		97403	13229E9621-1
23	5		17446	MGLP-R8-10
23	6		30554	13230E6568
23	7		30554	13230E6567-1
23	8		30554	13230E6564-1
23	9		30554	13230E6567-2
23	10		30554	13230E6564-2
24	1		19099	13229E5650-TLR
24	1A		97403	13229E5825
24	1B		97403	13229E5749-1
24	1C		30554	13230E6565
24	2	5310-00-087-4652	96906	MS51922-17
24	2A			
24	2B	5310-00-245-3612	96906	MS35650-3384
24	2C	5310-00-984-7042	96906	MS35338-141
24	3	5310-01-257-7590	96906	MS51412-7
24	3A		96906	MS51412-27
24	3B	5310-00-802-4701	96906	MS15795-813
24	4	5305-00-543-4372	80204	B1821BH038C075N
24	4A	5305-00-068-0510	80204	B1821BH038C100N
24	4B	5305-00-543-4372	80204	B1821BH038C075N
24	4C	5305-00-680-4262	96906	MS35308-360
24	5	4210-00-223-4857	97403	13214E1235
24	5A			
24	6	5310-00-088-1251	96906	MS51922-1
24	6A			
24	7		96906	MS51412-23
24	7A		96906	MS51412-4
24	7B			
24	8	5305-00-071-2505	80204	B1821BHO25C088N
24	8A	5305-00-068-0508	80204	B1821BHO25C075N
24	9	9905-00-205-2795	96906	MS35387-1
24	10	9905-00-202-3639	96906	MS35387-2
24	11	5305-00-432-4172	96906	MS51861-37
25	1	5310-00-087-4652	96906	MS51922-17
25	2	5310-01-257-7590	96906	MS51412-7
25	3	5305-00-725-2317	80204	B1821BHO38C150N
25	4		97403	13229E5812

CROSS-REFERENCE INDEXES
FIGURE AND ITEM NUMBER INDEX

FIG.	ITEM	STOCK NUMBER	CAGEC	PART NUMBER
25	5		19099	13229E5803
26	1	5310-00-087-4652	96906	MS51922-17
26	2	5305-00-725-2317	80204	B1821BH038C150N
26	3	5310-01-257-7590	96906	MS51412-7
26	4		97403	13229E9622
26	5		19099	13229E9622-3
26	6		97403	13229E9625
26	7		97403	13229E9623
26	8		96906	MS27130-CR68
26	9		97403	13229E9626
26	10		97403	13229E9624
26	11		96906	MS271 30-CR68
26	12	5310-00-763-8901	96906	MS51968-23
26	13		96906	MS51412-13A
26	14		97403	13229E9629-3
26	15		97403	13229E9627
26	16		97403	13229E2308
26	17		97403	13229E9628
27	1	5310-00-087-4652	96906	MS51922-17
27	2	5310-01-257-7590	96906	
27	3	5305-00-068-0511	80204	B1821BH038C125N
27	4		97403	13229E5817
27	5		19099	13229E5817-6
27	6		80204	B1821BH038C600N
27	7		97403	13229E5677
27	8		96906	MS27130-CR68
27	9		97403	13229E5748
27	10		96906	MS27130-CR68
27	11	5310-00-763-8901	96906	MS51968-23
27	12		96906	MS51415-11
27	13		96906	MS51415-13
27	14		97403	13229E9629-4
27	15		97403	13229E5818
28	1	5310-00-087-4652	96906	MS51922-17
28	2		96906	MS51412-27
28	3	5305-00-725-2317	80204	B1821BH038C150N
28	4		97403	13229E9619-1
28	5		88900	22806-000-00
28	6		97403	13229E9620-1
28	7		88900	22806-000-00
28	8		97403	13229E5743-1
28	9	5305-00-638-8920	80204	B1821BH038C225N
28	10		97403	13229E5758
28	11		97403	13229E2308
29	1	5320-00-483-0558	9K475	BOM-R8-8
29	2	5320-01-140-1479	9K475	BOM-R8-10
29	3		30554	13230E6569-1
29	4		30554	13230E6569-2
29	5		17446	MGL100-R6-9
29	6		30554	13230E6527
29	7		30554	13230E6576
29	8		17446	MGLP-R8-10

SECTION IV

CROSS-REFERENCE INDEXES
FIGURE AND ITEM NUMBER INDEX

FIG.	ITEM	STOCK NUMBER	CAGEC	PART NUMBER
29	9		30554	13230E6577
29	10		30554	13230E6526
29	11		30554	13230E6578-1
29	12		30554	13230E6578-2
29	13		17446	MGLP-R8-6
29	14		30554	13230E6571 -1
29	15		30554	13230E6571-2
29	16		17446	MGLP-R8-6
29	17		30554	13230E6582-1
29	18		30554	13230E6582-2
29	19		30554	13230E6579
29	20		30554	13230E6583-1
29	21		30554	13230E6583-2
29	22		30554	13230E6580-1
29	23		30554	13230E6580-2
29	24	5310-00-984-7042	96906	MS35338-141
29	25	5310-00-802-4701	96906	MS15795-813
29	26	5975-00-984-6582	96906	MS3367-1-0
30	1	5310-00-087-4652	96906	MS51 922-17
30	2	5310-01-257-7590	96906	MS51412-7
30	2A		96906	MS51412-27
30	3	5305-00-725-2317	80204	B1821BHO38C150N
30	3	5305-00-068-0511	80204	B1821BH038C125N
30	3A		17446	BOM-R12-8
30	4		97403	13214E1206-1
30	4A		30554	13214E1206-2
30	5	5315-00-839-5822	96906	MS24665-353
30	6	5315-01-162-0143	97403	13214E1209
30	7		96403	13214E1207
30	8	4730-00-172-0049	96906	MS15006-1
30	9	5315-00-838-4584	96906	MS16562-66
30	10		97403	13214E1208-1
30	11		97403	13214E1211
30	12		97403	13214E1210
30	13	2590-01-167-8596	97403	13214E1212-1
31	1	5320-00-052-1972	07707	AD45ABS
31	2		30554	13230E6572
31	3	5320-00-483-0558	17446	BOM-R8-8
31	4		30554	13230E6514
31	5		30554	13230E6524
31	6		97403	13229E5664
31	6A		97403	13229E5824
31	6B		97403	13229E5746-1
31	6C		19207	12450001

APPENDIX G
ILLUSTRATED LIST OF MANUFACTURED ITEMS

G-1 INTRODUCTION.

This appendix includes complete instructions for making items authorized to be manufactured or fabricated at unit maintenance level and direct support maintenance level.

A part number index in alphmmmeric order is provided for cross-referencing the part number of the item to be manufactured to the figure which covers fabrication criteria.

All bulk materials needed for manufacture of an item are listed by part number or specification number in a tabular list on the illustration.

G-2 MANUFACTURED ITEMS PART NUMBER INDEX.

Part Number of Manufactured Item	Applicable Figure
13229E5828	G-1
13229E5829	G-2
13229E5831	G-3
13229E5832	G-4
13229E5836	G-5
22806-000-00	G-6
2B2B2C1F2	G-7

G-3 GENERAL INSTRUCTIONS

The manufacture of items listed above consists of cutting wires to length specified on figures and soldering terminal lugs or connectors on appropriate wires. Use standard shop procedures in the manufacture of these items.

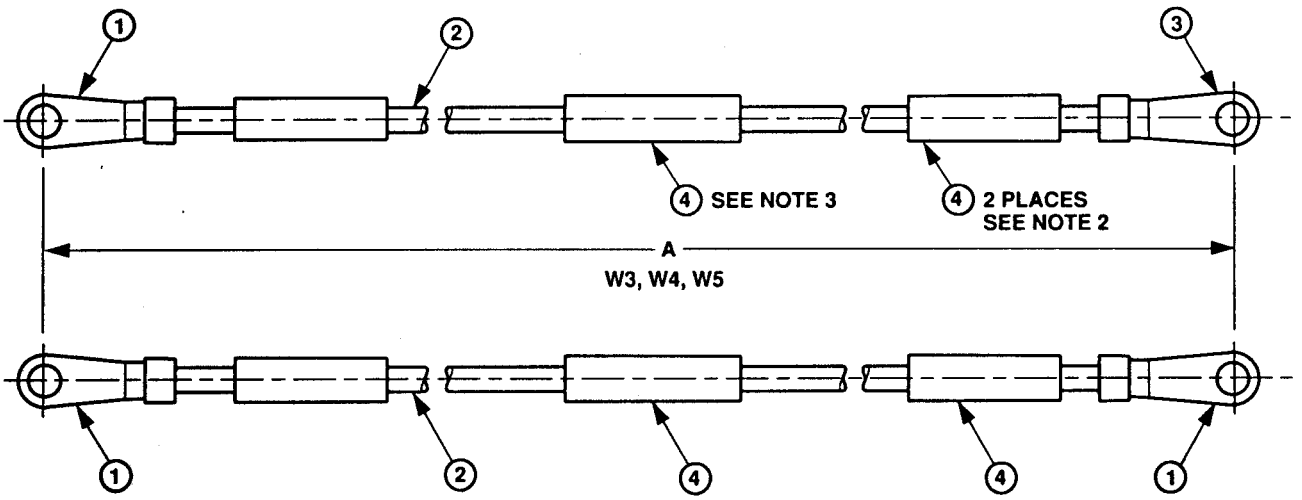

W6, W7, W8

NOTES:

1. CRIMPED CONNECTIONS SHALL BE IN ACCORDANCE WITH MIL-STD-464, REQUIREMENT 19.

2, HOT STAMP LEGEND A, INDICATED IN TABULATION, USING .09-.16 HIGH BLACK CHARACTERS, IN TWO PLACES (180° APART) ON INSULATION SLEEVING, FIND NO. 4, IN ACCORDANCE WITH MIL-M-60903, WITHIN 2.50 INCHES OF TERMINAL LUG.

3. HOT STAMP LEGEND B, INDICATED IN TABULATION, AND "97403-13229E5828- " WITH APPROPRIATE DASH NUMBER ON INSULATION, FIND NO. 4, IN ACCORDANCE WITH MIL-M-60903. LOCATE APPROXIMATELY AT CENTER OF LEAD.

DIMENSIONS

DASH NO.	DIMENSION A +/- 0.50	MARKING	
		LEGEND A	LEGEND B
-1	16.00	K1-A1 - L1	W3
-2	18.00	K1-B1 - L2	W4
-3	23.00	K1-C1 - L3	W5
-4	12.00	K1-C1 - K2-C1	W6
-5	12.00	K1-B1 - K2-B1	W7
-6	12.00	K1-A1 - K2-A1	W8

PARTS LIST

FIND NO.	PART NO.	QUANTITY REQUIRED						DESCRIPTION	SPECIFICATION
		-1	-2	-3	-4	-5	-6		
1	MS25036-125	1	1	1	2	2	2	TERMINAL LUG, 4 AWG, .375 STUD SIZE	
2	M5086/2-4-9	AR	AR	AR	AR	AR	AR	WIRE, ELECTRICAL, 4 AWG, WHT	MIL-W-5086/2
3	MS20659-145	1	1	1	-	-	-	TERMINAL LUG, 4 AWG, .500 STUD SIZE	
4	M23053/5-108-4	-	-	-	2	2	2	INSULATION SLEEVING, HEAT SHRINKABLE, .50 ID AS SUPPLIED X 2.50 LONG	MIL-I-23053/5

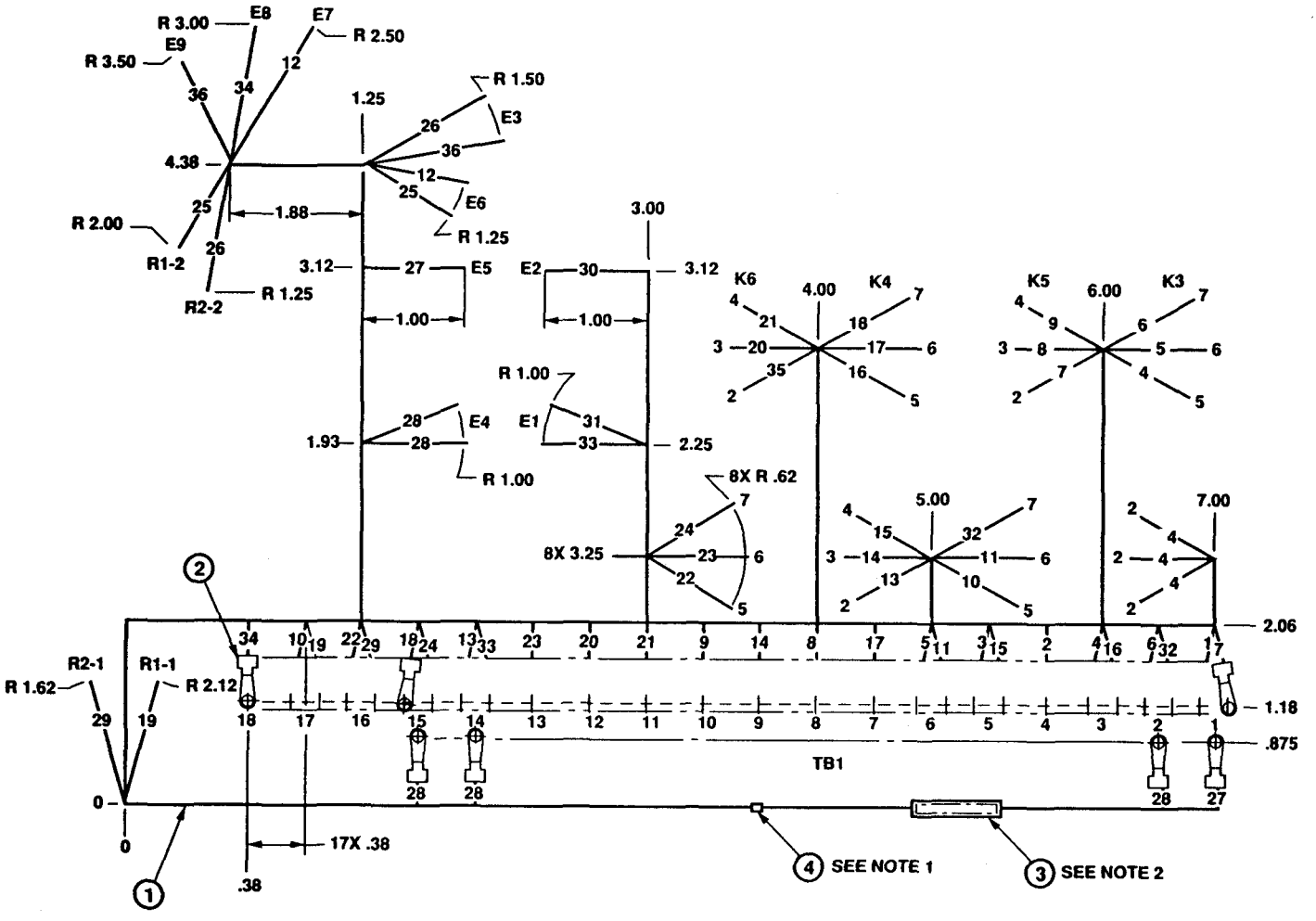

PARTS LIST

FIND NO.	PART NO.	QUANTITY REQUIRED	DESCRIPTION	SPECIFICATION
1	M22759/16-20-9	AR	WIRE, ELECTRICAL, 20 AWG, WHITE	MIL-W-22759/16
2	MS25036-101	31	TERMINAL LUG, CRIMP STYLE, INSULATED, 22-18 TERMINAL SIZE, .138 STUD SIZE	
3	M23053/5-107-4	1	INSULATION SLEEVING, .375 ID X 1.50 L	MIL-I-23053/5
4	MS3367-4-9	AR	STRAP, TIEDOWN	
5	Sn60Pb40	AR	SOLDER	QQ-S-571
6	M23053/5-105-4	70	INSULATION SLEEVING, .187 ID X 1.50 L	MIL-I-23053/5

Figure G-2. Relay Board Harness Assembly W11 (Sheet 1 of 2).

NOTES:

1. BUNDLE WIRE HARNESS AT EACH BREAKOUT AND AT 3.00 MAX INTERVALS USING TIEDOWN STRAP, FIND NO.4.

2. HOT STAMP "97403-13229E5829" lN ACCORDANCE WITH MIL-M-60903 ON SLEEVING FIND NO. 3.

3. EACH WIRE SHALL BE IDENTIFIED BY HOT STAMPING ADDRESS DESIGNATIONS USING .09-.16 HIGH BLACK CHARACTERS ON INSALATION SLEEVING, FIND NO.6, IN ACCORDANCE WITH MIL-M-60903. ATTACH WITHIN TWO INCHES OF BOTH END TERMINATIONS APPROPIATE ADDRESS SHALL CONSIST OF THE FROM TERMINATION, A DOUBLE HEADED ARROW AND THE TO TERMINATION.

4. STRIP AND TIN WIRES IN ACCORDANCE WITH MIL-STD-2000, USING SOLDER, FIND NO. 5.

5. CRIMPED CONNECTIONS SHALL BE IN ACCORDANCE WITH MIL-STD-454, REQUIREMENT 19.

WIRE LIST

WIRE NO.	TERMINATION FROM	TERMINATION FROM FIND NO.	TERMINATION TO	TERMINATION TO FIND NO.	WIRE FIND NO.
1	XK3-2		TB1-1	2	1
2	XK3-3		TB1-4	2	1
3	XK3-4		TB1-5	2	1
4	XK3-5		TB1-3	2	1
5	XK3-6		TB1-6	2	1
6	XK3-7		TB1-2	2	1
7	XK5-2		TB1-1	2	1
8	XK5-3		TB1-8	2	1
9	XK5-4		TB1-10	2	1
10	XK5-5		TB1-17	2	1
11	XK5-6		TB1-6	2	1
12	E-7		E-6		1
13	XK4-2		TB1-14	2	1
14	XK4-3		TB1-9	2	1
15	XK4-4		TB1-5	2	1
16	XK4-5		TB1-3	2	1
17	XK4-6		TB1-7	2	1
18	XK4-7		TB1-15	2	1

WIRE NO.	TERMINATION FROM	TERMINATION FROM FIND NO.	TERMINATION TO	TERMINATION TO FIND NO.	WIRE FIND NO.
19	R1-1		TB1-17	2	1
20	XK6-3		TB1-12	2	1
21	XK6-4		TB1-11	2	1
22	XK6-5		TB1-16	2	1
23	XK6-6		TB1-13	2	1
24	XK6-7		TB1-15	2	1
25	R1-2		E-6		1
26	R2-2		E-3		1
27	E-5		TB1-1	2	1
28	E-4		TB1-2	2	1
29	R2-1		TB1-16	2	1
30	E-2		TB1-15	2	1
31	E-1		E-4		1
32	XK5-7		TB1-2	2	1
33	E-1		TB1-14	2	1
34	E-8		TB1-18	2	1
35	XK6-2		TB1-14	2	1
36	E9		E3		1

Figure G-2. Relay Board Harness Assembly W11 (Sheet 2).

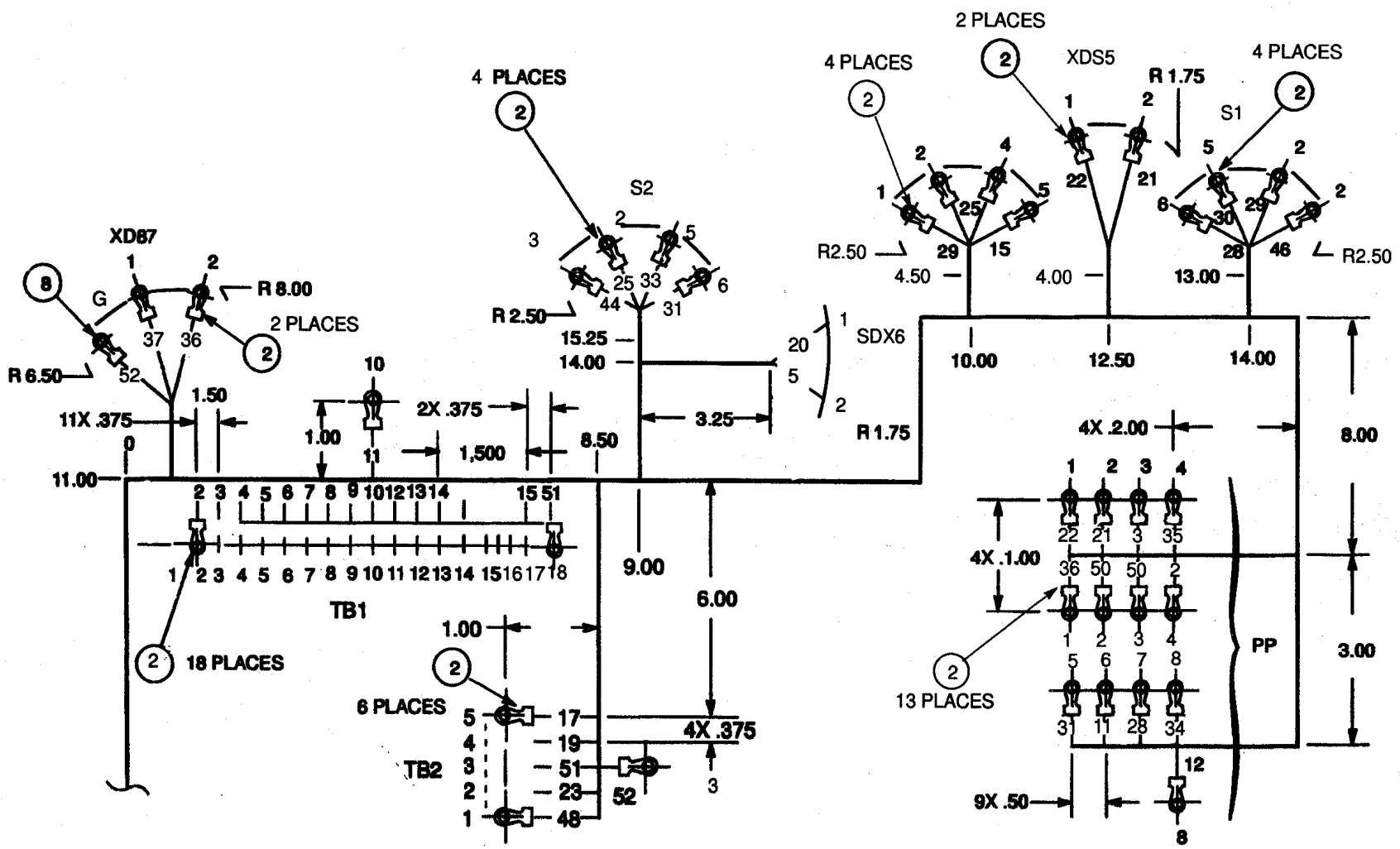

Figure G-3. Swith Box Harness Assembly W9 (Sheet 1 of 4).

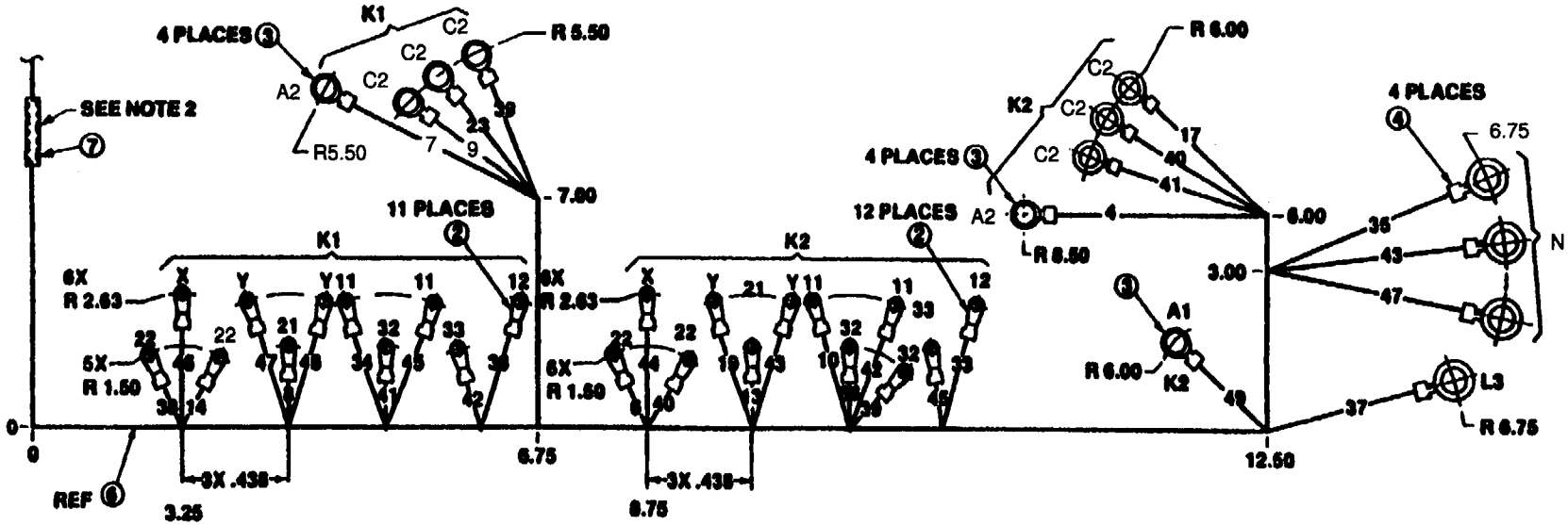

Figure G-3. Swith Box Harness Assembly W9 (Sheet 2 of 4).

PARTS LIST

FIND NO.	PART NO.	QUANTITY REQUIRED	DESCRIPTION	SPECIFICATION
1	M22759/16-16-9	AR	WIRE, ELECTRICAL, 16 AWG, WHITE	MIL-W-22759/16
2	MS25036-107	70	TERMINAL LUG, CRIMP STYLE, INSULATED, 16-14 AWG TERMINAL SIZE, .138 STUD SIZE	
3	MS25036-110	9	TERMINAL LUG, CRIMP STYLE, INSULATED, 16-14 AWG TERMINAL SIZE, .375 STUD SIZE	
4	MS25036-155	4	TERMINAL LUG, CRIMP STYLE, INSULATED, 16-14 AWG TERMINAL SIZE, .500 STUD SIZE	
5	Sn60Pb40	AR	SOLDER	QQ-S-571
6	MS3367-4-9	AR	STRAP, TIEDOWN	
7	M23053/5-107-4	1	INSULATION SLEEVING, .375 ID X 1.50 L	MIL-I-23053/5
8	MS25036-108	1	TERMINAL LUG, CRIMP STYLE, INSULATED, 16-14 AWG TERMINAL SIZE, .190 STUD SIZE	
9	MS23053/5-105-4	104	INSULATION SLEEVING, .187 ID X L AS REQUIRED	MIL-I-23053/5

NOTES:

1. BUNDLE WIRE HARNESS AT EACH BREAKOUT AND AT 3:00 MAX INTERVALS USING TIEDOWN STRAP, FIND NO.4.
2. HOT STAMP "97403-13229E5831" IN ACCORDANCE WITH MIL-M-60903 ON SLEEVING FIND NO 7.
3. EACH WIRE SHALL BE IDENTIFIED BY HOT STAMPING ADDRESS DESIGNATIONS USING .09-.16 HIGH BLACK CHARACTERS ON INSULATION SLEEVING, FIND NO. 9, IN ACCORDANCE WITH MIL-M-60903. ATTACH WITHIN TWO INCHES OF BOTH END TERMINATIONS. APPROPRIATE ADDRESS SHALL CONSIST OF THE FROM TERMINATION, A DOUBLE HEADED ARROW AND THE TO TERMINATION.

   EXAMPLE: TB1-14 ⟷ S10-2

4. STRIP AND TIN WIRES IN ACCORDANCE WITH MIL-STD-2000, USING SOLDER, FIND NO. 5.
5. CRIMPED CONNECTIONS SHALL BE IN ACCORDANCE WITH MIL-STD-454, REQUIREMENT 19.

Figure G-3. Swith Box harness Assembly W9 (Sheet 3).

WIRE LIST

WIRE NO.	TERMINATION FROM	TERMINATION FROM FIND NO.	TERMINATION TO	TERMINATION TO FIND NO.	WIRE FIND NO.
1	TB1-17	2	S10-2	2	1
2	TB1-2	2	PP-4	2	1
3	TB1-3	2	PP-3	2	1
4	TB1-4	2	K2-A2	3	1
5	TB1-5	2	XDS6-2		1
6	TB1-6	2	K2-22	2	1
7	TB1-7	2	K1-A2	3	1
8	TB1-8	2	K1-21	2	1
9	TB1-9	2	K1-C2	3	1
10	TB1-10	2	K2-11	2	1
11	TB1-10	2	PP-6	2	1
12	TB1-11	2	PP-8	2	1
13	TB1-12	2	K2-21	2	1
14	TB1-13	2	K1-22	2	1
15	TB1-16	2	S10-5	2	1
16	-	-	-	-	-
17	K2-5	-	K2-C2	3	1
18	-	-	-	-	-
19	TB2-4	2	K2-Y	2	1
20	XDS6-1	-	R3-1	-	1
21	XDS5-2	-	PP-2	2	1
22	XDS5-1	-	PP-2	2	1
23	TB2-2	2	K1-C2	3	1
24	-	-	-	-	-
25	S2-2	2	S10-4	2	1
26	-	-	-	-	-

WIRE NO.	TERMINATION FROM	TERMINATION FROM FIND NO.	TERMINATION TO	TERMINATION TO FIND NO.	WIRE FIND NO.
27	-	-	-	-	-
28	S1-6	2	PP-7	2	1
29	S1-2	2	S10-1	2	1
30	S1-5	2	K1-12	2	1
31	S2-6	2	PP-5	2	1
32	-	-	-	-	-
33	S2-5	2	K2-12	2	1
34	K1-11	2	PP-8	2	1
35	PP-4	2	N	4	1
36	XDS7-2	-	PP-1	2	1
37	XDS7-1	-	L3	2	1
38	K1-22	2	K2-32	2	1
39	K2-32	2	K1-C2	3	1
40	K2-22	2	K2-C2	3	1
41	K1-32	2	K2-C2	3	1
42	K1-33	2	K2-11	2	1
43	K2-Y	2	N	4	1
44	K2-X	2	S2-3	2	1
45	K2-33	2	K1-11	2	1
46	K1-X	2	S1-3	2	1
47	K1-Y	2	N	4	1
48	K1-Y	2	TB2-1	2	1
49	K2-A1	3	R3-2	-	1
50	PP-2	2	PP-3	2	1
51	TB1-18	2	TB2-3	2	1
52	G	8	TB2-3	2	1

Figure G-3. Switch Box Harness Assembly W9 (Sheet 4).

*U. S. GOVERNMENT PRINTING OFFICE: 1996-755-025/40256

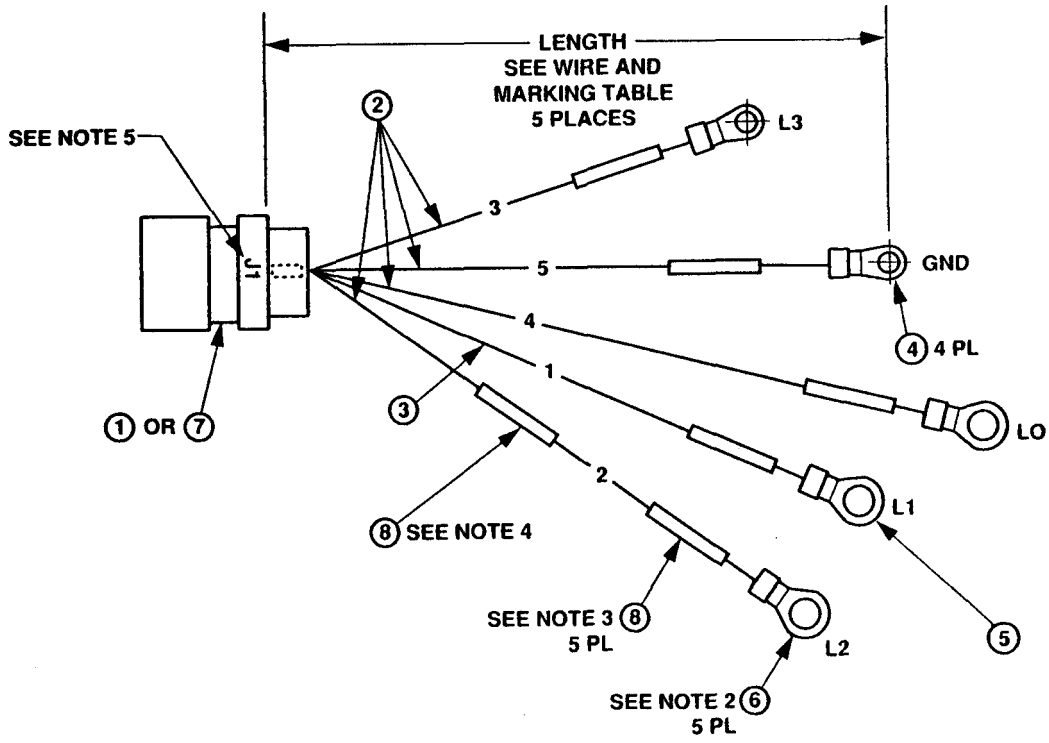

NOTES:

1. CRIMP CONNECTIONS SHALL BE IN ACCORDANCE WITH MILE-45782.

2. INSTALL INSUI.ATION SLEEVING, FIND NO. 6, OVER TERMINALS, FIND NO. 4 AND 5, AND HEAT SHRINK TO A FIRM FIT.

3. HOT STAMP EACH WIRE, WITHIN 2.50 +/- .12 OF TERMIAL, WITH MARKINGS SPECIFIED IN TABULATION. MARKINGS SHALL BE IN ACCORDANCE WITH MIL-M-60903, ON SLEEVING, FIND NO. 8.

4. HOT STAMP "W10" AND "97403-13229E5832-" WITH APPROPRIATE DASH NO. IN ACCORDANCE WITH MTL-M-60903, ON SLEEVING, FIND NO. 8. APPLY SINGLE MARKING APPROXIMATELY CENTERED ON ANYONE WIRE.

5. MARK REFERENCE DESIGNATION IN .12 MIN. HIGH CHARACTERS IN ACCORDANCE WITH MIL-STD-130, METHHOD OPTIONAL.

Figure G-4. Output Connector Harness Assembly W10 (Sheet 1 of 2).

PARTS LIST

FIND NO.	PART NO.	QUANTITY REQUIRED -1	QUANTITY REQUIRED -2	DESCRIPTION	SPECIFICATION
1	MS90555C32413S	1	-	CONNECTOR, RECEPTACLE ELECTRICAL	
2	M5086/2-4-9	AR	AR	WIRE, ELECTRICAL, 4 AWG	MIL-W-5086/2
3	M5086/2-6-9	AR	AR	WIRE, ELECTRICAL, 6 AWG	MIL-W-5086/2
4	MS20659-145	4	4	TERMINAL, 4 AWG, .50 STUD SIZE	
5	MS20659-143	1	1	TERMINAL, 6 AWG, .50 STUD SIZE	
6	M23053/5-108-9	5	5	INSULATION SLEEVING, HEAT SHRINKABLE, .50 MIN ID AS SUPPLIED, 1.00 L	MIL-I-23053/5
7	MS90555C32413SY	1	-	CONNECTOR, RECEPTACLE ELECTRICAL	
8	M23053/5-108-4	6	6	INSULATION SLEEVING, HEAT SHRINKABLE, .50 MIN ID AS SUPPLIED, L AS REQUIRED	

WIRING AND MARKING TABLE

WIRE NO.	FROM	MARKING	LENGTH +.50 -.00
1	J1-A	L1	18.00
2	J1-B	L2	20.00
3	J1-C	L3	22.00
4	J1-N	L0	22.00
5	J1-G	GND	26.00

APPLICATION CODE

DASH NO.	APPLICATION
-1	FOR 60 Hz SYSTEMS
-2	FOR 400 Hz SYSTEMS

Figure G-4. Output Connector Harness Assembly W10 (Sheet 2).

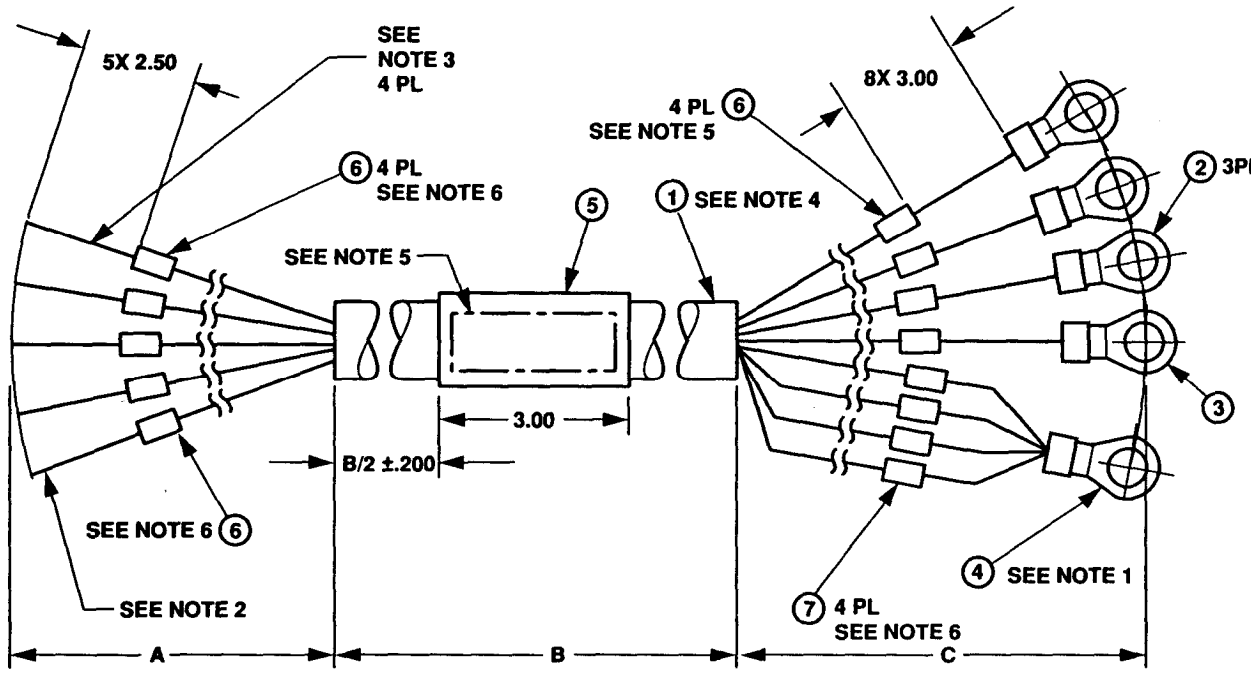

PARTS LIST

FIND NO.	PART NO.	QUANTITY REQUIRED	DESCRIPTION	SPECIFICATION
1	CO-04HDE	AR	CABLE, POWER	MIL-C-3432
2	MS25036-125	3	TERMINAL LUG, 4 AWG, .375 STUD SIZE	
3	MS20659-145	1	TERMINAL LUG, 4 AWG, .500 STUD SIZE	
4	MS20659-143	1	TERMINAL LUG, 6 AWG, .500 STUD SIZE	
5	M23953/5-111-0	1	INSULATION SLEEVING, HEAT SHRINKABLE, BLK	MIL-I-23053/5
6	M23953/5-107-9	9	INSULATION SLEEVING, HEAT SHRINKABLE, WHT	MIL-I-23053/5
7	M23953/5-105-9	4	INSULATION SLEEVING, HEAT SHRINKABLE, WHT	MIL-I-23053/5
8	Sn60Pb40	AR	SOLDER	QQ-S-571

Figure G-5. Cable Assembly W1 and W2 (Sheet 1 of 3).

NOTES:

1. REMOVE BRAID FROM FOUR GROUND WIRES (12 AWG). TWIST TOGETHER AND INSTALL TERMINAL LUG, FIND NO. 4, AS SHOWN. TERMINAL SHALL BE INSTALLED IN ACCORDANCE WITH MIL-STD-454, REQUIREMENT 19.

2. AT PIGTAIL END OF CABLE, THE FOUR 12 AWG GROUNDING CONDUCTORS SHALL BE TWISTED TOGETHER, STARTING AT THE JACKET. CONDUCTORS SHALL BE SOLDER COATED FOR A LENGTH OF .25 FROM END USING SOLDER, FIND NO. 8.

3. AT PIGTAIL END OF CABLE, EACH INSULATED CONDUCTOR SHALL BE STRIPPED 1.25 FROM END AND HAVE THEIR INDIVIDUAL STRANDS TWISTED TOGETHER. SOLDER COAT FOR A LENGTH OF .12 FROM RND USING SOLDER, FIND NO. 8.

4. INSULATION COLORS, IN ACCORDANCE WITH WIRE LIST, SHALL BE INCLUDED AS PART OF THE ORDERING DATA.

5. HOT STAMP "97403-13228F5836-" WITH APPROPRIATE DASH NO., AND 'W-" IN .23-.39 HIGH CHARACTERS ON INSULATION SLEEVING, FIND NO. 5, IN ACCORDANCE WITH MIL-M-60903.

6. HOT STAMP WITH TERMINAL DESIGNATION, AS SHOWN ON WIRE LIST, USING. 12-.22 HIGH CHARACTERS, IN TWO PIACES APPROXIMATELY 180° APART ON INSULATION SLEEVING, FIND N0.6AND7,IN ACCORDANCE WITH MIL-M-60903.

WIRE LIST - AN/MJQ-35

DASH NO.	WIRE	TERMINATION		TERMINATION		WIRE FIND NO.	DIMENSION			CABLE REF DES
		FROM	FIND NO.	TO	FIND NO.		A	B	C	
-1	BLACK	G1-L1	-	K1-A2	2	1	23.50	76.00	10.00	W1
	RED	G1-L2	-	K1-B2	2	1	25.50	76.00	9.00	
	BLUE	G1-L3	-	K1-C2	2	1	27.50	76.00	8.00	
	WHITE	G1-L0	-	L0	3	1	21.50	76.00	26.50	
	GREEN	G1-GND	-	GND	4	1	24.50	76.00	24.00	
	GREEN	G1-GND	-	GND	4	1	24.50	76.00	24.00	
	GREEN	G1-GND	-	GND	4	1	24.50	76.00	24.00	
	GREEN	G1-GND	-	GND	4	1	24.50	76.00	24.00	
-2	BLACK	G2-L1	-	K2-A2	2	1	14.00	84.00	4.00	W2
	RED	G2-L2	-	K2-B2	2	1	12.00	84.00	4.00	
	BLUE	G2-L3	-	K2-C2	2	1	11.00	84.00	4.00	
	WHITE	G2-L0	-	L0	3	1	11.00	84.00	17.00	
	GREEN	G2-GND	-	GND	4	1	9.00	84.00	14.00	
	GREEN	G2-GND	-	GND	4	1	9.00	84.00	14.00	
	GREEN	G2-GND	-	GND	4	1	9.00	84.00	14.00	
	GREEN	G2-GND	-	GND	4	1	9.00	84.00	14.00	

Figure G-5. ***Cable Assembly W1 and W2 (Sheet 2).***

WIRE LIST - AN/MJQ-36

DASH NO.	WIRE	TERMINATION FROM	TERMINATION FIND NO.	TERMINATION TO	TERMINATION FIND NO.	WIRE FIND NO.	DIMENSION A	DIMENSION B	DIMENSION C	CABLE REF DES
-3	BLACK	G1-L1	-	K1-A2	2	1	23.50	42.00	10.00	W1
	RED	G1-L2	-	K1-B2	2	1	25.50	42.00	9.00	
	BLUE	G1-L3	-	K1-C2	2	1	27.50	42.00	8.00	
	WHITE	G1-L0	-	L0	3	1	21.50	42.00	26.50	
	GREEN	G1-GND	-	GND	4	1	24.50	42.00	24.00	
	GREEN	G1-GND	-	GND	4	1	24.50	42.00	24.00	
	GREEN	G1-GND	-	GND	4	1	24.50	42.00	24.00	
	GREEN	G1-GND	-	GND	4	1	24.50	42.00	24.00	
-4	BLACK	G2-L1	-	K2-A2	2	1	14.00	35.00	4.00	W2
	RED	G2-L2	-	K2-B2	2	1	12.00	35.00	4.00	
	BLUE	G2-L3	-	K2-C2	2	1	11.00	35.00	4.00	
	WHITE	G2-L0	-	L0	3	1	11.00	35.00	17.00	
	GREEN	G2-GND	-	GND	4	1	9.00	35.00	14.00	
	GREEN	G2-GND	-	GND	4	1	9.00	35.00	14.00	
	GREEN	G2-GND	-	GND	4	1	9.00	35.00	14.00	
	GREEN	G2-GND	-	GND	4	1	9.00	35.00	14.00	

WIRE LIST - AN/MJQ-35A

DASH NO.	WIRE	TERMINATION FROM	TERMINATION FIND NO.	TERMINATION TO	TERMINATION FIND NO.	WIRE FIND NO.	DIMENSION A	DIMENSION B	DIMENSION C	CABLE REF DES
-5	BLACK	G1-L1	-	K1-A2	2	1	14.00	70.00	3.50	W1
	RED	G1-L2	-	K1-B2	2	1	12.00	70.00	3.00	
	BLUE	G1-L3	-	K1-C2	2	1	11.00	70.00	3.50	
	WHITE	G1-L0	-	L0	3	1	11.00	70.00	18.50	
	GREEN	G1-GND	-	GND	4	1	9.00	70.00	18.00	
	GREEN	G1-GND	-	GND	4	1	9.00	70.00	18.00	
	GREEN	G1-GND	-	GND	4	1	9.00	70.00	18.00	
	GREEN	G1-GND	-	GND	4	1	9.00	70.00	18.00	
-6	BLACK	G2-L1	-	K2-A2	2	1	14.00	20.00	3.50	W2
	RED	G2-L2	-	K2-B2	2	1	12.00	20.00	3.00	
	BLUE	G2-L3	-	K2-C2	2	1	11.00	20.00	3.50	
	WHITE	G2-L0	-	L0	3	1	11.00	20.00	13.00	
	GREEN	G2-GND	-	GND	4	1	9.00	20.00	18.00	
	GREEN	G2-GND	-	GND	4	1	9.00	20.00	18.00	
	GREEN	G2-GND	-	GND	4	1	9.00	20.00	18.00	
	GREEN	G2-GND	-	GND	4	1	9.00	20.00	18.00	

Figure G-5. Cable Assembly WI and W2 (Sheet 3).

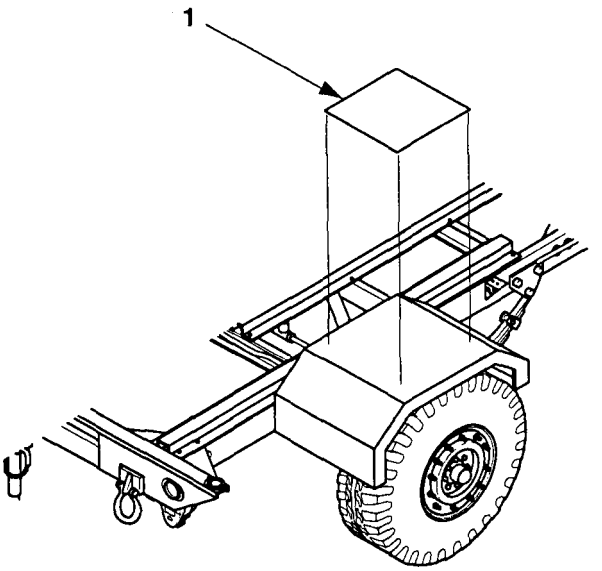

NOTES:

1. Remove old deck covering and clean area.
2. Cut deck covering material (1) to desired length.
3. Remove protective cover horn pressure-sensitive adhesive backing and apply to area to be covered.

PARTS LIST

FIND NO.	PART NO.	QUANTITY REQUIRED	DESCRIPTION	SPECIFICATION
1	22806-000-00	AR	Deck Covering, Lightweight, Nonslip	MIL-D-17951E

Figure G-6. Deck Covering.

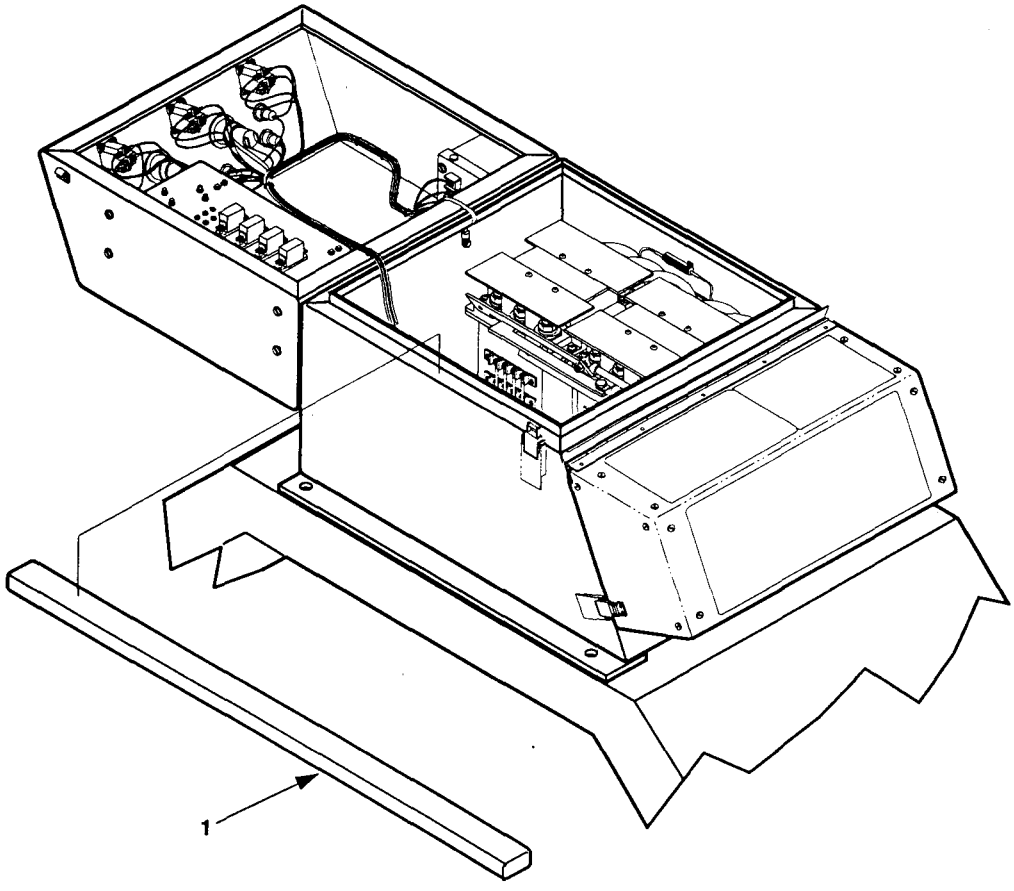

NOTES:

1. Remove damaged gasket material from switch box and clean thoroughly.
2. Measure switch box for required length and cut rubber gasket material (1).
3. Apply Type II adhesive (item 6, appendix E) to switch box and install gasket material.

PARTS LIST

FIND NO.	PART NO.	QUANTITY REQUIRED	DESCRIPTION	SPECIFICATION
1	2B2B2C1F2	AR	Strip, Rubber	ASTM D1056

Figure G-7. Switch Box Gasket.

APPENDIX H
TORQUE LIMITS

SAE Grade Number	1 or 2	5	6 or 7	8
Quality of Material	Indeterminate	Minimum Commercial	Medium Commercial	Best Commercial
Capscrew Head Markings	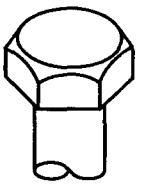	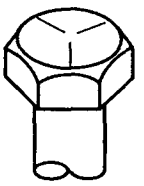		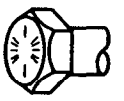

NOTE

Head marking may vary with different manufacturers.

Capscrew Body Size (Inches) - (Thread)		Torque Ft Lb (N.m)		Torque Ft Lb (N.m)		Torque Ft Lb (N.m)		Torque Ft Lb (N.m)	
1/4	20	5	(7)	8	(11)	10	(14)	12	(16)
	28	6	(8)	10	(14)			14	(19)
5/16	18	11	(15)	17	(23)	19	(26)	24	(33)
	24	13	(18)	19	(26)			27	(37)
3/8	16	18	(24)	31	(42)	34	(46)	44	(60)
	24	20	(27)	35	(47)			49	(66)
7/16	14	28	(38)	49	(66)	55	(75)	70	(95)
	20	30	(41)	55	(75)			78	(106)
1/2	13	39	(53)	75	(102)	85	(115)	105	(142)
	20	41	(56)	85	(115)			120	(163)
9/16	12	51	(69)	110	(149)	120	(163)	155	(210)
	18	55	(75)	120	(163)			170	(231)
5/8	11	83	(113)	150	(203)	167	(226)	210	(285)
	18	95	(129)	170	(231)			240	(325)
3/4	10	105	(142)	270	(366)	280	(380)	375	(508)
	16	115	(156)	295	(400)			420	(569)
7/8	9	160	(217)	395	(536)	440	(597)	605	(820)
	14	175	(237)	435	(590)			675	(915)
1	8	235	(319)	590	(800)	660	(895)	910	(1234)
	14	250	(339)	660	(895)			990	(1342

CAUTION

If replacement capscrews are of a higher grade than originally supplied, use torque specifications for that placement. This will prevent equipment damage due to over torquing.

NOTE

Always use the torque values listed above when specific torque values are not available.

APPENDIX I
MANDATORY REPLACEMENT PARTS

Section I. INTRODUCTION

D-1 SCOPE.

This appendix lists all parts used on the high mobility trailer that must be discarded when removed during maintenance and installed new.

D-2 GENERAL.

All mandatory replacement parts are listed by Item Number, Nomenclature, and Part Number.

SECTION II. MANDATORY REPLACEMENT PARTS LIST.

(1) Item Number	(2) Nomenclature	(3) Part Number
1	Washer, Lock (5/16)	MS35338-140
2	Washer, Lock (3/8)	MS35338-141
3	Rivet	AD45ABS
4	Washer, Lock (1/4)	MS35338-158
5	Washer, Lock (1/2)	MS35338-143
6	Rivet, Steel Shank (1/4 .350-.625)	MGLP-R8-10
7	Rivet, Steel Shank (1/4 .080-.375)	MGLP-R8-6
8	Rivet, Blind (1/4 .470-.531)	BOM-R8-8
9	Rivet, Blind (1/4 .595-.656)	BOM-R8-10
10	Rivet, Blind (3/16 .305-.500)	MGL100-R6-9
11	Rivet, Blind (3/8 .438-.562)	BOM-R12-8
12	Strap, Tiedown, Electrical Component	MS-3367-1-0
13	Washer, Lock (3/8)	MS35338-141

GLOSSARY

Section I. ABBREVIATIONS

COMMON ABBREVIATIONS.

The common abbreviations used in this manual are in accordance with MIL-STD-12D.

SPECIAL OR UNIQUE ABBREVIATIONS.

The following are abbreviations and symbols that are used in this manual and not listed in MIL-STD-12D.

AAL ..... additional authorization list
BII ..... basic issue item
BOI ..... basis of issue
°C ..... degrees Celsius
CAGE ..... commercial and government entity
CAGEC ..... commercial and government entity code
conex ..... container express
COEI ..... components of end item
CPC ..... corrosion prevention and control
CTA ..... common table of allowance
CUCV ..... commercial utility cargo vehicle
DOD ..... Department of Defense
EIR ..... equipment improvement recommendation
°F ..... degrees Fahrenheit
HMMWV ..... high mobility multipurpose wheeled vehicle
HMT ..... high mobility trailer
Hz ..... hertz
JTA ..... joint table of allowances
kg ..... kilogram
kPa ..... kilopascals
kph ..... kilometers per hour
kW ..... kilowatt
lbf. ft ..... foot pound-force
m ..... meter (metric measure)
MAC ..... maintenance allocation chart
MTOE ..... modification table of organization and equipment
NIIN ..... national item identification number
Nom ..... newton meter
NSNs ..... national stock numbers
PMCS ..... preventive maintenance checks and services
PPR ..... permissive paralleling relay
RPSTL ..... repair parts and special tools list
SMR ..... source, maintenance, and recoverability
TAMMS ..... The Army Maintenance Management System
TDA ..... table of distribution and allowances
TMDE ..... test, measurement, and diagnostic equipment
UOC ..... usable on code

Section II. DEFINITION OF UNUSUAL TERMS

UNUSUAL TERMS.

The following are terms that are used in this manual and not listed in the Army dictionary (AR 310-25).

None.

INDEX

F

G

H

I

L

M

M - Continued

N

O

O - Continued

P

R

S

S - Continued

T

U

W

*U.S. GOVERNMENT PRINTING OFFICE:1995-655-121/20329

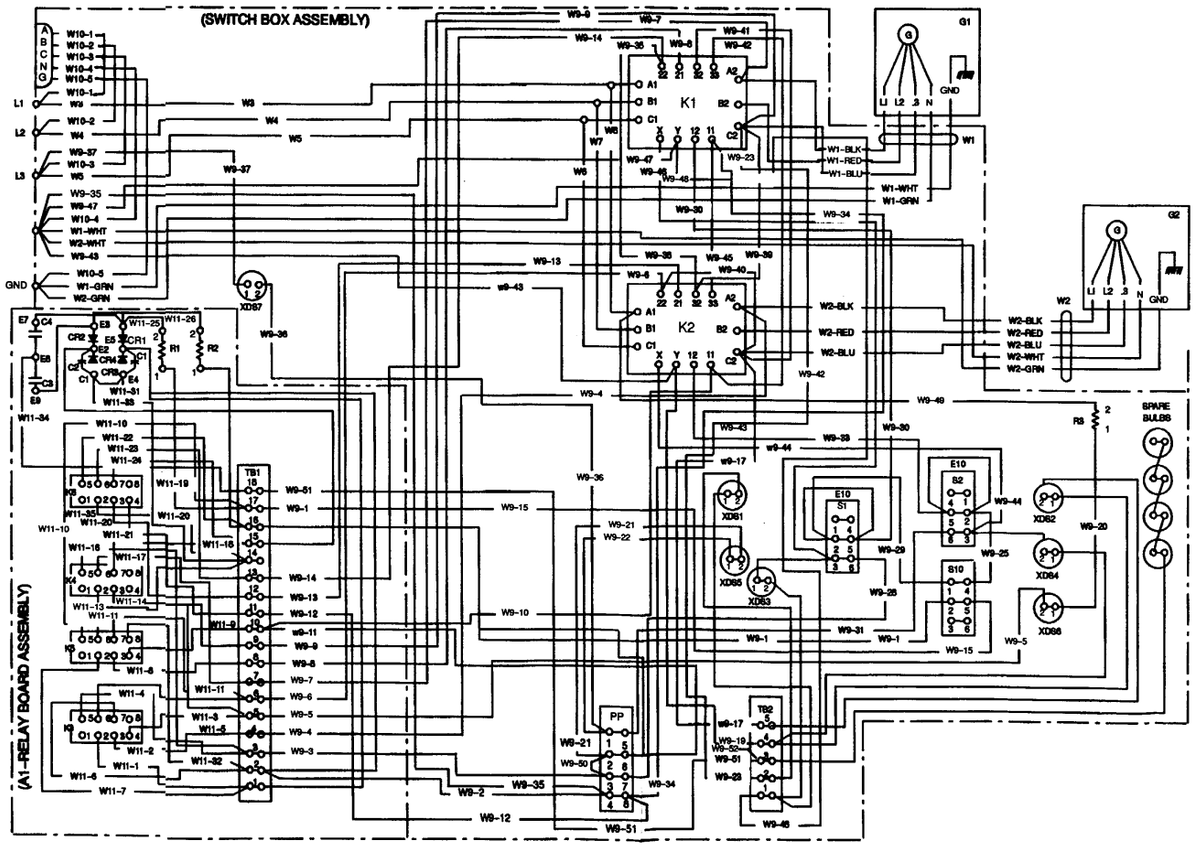

COMPONENT REFERENCE LIST		
REF DES	PART NO.	DESCRIPTION
XDS1-XDS4	13229E5764-2	LIGHT AND WIRE
XDS5-XDS7	LH80/1 (HOUSING) LC22CN3 (LENS) MIL-L-3661/38 AND/22	LAMP HOLDER
DS5-DS7	6S6DC (120) A-A-50452	LAMP, INCANDESENT
E1-E9	M55155/99G03	TERMINAL, STUD
E10	STYLE TBJA MIL-T-55164/28	BUS CONTACTOR
K1, K2	13229E5639	CONTACTOR
K3, K4 K5, K6	M5757/23-003 MIL-R-5757/23	RELAY, DPDT
PP	13229E5653	RELAY, PERMISSIVE, PARALLELING
S1, S2	MS27407-3	SWITCH, TOGGLE
S10	MS24524-30	SWITCH, TOGGLE
G1, G2	SEE TABULATION	SEE TABULATION
LO, L3, GND	MS399347-4	TERMINAL, POST SERVICE AND GROUND
J1	SEE TABULATION	CONNECTOR, RECEPTACLE
R1, R2	RER75F2490P MIL-R-39009/1	RESISTOR
R3	RER75F2491P MIL-R-39009/1	RESISTOR
CR1, CR2, CR3, CR4	JANTX1N5619 MIL-S-19500429	DIODE
XK3-XK6	13222E9886	SOCKET, RELAY
W1	SEE TABULATION	CABLE ASSEMBLY
W2	SEE TABULATION	CABLE ASSEMBLY
W3	13229E828-1	LEAD, ELECTRICAL
W4	13229E828-2	LEAD, ELECTRICAL
W5	13229E828-3	LEAD, ELECTRICAL
W6	13229E5628-4	JUMPER, ELECTRICAL
W7	13229E5628-5	JUMPER, ELECTRICAL
W8	13229E5628-6	LEAD, ELECTRICAL
W9	13229E5831	HARNESS ASSEMBLY, SWITCH BOX
W10	SEE TABULATION	HARNESS ASSEMBLY, OUTPUT CONNECTOR
W11	13229E829	HARNESS ASSEMBLY, RELAY BOARD
A1	13229E830	RELAY BOARD ASSEMBLY
TB1	37TB18B MIL-T-55164/1	TERMINAL BOARD
TB2	37TB5B MIL-T-55164/1	TERMINAL BOARD
C1, C2	M39006/22-0411 MIL-C-39006/22	CAPACITOR
C3, C4	13229E5648	CAPACITOR

Figure FO-1. Power Plant Wiring Diagram.

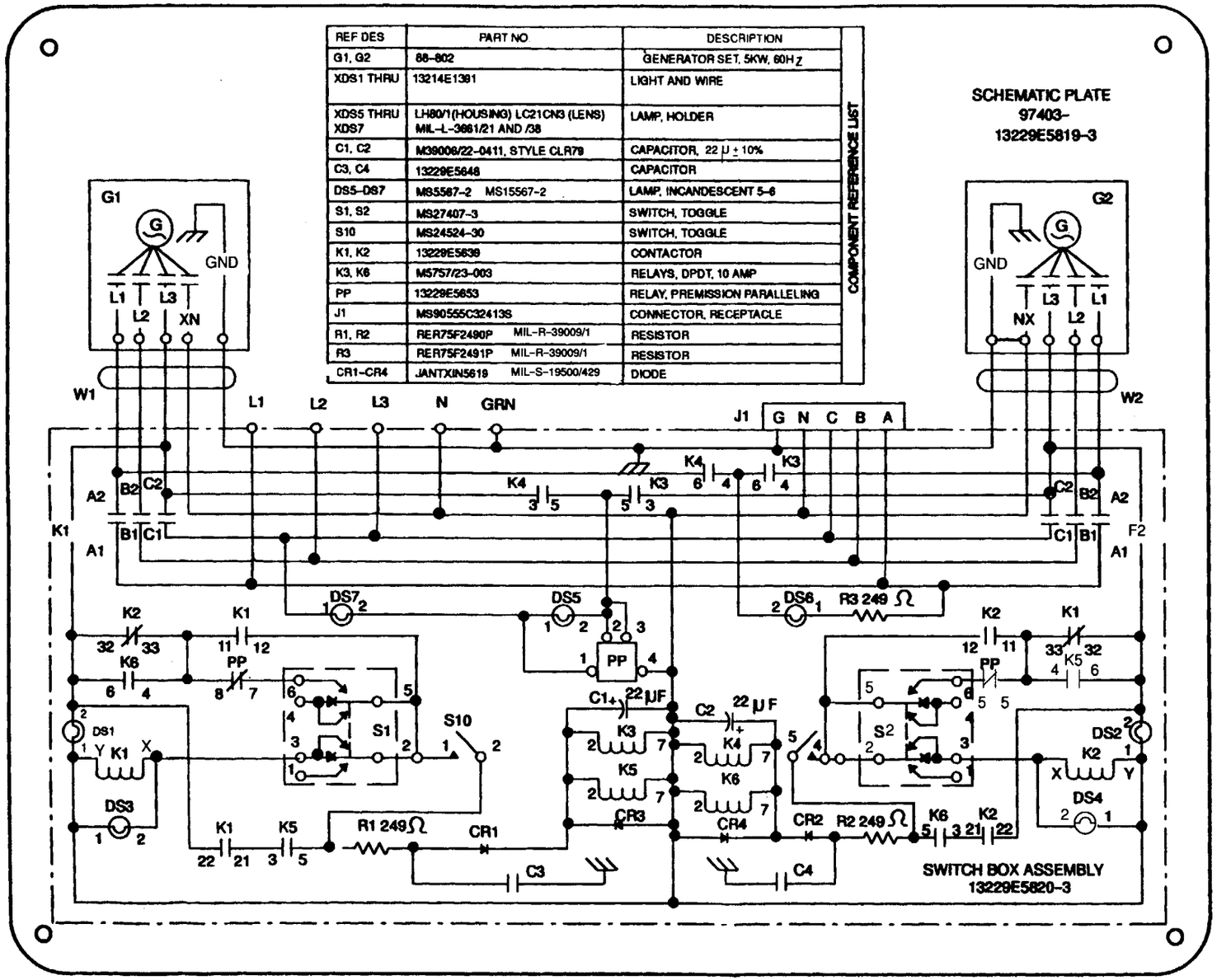

REF DES	PART NO	DESCRIPTION
G1, G2	88-802	GENERATOR SET, 5KW, 60HZ
XDS1 THRU	13214E1381	LIGHT AND WIRE
XDS5 THRU XDS7	LH80/1(HOUSING) LC21CN3 (LENS) MIL-L-3661/21 AND /38	LAMP, HOLDER
C1, C2	M39006/22-0411, STYLE CLR79	CAPACITOR, 22 μ ± 10%
C3, C4	13229E5648	CAPACITOR
DS5-DS7	MS5567-2 MS15567-2	LAMP, INCANDESCENT 5-6
S1, S2	MS27407-3	SWITCH, TOGGLE
S10	MS24524-30	SWITCH, TOGGLE
K1, K2	13229E5639	CONTACTOR
K3, K6	M5757/23-003	RELAYS, DPDT, 10 AMP
PP	13229E5653	RELAY, PREMISSION PARALLELING
J1	MS90555C32413S	CONNECTOR, RECEPTACLE
R1, R2	RER75F2490P MIL-R-39009/1	RESISTOR
R3	RER75F2491P MIL-R-39009/1	RESISTOR
CR1-CR4	JANTXIN5619 MIL-S-19500/429	DIODE

COMPONENT REFERENCE LIST

FO-2. POWER PLANT SCHEMATIC

By Order of the Secretary of the Army:

GORDON R. SULLIVAN
General, United States Army
Chief of Staff

Official:

MILTON H. HAMILTON
Administrative Assistant to the
Secretary of the Army
05584

DISTRIBUTION:
To be distributed in accordance with DA Form 12-25-E, block no. 6175, requirements for TM 9-6115-659-13&P.

*U.S. GOVERNMENT PRINTING OFFICE: 1993- 555-028/80434

TEAR ALONG PERFORATED LINE

RECOMMENDED CHANGES TO EQUIPMENT TECHNICAL PUBLICATIONS

SOMETHING WRONG WITH THIS PUBLICATION?

FROM: (PRINT YOUR UNIT'S COMPLETE ADDRESS)

DATE SENT

PUBLICATION NUMBER	PUBLICATION DATE	PUBLICATION TITLE

BE EXACT. . .PIN-POINT WHERE IT IS

PAGE NO.	PARA-GRAPH	FIGURE NO	TABLE NO.

IN THIS SPACE TELL WHAT IS WRONG AND WHAT SHOULD BE DONE ABOUT IT:

PRINTED NAME, GRADE OR TITLE, AND TELEPHONE NUMBER

SIGN HERE:

DA FORM 1 JUL 79 2028-2

PREVIOUS EDITIONS ARE OBSOLETE.

P.S.—IF YOUR OUTFIT WANTS TO KNOW ABOUT YOUR RECOMMENDATION MAKE A CARBON COPY OF THIS AND GIVE IT TO YOUR HEADQUARTERS.

The Metric System and Equivalents

Linear Measure

1 centimeter = 10 millimeters = .39 inch
1 decimeter = 10 centimeters = 3.94 inches
1 meter = 10 decimeters = 39.37 inches
1 dekameter = 10 meters = 32.8 feet
1 hectometer = 10 dekameters = 328.08 feet
1 kilometer = 10 hectometers = 3,280.8 feet

Weights

1 centigram = 10 milligrams = .15 grain
1 decigram = 10 centigrams = 1.54 grains
1 gram = 10 decigram = .035 ounce
1 dekagram = 10 grams = .35 ounce
1 hectogram = 10 dekagrams = 3.52 ounces
1 kilogram = 10 hectograms = 2.2 pounds
1 quintal = 100 kilograms = 220.46 pounds
1 metric ton = 10 quintals = 1.1 short tons

Liquid Measure

1 centiliter = 10 milliters = .34 fl. ounce
1 deciliter = 10 centiliters = 3.38 fl. ounces
1 liter = 10 deciliters = 33.81 fl. ounces
1 dekaliter = 10 liters = 2.64 gallons
1 hectoliter = 10 dekaliters = 26.42 gallons
1 kiloliter = 10 hectoliters = 264.18 gallons

Square Measure

1 sq. centimeter = 100 sq. millimeters = .155 sq. inch
1 sq. decimeter = 100 sq. centimeters = 15.5 sq. inches
1 sq. meter (centare) = 100 sq. decimeters = 10.76 sq. feet
1 sq. dekameter (are) = 100 sq. meters = 1,076.4 sq. feet
1 sq. hectometer (hectare) = 100 sq. dekameters = 2.47 acres
1 sq. kilometer = 100 sq. hectometers = .386 sq. mile

Cubic Measure

1 cu. centimeter = 1000 cu. millimeters = .06 cu. inch
1 cu. decimeter = 1000 cu. centimeters = 61.02 cu. inches
1 cu. meter = 1000 cu. decimeters = 35.31 cu. feet

Approximate Conversion Factors

To change	*To*	*Multiply by*	*To change*	*To*	*Multiply by*
inches	centimeters	2.540	ounce-inches	newton-meters	.007062
feet	meters	.305	centimeters	inches	.394
yards	meters	.914	meters	feet	3.280
miles	kilometers	1.609	meters	yards	1.094
square inches	square centimeters	6.451	kilometers	miles	.621
square feet	square meters	.093	square centimeters	square inches	.155
square yards	square meters	.836	square meters	square feet	10.764
square miles	square kilometers	2.590	square meters	square yards	1.196
acres	square hectometers	.405	square kilometers	square miles	.386
cubic feet	cubic meters	.028	square hectometers	acres	2.471
cubic yards	cubic meters	.765	cubic meters	cubic feet	35.315
fluid ounces	milliliters	29,573	cubic meters	cubic yards	1.308
pints	liters	.473	milliliters	fluid ounces	.034
quarts	liters	.946	liters	pints	2.113
gallons	liters	3.785	liters	quarts	1.057
ounces	grams	28.349	liters	gallons	.264
pounds	kilograms	.454	grams	ounces	.035
short tons	metric tons	.907	kilograms	pounds	2.205
pound-feet	newton-meters	1.356	metric tons	short tons	1.102
pound-inches	newton-meters	.11296			

Temperature (Exact)

°F	Fahrenheit temperature	5/9 (after subtracting 32)	Celsius temperature	°C

PIN: 071916-000